Touch Panel MControl 7"/10"

Operating Instructions

5809776/02 EN

The original operating instructions were written in German.

Table of contents

Table of contents

1 Introduction

This technical file contains detailed descriptions on the safe and proper installation, connection, commissioning and monitoring of the product.

It also includes safety instructions and general information about the product.

This technical file is intended solely for specially trained and authorized personnel.

1.1 Manufacturer

The product is manufactured by:

Maschinenfabrik Reinhausen GmbH

Falkensteinstraße 8
93059 Regensburg, Germany
Tel.: (+49) 9 41/40 90-0
Fax: (+49) 9 41/40 90-7001
E-mail: sales@reinhausen.com

Further information on the product and copies of this technical file are available from this address if required.

1.2 Safekeeping

Keep this technical file and all supporting documents ready at hand and accessible for future use at all times.

1.3 Notation conventions

This section contains an overview of the symbols and textual emphasis used.

1.3.1 Hazard communication system

Warnings in this technical file are displayed as follows.

1.3.1.1 Warning relating to section

Warnings relating to sections refer to entire chapters or sections, sub-sections or several paragraphs within this technical file. Warnings relating to sections use the following format:

⚠ WARNING

Type of danger!

Source of the danger and outcome.

- ► Action
- ► Action

1.3.1.2 Embedded warning information

Embedded warnings refer to a particular part within a section. These warnings apply to smaller units of information than the warnings relating to sections. Embedded warnings use the following format:

⚠ DANGER! Instruction for avoiding a dangerous situation.

1.3.1.3 Signal words and pictograms

The following signal words are used:

Signal word	Definition
DANGER	Indicates a hazardous situation which, if not avoided, will result in death or serious injury.
WARNING	Indicates a hazardous situation which, if not avoided, could result in death or serious injury.
CAUTION	Indicates a hazardous situation which, if not avoided, could result in minor or moderate injury.
NOTICE	Indicates measures to be taken to prevent damage to property.

Table 1: Signal words in warning notices

Pictograms warn of dangers:

Pictogram	Definition
	Warning of a danger point
	Warning of dangerous electrical voltage
	Warning of combustible substances
	Warning of danger of tipping
	Warning of danger of crushing

Table 2: Pictograms used in warning notices

1.3.2 Information system

Information is designed to simplify and improve understanding of particular procedures. In this technical file it is laid out as follows:

Important information.

1.3.3 Instruction system

This technical file contains single-step and multi-step instructions.

Single-step instructions

Instructions which consist of only a single process step are structured as follows:

Aim of action

✓ Requirements (optional).

► Step 1 of 1.

⇨ Result of step (optional).

⇨ Result of action (optional).

Multi-step instructions

Instructions which consist of several process steps are structured as follows:

Aim of action

✓ Requirements (optional).

1. Step 1.

   ⇨ Result of step (optional).

2. Step 2.

   ⇨ Result of step (optional).

⇨ Result of action (optional).

1.3.4 Typographic conventions

The following typographic conventions are used in this technical file:

Typographic convention	Purpose	Example
UPPERCASE	Operating controls, switches	ON/OFF
[Brackets]	PC keyboard	[Ctrl] + [Alt]
Bold	Software operating controls	Press **Continue** button
…>…>…	Menu paths	Parameter > Control parameter
Italics	System messages, error messages, signals	*Function monitoring* alarm triggered
[► Number of pages].	Cross reference	[► 41].

Table 3: Typographic conventions

2 Safety

This technical file contains detailed descriptions on the safe and proper installation, connection, commissioning, operation, and monitoring of the product.

- Read this technical file through carefully to familiarize yourself with the product.
- This technical file is part of the product.
- Read and observe the safety instructions provided in this chapter in particular.
- Observe the warnings in this technical file in order to avoid function-related dangers.
- The product is manufactured according to the state of the art. Risks to life and limb of the user or impairment of the product and other material assets may occur during use due to function-related dangers despite this.

2.1 Appropriate use

The product is a device for displaying and operating the web-based visualization system of ISM® devices.

The product is designed solely for use in electrical energy systems and facilities. It may be used in compliance with the requirements and conditions listed in this technical file as well as the warnings in this technical file and the warnings posted on the product. This applies across the entire service life of the product, from delivery to installation and operation through to disassembly and disposal.

The following is considered appropriate use:

- Operate the product in accordance with this technical file, the agreed-upon delivery conditions and the technical data.
- Ensure that all necessary work is performed by qualified personnel only.
- Only use the equipment and special tools included in delivery for the intended purpose and in accordance with the specifications of this technical file.
- Only operate the product in industrial areas. Observe the notices in this technical file regarding electromagnetic compatibility and the technical data.

2.2 Inappropriate use

Use is considered inappropriate if the product is used other than as described in the "Appropriate use [►Section 2.1, Page 10]" section. In addition, observe the following:

- The product is not a protective device. Do not use it to handle safety-related functions.
- Risk of explosion and fire from highly flammable or explosive gases, vapors, or dusts. Do not operate the product in areas at risk of explosion.
- Unauthorized or inappropriate changes to the product may lead to personal injury, material damage and operational faults. Only modify the product after consultation with Maschinenfabrik Reinhausen GmbH.

2.3 Fundamental Safety Instructions

To prevent accidents, disruptions and damage as well as unacceptable adverse effects on the environment, those responsible for transport, installation, operation, maintenance and disposal of the product or parts of the product must ensure the following:

Work area

Untidy and poorly lit work areas can lead to accidents.

- Keep the work area clean and tidy.
- Make sure that the work area is well lit.
- Observe the applicable laws for accident prevention in the relevant country.

Working during operation

The product may only be operated in a sound, operational condition. Otherwise it poses a danger to life and limb.

Explosion protection

Highly flammable or explosive gases, vapors and dusts can cause serious explosions and fire.

- Do not install or operate the product in areas where a risk of explosion is present.

Ambient conditions

To ensure reliable and safe operation, the product must only be operated under the ambient conditions specified in the technical data.

- Observe the specified operating conditions and requirements for the installation location.

Modifications and conversions

Unauthorized or inappropriate changes to the product may lead to personal injury, material damage and operational faults.

- Only modify the product after consultation with the manufacturer.

Spare parts

Spare parts not approved by the manufacturer may lead to physical injury, damage to the product and operational faults.

- Only use spare parts approved by the manufacturer.
- Contact the manufacturer.

2.4 Personnel qualification

The person responsible for assembly, commissioning, operation, maintenance and inspection must ensure that the personnel are sufficiently qualified.

Electrically skilled person

The electrically skilled person has a technical qualification and therefore has the required knowledge and experience, and is also conversant with the applicable standards and regulations. The electrically skilled person is also proficient in the following:

- Can identify potential dangers independently and is able to avoid them.
- Is able to perform work on electrical systems.
- Is specially trained for the working environment in which (s)he works.
- Must satisfy the requirements of the applicable statutory regulations for accident prevention.

Electrically trained persons

An electrically trained person receives instruction and guidance from an electrically skilled person in relation to the tasks undertaken and the potential dangers in the event of inappropriate handling as well as the protective devices and safety measures. The electrically trained person works exclusively under the guidance and supervision of an electrically skilled person.

Operator

The operator uses and operates the product in line with this technical file. The operating company provides the operator with instruction and training on the specific tasks and the associated potential dangers arising from improper handling.

Technical Service

We strongly recommend having maintenance, repairs and retrofitting carried out by our Technical Service department. This ensures that all work is performed correctly. If maintenance is not carried out by our Technical Service department, please ensure that the personnel who carry out the maintenance are trained and authorized by Maschinenfabrik Reinhausen GmbH to carry out the work.

Authorized personnel

Authorized personnel are trained by Maschinenfabrik Reinhausen GmbH to carry out special maintenance.

2.5 Personal protective equipment

Personal protective equipment must be worn during work to minimize risks to health.

- Always wear the personal protective equipment required for the job at hand.
- Never wear damaged personal protective equipment.
- Observe information about personal protective equipment provided in the work area.

Personal protective equipment to be worn at all times

	**Protective clothing** Close-fitting work clothing with a low tearing strength, with tight sleeves and with no protruding parts. It mainly serves to protect the wearer against being caught by moving machine parts.
	**Safety shoes** To protect against falling heavy objects and slipping on slippery surfaces.

Special personal protective equipment for particular environments

	**Safety glasses** To protect the eyes from flying parts and splashing liquids.
	**Visor** To protect the face from flying parts and splashing liquids or other dangerous substances.
	**Hard hat** To protect from falling and flying parts and materials.
	**Hearing protection** To protect from hearing damage.
	**Protective gloves** To protect from mechanical, thermal, and electrical hazards.

Observe the following recommendations for the secure operation of the product.

General

- Ensure that only authorized personnel have access to the device.
- Only use the device within an ESP (electronic security perimeter). Do not connect the device to the Internet in an unprotected state.
- Ensure that the device is only operated by trained personnel who are familiar with IT security.

Commissioning

Observe the following recommendations for device commissioning:

- Activate the SSL setting; this will secure communication to the server over the SSL/TLS protocol.
- Activate the SSL warning setting. This ensures that the authenticity of the server is verified.
- Utilize the ability to import your own certificates. This ensures seamless verification of the server authenticity.
- Connect the device to a central log server by using the syslog interface.

Operation

Observe the following recommendations during device operation:

- Change the administrator password at regular intervals.
- Stay abreast of security updates.

Interfaces

The device uses the following interfaces for communication:

- ETH0
- ETH1

4 Product description

This chapter contains an overview of the design and function of the product.

4.1 Scope of delivery

The following components are included in the scope of delivery:

- MControl 7" or MControl 10" touch panel
- Mounting brackets
- Cap rail adapter (optional)
- Technical files

Please note the following:

- Check the shipment for completeness on the basis of the shipping documents.
- Store the parts in a dry place until installation.

4.2 Function description

The product is a device for displaying and operating the web-based visualization system of ISM® devices. You can connect the device with up to 10 ISM® devices over an Ethernet switch and use a menu to select which ISM® device is to be displayed. For proper function, the software (application) of the ISM® device must correspond to version 3.310 or higher.

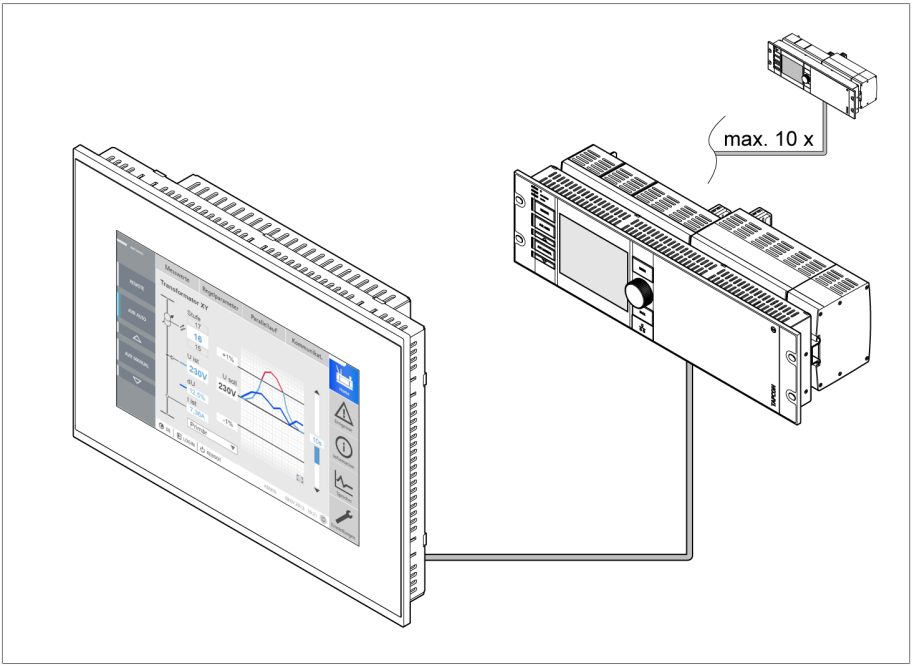

Figure 1: Function description

4.3 Design

The device has a diagonal screen size of 7" (177.8 mm) or 10" (254 mm), depending on the order.

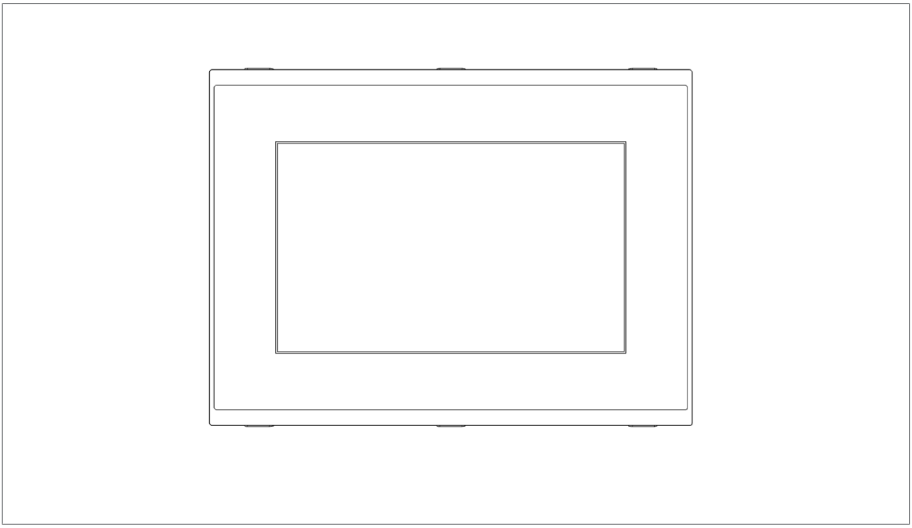

Figure 2: Front view

The device has the following interfaces on the rear for connection:

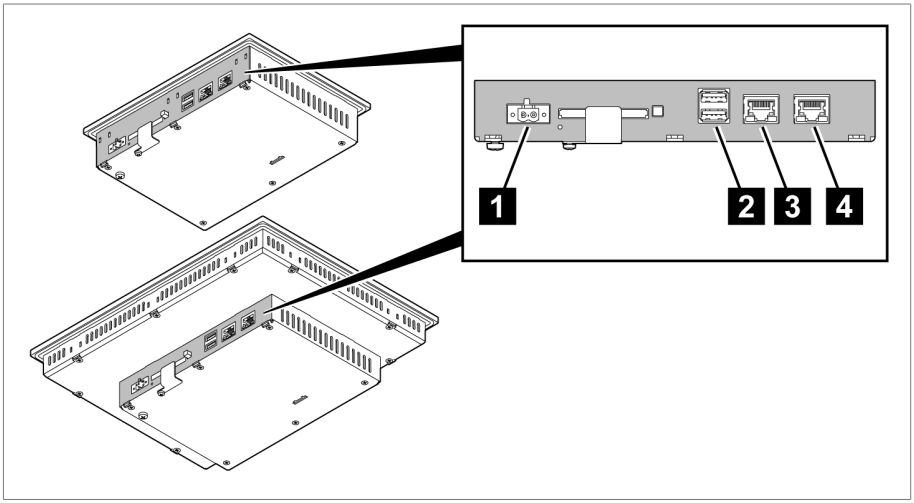

Figure 3: Interfaces

1	Power supply	2	USB interface (2x)
3	ETH0 network interface	4	ETH1 network interface

4.4 Configuration examples

The following examples illustrate the configuration of the interfaces for different device applications.

MControl with ISM® device without its own display (OT1205)

For this application, the device is configured at the plant.

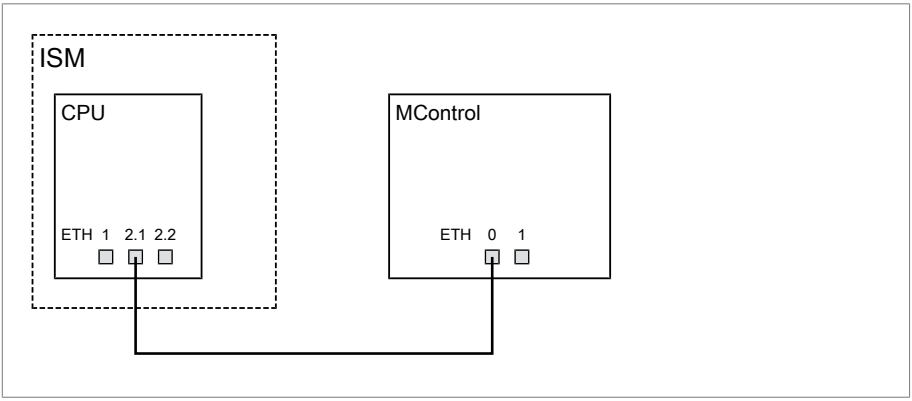

Figure 4: MControl with ISM® device without its own display

Interface	Configuration
ISM-CPU:ETH2.1	IP address: 192.168.165.1 (not adjustable)
MControl (7"): ETH0	IP address: 192.168.165.243 Subnet mask: 255.255.255.0
MControl (10"): ETH0	IP address: 192.168.165.245 Subnet mask: 255.255.255.0

Table 4: Configuration example of the interfaces (factory setting)

MControl with ISM® device with its own display (OT1205)

If you would like to use the device with an ISM® device with its own display, you must use the optional ETH2.2 interface for the ISM® device. You also have to configure the interfaces accordingly.

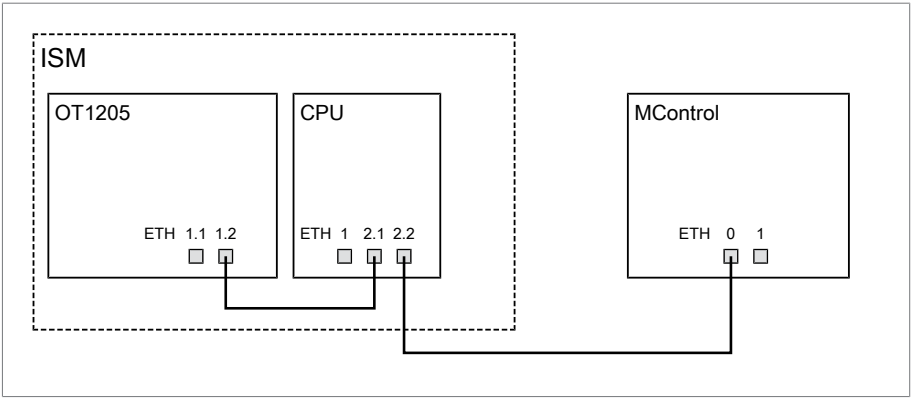

Figure 5: MControl with ISM® device with its own display (OT1205)

Interface	Configuration
ISM-CPU:ETH2.2	IP address: 192.0.1.230 Subnet mask: 255.255.255.0
MControl: ETH0	IP address: 192.0.1.100 Subnet mask: 255.255.255.0

Table 5: Configuration example of the interfaces

MControl with 2 ISM® devices

You can connect up to 2 ISM® devices directly to the device. You must use the optional ETH2.2 interface of the ISM® device and configure the interfaces accordingly.

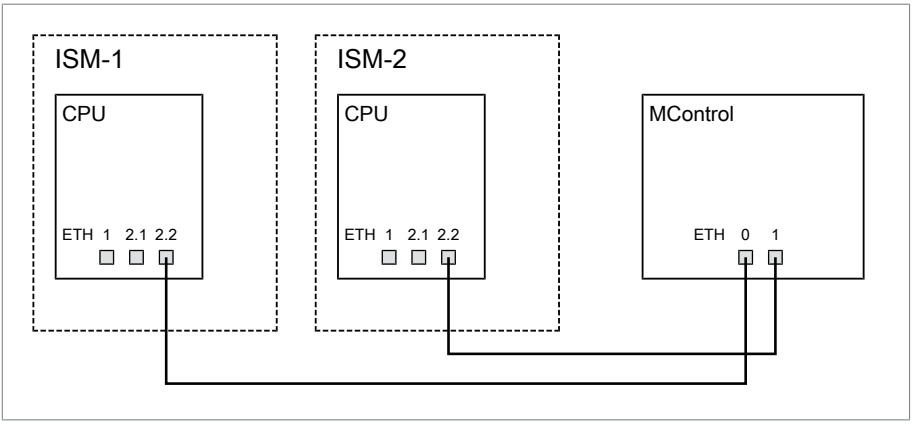

Figure 6: MControl with 2 ISM® devices

Interface	Configuration
ISM1-CPU: ETH2.2	IP address: 192.0.1.230 Subnet mask: 255.255.255.0
ISM2-CPU: ETH2.2	IP address: 192.0.1.231 Subnet mask: 255.255.255.0
MControl: ETH0	IP address: 192.0.1.100 Subnet mask: 255.255.255.0
MControl: ETH1	IP address: 192.0.1.101 Subnet mask: 255.255.255.0

Table 6: Configuration example of the interfaces

MControl with 3 or more ISM® devices

If you would like to use the device with 3 or more ISM® devices, you then require a network switch in addition. You must use the optional ETH2.2 interface of the ISM® device and configure the interfaces accordingly.

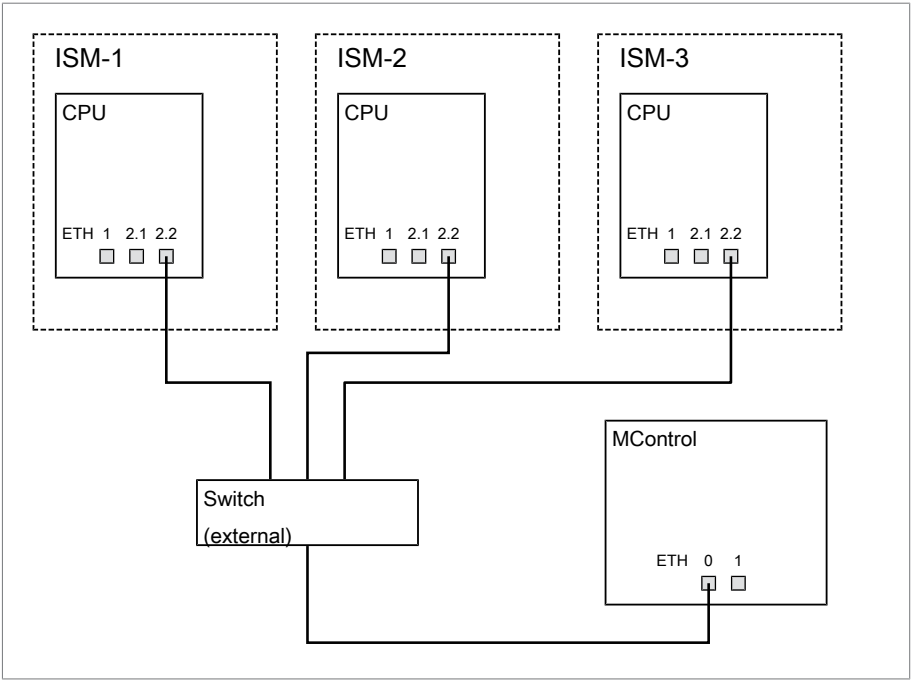

Figure 7: MControl with 3 ISM® devices

Interface	Configuration
ISM1-CPU: ETH2.2	IP address: 192.0.1.230 Subnet mask: 255.255.255.0
ISM2-CPU: ETH2.2	IP address: 192.0.1.231 Subnet mask: 255.255.255.0
ISM3-CPU: ETH2.2	IP address: 192.0.1.232 Subnet mask: 255.255.255.0
MControl: ETH0	IP address: 192.0.1.100 Subnet mask: 255.255.255.0

Table 7: Configuration example of the interfaces

5 Packaging, transport and storage

5.1 Packaging, transport and storage

5.1.1 Suitability, structure and production

The goods are packaged in a sturdy cardboard box. This ensures that the shipment is secure when in the intended transportation position and that none of its parts touch the loading surface of the means of transport or touch the ground after unloading.

The box is designed for a maximum load of 10 kg.

Inlays inside the box stabilize the goods, preventing impermissible changes of position, and protect them from vibration.

5.1.2 Markings

The packaging bears a signature with instructions for safe transport and correct storage. The following symbols apply to the shipment of non-hazardous goods. Adherence to these symbols is mandatory.

	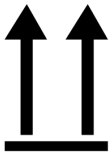			
Protect against moisture	Top	Fragile	Attach lifting gear here	Center of mass

Table 8: Shipping pictograms

5.2 Transportation, receipt and handling of shipments

In addition to oscillation stress, jolts must also be expected during transportation. In order to prevent possible damage, avoid dropping, tipping, knocking over and colliding with the product.

If a crate tips over, falls from a certain height (e.g. when slings tear) or is subject to an unbroken fall, damage must be expected regardless of the weight.

Every delivered shipment must be checked for the following by the recipient before acceptance (acknowledgment of receipt):

- Completeness based on the delivery slip
- External damage of any type

The checks must take place after unloading when the crate or transport container can be accessed from all sides.

Visible damage

If external transport damage is detected on receipt of the shipment, proceed as follows:

- Immediately record the transport damage found in the shipping documents and have this countersigned by the carrier.
- In the event of severe damage, total loss or high damage costs, immediately notify the sales department at Maschinenfabrik Reinhausen and the relevant insurance company.
- After identifying damage, do not modify the condition of the shipment further and retain the packaging material until an inspection decision has been made by the transport company or the insurance company.
- Record the details of the damage immediately onsite together with the carrier involved. This is essential for any claim for damages!
- If possible, photograph damage to packaging and packaged goods. This also applies to signs of corrosion on the packaged goods due to moisture inside the packaging (rain, snow, condensation).
- Be absolutely sure to also check the sealed packaging.

Hidden damage

When damages are not determined until unpacking after receipt of the shipment (hidden damage), proceed as follows:

- Make the party responsible for the damage liable as soon as possible by telephone and in writing, and prepare a damage report.
- Observe the time periods applicable to such actions in the respective country. Inquire about these in good time.

With hidden damage, it is very hard to make the transportation company (or other responsible party) liable. Any insurance claims for such damages can only be successful if relevant provisions are expressly included in the insurance terms and conditions.

5.3 Storage of shipments

When selecting and setting up the storage location, ensure the following:

- Protect stored goods against moisture (flooding, water from melting snow and ice), dirt, pests such as rats, mice, termites and so on, and against unauthorized access.
- Store the crates on timber beams and planks as a protection against rising damp and for better ventilation.
- Ensure sufficient carrying capacity of the ground.
- Keep entrance paths free.
- Check stored goods at regular intervals. Also take appropriate action after storms, heavy rain or snow and so on.

This chapter describes how to correctly install and connect the device. Observe the connection diagrams provided.

⚠ DANGER

Electric shock!

Risk of fatal injury due to electrical voltage. Always observe the following safety regulations when working in or on electrical equipment.

- ► Disconnect the equipment.
- ► Lock the equipment to prevent an unintentional restart.
- ► Make sure all poles are de-energized.
- ► Ground and short-circuit.
- ► Cover or cordon off adjacent energized parts.

NOTICE

Damage to the device!

Electrostatic discharge may cause damage to the device.

- ► Take precautionary measures to prevent the build-up of electrostatic charges on work surfaces and personnel.

6.1 Preparation

Note the following information before you begin mounting the product.

6.1.1 Required tools

The following tools are needed for mounting:

- Flat-head screwdriver (blade width 3.5 mm) for connecting the supply lines
- For mounting in a control panel: hexagon socket wrench (wrench size 2) for attaching the tension clamps
- For mounting on a cap rail: Phillips screwdriver for attaching the cap rail adapter (optional)

6.1.2 Electromagnetic compatibility

The device has been developed in accordance with applicable EMC standards. The following points must be noted in order to maintain the EMC standards.

6.1.2.1 Wiring requirement of installation site

Note the following when selecting the installation site:

- The system's overvoltage protection must be effective.
- The system's ground connection must comply with all technical regulations.
- Separate system parts must be joined by a potential equalization.
- The device and its wiring must be at least 10 m away from circuit-breakers, load disconnectors and busbars.

6.1.2.2 Wiring requirement of operating site

Note the following when wiring the operating site:

- Do not route lines which cause interference (e.g. supply lines) and lines susceptible to interference (e.g. signal lines) in the same cable duct.
- Short-circuit and ground reserve lines.
- Never connect the device with a multi-wire collective pipe.

6.1.2.3 Wiring requirement in control cabinet

Note the following when wiring in the control cabinet:

- The control cabinet where the device will be installed must be prepared in accordance with EMC requirements:
  - Functional division of control cabinet (physical separation)
  - Constant potential equalization (all metal parts are joined)
  - Line routing in accordance with EMC requirements (separation of lines which cause interference and those susceptible to interference)
  - Optimum shielding (metal housing)
  - Overvoltage protection (lightning protection)
  - Collective grounding (main grounding rail)
  - Cable bushings in accordance with EMC requirements
  - Any contactor coils present must be interconnected

- The device's connection cables must be laid in close contact with the grounded metal housing or in metallic cable ducts with a ground connection.
- Signal lines and supply lines / switching lines must be laid in separate cable ducts.
- The device must be grounded at the screw provided using a cable.

6.1.3 Cable recommendation

Please note the following Maschinenfabrik Reinhausen recommendation when wiring the device.

Cable	Cable type	Conductor cross-section	Max. length
Power supply	Unshielded	≥ 0.5 mm²	-
Functional ground	Unshielded	≥ 2.5 mm²	-
Ethernet RJ45	Min. CAT5, shielded S/FTP	-	100 m

Table 9: Cable recommendation

6.1.4 Requirements on the power supply

For the safe operation of the product, observe the following requirements on the power supply:

- Only connect the device to an energy-limited electric circuit in accordance with IEC 61010-1. When doing so, use a miniature fuse: 250 VDC, 2 A, 5 x 20 mm, characteristic "delayed-action". The voltage source must be isolated.
- As an alternative, you may also connect the device to a voltage source that complies with the requirements of NEC class 2 in accordance with UL 1310.

6.2 Mounting the device

NOTICE

Damage to the device!

Insufficient circulation of ambient air can result in damage to the device due to overheating.

- ► Keep the ventilation slots clear.
- ► Ensure are clearance to neighboring components of 40 mm above, below and behind the device.
- ► Only mount the device in a horizontal (landscape) position.

Mounting in a control panel

The device can be mounted in a control panel using tension clamps. The recommended wall thickness is 2...5 mm. To mount the device, proceed as follows:

1. Produce the cut-out in the control panel.

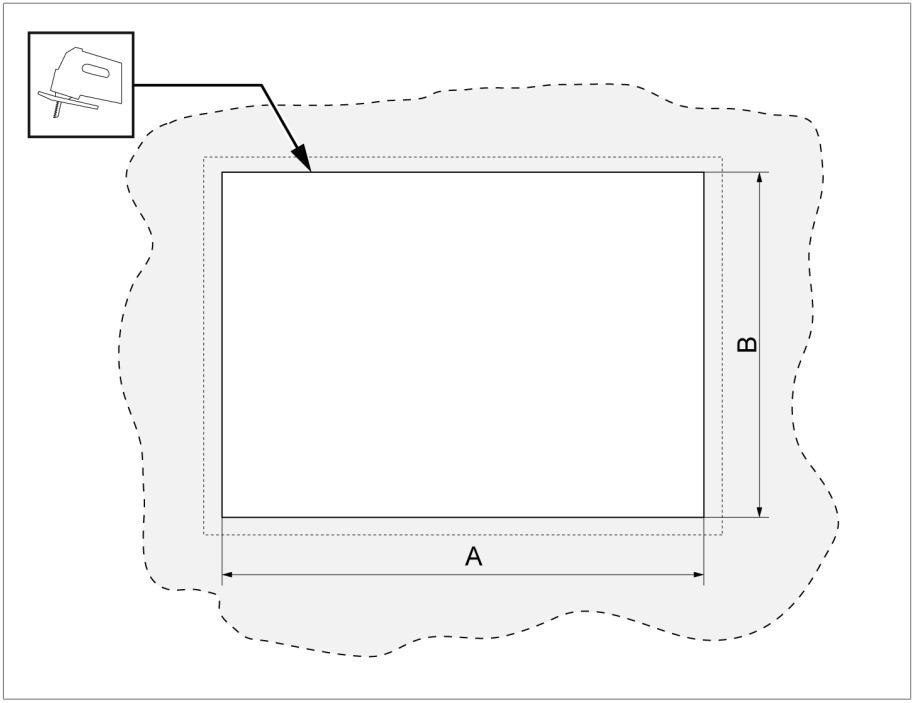

Figure 8: Producing the cut-out in the control panel

MControl 7"	A = 197 mm, B = 141 mm
MControl 10"	A = 283 mm, B = 210 mm

2. Insert the device into the cut-out from the front.

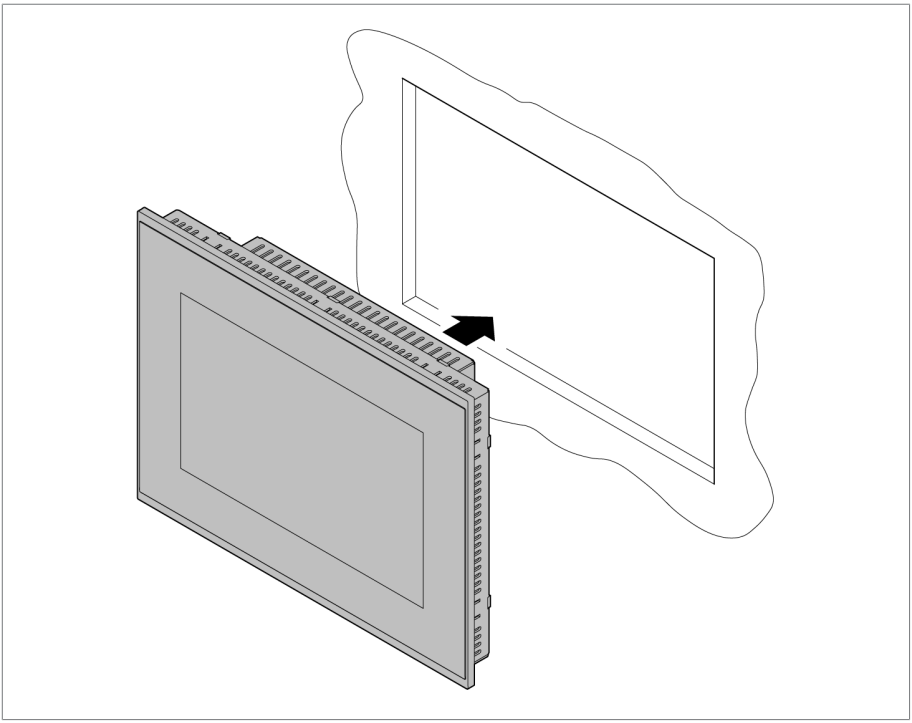

Figure 9: Inserting the device into the cut-out

3. Attach the tension clamps to the device and secure.

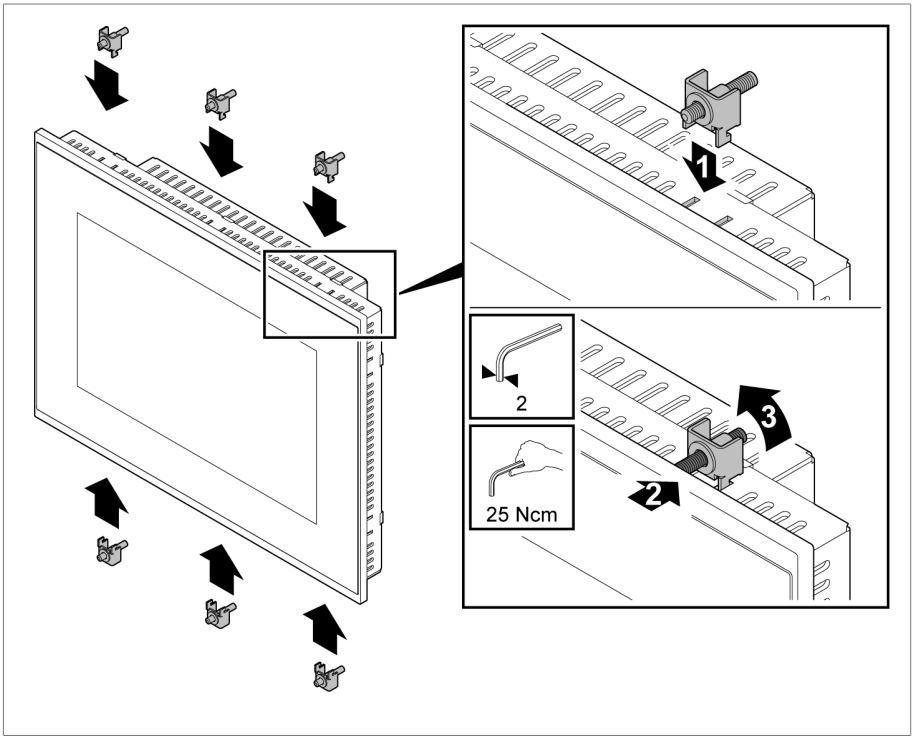

Figure 10: Attaching and securing the tension clamps

Mounting on a cap rail (optional, only MControl 7")

If the device was ordered with the optional cap rail adapter, the device can be attached to a cap rail of the type TH 35-7.5 or TH 35-15 (in accordance with EN 60715).

✓ The cap rail is installed in the control cabinet.

1. Attach the cap rail adapter to the rear of the device.

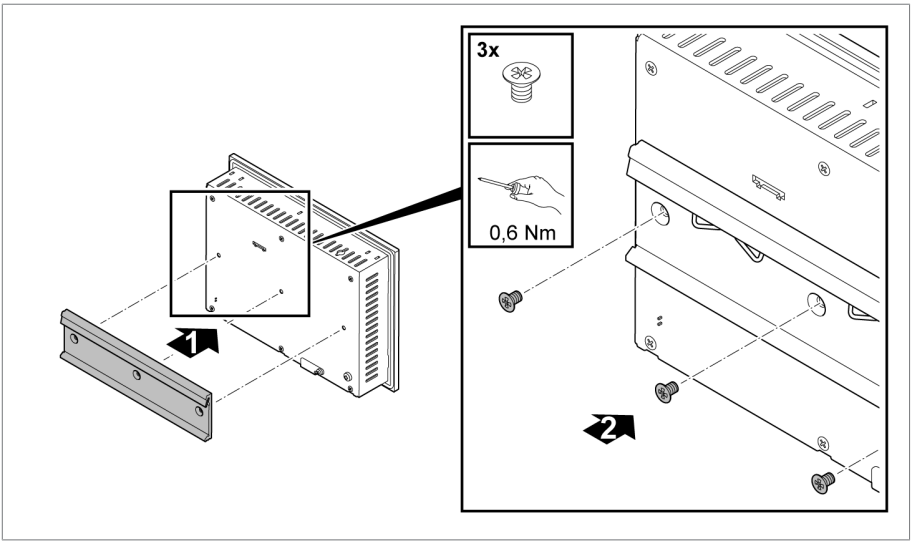

Figure 11: Mounting the cap rail adapter

2. Hook the device onto the cap rail at the specified location, ensuring that the assembly engages correctly.

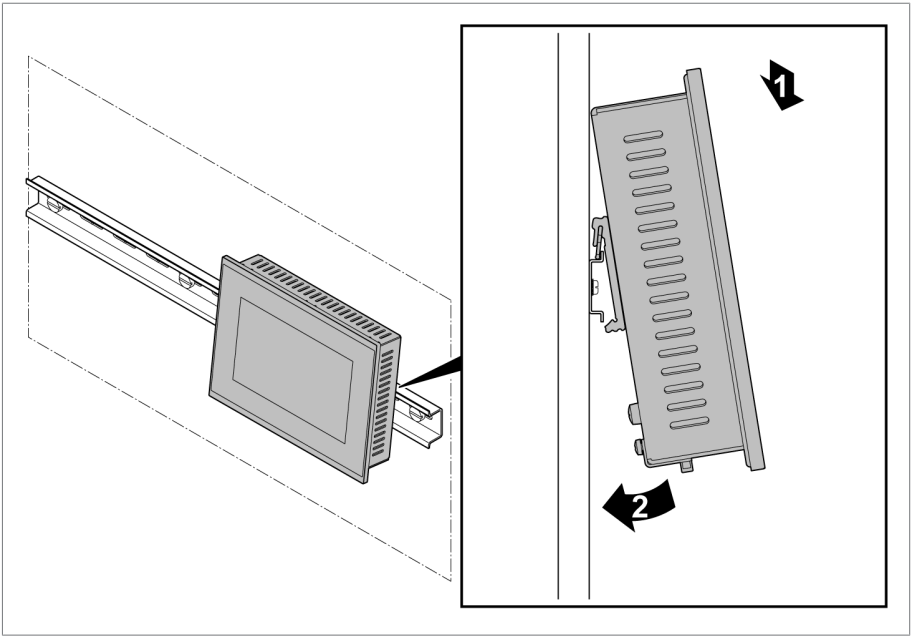

Figure 12: Mounting on a cap rail

6.3 Connecting the device

To connect the device, proceed as follows:

✓ Only use specified cables for connection. Note the cable recommendation [▶Section 6.1.3, Page 29].

1. Connect the network cable to connection ETH0.

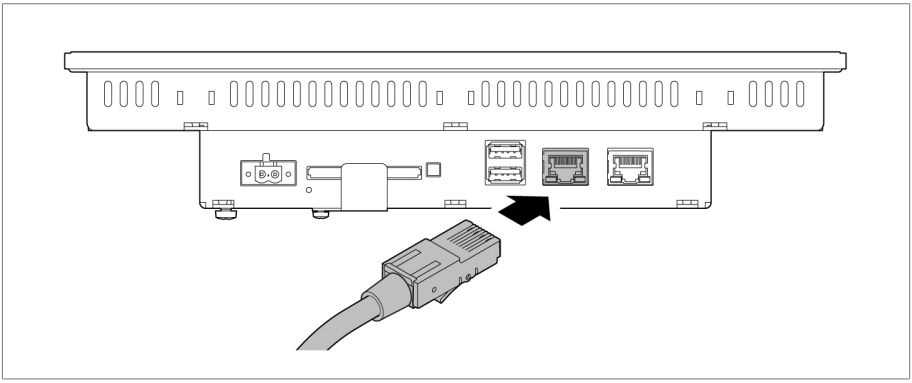

Figure 13: Connecting the network cable

2. Connect the grounding cable to the touch panel and connect it to ground at the installation location (e.g. grounding bar).

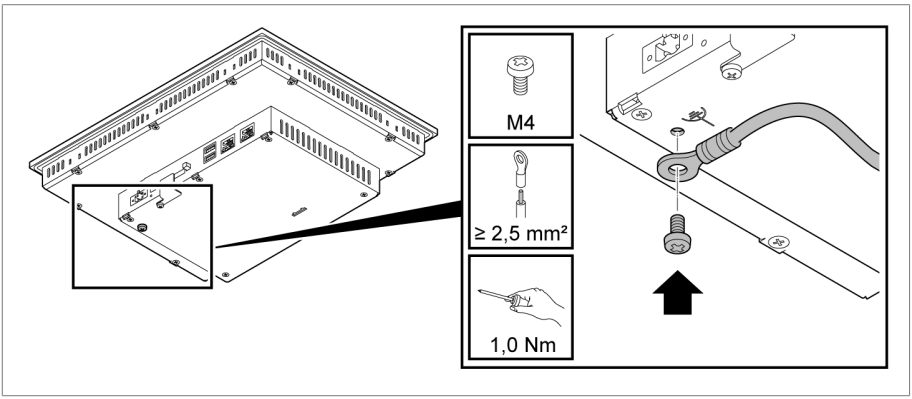

Figure 14: Connecting the functional ground

3. Guide the leads into the plug terminal and fasten them using a screw-driver.

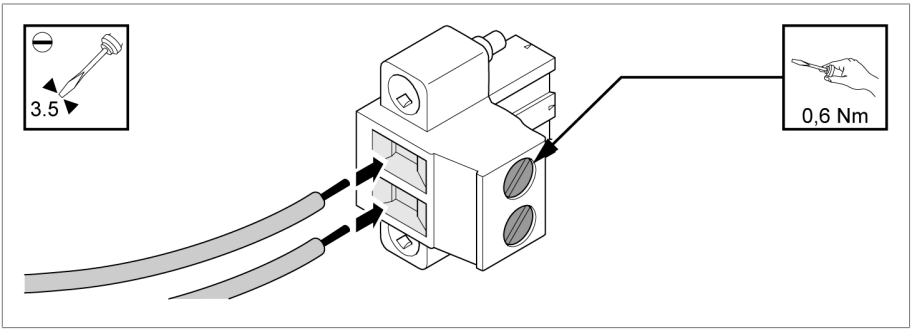

Figure 15: Inserting the leads

4. Connect the power supply.

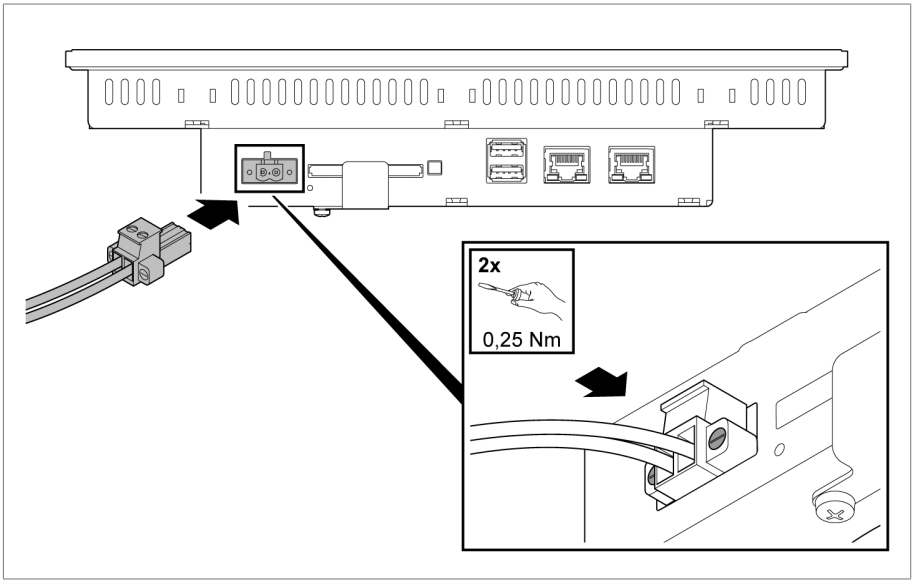

Figure 16: Connecting the power supply

7 Commissioning

To commission the device, proceed as follows:

✓ The device has been mounted and connected.

1. Switch on the power supply.
   ⇨ The device starts up.
2. Set the administrator password.

The default administrator password is `0000`.

3. Configure the network interface of the device [▶Section 8.2.2, Page 43].
4. Set the IP address of the ISM® device [▶Section 8.2.1, Page 42].
5. Leave the menu, or select the desired ISM® device as required.

This chapter describes all the functions and setting options for the device.

8.1 Operation

The device is fitted with a resistive touch screen (MControl 7") or a capacitive touch screen (MControl 10"). You can operate the device with your fingers.

You cannot operate the MControl 10" when wearing gloves.

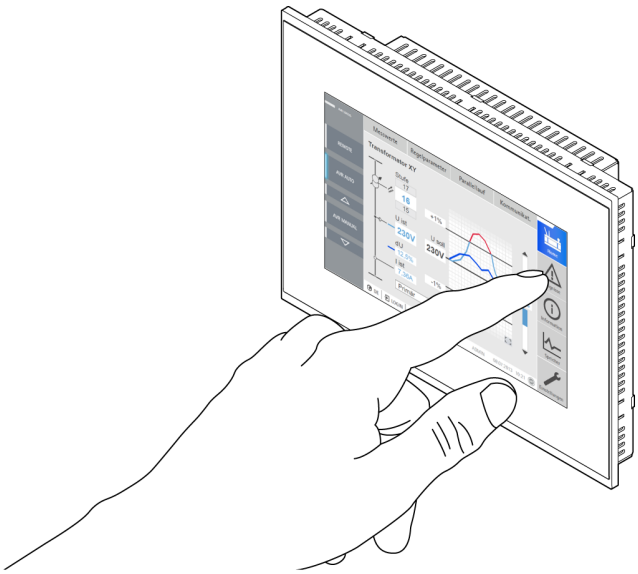

Figure 17: Operation

Calling up the configuration menu

To call up the configuration menu, you have to press any part of the display for longer than three seconds.

Figure 18: Calling up the configuration menu

You must enter the administrator password to be able to change settings. You will be logged out automatically upon leaving the menu or after ten minutes of inactivity.

You will find more information in the section "Configuring the touch panel [▶ Section 8.2, Page 42]".

Selecting a connected ISM device

If you have configured the connection to one or more ISM® device(s), you can call up a selection menu in order to display the desired ISM® device. To do so, proceed as follows:

1. Call up the configuration menu.

2. Go to **Close**.

   ⇨ The selection menu appears.

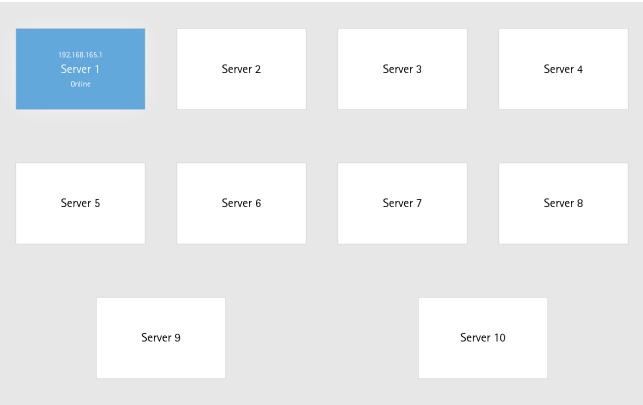

Figure 19: Selection menu

3. Select the desired ISM® device.

On-screen keyboard

An on-screen keyboard is available for entering text and values.

Figure 20: On-screen keyboard

ABC , &123	Toggle between letters and numbers/characters
1/2	Display further characters
	Select keyboard language
	Hide keyboard

Table 10: Additional functions

In order to enter special characters, press and hold the respective letter until a selection dialog appears. Be aware that, depending on the selected keyboard language, some special characters may not be available to you.

Figure 21: Special characters

8.2 Configuring the touch panel

8.2.1 Server

You can configure the connection to the ISM® devices in this menu.

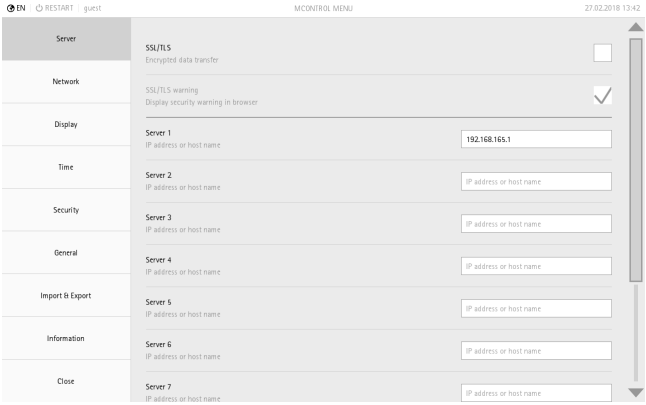

Figure 22: Configuring servers

SSL/TLS

If you activate the SSL option, the connection to the ISM® device is established using SSL/TLS encryption.

SSL/TLS warning

If you activate the SSL/TLS warning option, the display shows a warning message if the SSL/TL connection to the device cannot be authenticated using a trustworthy certificate.

Server 1...10

In the entry fields, you can enter the IP address or the hostname of the ISM® device to which a connection is to be established. You can enter an IP address or host name for a maximum of 10 devices.

8.2.2 Network

You can configure the EHT0 and ETH1 network interfaces of the device in this menu.

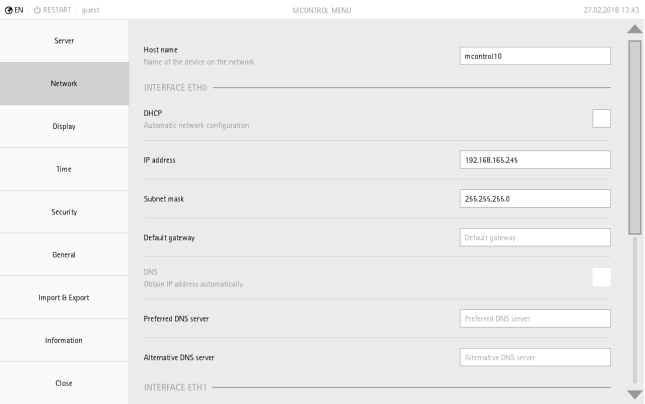

Figure 23: Configuring the network

Host name

You can enter the host name of the device in the entry field.

ETH0/ETH1 interface

You can activate automatic network configuration (DHCP) or set a fixed IP address, subnet mask and standard gateway for the ETH0 and ETH1 interfaces.

DNS

You can set whether the DNS server is to be automatically determined. Alternatively, you can enter a preferred and an alternative DNS server address.

8.2.3 Display

You can configure the display in this menu.

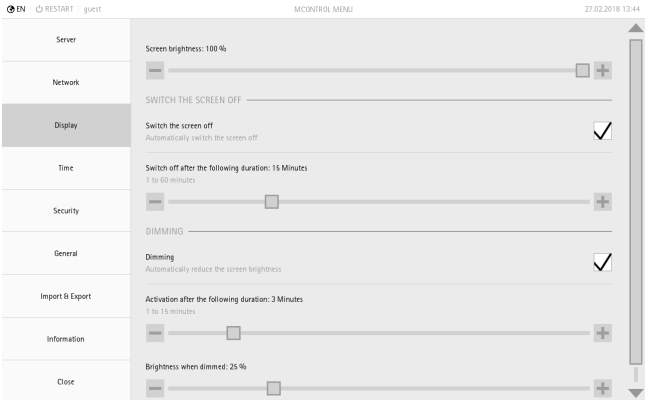

Figure 24: Configuring the display

Screen brightness

You can set the screen brightness as required.

Switching the screen off

You can set whether the screen is to switch off after a certain period of time.

> Deactivating the function "Switch screen off" reduces the service life of the display.

Dimming the screen

You can set whether the screen is to dim after a certain period of time. You can also set the level of brightness to which the screen is to be dimmed.

You can only use the function "Dim screen" if you have activated the function "Switch screen off".

8.2.4 Time

You can set the date and time in this menu.

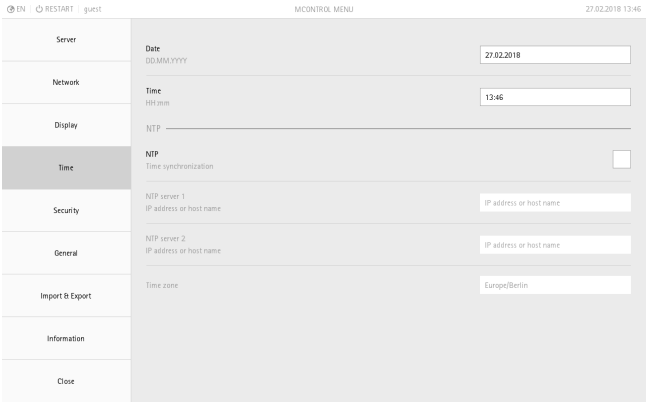

Figure 25: Setting date and time

Setting date and time

You can set the device date and time manually. Alternatively, you can use an NTP time server.

NTP

You can synchronize the device time automatically using an NTP time server. The device must be connected to an NTP time server via Ethernet for this purpose. You can set the following parameters:

- Activating/deactivating NTP
- NTP server 1
- NTP server 2 (optional, in the event of the first time server failing)
- Time zone

8.2.5 Security

You can set the security functions in this menu.

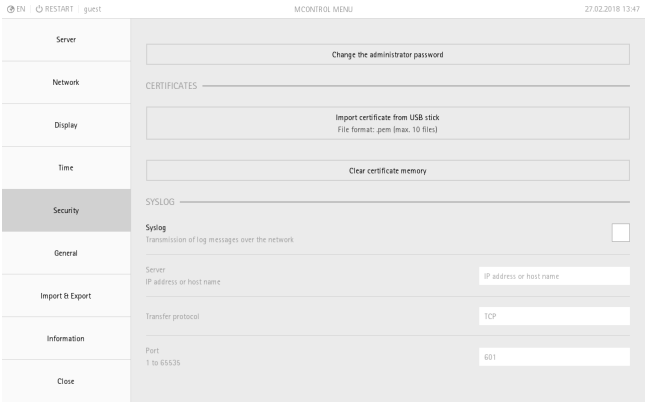

Figure 26: Security

Changing the administrator password

You can change the administrator password.

Certificates

You can import your own certificates for authenticating the SSL/TLS connection. This is necessary, for example, if you use your own certificate for your ISM® device (server). The device supports the import of certificates of the format Base64 (file extension .pem).

You can delete all of your own certificates in the device using the function "Delete certificate memory".

Syslog

You can set whether the device is to send syslog messages to a server. If you activate this option, you must set the server address (IP address or host name), the transfer protocol and the port.

8.2.6 General

You can set the user interface language and reset the device to the default settings in this menu.

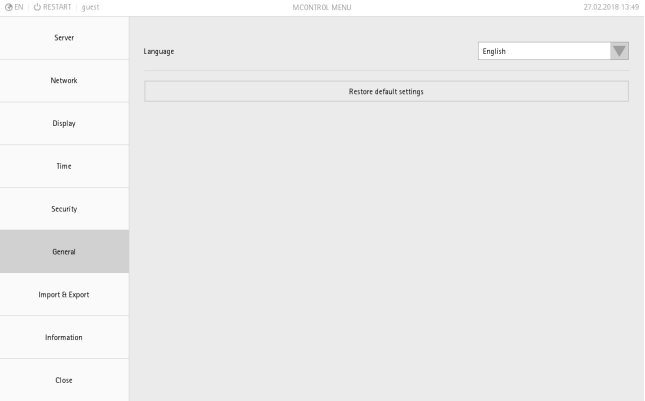

Figure 27: General

8.2.7 Import & Export

You can import a system image and export and import the system settings in this menu.

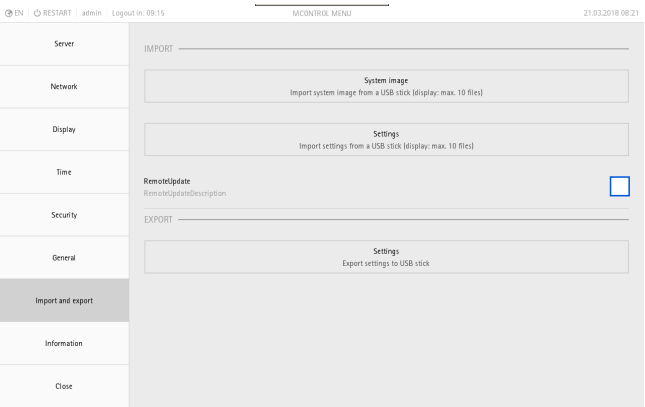

Figure 28: Import & Export

NOTICE

Damage to the file system!

The file system can become damaged due to an incorrect data transmission process. A damaged file system can lead to the device no longer being functional.

- ► Do not disconnect the device from the power supply during the import.
- ► During the import, do not remove the USB stick or disconnect the network connection.

Importing a system image or system settings from a USB stick

To import a system image or system settings from a USB stick, proceed as follows:

✓ Ensure that the USB stick is formatted with the FAT32 file system.

1. Connect the USB stick to the USB port on the device.
2. Call up the configuration menu.
3. Select the menu **Import & Export**.
4. Select **Import system image** or **Import system settings**.
5. Select the desired **file** and confirm with **OK**.
   ⇨ The system image or system settings are imported.

⇨ Restart the device to complete the import procedure.

Exporting system settings to a USB stick

To export system settings to a USB stick, proceed as follows:

✓ Ensure that the USB stick is formatted with the FAT32 file system.

1. Connect the USB stick to the USB port on the device.
2. Call up the configuration menu.
3. Select the menu **Import & Export**.
4. Select **Export system settings**.

⇨ The system settings will be exported.

Importing a system image over a network connection

You can import the system image over the network connection. This requires activating the remote update function. The remote update function supports a connection over the following web browsers:

- Chrome version 64 or higher
- Internet Explorer version 11 (only with deactivated compatibility mode)
- Firefox version 47 or higher
- Opera version 38 or higher

Communication between the device and PC is unencrypted. Only use the remote update function on a secure network.

In order to import the system image over a network connection, proceed as follows:

1. Call up the configuration menu.
2. Select the menu **Import & Export**.
3. Activate the **remote update** option.
4. Enter the IP address of the device in the web browser of your PC (factory setting of MControl 7" ETH0: `192.168.165.243`; MControl 10" ETH0: `192.168.165.245`).
5. Log in as administrator (user name admin, password as defined during commissioning).
6. Select the system image and start the import.
   ⇨ The system image or system settings are imported.

⇨ Restart the device to complete the import procedure.

Restoring the system via USB stick

If the device is faulty, you can perform a system restore using a USB stick. Contact Maschinenfabrik Reinhausen GmbH to receive a USB stick for system restoration.

In order to restore the system using a USB stick, proceed as follows:

✓ The device has been switched off.

1. Plug the USB stick into the device.
2. Switch on the device.

3. Start the system restore.

⇨ The device restarts to complete the system restore.

8.2.8 Information

You can have the system properties displayed via this menu.

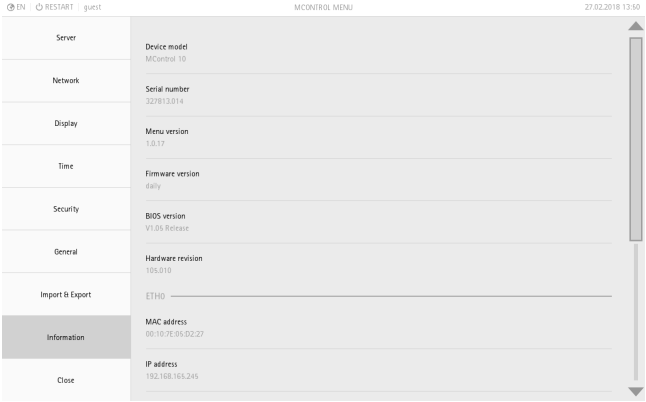

Figure 29: Displaying device information

9 Maintenance and care

The device is maintenance-free. You can clean the device's housing with a dry cloth.

10 Fault elimination

This chapter describes how to rectify simple operating faults.

10.1 General faults

Characteristics/details	Cause	Remedy
No function ▪ Display remains black	No power supply	Check power supply
	Supply voltage is outside of the permitted range	Correct the voltage range
	Internal fuse defective	Contact Maschinenfabrik Reinhausen
	Software error	Contact Maschinenfabrik Reinhausen Perform a system restore via USB stick [▶ Section 8.2.7, Page 47]
Visualization of the connected ISM® device is not displayed	Connection cable defective	Check connection cable
	Network settings incorrect	Check network settings

Table 11: General faults

10.2 Other faults

If you cannot resolve a problem, please contact Maschinenfabrik Reinhausen. Please have the following data on hand:

- Serial number
  - Name plate
  - Info screen
- Software version

Please provide answers to the following questions:

- Has a firmware update been carried out?
- Has there previously been a problem with this device?
- Have you previously contacted Maschinenfabrik Reinhausen about this issue? If yes, then who was the contact?

The following describes the safe removal of the device.

⚠ DANGER

Electric shock!

Risk of fatal injury due to electrical voltage. Always observe the following safety regulations when working in or on electrical equipment.

- ► Disconnect the equipment.
- ► Lock the equipment to prevent an unintentional restart.
- ► Make sure all poles are de-energized.
- ► Ground and short-circuit.
- ► Cover or cordon off adjacent energized parts.

To remove the device, proceed as follows:

1. Disconnect the power supply.
2. Remove the network cable.
3. Remove the grounding cable.
4. If mounted on a cap rail: press the device downwards and remove it from the cap rail.
5. If mounted in a control panel: remove the tension clamps and push the device forwards out of the control panel cut-out.

12 Disposal

Observe the national requirements applicable in the country of use.

13.1 Display

	MControl 7"	MControl 10"
Diagonal	7" (177.8 mm)	10.1" (254 mm)
Resolution	WVGA (800 x 480 pixels)	WXGA (1280 x 800 pixels)
Colors	16.7 million (24-bit)	
Brightness	Typically 450 cd/m²	Typically 400 cd/m²
Viewing angle (horizontal/ vertical)	89°/89°	80°/80°
Touch type	Resistive	Capacitive

Table 12: Display

13.2 Power supply

	MControl 7"/10"
Permissible voltage range	18...34 V DC U_N: 24 V DC Residual ripple U_{pp}: ≤ 2.4 V
Power consumption	Max. 20 W

Table 13: Power supply

Interface

Interface	Pin	Description
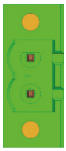	1	+24 VDC (+)
	2	Ground (-)

Table 14: Interface for the power supply

13.3 System networking

	MControl 7"/10"
Interfaces	2x USB 2x Ethernet (IEEE 802.3 with 10/100BaseTX) 1x CFast

Table 15: System networking

Interfaces

Interface	Pin	Description
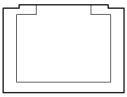	1	A_TD+
	2	A_TD-
	3	B_RD+
	4	C_BI+
	5	C_BI-
	6	B_RD-
	7	D_BI+
	8	D_BI-

Table 16: ETH0, ETH1

Interface	Pin	Description
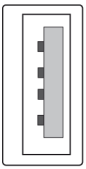	1	VCC
	2	D-
	3	D+
	4	GND

Table 17: USB 2.0

Interface	Protocol	Port	Description
ETH0	TCP	22	SSH (service access)
ETH0	TCP	443	HTTPS (customer access for remote update)

Interface	Protocol	Port	Description
ETH1	TCP	22	SSH (service access)
ETH1	TCP	443	HTTPS (customer access for remote update)

Table 18: List of open Ethernet ports

13.4 Ambient conditions

Operating temperature	-25°C...+70°C if mounted vertically -25°C...+60°C if other mounting methods are used
Storage temperature	-40°C...+85°C
Relative humidity	10...95%, non-condensing
Degree of protection	From the front, if mounted in a control panel: IP54 From the rear, or if other mounting methods are used: IP20
Air pressure	Operation: 2000 m above MSL Storage: 3000 m above MSL
UV irradiation	Protect device from direct sunlight
Minimum clearance to other devices / control cabinet	Above/below/behind: 40 mm

Table 19: Permissible ambient conditions

13.5 Dimensions and weight

	MControl 7"	MControl 10"
Width x height x depth	212 mm x 156 mm x 45 mm (8.35 in x 6.14 in x 1.77 in)	298 mm x 225 mm x 53.1 mm (11.73 in x 8.86 in x 2.09 in)
Weight	Approx. 0.85 kg (1.87 lb)	Approx. 1.85 kg (4.08 lb)

Table 20: Dimensions and weight

13.6 Standards and directives

Electromagnetic compatibility

IEC **61000-4-2**	Immunity to electrostatic discharge (ESD) ▪ Contact: ±4 kV ▪ Air: ±8 kV
IEC 61000-4-3	Immunity to high-frequency electromagnetic fields ▪ 10 V/m; 80...3000 MHz; 80% AM
IEC 61000-4-4	Immunity to quick, transient electrical disturbances (burst) ▪ Power supply: 2 kV ▪ Communication interfaces: 1 kV
IEC 61000-4-5	Immunity to impulse voltages (surge) ▪ Power supply: 500 V ▪ Communication interfaces: 1 kV
IEC 61000-4-6	Immunity to conducted disturbances, induced by high-frequency fields ▪ 10 V, 150 kHz...80 MHz, 80% AM
IEC 61000-4-8	Immunity to power frequency magnetic fields ▪ 100 A/m, 50/60 Hz, continuously
IEC 61000-4-9	Immunity to pulse magnetic fields ▪ 1000 A/m, 50/60 Hz, continuously

Table 21: Immunity in accordance with IEC 61000-6-2

CISPR 16-2-1	Procedure for measuring high-frequency emitted interference (radio interference) and immunity - measurement of conducted emitted interference: Class A
CISPR 16-2-3	Procedure for measuring high-frequency emitted interference (radio interference) and immunity - measurement of radiated emitted interference: Class A
CISPR 22 (EN 55022)	Information technology equipment - Radio disturbance characteristics - Limits and methods of measurement: Class A

Table 22: Emitted interference in accordance with IEC 61000-6-4

Environmental durability tests

IEC 60068-2-1	Dry cold - 20°C / 16 hours
IEC 60068-2-2	Dry heat + 70 °C / 16 hours
IEC 60068-2-78	Constant moist heat + 40 °C / 95% / 16 hours

Table 23: Environmental durability tests

Maschinenfabrik Reinhausen GmbH
Falkensteinstrasse 8
93059 Regensburg

+49 (0)941 4090-0
+49(0)941 4090-7001
sales@reinhausen.com

www.reinhausen.com

5809776/02 EN ▪ 04/18

THE POWER BEHIND POWER.