Motor-drive unit
ETOS® TD

Operating Instructions

8127448/00 EN . RMV-II

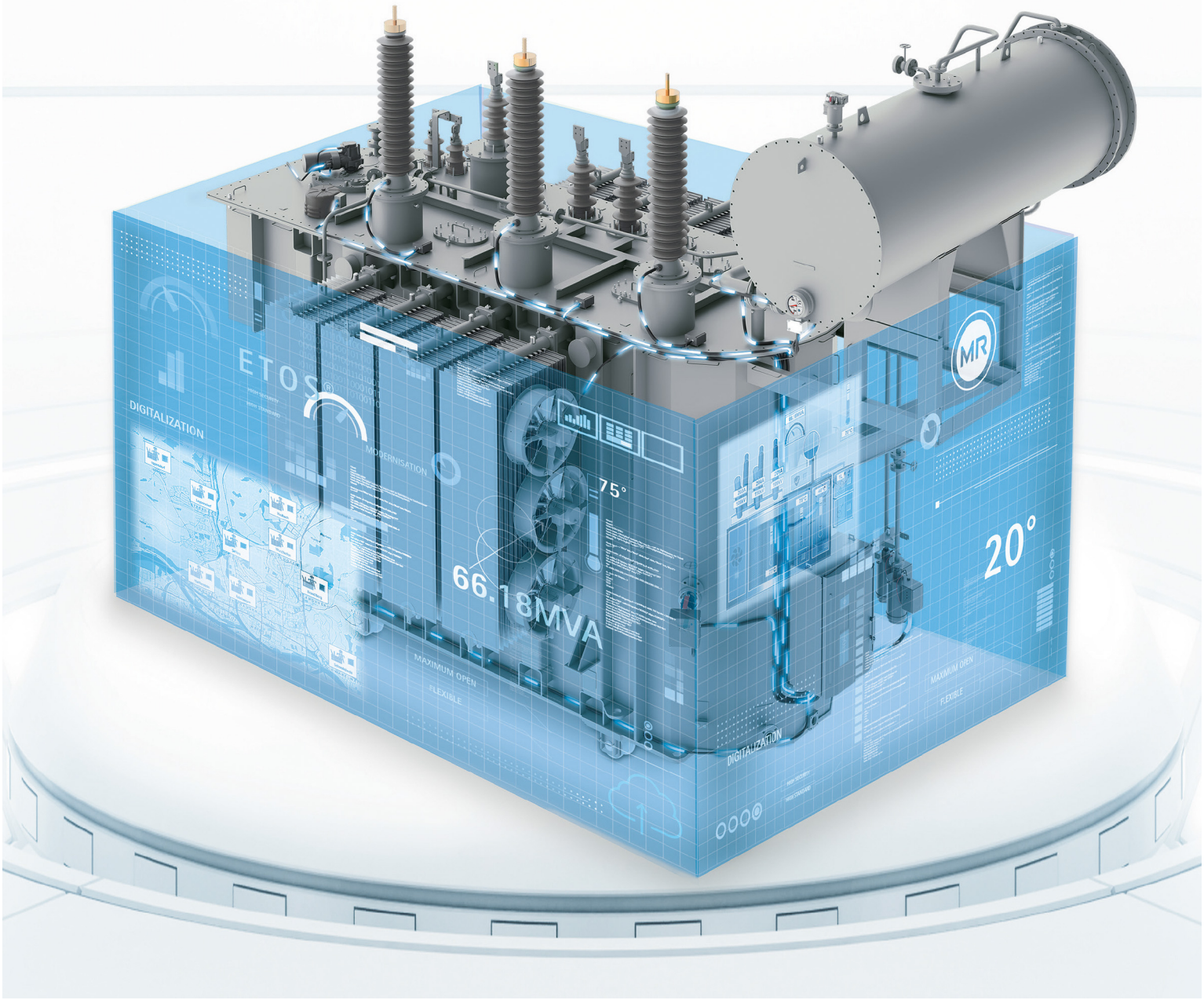

The original operating instructions were written in German.

Table of contents

1 Introduction

This technical file contains detailed descriptions on the safe and proper installation, connection, commissioning and monitoring of the product.

It also includes safety instructions and general information about the product.

This technical file is intended solely for specially trained and authorized personnel.

1.1 Manufacturer

The product is manufactured by:

Maschinenfabrik Reinhausen GmbH

Falkensteinstraße 8
93059 Regensburg
Tel.: (+49) 9 41/40 90-0
E-mail: sales@reinhausen.com

Further information on the product and copies of this technical file are available from this address if required.

1.2 Completeness

This technical file is incomplete without the supporting documents.

The following documents also apply in addition to this technical file:

- Connection diagrams
- Routine test report
- Supplement

Also observe generally valid legislation, standards, and guidelines as well as specifications on accident prevention and environmental protection in the respective country of use.

1.3 Safekeeping

Keep this technical file and all supporting documents ready at hand and accessible for future use at all times.

1.4 Notation conventions

1.4.1 Symbols

Symbol	Meaning
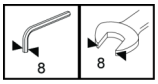	Wrench size
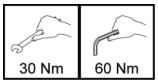	Tightening torque
	Number and type of fastening material used
	Fill with oil
	Cut open, cut through
	Clean
	Visual inspection
	Use your hand
	Adapter ring
	Apply a coat of paint
	Use a file
	Grease
	Coupling bolt
	Use a ruler

Symbol	Meaning
	Use a saw
	Hose clip
	Wire eyelet, safety wire
	Use a screwdriver
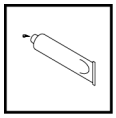	Apply adhesive
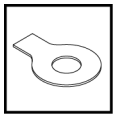	Lock tab

Table 1: Symbols

1.4.2 Hazard communication system

Warnings in this technical file are displayed as follows.

1.4.2.1 Warning relating to section

Warnings relating to sections refer to entire chapters or sections, sub-sections or several paragraphs within this technical file. Warnings relating to sections use the following format:

⚠ WARNING **Type of danger!**

Source of the danger and outcome.

► Action

► Action

1.4.2.2 Embedded warning information

Embedded warnings refer to a particular part within a section. These warnings apply to smaller units of information than the warnings relating to sections. Embedded warnings use the following format:

⚠ DANGER! Instruction for avoiding a dangerous situation.

1.4.2.3 Signal words and pictograms

The following signal words are used:

Signal word	Definition
DANGER	Indicates a hazardous situation which, if not avoided, will result in death or serious injury.
WARNING	Indicates a hazardous situation which, if not avoided, could result in death or serious injury.
CAUTION	Indicates a hazardous situation which, if not avoided, could result in minor or moderate injury.
NOTICE	Indicates measures to be taken to prevent damage to property.

Table 2: Signal words in warning notices

Pictograms warn of dangers:

Pictogram	Definition
	Warning of a danger point
	Warning of dangerous electrical voltage
	Warning of combustible substances
	Warning of danger of tipping
	Warning of danger of crushing

Table 3: Pictograms used in warning notices

1.4.3 Information system

Information is designed to simplify and improve understanding of particular procedures. In this technical file it is laid out as follows:

Important information.

1.4.4 Instruction system

This technical file contains single-step and multi-step instructions.

Single-step instructions

Instructions which consist of only a single process step are structured as follows:

Aim of action
✓ Requirements (optional).
▶ Step 1 of 1.
⇨ Result of step (optional).
⇨ Result of action (optional).

Multi-step instructions

Instructions which consist of several process steps are structured as follows:

Aim of action
✓ Requirements (optional).
1. Step 1.
⇨ Result of step (optional).
2. Step 2.
⇨ Result of step (optional).
⇨ Result of action (optional).

1.4.5 Typographic conventions

Typographic convention	Purpose	Example
UPPERCASE	Operating controls, switches	ON/OFF
[Brackets]	PC keyboard	[Ctrl] + [Alt]
Bold	Software operating controls	Press **Continue** button
…>…>…	Menu paths	Parameter > Control parameter
Italics	System messages, error messages, signals	*Function monitoring* alarm triggered
[▶ Number of pages]	Cross reference	[▶ Page 41].
Dotted underscore	Glossary entry, abbreviations, definitions, etc.	Glossary entry

Table 4: Typographic conventions used in this technical file

1.5 Notes on the VACUTAP® RMV-II operating instructions

The VACUTAP® RMV-II on-load tap-changer operating instructions (document number 2159612/03) includes descriptions regarding the TAPMOTION® MD-III motor-drive unit. These descriptions no longer apply when using the ETOS® TD motor-drive unit.

The following table lists an overview of the content in the operating instructions 2159612/03 that is invalid and in which sections of these operating instructions (8014485/00) the corresponding descriptions can be found:

Invalid sections of RMV-II (2159612/03)	Comments and valid equivalent in ETOS TD (this document)
3.3 Motor-drive unit	4 Product description
3.4 Monitoring system (VIM)	4.5.3.2 Monitoring system (VIM)
6 Fitting motor-drive unit	6 Mounting
7.1 Manual check Step 2 and 3	You have to perform these steps using the control switch in the control cabinet.
14 Operating the motor-drive unit with the hand crank	Not possible, because there is no hand crank
16.3 Monitoring system displays and controls	4.5.3.2.3 Displays and controls
17.6 Maintaining the motor-drive unit	11.1 Maintaining the motor-drive unit

Table 5: Invalid information in the VACUTAP® RMV-II operating instructions

2 Safety

- Read this technical file through to familiarize yourself with the product.
- This technical file is a part of the product.
- Read and observe the safety instructions provided in this chapter.
- Read and observe the warnings in this technical file in order to avoid function-related dangers.
- The product is manufactured on the basis of state-of-the-art technology. Nevertheless, risks to life and limb for the user or impairment of the product and other material assets due to the function may arise in the event of improper use.

2.1 Appropriate use

If used as intended and in compliance with the requirements and conditions specified in this technical document as well as with the warnings in this technical document and attached to the product, then the product does not present any danger to people, property or the environment. This applies throughout the product's entire life, from delivery through installation and operation to disassembly and disposal.

The operational quality-assurance system ensures a consistently high quality standard, particularly in regard to the observance of health and safety requirements.

The following is considered appropriate use:

- Only operate the product in accordance with this technical file and the agreed delivery conditions and technical data
- Use the equipment and special tools supplied solely for the intended purpose and in accordance with the specifications of this technical file
- Use the product only with the transformer specified in the order
- You will find the standard valid for the product and the year of issue on the nameplate
- The serial numbers of on-load tap-changers and on-load tap-changer accessories (drive, drive shaft, bevel gear, protective relay etc.) must match if the on-load tap-changers and on-load tap-changer accessories are supplied as a set for one order

2.2 Inappropriate use

Use is considered to be inappropriate if the product is used other than as described in the Appropriate use section. Please also note the following:

- Risk of explosion and fire from highly flammable or explosive gases, vapors, or dusts. Do not operate product in areas at risk of explosion.
- Unauthorized or inappropriate changes to the product may lead to personal injury, material damage, and operational faults. Only modify product following discussion with Maschinenfabrik Reinhausen GmbH.

2.3 Fundamental safety instructions

To prevent accidents, malfunctions and damage as well as unacceptable adverse effects on the environment, those responsible for transport, installation, operation, maintenance and disposal of the product or parts of the product must ensure the following:

Personal protective equipment

Loosely worn or unsuitable clothing increases the danger of becoming trapped or caught up in rotating parts and the danger of getting caught on protruding parts. This poses a danger to life and limb.

- Wear appropriate personal protective equipment such as a helmet, work gloves, etc. for the respective activity.
- Never wear damaged personal protective equipment.
- Never wear rings, necklaces, or other jewelry.
- If you have long hair, wear a hairnet.

Work area

Untidy and poorly lit work areas can lead to accidents.

- Keep the work area clean and tidy.
- Make sure that the work area is well lit.
- Observe the applicable laws for accident prevention in the relevant country.

Drying the transformer

Drying the motor-drive unit will cause damage to property as well as motor-drive unit malfunctions.

- Never dry the motor-drive unit.

Working during operation

The product may only be operated in a sound, operational condition. Otherwise it poses a danger to life and limb.

- Regularly check the operational reliability of safety equipment.
- Comply with the inspection work, maintenance work and maintenance intervals described in this technical file.

Invisible laser radiation

Looking directly into the beam or the reflected beam can cause eye damage. The beam is emitted at the optical connections or at the end of the fiber-optic cables connected to them on the assemblies. Read the chapter "Technical Data" [▶ Section 15, Page 366] for further information.

- Never look directly into the beam or the reflected beam.
- Never look into the beam with the aid of optical instruments such as a magnifying glass or a microscope.
- In the event that the laser beam strikes your eyes, close your eyes immediately and move your head out of the path of the beam.

Working with current transformers

Dangerous high voltages may occur when a current transformer is operated with an open secondary circuit. This can lead to injuries and property damage.

- Never operate a current transformer with an open secondary circuit; short-circuit the current transformer to prevent this.
- Observe the information in the current transformer operating instructions.

Handling electrical components

Electrical components can be damaged by electrostatic discharge.

- Never touch electrical components during commissioning, operation or maintenance work.
- Take suitable measures (such as covers) to ensure that personnel cannot touch components.
- Wear suitable personal protective equipment.

Explosion protection

Highly flammable or explosive gases, vapors and dusts can cause serious explosions and fire. This increases the danger to life and limb.

- Do not install, operate or perform maintenance work on the product in areas where a risk of explosion is present.

Safety markings

Warning signs and safety information plates are safety markings on the product. They are an important aspect of the safety concept.

- Observe all safety markings on the product.
- Make sure all safety markings on the product remain intact and legible.
- Replace safety markings that are damaged or missing.

Ambient conditions

To ensure reliable and safe operation, the product must only be operated under the ambient conditions specified in the technical data.

- Observe the specified operating conditions and requirements for the installation location.

Auxiliary materials and operating materials

Auxiliary materials and operating materials not approved by the manufacturer can lead to personal injury, damage to property and malfunctions of the product.

- Only use conductive and grounded hoses, pipes, and pump equipment that are approved for flammable liquids.
- Only use lubricants and auxiliary materials approved by the manufacturer.
- Contact the manufacturer.

Modifications and conversions

Unauthorized or inappropriate changes to the product may lead to personal injury, material damage and operational faults.

- Only modify the product after consultation with Maschinenfabrik Reinhausen GmbH.

Spare parts

Spare parts not approved by Maschinenfabrik Reinhausen GmbH may lead to physical injury, damage to the product and malfunctions.

- Only use spare parts that have been approved by Maschinenfabrik Reinhausen GmbH.
- Contact Maschinenfabrik Reinhausen GmbH.

2.4 Personnel qualification

The person responsible for assembly, commissioning, operation, maintenance and inspection must ensure that the personnel are sufficiently qualified.

Electrically skilled person

The electrically skilled person has a technical qualification and therefore has the required knowledge and experience, and is also conversant with the applicable standards and regulations. The electrically skilled person is also proficient in the following:

- Can identify potential dangers independently and is able to avoid them.
- Is able to perform work on electrical systems.
- Is specially trained for the working environment in which (s)he works.
- Must satisfy the requirements of the applicable statutory regulations for accident prevention.

Electrically trained persons

An electrically trained person receives instruction and guidance from an electrically skilled person in relation to the tasks undertaken and the potential dangers in the event of inappropriate handling as well as the protective devices and safety measures. The electrically trained person works exclusively under the guidance and supervision of an electrically skilled person.

Operator

The operator uses and operates the product in line with this technical file. The operating company provides the operator with instruction and training on the specific tasks and the associated potential dangers arising from improper handling.

Technical Service

We strongly recommend having maintenance, repairs and retrofitting carried out by our Technical Service department. This ensures that all work is performed correctly. If maintenance is not carried out by our Technical Service department, please ensure that the personnel who carry out the maintenance are trained and authorized by Maschinenfabrik Reinhausen GmbH to carry out the work.

Authorized personnel

Authorized personnel are trained by Maschinenfabrik Reinhausen GmbH to carry out special maintenance.

2.5 Personal protective equipment

Personal protective equipment must be worn during work to minimize risks to health.

- Always wear the personal protective equipment required for the job at hand.
- Never wear damaged personal protective equipment.
- Observe information about personal protective equipment provided in the work area.

Protective clothing	Close-fitting work clothing with a low tearing strength, with tight sleeves and with no protruding parts. It mainly serves to protect the wearer against being caught by moving machine parts.
Safety shoes	To protect against falling heavy objects and slipping on slippery surfaces.
Safety glasses	To protect the eyes from flying parts and splashing liquids.
Visor	To protect the face from flying parts and splashing liquids or other dangerous substances.
Hard hat	To protect against falling and flying parts and materials.

Hearing protection	To protect against hearing damage.
Protective gloves	To protect against mechanical, thermal, and electrical hazards.

Table 6: Personal protective equipment

2.6 Drying transformer

2.6.1 Drying transformer in autoclave

Observe the following information when drying the transformer in an autoclave.

NOTICE

Damage to drive and on-load tap-changer/de-energized tap-changer!

If the drive is dried in an autoclave, the drive and on-load tap-changer/de-energized tap-changer may be damaged.

- ► Do not dry drive in an autoclave.
- ► Remove on-load tap-changer head cover with gear motor before drying. To do so, follow the operating instructions of the on-load tap-changer. Do not remove gear motor from the on-load tap-changer head cover.

2.6.2 Drying transformer in its own tank

If you dry the transformer in its own tank, the drive can remain attached to the transformer during drying.

3 IT security

Observe the following recommendations to operate the product safely.

3.1 General

- Ensure that only authorized personnel have access to the device.
- Only use the device within an ESP (electronic security perimeter). Do not connect the device to the Internet in an unprotected state. Use mechanisms for vertical and horizontal network segmenting and security gateways (firewalls) at the transition points.
- Ensure that the device is only operated by trained personnel who are familiar with IT security.

3.2 Commissioning

Observe the following recommendations for device commissioning:

- User IDs must be unique and assignable. Do not use a "Group account" function or the "Auto login" function.
- Activate the "Auto logout [▶Section 9.2.2, Page 102]" function.
- Restrict the rights of the individual user groups as much as is feasible; this helps avoid errors during operations. A user with the "Operator" role, for example, should only perform operations and should not be able to change any device settings.
- Delete or disable the default "admin" user ID. This requires first creating a new user account with the "Administrator" role. You can then use it to delete or disable the default "admin" account.
- Deactivate service user access [▶Section 9.2.3, Page 103].
- Enable SSL/TLS encryption [▶Section 9.2, Page 100]; access to the device is then only possible using the SSL/TLS protocol. In addition to encrypting communication, this protocol also checks the authenticity of the server.
- Use TLS version 1.2 or higher wherever possible.
- Integrate the device into a public key infrastructure. Create your own SSL certificates for this if necessary and then import them.
- Connect the device to a central log server by using the syslog interface [▶Section 9.6, Page 113].
- Only use the SNMP function if you can ensure that the communication is protected by external security equipment.
- Media converter with managed switch (assembly SW 3-3) [▶Section 9.37, Page 326]:
  - Change user account and password.
  - Disable unnecessary services.

3.3 Operation

Observe the following recommendations during device operation:

- Change the password at regular intervals.
- Export the security log [▶Section 9.36.1, Page 323] at regular intervals.
- Check the log files regularly for unauthorized system access and other security-related events.
- Media converter with managed switch (assembly SW 3-3): Check at regular intervals whether the manufacturer Belden/Hirschmann has released an update for the product “EES 25” and, where necessary, perform a firmware update [▶Section 9.37.3, Page 329].

3.4 Interfaces

The device uses the following interfaces for communication:

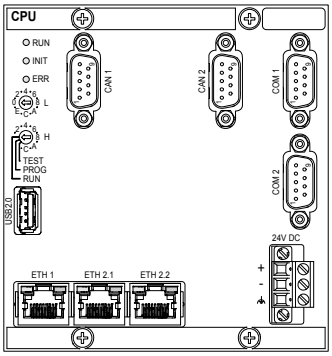

Figure 1: CPU assembly interfaces

Interface	Protocol	Port	Description
CAN 1	-	-	DIO assembly connection
CAN 2	-	-	Communication with other ISM® devices (e.g. parallel operation)
COM 1	-	-	Internal system interface
COM 2	-	-	Serial interface (SCADA)
USB	-	-	Import or export of data
ETH 1	TCP	80	HTTP for web-based visualization[1), 2)]
ETH 1	TCP	443	HTTPS for web-based visualization[2)]
ETH 1	TCP	102	IEC 61850
ETH 1	TCP	502	Modbus[3)]
ETH 1	TCP	20000	DNP3[3)]
ETH 1	UDP	161	SNMP[4)]
ETH 2.x	TCP	21	FTP[1)] (only for MR service)

Interface	Protocol	Port	Description
ETH 2.x	TCP	80	HTTP for web-based visualization[1)]
ETH 2.x	TCP	443	HTTPS for web-based visualization
ETH 2.x	TCP	990	FTPS (only for MR service)
ETH 2.x	TCP	8080	HTTP for web-based visualization[1)]
ETH 2.x	TCP	8081	HTTPS for web-based visualization
ETH 2.x	UDP	161	SNMP[4)]

Table 7: Interfaces and open ports of the CPU assembly

[1)] Port is closed if you activate the device's SSL encryption.

[2)] Depending on the setting of the parameter Visualization release [▶Page 106].

[3)] Default setting; if you have modified the port for the control system protocol, only the set port is open.

[4)] Depending on the setting of the SNMP agent parameter.

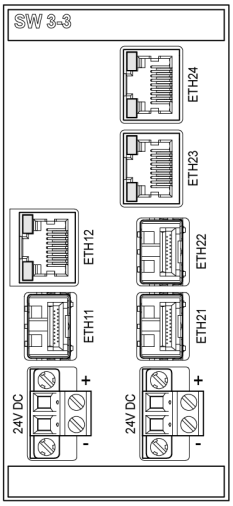

Figure 2: Assembly SW 3-3 interfaces

Interface	Protocol	Port	Description
ETH 2.3, ETH 2.4	TCP	22	SSH[1)]
		23	Telnet[1)]
		80	HTTP for web-based visualization[1)]
		443	HTTPS for web-based visualization[1)]
	UDP	161	SNMP[1)]

Table 8: Interfaces and open ports of the SW 3-3 assembly

[1)] Port is closed if the corresponding service is disabled.

3.5 Encryption standards

The device supports the following TLS versions:

- TLS 1.0
- TLS 1.1
- TLS 1.2

The device uses the following cipher suites for a TLS-secured connection:

	Key exchange	Authentication		Encryption	Key length	Operating mode	Hash function
TLS	ECDHE	RSA	WITH	AES	128	CBC	SHA[1)]
	DHE						SHA265
	ECDHE	ECDSA				GCM	SHA256
	ECDH				256	CBC	SHA[1)]
	RSA[1)]						SHA256
						GCM	SHA384

Table 9: Cipher suite

[1)] Not available with TLS version >= 1.2

The device uses the SHA256 hash function to save passwords.

The SW 3-3 assembly supports the following TLS version:

- TLS 1.2

The assembly uses the following cipher suites for a TLS-secured connection:

	Key exchange	Authentication		Encryption	Key length	Operating mode	Hash function
TLS	ECDHE	RSA	WITH	AES	128	GCM	SHA265
	DHE					CBC	SHA

Table 10: Cipher suite

The device uses the following encryption standards in accordance with technical directive TR-02102-4 from Germany's Federal Office for Information Security:

- Key agreement:
  - diffie-hellman-group1-sha1
  - diffie-hellman-group14-sha1
  - diffie-hellman-group16-sha512
  - diffie-hellman-group18-sha512
  - diffie-hellman-group-exchange-sha256
  - ecdh-sha2-nistp256

- Server authentication:
  - ssh-rsa
  - rsa-sha2-512
  - rsa-sha2-256
- Encryption algorithms:
  - aes128-ctr
  - aes128-gcm@openssh.com
  - chacha20-poly1305@openssh.com
- MAC protection:
  - hmac-sha1
  - hmac-sha2-256
  - hmac-sha1-etm@openssh.com
  - hmac-sha2-256-etm@openssh.com
- Compression:
  - None
  - zlib@openssh.com
  - Zlib

4 Product description

4.1 Scope of delivery

The motor-drive unit is packaged with protection against moisture and is delivered as follows:

- Gear motor
- Control cabinet
- Connection cable
- Product documentation

Please note the following:

1. Check the shipment for completeness using the shipping documents.
2. Store the parts in a dry place until installation.
3. The product must remain in its airtight, protective wrapping and may only be removed immediately before installation.

4.2 Function description

The motor-drive unit adjusts the operating position of on-load tap-changers in regulating transformers to the individual operating requirements.

To do so, a gear motor that is controlled by an electronic control unit is mounted on the on-load tap-changer. The electronic control unit is located in a control cabinet and is connected to the gear motor via a connection cable.

The motor-drive unit control unit can be configured and the measured values and results can be displayed using the web-based visualization. Here, the functional scope is based on the ordered product version.

4.3 Performance features

The motor-drive unit is characterized by the following features in particular:

- On-load tap-changer driven using the gear motor
- Electronic control of the gear motor
- Easy connection of the gear motor and control cabinet via integrated cable plug connection
- Automatic adjustment during commissioning
- OLTC pre-check: Check for compliance with the permissible operating conditions (load current, oil level, oil temperature) prior to each on-load tap-change operation
- Acquiring the monitoring system (VIM) signals
- Web-based visualization for configuring the motor-drive unit and displaying important data
- On-load tap-changer monitoring
- Transformer monitoring

- Integrated voltage regulation (optional)
- SCADA
  - IEC 60870-5-101
  - IEC 60870-5-103
  - IEC 60870-5-104
  - IEC 61850 (edition 1 and edition 2)
  - Modbus (RTU, TCP, ASCII)
  - DNP3
- Free digital inputs and outputs, depending on the device configuration
- Free analog inputs and outputs, depending on the device configuration

4.4 Operating modes

You can select the device operating mode using the rotary switch in the control cabinet. Depending on the device version, the rotary switch is designated S32 (without on-load tap-changer control) or S132 (with on-load tap-changer control). You can operate the device in the following operating modes:

LOCAL (S32/S132 in position LOC)

In the Local operating mode, you can only actuate the device using the operating elements in the control cabinet. Commands via digital inputs or SCADA are not possible. There is no automatic on-load tap-changer control.

REMOTE (S32/S132 in position REM)

In the Remote operating mode, you can actuate the device, depending on the setting of the Remote behavior [►Page 101] parameter, only via external key or SCADA commands. You can activate (AR AUTO) or deactivate (AVR manual) the optional on-load tap-changer control function via digital inputs or SCADA.

AUTO (S132 in position AUTO, only with option "Automatic on-load tap-changer control")

Automatic on-load tap-changer control is active only in the Auto operating mode. You cannot actuate the motor-drive unit manually in this mode. Commands via SCADA are possible depending on the setting of the Remote behavior [▶Page 101] parameter.

	LOCAL	REMOTE	AUTO
Control using S3 control switch	Yes	No	No
Control using digital inputs	No	Yes	No
Control using SCADA[1)]	No	Yes	No
On-load tap-changer control[2)]	AVR MANUAL	AVR MANUAL AVR AUTO	AVR AUTO

Table 11: Overview of operating modes

[1)] Optional when connecting the motor-drive unit to a control system (SCADA)

[2)] Only with the on-load tap-changer control option

4.5 Design

This chapter contains an overview of the design of the motor-drive unit. The entire system consisting of the on-load tap-changer and motor-drive unit includes the following subassemblies:

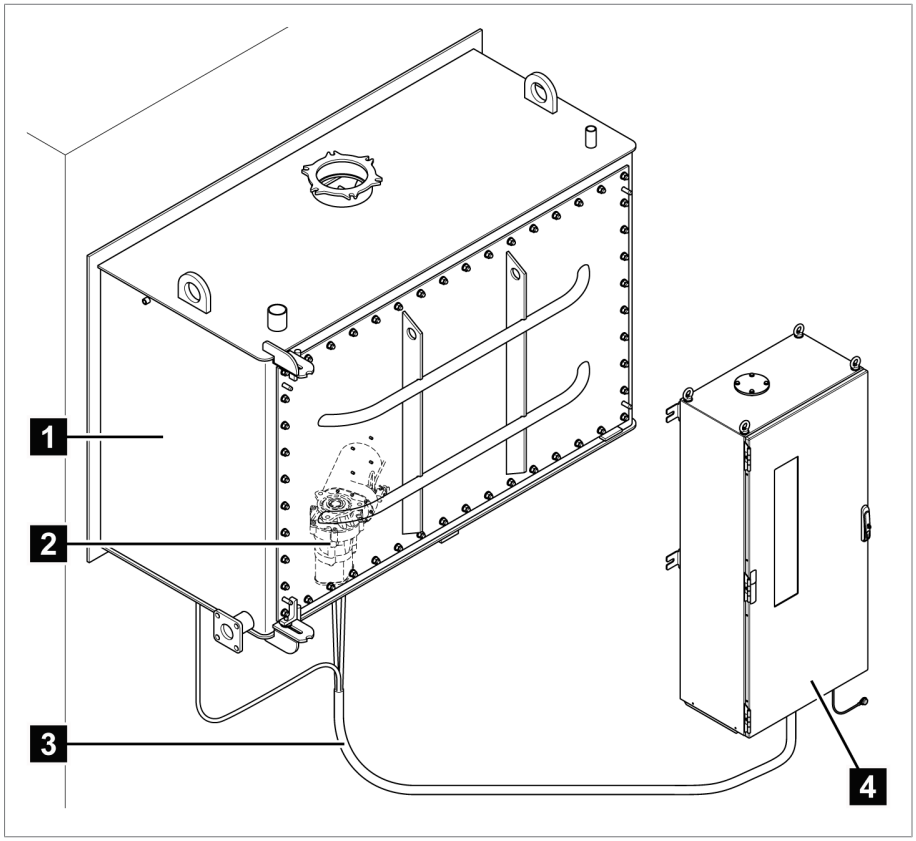

Figure 3: Design

1	On-load tap-changer	3	Connecting cable
2	Gear motor	4	Control cabinet

4.5.1 Name plate

The name plate is in the control cabinet of the motor-drive unit.

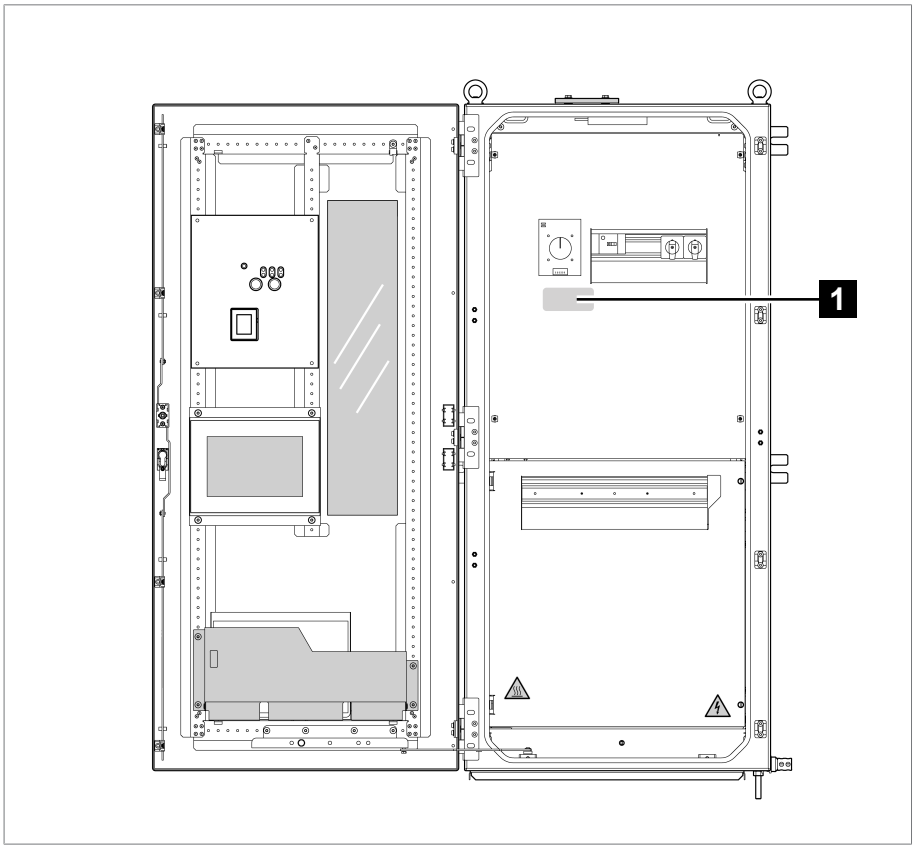

Figure 4: Nameplate

1	Nameplate

4.5.2 Gear motor

The gear motor is positioned below the on-load tap-changer. It is connected directly to the drive shaft of the on-load tap-changer and carries out the on-load tap change operation.

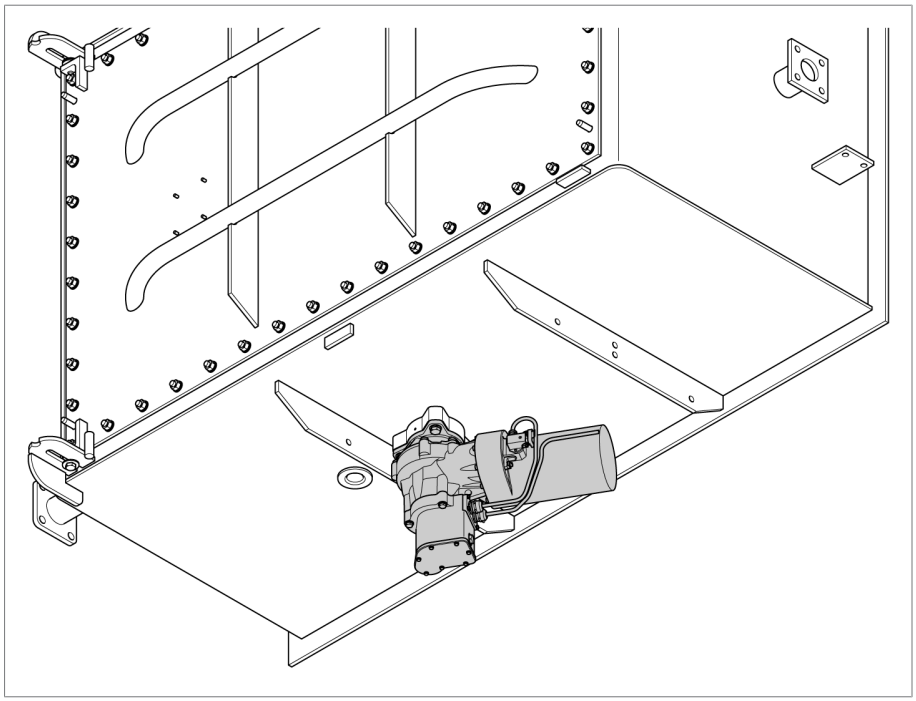

Figure 5: Gear motor

4.5.3 Control cabinet

The control cabinet contains the following components:

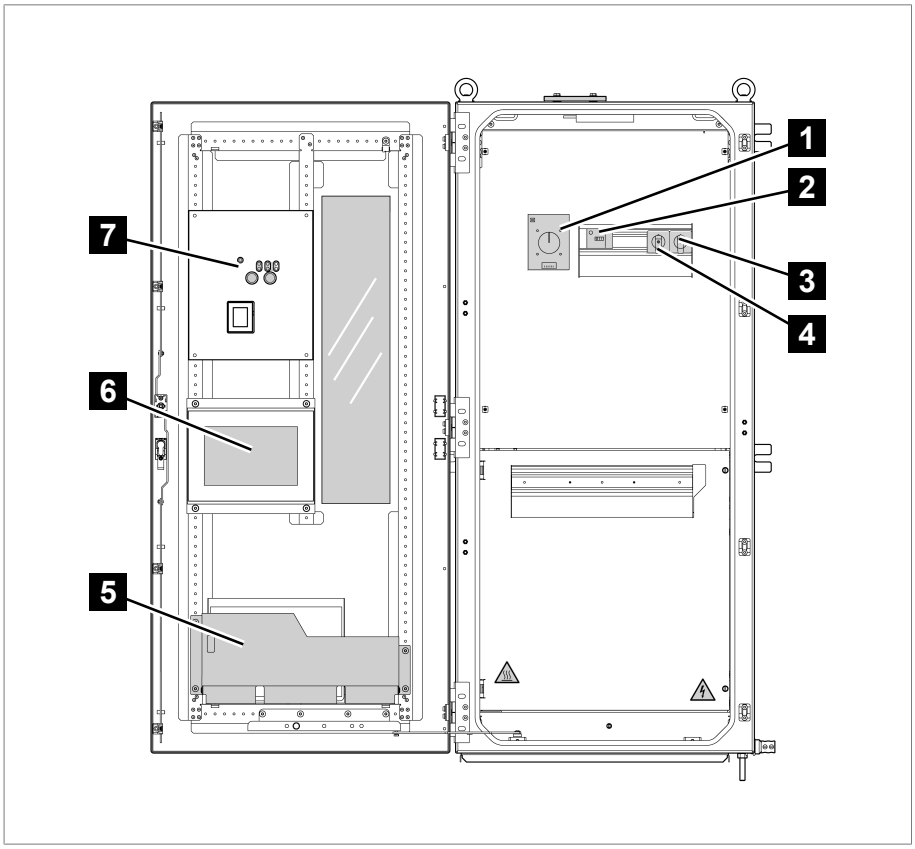

Figure 6: Control cabinet

1	Tap position display	2	Motor protective switch Q1
3	S32 rotary switch	4	S3 rotary switch
5	Briefcase	6	MControl display (optional)
7	Monitoring system (VIM)		

Operating elements

The control cabinet contains the following operating elements:

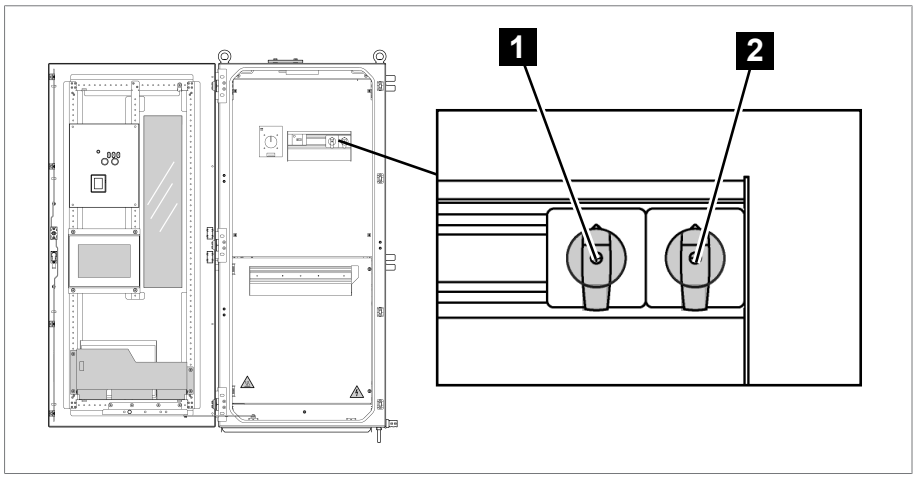

Figure 7: Operating elements

1	Control switch S3 RAISE/LOWER	2	Control switch S32 LOC/REM or S132 LOC/AUTO/REM

Display elements

The control cabinet contains the following display elements:

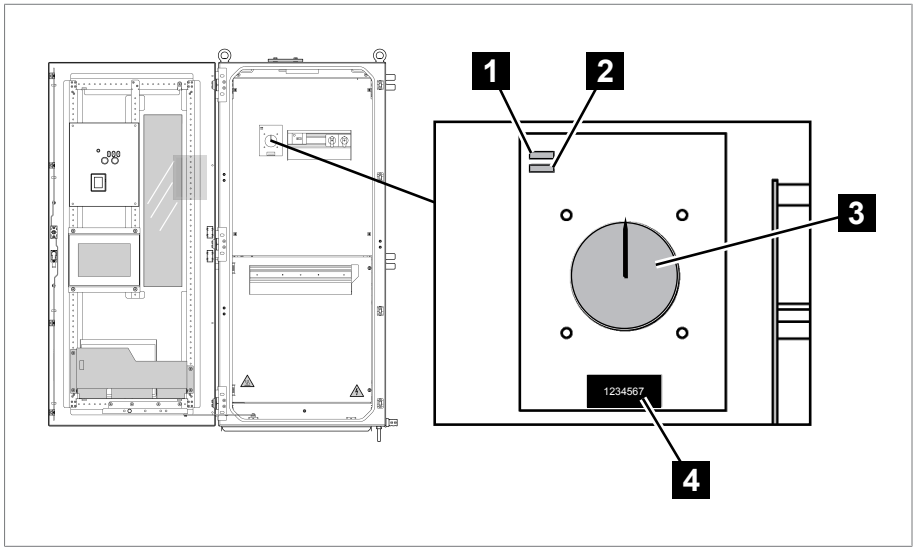

Figure 8: Display elements

1	*Motor running* LED	2	*Event yellow/red* LED
3	Tap position display	4	Operations counter

4.5.3.1 ISM® assemblies

4.5.3.1.1 Power supply

4.5.3.1.1.1 QS3.241

The G1 PULS DIMENSION QS3.241 assembly supplies power to the ISM® assemblies.

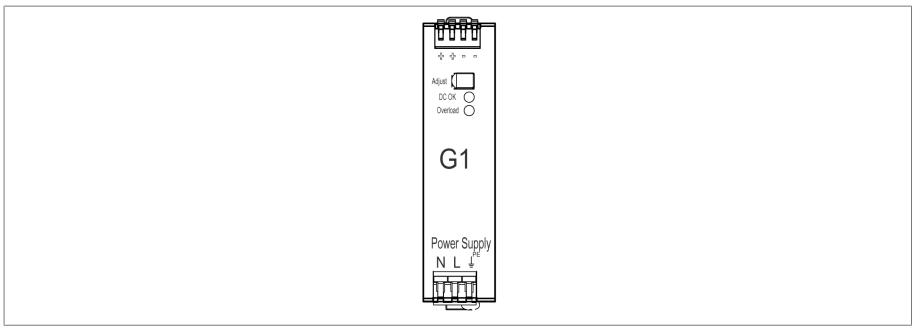

Figure 9: PULS DIMENSION QS3.241 assembly

4.5.3.1.2 Central processing unit

4.5.3.1.2.1 CPU I

The CPU I assembly is the central processing unit for the device. It contains the following interfaces:

- Internal system interface RS232 (COM1)
- Serial interface RS232/485 (COM2)
- 3x Ethernet (ETH1, ETH 2.1, ETH 2.2)
- USB (USB 2.0)
- 2x CAN bus (CAN 1, CAN 2)

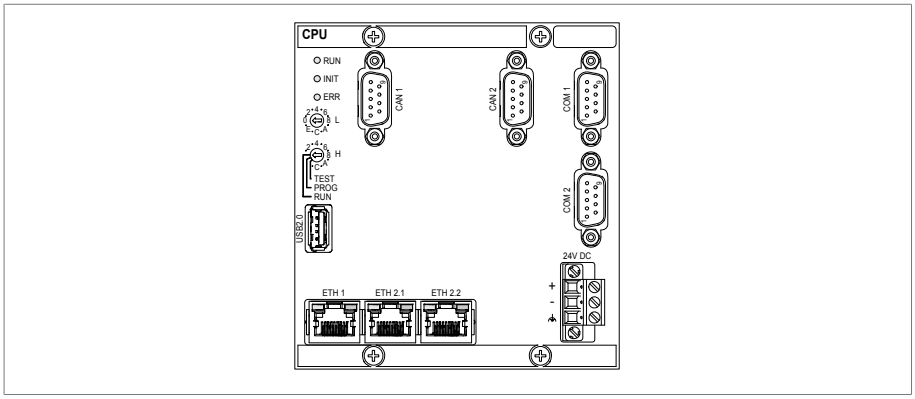

Figure 10: CPU I assembly

4.5.3.1.2.2 CPU II

The CPU II assembly is the central computing unit for the device. It contains the following interfaces:

- Internal system interface RS232 (COM1)
- Serial interface RS232/485 (COM2)
- 3x Ethernet (ETH 1, ETH 2.1, ETH 2.2)
- USB (USB 2.0)
- 2x CAN bus (CAN 1, CAN 2)

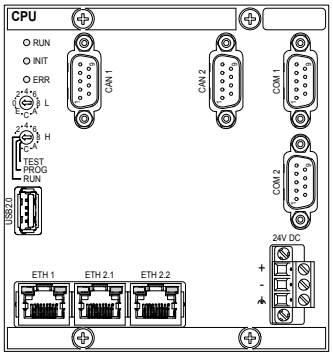

Figure 11: CPU assembly

4.5.3.1.3 Voltage measurement and current measurement

4.5.3.1.3.1 UI 1 and UI 3

The UI 1 assembly is used for measuring 1-phase voltage and current.

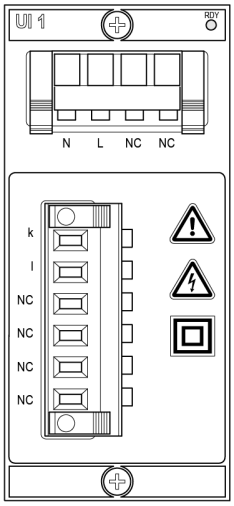

Figure 12: UI 1 assembly

The UI 3 assembly is used for measuring 3-phase voltage and current.

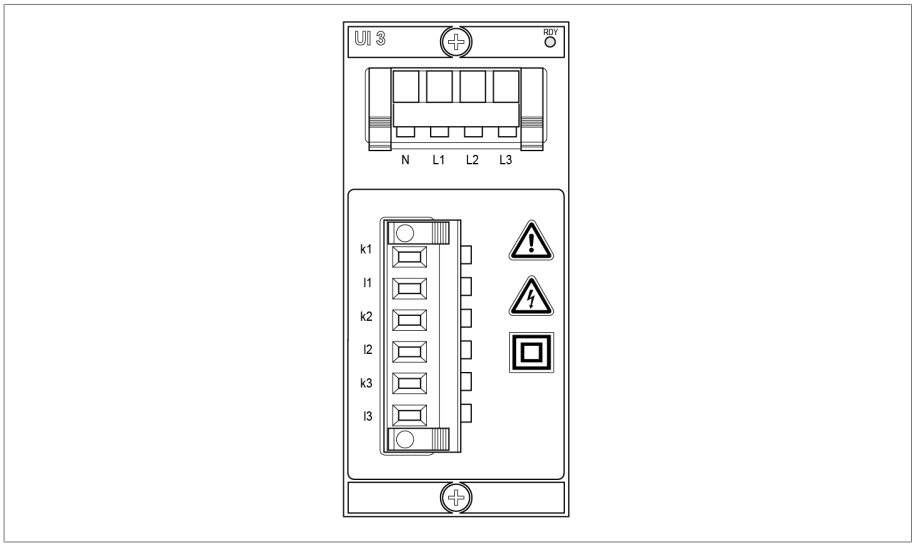

Figure 13: UI 3 assembly

⚠	Warning of a danger point. Read the information given in the product operating instructions.
⚠	Warning of dangerous electrical voltage.
⧈	This assembly is protected via double insulation or reinforced insulation.

Table 12: Safety-relevant symbols on the assembly

4.5.3.1.3.2 UI 5-4

The UI 5-4 assembly is used for measuring 3-phase voltage and current.

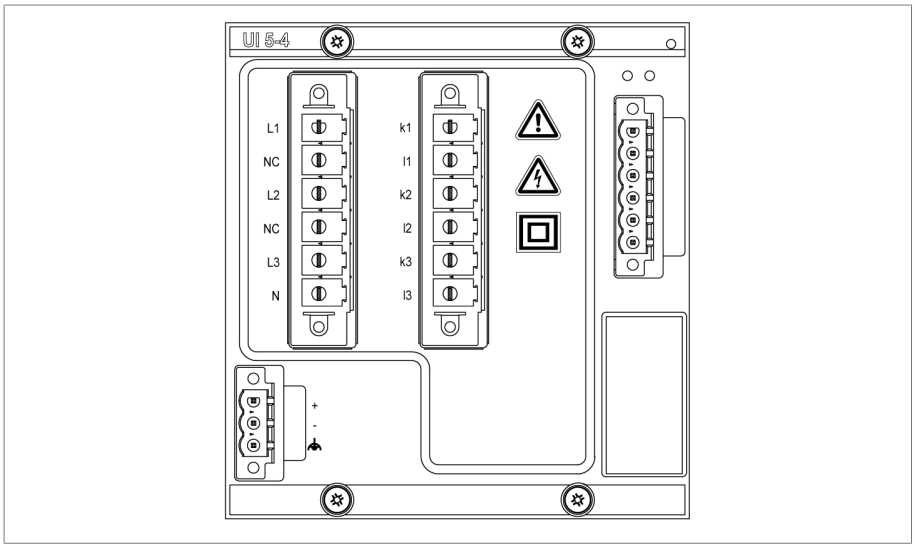

Figure 14: UI 5-4 assembly

⚠	Warning of a danger point. Read the information given in the product operating instructions.
⚠	Warning of dangerous electrical voltage.
⧈	This assembly is protected via double insulation or reinforced insulation.

Table 13: Safety-relevant symbols on the assembly

4.5.3.1.4 Digital inputs and outputs

4.5.3.1.4.1 DIO 28-15 and DIO 42-20

The assemblies DIO 28-15 and DIO 42-20 (HL) provide you with a number of digital inputs and outputs that differs based on the version:

- DIO 28-15: 28 inputs, 15 outputs (6 N/O contacts, 9 change-over contacts)
- DIO 42-20 (HL): 42 inputs, 20 outputs (8 N/O contacts, 12 change-over contacts)

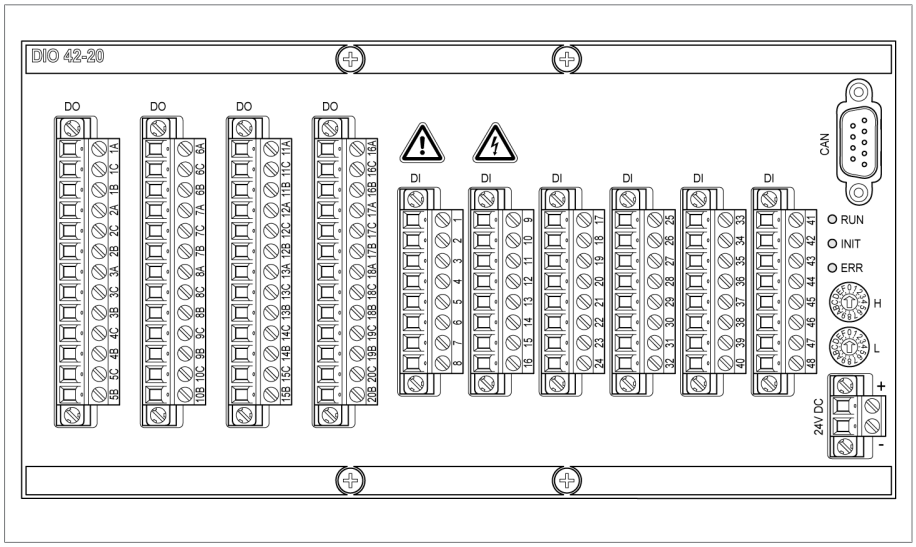

Figure 15: DIO 42-20 assembly

⚠	Warning of a danger point. Read the information given in the product operating instructions.
⚠	Warning of dangerous electrical voltage.

Table 14: Safety-relevant symbols on the assembly

4.5.3.1.5 Analog inputs and outputs

4.5.3.1.5.1 AIO 2 and AIO 4

The AIO 2 and AIO 4 assemblies provide analog inputs and outputs:

- AIO 2: 2 channels
- AIO 4: 4 channels

In accordance with the device configuration, the AIO assembly supports one of the following signal types:

Input		Output	
Voltage	**Current**	**Voltage**	**Current**
0...10 V	0...20 mA	0...10 V	0...20 mA
	4...20 mA		4...20 mA
Resistance measurement (such as PT100, resistor contact series)			

Table 15: Signal types supported by the AIO assembly

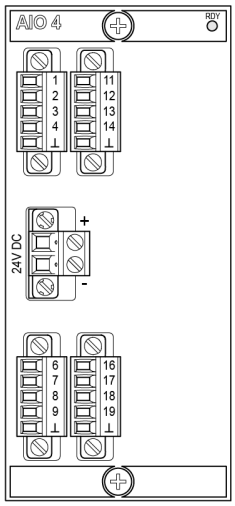

Figure 16: AIO 4 assembly

4.5.3.1.6 System networking

4.5.3.1.6.1 MC 2-2

The MC 2-2 assembly is a media converter, which converts 2 electrical connections (RJ45) to one fiber-optic cable connection each. Each is converted independently of the other. The following interfaces are available:

- 2x RJ45 (ETH12, ETH22)
- 2x Duplex-LC (SFP module) (ETH11, ETH21)

The media converter is designed to be transparent for the network and does not have its own IP address.

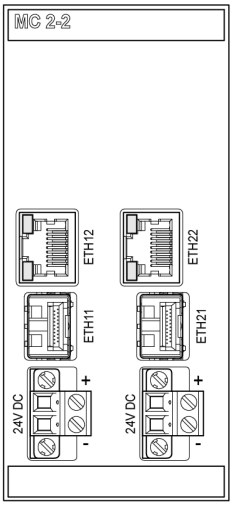

Figure 17: MC 2-2 assembly

4.5.3.1.6.2 SW 3-3

The assembly SW 3-3 is a media converter with managed switch. It combines two independent functions and provides you with the following interfaces:

- A media converter converts an electric connection (RJ45) into a fiber-optic cable connection
  - RJ45 (ETH12)
  - Duplex-LC (SFP module) (ETH11)
- Managed switch with redundancy function (PRP or RSTP)
  - 2x RJ45 (ETH23, ETH24), device-internal connection
  - 2x Duplex-LC (SFP module) (ETH21, ETH22), redundancy connection

The following redundancy functions are available to you according to your order:

- PRP (standard setting)
- RSTP

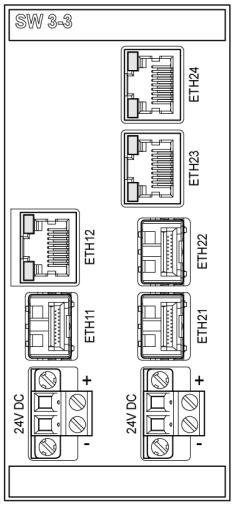

Figure 18: SW 3-3 assembly

4.5.3.2 Monitoring system (VIM)

The monitoring system is also known as the VIM module (Vacuum Interrupter Monitoring).

4.5.3.2.1 Function description

The monitoring system can detect a vacuum interrupter malfunction in the following operating modes:

- Electric on-load tap-change operation resulting from manual actuation of the RAISE/LOWER control switch
- Electrical on-load tap-change operation resulting from automatic activation by a voltage regulator

In the event of an error, the monitoring system triggers the following actions:

- The on-load tap-changer is stopped and returned to its starting position
- The motor protective switch 8-2 is tripped
- Further electrical on-load tap-change operations are blocked
- The error indication on the monitoring circuit board lights up
  - Yellow LED if there are faults in the signal transmission
  - Red LED should a vacuum interrupter experience an error
- Faults are indicated by the red *Alarm* indicator light (86RL) on the swing frame of the motor-drive unit lighting up.

4.5.3.2.2 Monitoring system design

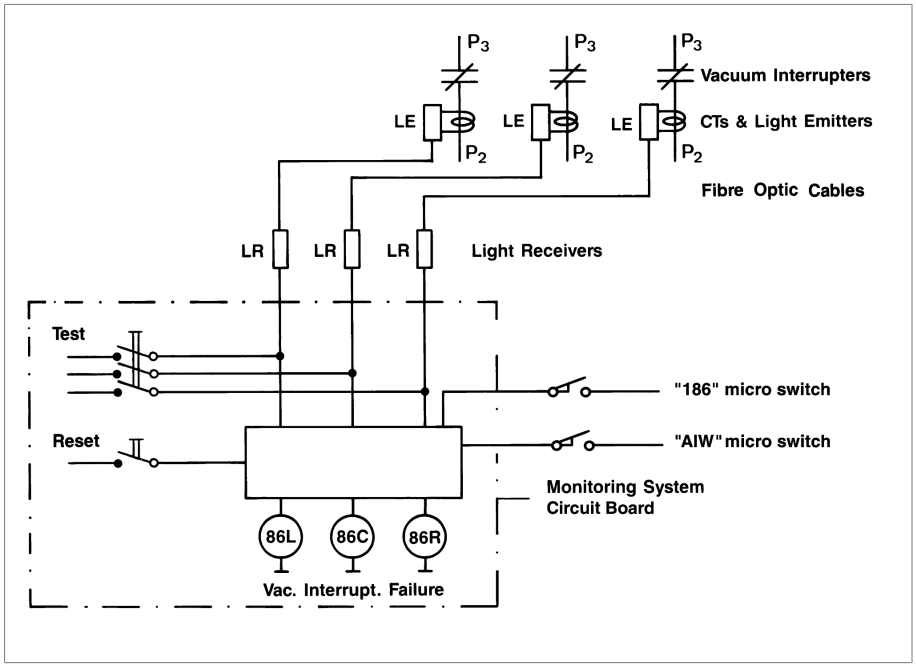

Figure 19: Monitoring system (VIM), schematic diagram

The monitoring system evaluates the current signals in the on-load tap-changer. For fail-safe transmission, the current signals are converted into optical signals and transferred via fiber-optic cables. The monitoring system carries out the following checks:

1. After the by-pass switch has opened and before the vacuum interrupter opens, there must be a current signal.
2. Once the vacuum interrupter opens, there must be no current signal present.

If one is present, the monitoring system generates an alarm signal.

The monitoring system is also fitted with self-monitoring, which checks the internal circuits. At the input, the electronics are protected by a Zener diode and an interchangeable fuse.

4.5.3.2.3 Displays and controls

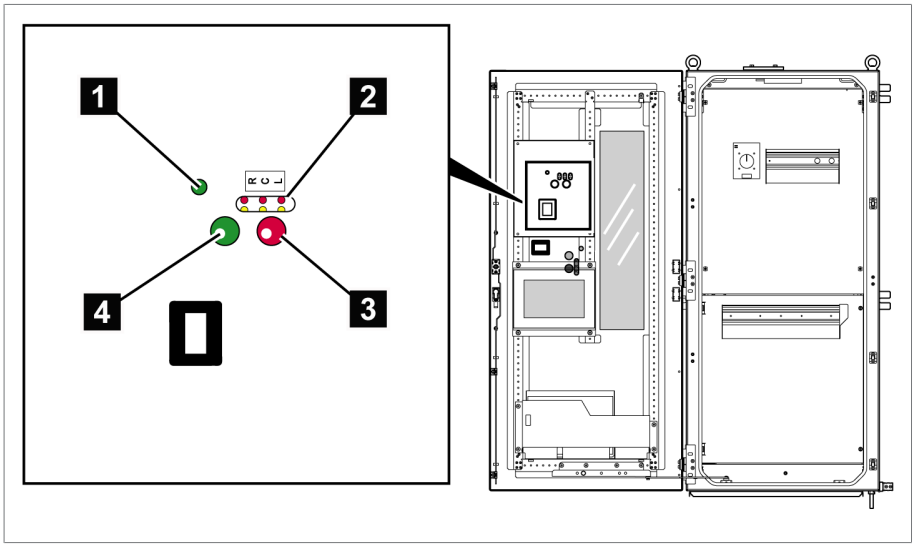

Figure 20: Monitoring system (VIM) displays and controls

1	*Power* LED (green)	2	1 yellow and 1 red LED per phase for signaling errors
3	RESET key (red)	4	TEST key (green)

The following monitoring system (VIM) displays and controls are located in the motor-drive unit control cabinet:

- The green TEST key is used to check the internal circuitry of the monitoring system.
- 1 green LED indicates the control voltage supply present
- 3 red LEDs (1 per phase) indicate when a vacuum interrupter malfunction has been recorded
  - The monitoring system performs this check during every diverter switch operation
- 3 yellow LEDs (1 per phase) indicate the loss of the current-transformer signal
  - The monitoring system repeats this check after every 2 tap-change operations for network applications and after every 32 tap-change operations for industrial applications.
- The red RESET key is used to activate the monitoring system after an inspection.

4.5.3.2.4 Maintenance mode

When performing test tap-change operations with a de-energized transformer, it may be useful to put the monitoring system into maintenance mode. If this happens, then the integrity test for the fiber-optic cable is suspended.

Proceed as follows to switch to maintenance mode:

1. ⚠ DANGER! Make sure that the transformer is de-energized. Otherwise, activating maintenance mode may lead to personal injury or property damage.
2. Press and hold the RESET key for around 6 seconds to disable the verification system for 10 hours.
   ⇨ The 3 yellow LEDs on the monitoring circuit board flash slowly.
   ⇨ At the end of the 10 hours, the yellow LEDs go out and the unit returns to its normal function.

Press the TEST key to exit maintenance mode before the 10 hours expire.

4.5.3.2.5 Test function

An error can be simulated by pressing the green TEST key, for example to check that the on-load tap-changer returns to its starting position during an on-load tap-change operation. The alarm status can be reset by pressing the red RESET key. You will find a description of this function in the Monitoring system verification section.

4.5.3.2.6 Overview of monitoring system operating statuses

In the motor-drive unit, LEDs on the monitoring circuit board and on the swing frame indicate various operating states or events:

Operating state	Monitoring display			Swing frame display	
	Green LED *Power*	Yellow LED *Fault*	Red LED *Alarm*	86GL *VIM ok*	86RL *VIM Alarm*
Normal operation	ON	OFF	OFF	ON	OFF
Fault in control voltage supply	OFF	OFF	OFF	OFF	OFF
Loss of current transformer signal	ON	ON	OFF	ON	ON
Vacuum interrupter error	ON	OFF	ON	ON	ON
Maintenance mode	ON	FLASHING	OFF	ON	OFF
Test mode	ON	OFF	ON	ON	ON

Table 16: Overview of the monitoring system operating states

4.6 Visualization

4.6.1 Main screen

The web-based visualization is split into various areas.

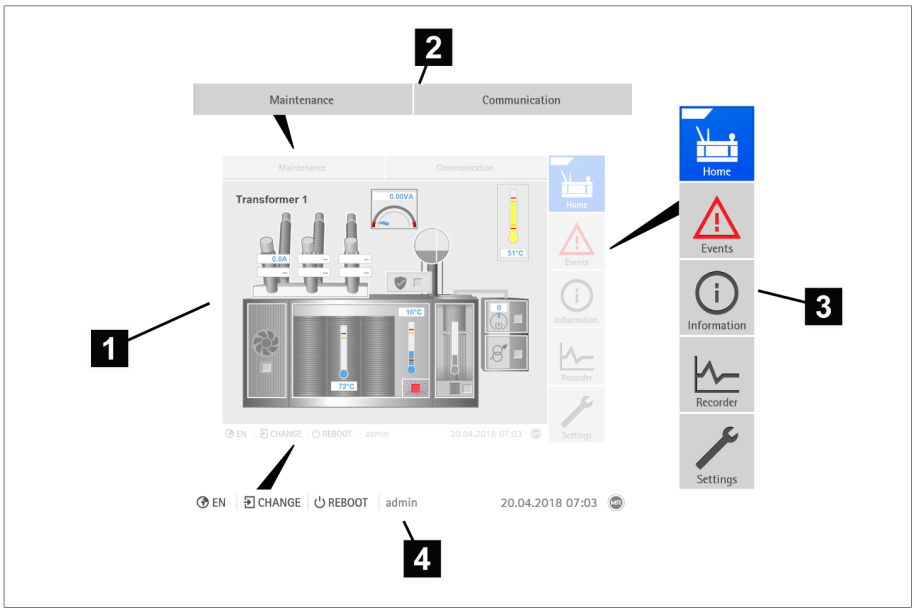

Figure 21: Main screen

1	Display area	2	Secondary navigation
3	Primary navigation	4	Status bar

The most important measured values of the transformer are displayed on the main screen. The individual status displays of the transformer shown can be selected directly when accessing them via the web browser. They act as links to the corresponding menu items. If you are operating the device via the front panel, you are only able to call up the elements via the Information menu.

If the device does not have one of the optional functions, this will be indicated in the main screen via a small padlock 🔒.

Depending on the device configuration, the main screen displays the schematic representation of a transformer for network applications or a transformer for industrial applications.

4.6.1.1 Transformer for network applications

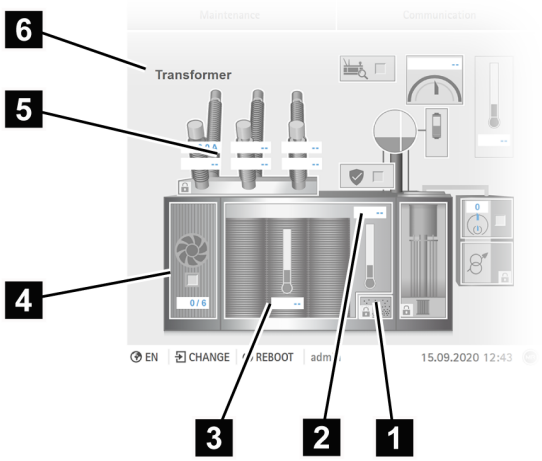

Figure 22: Transformer data

1	DGA (status)	2	Top-oil temperature
3	Hot-spot temperature	4	Cooling system (status)
5	Load current and load voltage of phases L1, L2, L3	6	Transformer name

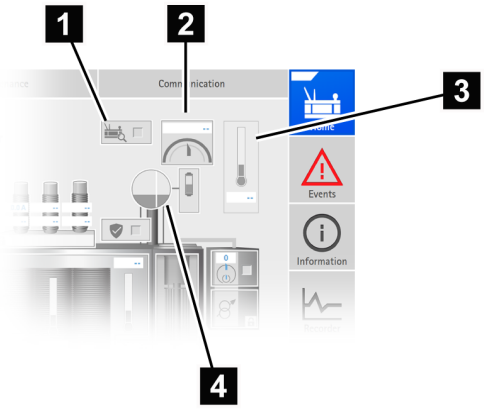

Figure 23: Apparent power, oil level, and ambient temperature

1	Asset intelligence	2	Total apparent power
3	Ambient temperature	4	Oil level (transformer on left, on-load tap-changer on right)

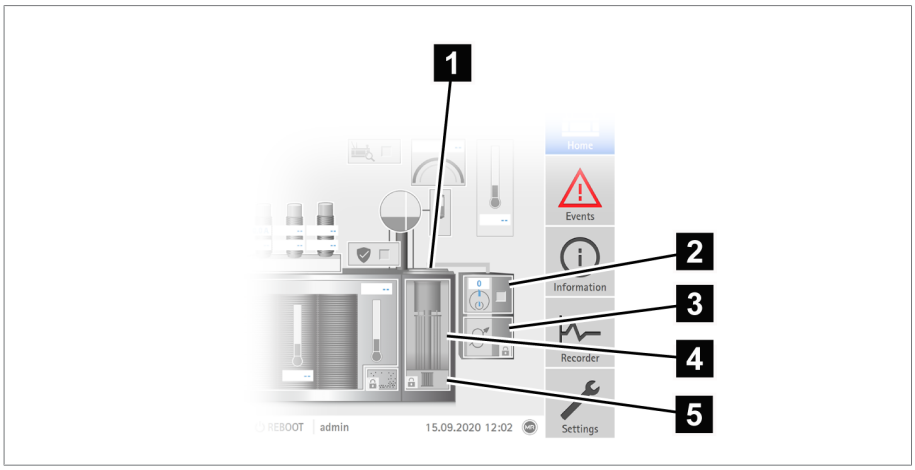

Figure 24: On-load tap-changer and motor-drive unit

1	OLTC oil temperature	2	Current tap position
3	Voltage regulator	4	Tap-change operation statistics
5	OLTC status message (collective message)		

4.6.1.2 Transformer for industrial applications

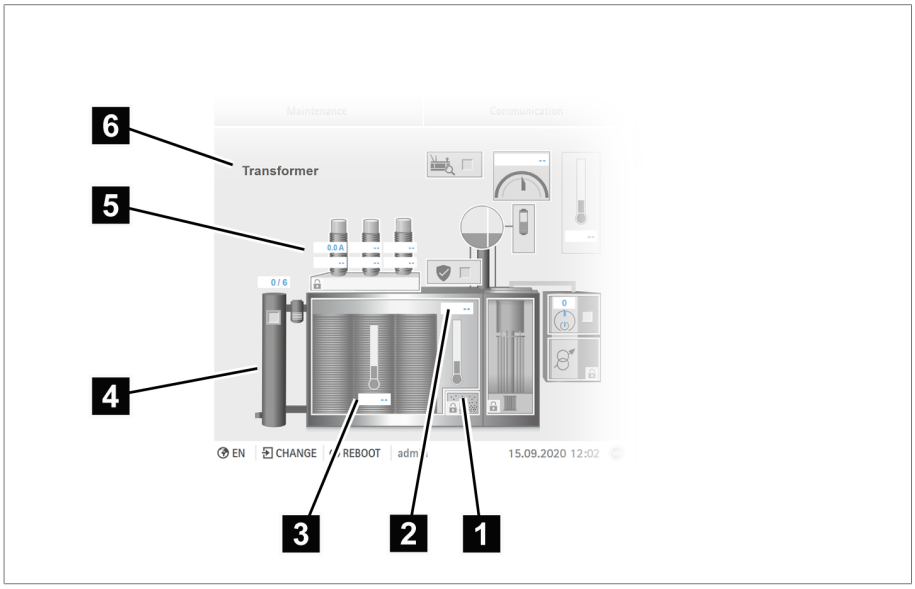

Figure 25: Transformer data

1	DGA (status)	2	Top-oil temperature
3	Hot-spot temperature	4	Cooling system (status)
5	Load current an load voltage of the phases L1, L2, L3 (high-voltage side)	6	Transformer name

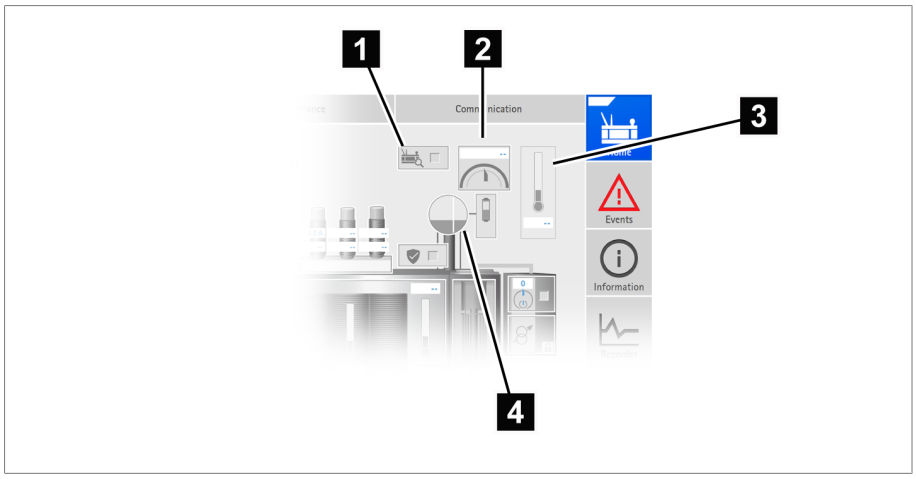

Figure 26: Apparent power, oil level, and ambient temperature

1	Asset intelligence	2	Total apparent power
3	Ambient temperature	4	Oil level (transformer on left, on-load tap-changer on right)

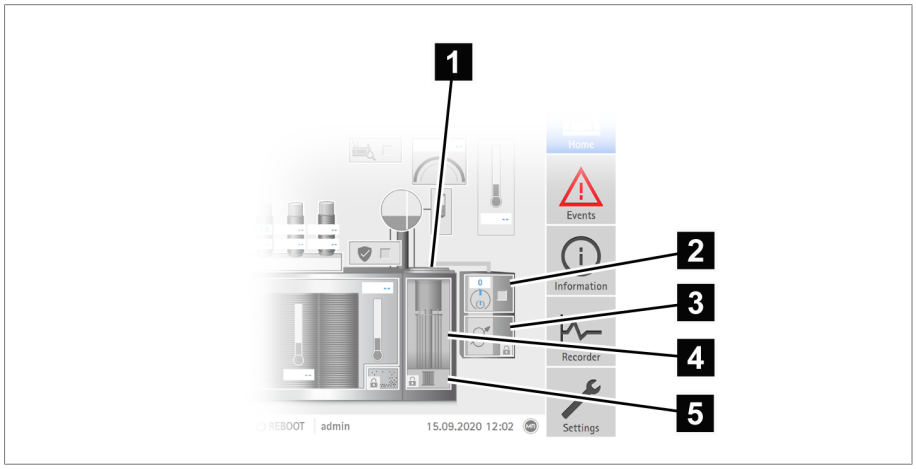

Figure 27: On-load tap-changer and motor-drive unit

1	OLTC oil temperature	2	Current tap position
3	Voltage regulator	4	Tap-change operation statistics
5	OLTC status message (collective message)		

4.6.2 Additional operating controls and display elements when using the MControl touch panel (optional)

If you are using the device with the optionally available MControl touch panel, additional operating controls and display elements are displayed on the left edge of the screen. Depending on the device configuration, a variety of keys are available:

Figure 28: Additional display elements and operating controls

Status	LED status	Status display
REMOTE [1]	REMOTE key	Select the operating mode: ▪ On: REMOTE ▪ Off: LOCAL
AVR AUTO [2]	AVR AUTO key	Activate auto mode.
△ [2]	RAISE key	Send a control command to the motor-drive unit to increase the voltage. Only possible in manual mode.
AVR MANUAL [2]	AVR Manual key	Activate manual mode.
▽ [2]	LOWER key	Send a control command to the motor-drive unit to reduce the voltage. Only possible in manual mode.

[1] Not available if local/remote is toggled using a digital input.

[2] Only available in the "Automatic voltage regulation" function package.

4.6.3 Operating concept

You can operate the device using the web-based ISM™ Intuitive Control Interface visualization via a PC.

User rights and user roles

The device is equipped with a rights system and a roles system. The display and access rights to device settings or events can therefore be controlled at user level.

You can configure the rights system and roles system to meet your requirements. You will find more information on user rights and user roles in the User administration [▶Section 9.34, Page 313] section.

You can only modify the device settings or parameters if you have the necessary user rights.

Logging on, logging off and changing users

The control of access rights to device settings and parameters is user-based. Various users can log in at the same time (e.g. via the visualization) and access the device.

To log in as a user, proceed as follows:

1. Select the **LOGIN** or **CHANGE** button in the status line.
2. Enter your user name and password and select the **OK** button.

⇨ The name of the logged-in user appears in the status line.

To log out as a user, proceed as follows:

► Press the **LOGOUT** button in the status line.

Navigation

If you are operating the device using the web-based visualization, you can navigate by clicking on the appropriate buttons.

Example To navigate to the "Date" parameter, proceed as follows:

1. Go to **Settings**.
2. Go to **Parameters**.
3. Go to **Time synchronization**.
4. Select **Time**.

In these operating instructions, the path for navigating to a parameter is always shown in an abridged form: Go to **Settings > Parameters > Time synchronization**.

Parameter search

You can use the quick search function in the parameter menu to search for a parameter. Enter the name of the desired parameter in the **Search** entry field.

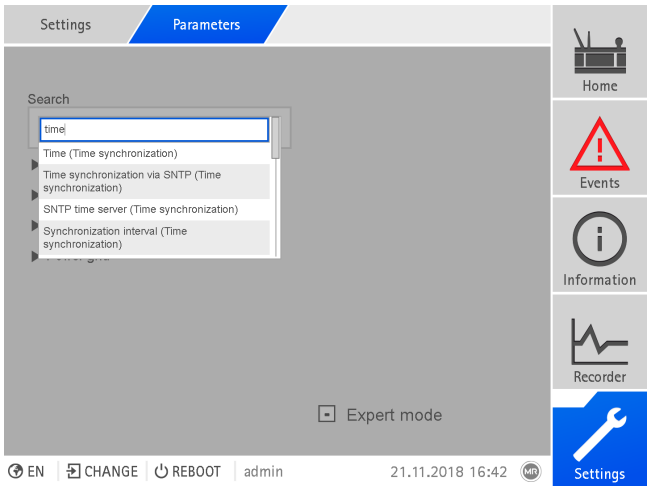

Figure 29: Quick search

Expert mode

The device has an expert mode for entering the parameters. You can enter the parameters directly into the overview screen of the respective menu in this mode.

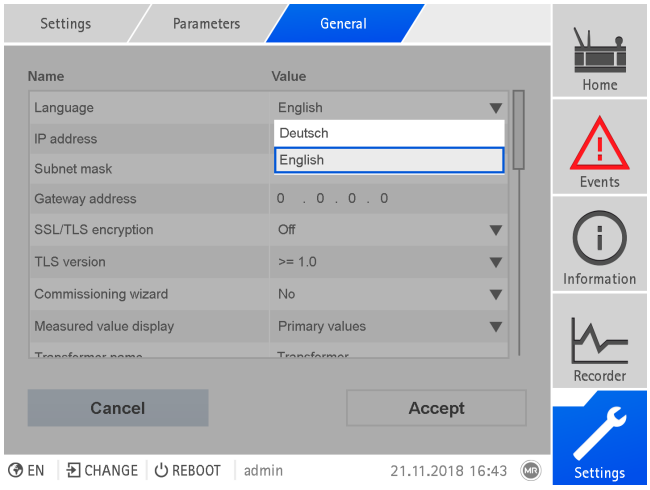

Figure 30: Expert mode

To activate the expert mode, proceed as follows:

1. Go to **Settings > Parameters**.
2. Select the **Expert mode** checkbox.

⇨ Expert mode is active.

Hiding/showing parameters

Depending on how you set the parameters, the device will hide or show additional parameters related to this function.

5 Packaging, transport and storage

5.1 Packaging

The products are sometimes supplied with sealed packaging and sometimes in a dry state, depending on requirements.

Sealed packaging surrounds the packaged goods with plastic foil on all sides.

Products that have also been dried are identified by a yellow label on the sealed packaging. In the dry state, delivery is also possible in a transport container.

The information in the following sections should be applied as appropriate.

5.1.1 Suitability

NOTICE **Property damage due to incorrectly stacked crates!**

Stacking the crates incorrectly can lead to damage to the packaged goods.

- ► The outer marking on the packaging states if, for example, the on-load tap-changer or selector has been packed upright. Never stack these crates.
- ► General rule: Do not stack crates above a height of 1.5 m.
- ► For other crates: Only stack up to 2 equally sized crates on top of one another.

The packaging is suitable to ensure undamaged and fully functional means of transportation in compliance with local transportation laws and regulations.

The packaged goods are packed in a sturdy crate. This crate ensures that, when in the intended transportation position, the packaged goods are stabilized to prevent impermissible changes in position, and that none of the parts touch the loading surface of the means of transport or touch the ground after unloading.

Sealed packaging surrounds the packaged goods with plastic foil on all sides. The packaged goods are protected from humidity using a desiccant. The plastic foil was bonded after the desiccant is added.

5.1.2 Markings

The packaging bears a signature with instructions for safe transport and correct storage. The following symbols apply to the shipment of non-hazardous goods. Adherence to these symbols is mandatory.

	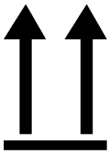			
Protect against moisture	Top	Fragile	Attach lifting gear here	Center of mass

Table 17: Shipping pictograms

5.2 Transportation, receipt and handling of shipments

⚠ WARNING

Danger of death or severe injury!

Danger of death or serious injuries due to tipping or falling load.

- ► Only transport the crate when closed.
- ► Do not remove the securing material used in the crate during transport.
- ► If the product is delivered on a pallet, secure it sufficiently.
- ► Only trained and authorized persons may select the sling gear and secure the load.
- ► Do not walk under the suspended load.
- ► Use means of transport and lifting gear with a sufficient carrying capacity in accordance with the weight stated on the delivery slip.

In addition to oscillation stress, jolts must also be expected during transportation. In order to prevent possible damage, avoid dropping, tipping, knocking over and colliding with the product.

If a crate tips over, falls from a certain height (e.g. when slings tear) or is subject to an unbroken fall, damage must be expected regardless of the weight.

Every delivered shipment must be checked for the following by the recipient before acceptance (acknowledgment of receipt):

- Completeness based on the delivery slip
- External damage of any type

The checks must take place after unloading when the crate or transport container can be accessed from all sides.

Visible damage

If external transport damage is found upon receipt of the shipment, proceed as follows:

- Immediately record the identified transport damage in the shipping documents and have this countersigned by the carrier.
- In the event of severe damage, total loss or high damage costs, immediately notify the manufacturer and the relevant insurance company.
- After identifying damage, do not modify the condition of the shipment further and retain the packaging material until an inspection decision has been made by the transport company or the insurance company.
- Record the details of the damage immediately on site together with the carrier involved. This is essential for any claim for damages.
- Photograph damage to packaging and packaged goods. This also applies to signs of corrosion on the packaged goods due to moisture inside the packaging (rain, snow, condensation).
- ***NOTICE!*** Damage to packaged goods due to damaged sealed packaging. If the product is delivered in sealed packaging, check the sealed packaging immediately. If the sealed packaging is damaged, do not under

any circumstances install or commission the packaged goods. Either re-dry the dried packaged goods as per the operating instructions, or contact the manufacturer to agree on how to proceed.

- Identify the damaged parts.

Hidden damage

When damages are not determined until unpacking after receipt of the shipment (hidden damage), proceed as follows:

- Make the party responsible for the damage liable as soon as possible by telephone and in writing, and prepare a damage report.
- Observe the time periods applicable to such actions in the respective country. Inquire about these in good time.

With hidden damage, it is very hard to make the transportation company (or other responsible party) liable. Any insurance claims for such damages can only be successful if relevant provisions are expressly included in the insurance terms and conditions.

5.3 Storage of shipments

Packaged goods dried by Maschinenfabrik Reinhausen

Upon receipt of the shipment, immediately remove the packaged goods dried by Maschinenfabrik Reinhausen from the sealed packaging and store air-tight in dry insulating fluid until used if the packaged goods were not supplied in insulating fluid.

Non-dried packaged goods

Non-dried packaged goods with functional sealed packaging can be stored outdoors when the following conditions are complied with.

When selecting and setting up the storage location, ensure the following:

- Protect stored goods against moisture (flooding, water from melting snow and ice), dirt, pests such as rats, mice, termites and so on, and against unauthorized access.
- Store the crates on timber beams and planks as a protection against rising damp and for better ventilation.
- Ensure sufficient carrying capacity of the ground.
- Keep entrance paths free.
- Check stored goods at regular intervals. Also take appropriate action after storms, heavy rain or snow and so on.

Protect the packaging foil from direct sunlight so that it does not disintegrate under the influence of UV rays, which would cause the packaging to lose its sealing function.

If the product is installed more than 6 months after delivery, suitable measures must be taken without delay. The following measures can be used:

- Correctly regenerate the drying agent and restore the sealed packaging.
- Unpack the packed goods and store in a suitable storage space (well ventilated, as dust-free as possible, humidity < 50% where possible).

Storing the product in particularly low ambient temperatures

If you want to store the product in ambient temperatures lower than the permissible storage temperature, you must ensure that the internal heater is in continuous operation. To do so, connect the heater via the optional emergency heating plug device in the baseboard (terminal X29) to the power supply.

5.4 Unpacking shipments and checking for transportation damages

- ***NOTICE!*** Transport the packaged crate to the place where the packaged goods will be installed. Do not open the sealed packaging until just before installation. Otherwise, damage to the packaged goods may occur due to ineffectively sealed packaging.
- **⚠ WARNING!** When unpacking, check the condition of the packaged goods. Place the packaged goods in an upright crate and protect them from tipping out. Otherwise, the packaged goods may become damaged and serious injuries may result.
- Check the completeness of the accessories kit based on the delivery slip.

Attachment points for lifting gear

⚠ WARNING

Danger of death and damage to property!

Danger of death and damage to property due to tipping or falling load!

▶ Only trained and authorized persons may select the sling gear and secure the load.

▶ Do not walk under the suspended load.

▶ Use means of transport and lifting gear with a sufficient carrying capacity in accordance with the weight stated in the Technical data [▶Section 15, Page 366] section.

- **⚠ WARNING!** Serious injuries and damage to the control cabinet due to falling load. Use all 4 but at least 2 diagonally opposing transport lugs. Turn the transport lugs to face the lifting gear. Attach the lifting gear so that the cable angle is always less than 45° in relation to the vertical.

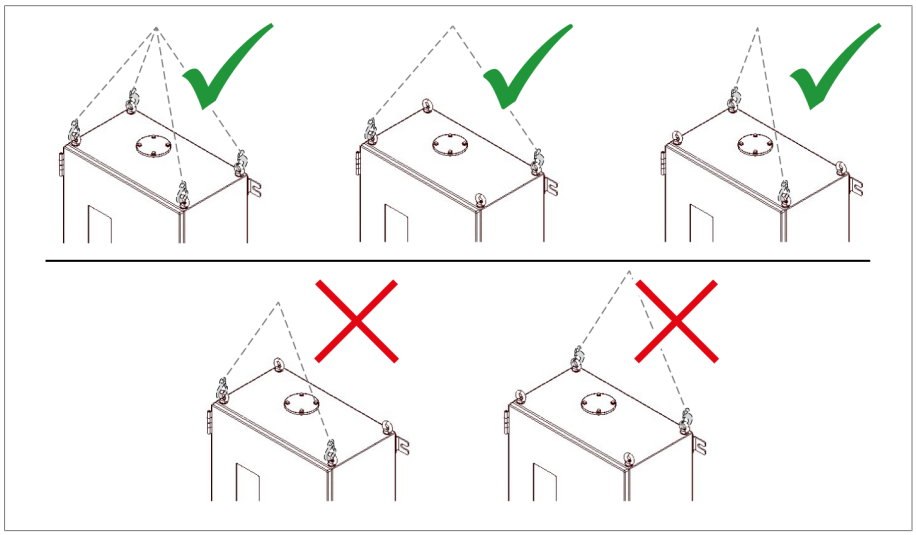

Figure 31: Transport lugs for lifting gear

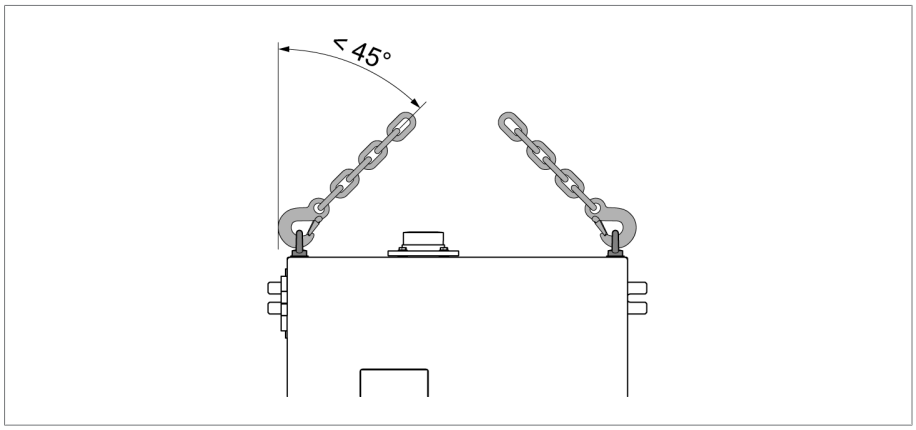

Figure 32: Maximum permissible cable angle for the lifting gear limit stop of the control cabinet

- **⚠ WARNING!** Serious injuries due to the control cabinet tipping and damage to the cable gland if the control cabinet is set down, transported or stored upright. Only set down, transport and store the control cabinet on its back.
- Only remove the control cabinet from the crane once it has been fully connected to the transformer.
- Lift the gear motor using a slip around the gear motor

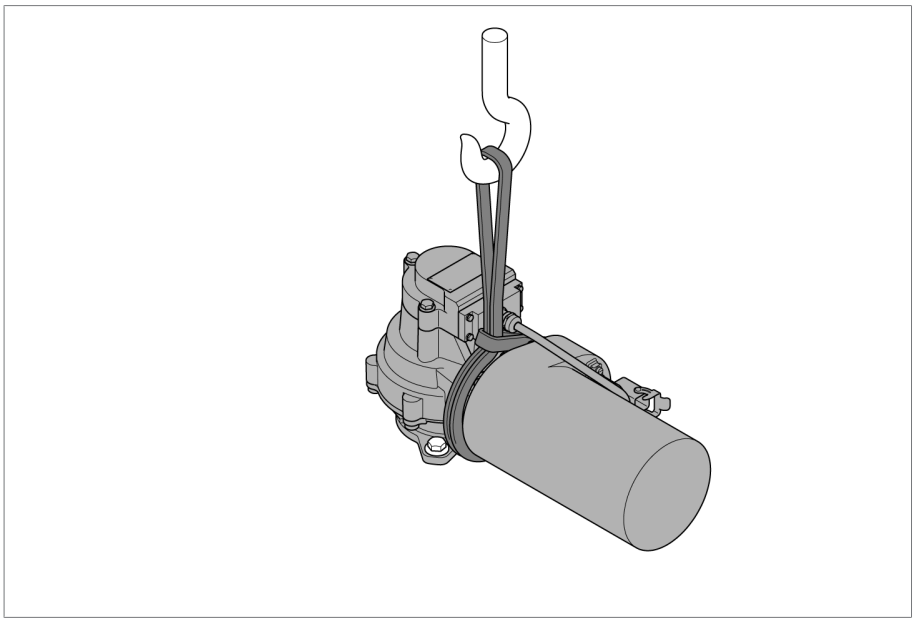

Figure 33: Slip for lifting the gear motor

6 Mounting

This chapter describes how to correctly install and connect the device.

⚠ WARNING

Danger of death or severe injury!

An energized transformer and energized on-load tap-changer components can cause death or serious injuries during installation of the drive!

► Ensure the de-energized state of the transformer and on-load tap-changer components during installation of the drive.

6.1 Preparatory work

⚠ WARNING

The motor-drive unit may be started by accident if the motor protective switch is not tripped!

Risk of injury from starting the motor-drive unit by accident!

► Trip the motor protective switch before starting to fit the drive shafts.

NOTICE

Damage to on-load tap-changer and motor-drive unit due to incorrect operation!

The on-load tap-changer and motor-drive unit are shipped on separate pallets in the neutral position. Prior to assembly check the serial numbers of the on-load tap-changer and motor-drive unit to ensure they belong together.

If the on-load tap-changer and motor-drive unit are not connected, mechanical damage will result from both the drive shaft of the on-load tap-changer turning and the output shaft of the motor-drive unit turning!

✓ Prior to shipment the on-load tap-changer is locked in the neutral position by a cotter pin. This cotter pin is inserted through the hub and drive shaft extension on the bottom of the tank. It may only be removed just before assembly. Keep the cotter pin.

► Check the neutral position on the on-load tap-changer and motor-drive unit as described below.

► Only join shafts that have been perfectly aligned.

► If you detect deviations, contact Reinhausen Manufacturing.

6.1.1 Checking the neutral position of the on-load tap-changer

Check the on-load tap-changer's neutral position with the door open as follows:

1. Both change-over selector contacts are in the top position.

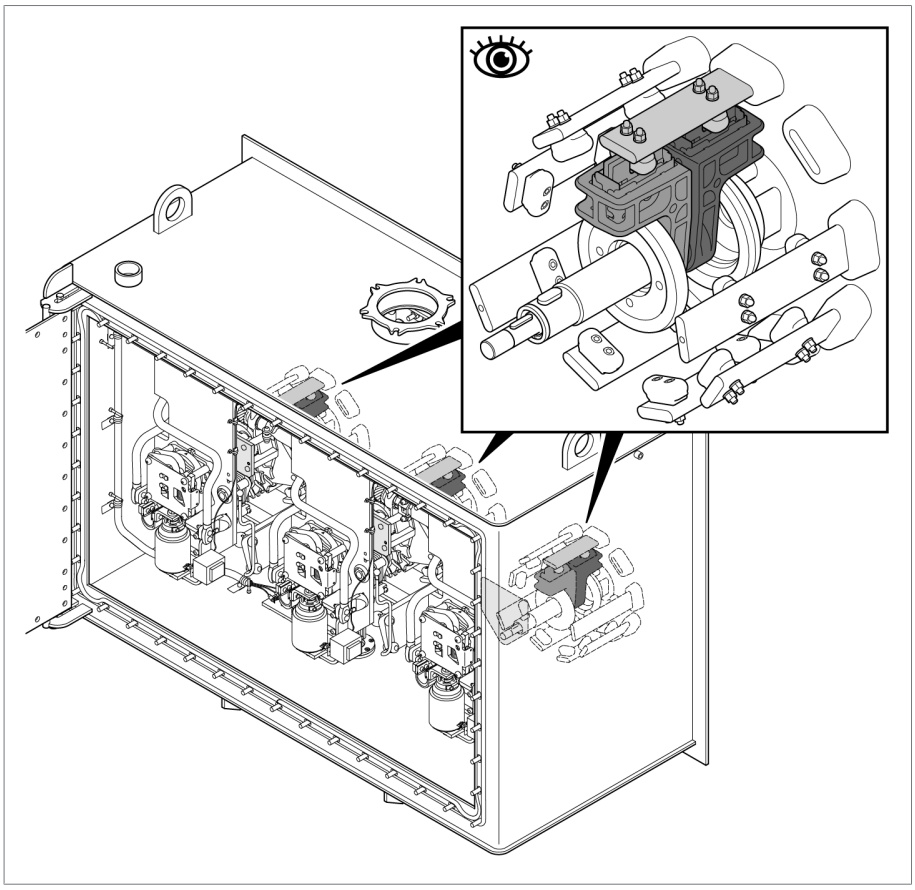

Figure 34: Change-over selector contacts

2. The adjustment markings on the by-pass switch are aligned to one another.

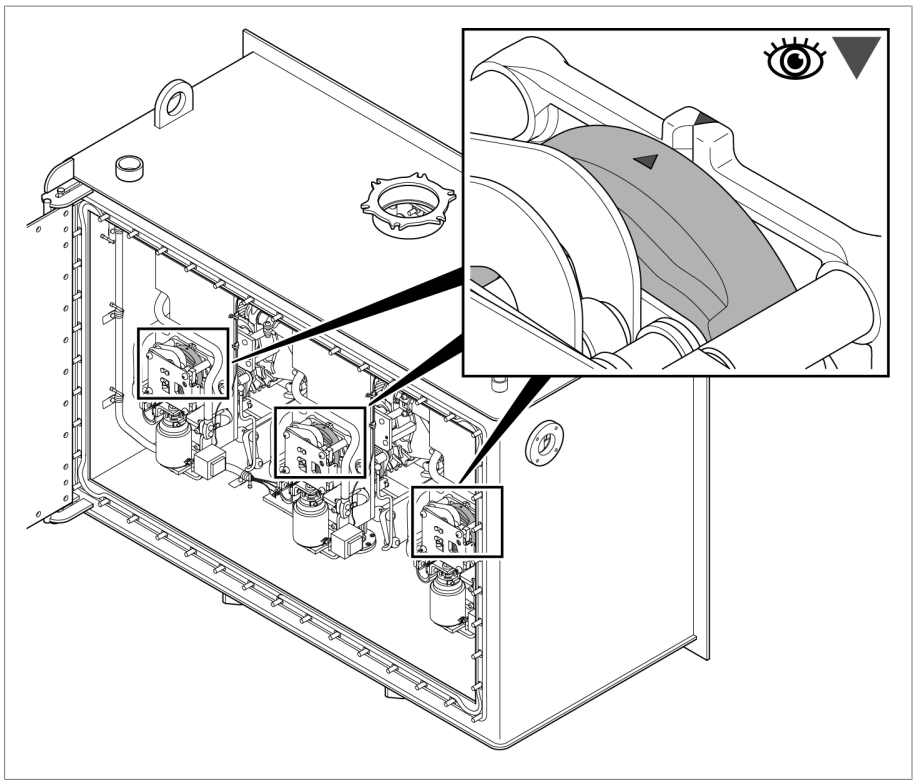

Figure 35: Adjustment markings

6.2 Mounting the gear motor

1. **NOTICE!** Remove the locking bolts on the on-load tap-changer for securing the neutral position. Otherwise, the on-load tap-changer and motor-drive unit may become damaged.
2. Ensure that the feather key on the on-load tap-changer drive shaft is in the following position.

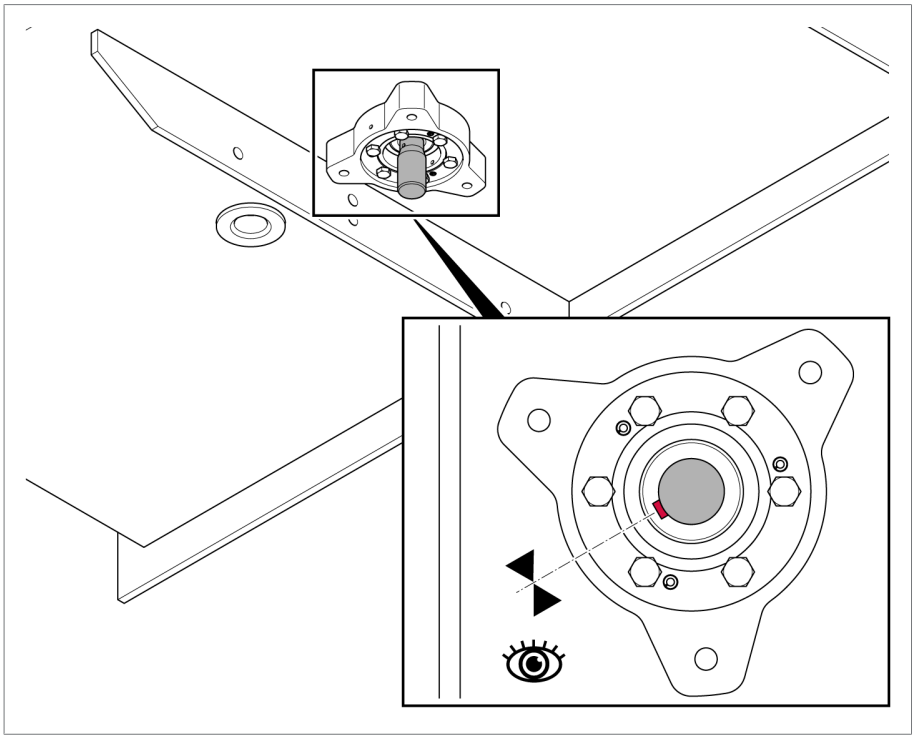

Figure 36: Position of the on-load tap-changer drive shaft

3. **⚠ WARNING!** Secure the gear motor against falling off using a lifting device. Otherwise, the gear motor may become damaged and serious injuries may result.
4. Place the gear motor onto the on-load tap-changer using a lifting device.

5. Tighten the fixing screws (3x M12) with a tightening torque of 46 ± 4 ft lb (62 ± 6 Nm).

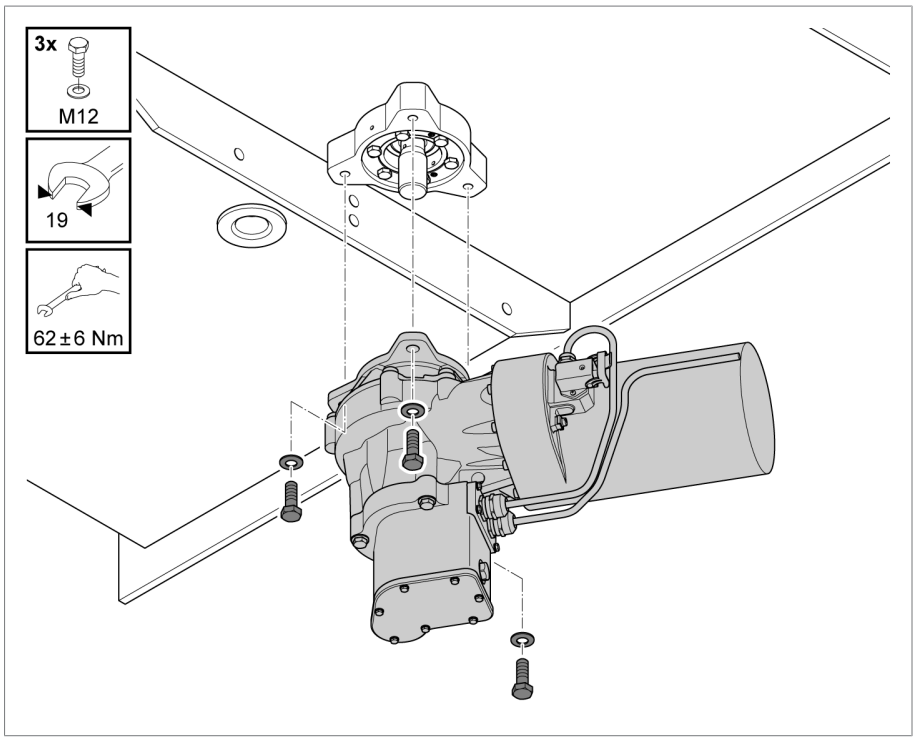

Figure 37: Mounting the gear motor

6.3 Fitting the control cabinet to the transformer

Alternatively, you can secure the control cabinet to another point away from the transformer. The included connection cable between the control cabinet and the gear motor is 6.5 m (21.3 ft) long. If required, you can contact Maschinenfabrik Reinhausen GmbH for other lengths.

The control cabinet has four fixing attachments on the rear to secure it.

1. Attach four stud bolts (not supplied by MR) to the transformer tank. Recommended clearance between the control cabinet and floor is approx. 0.5…1 m.

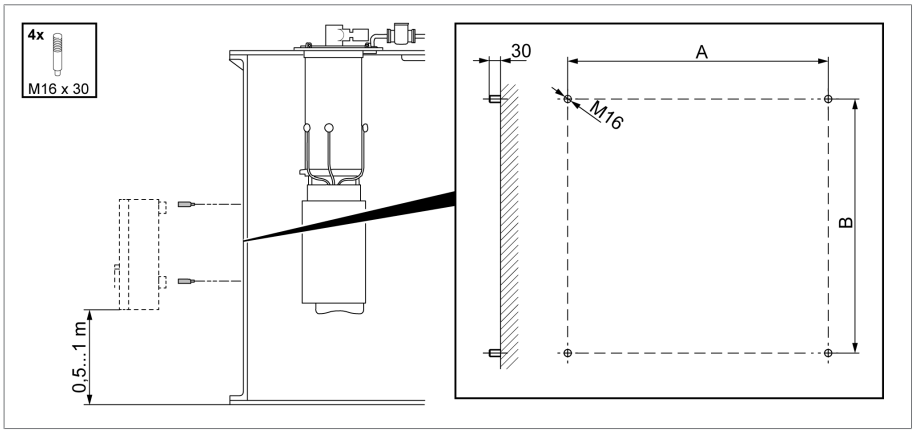

Figure 38: Fastening the stud bolts

A	715 ± 2 mm (28.15 ± 0.08 in)	B	750 ± 2 mm (29.53 ± 0.08 in)

2. For control cabinets with vibration damper: Attach the inner bracket to the control cabinet. Attach the outer bracket to the transformer wall. The complete contact surfaces of the brackets must be in contact.

- **⚠ WARNING!** Serious injuries and damage to the control cabinet due to falling load. Use all 4 but at least 2 diagonally opposing transport lugs. Turn the transport lugs to face the lifting gear. Attach the lifting gear so that the cable angle is always less than 45° in relation to the vertical.

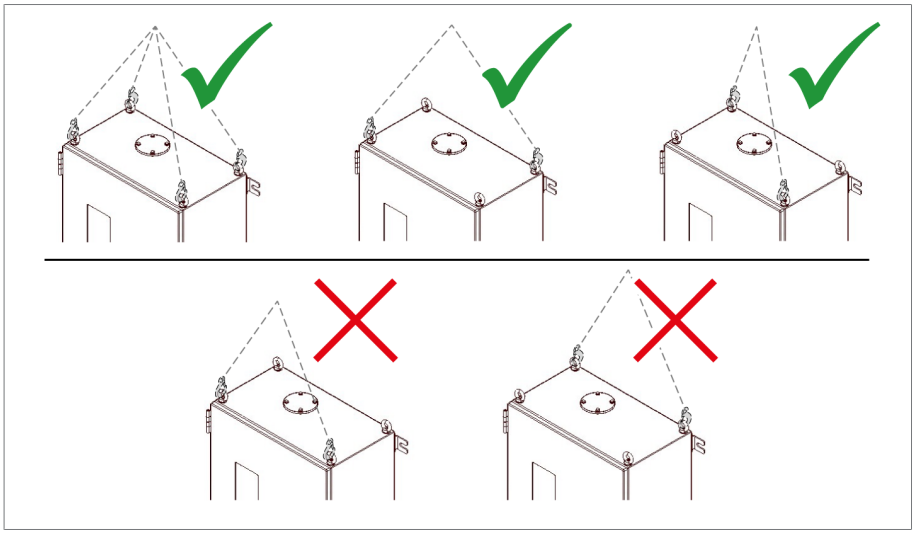

Figure 39: Transport lugs for lifting gear

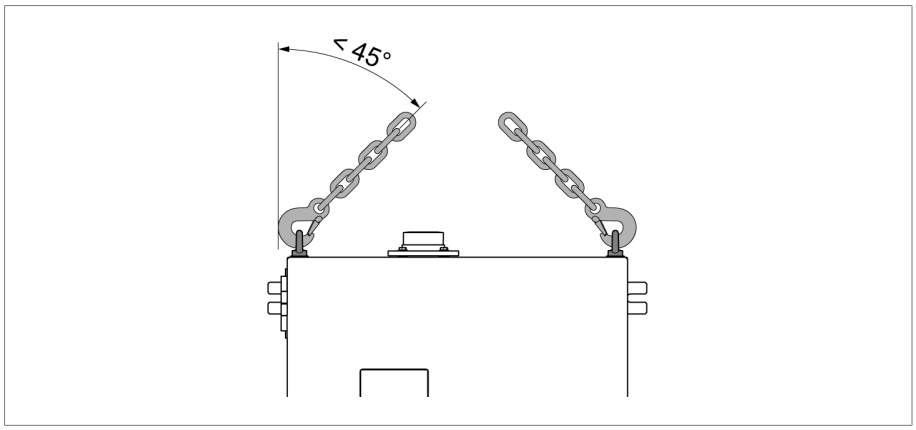

Figure 40: Maximum permissible cable angle for the lifting gear limit stop of the control cabinet

1. Use the fixing attachments to attach the control cabinet to the stud bolts and align it vertically on the transformer tank.

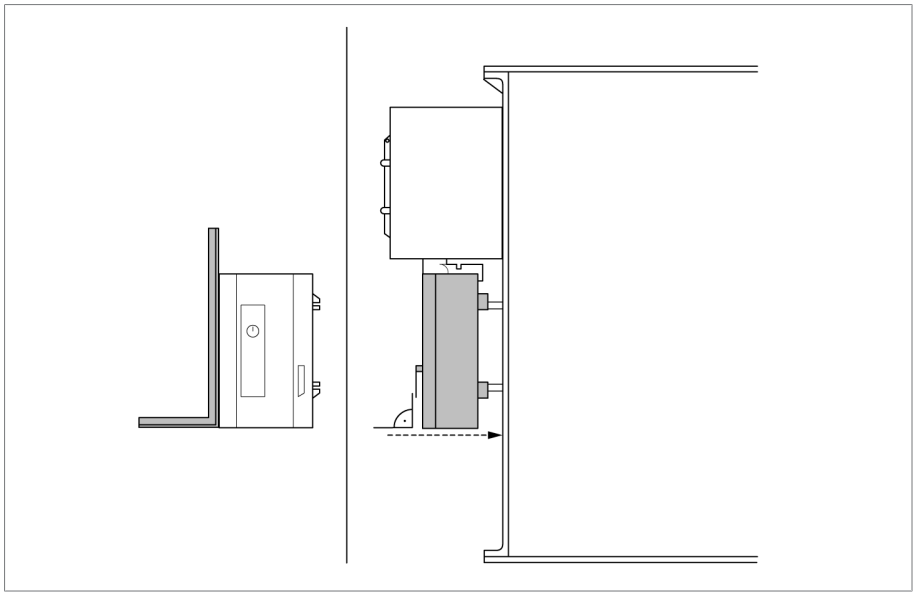

Figure 41: Attaching the control cabinet

2. **NOTICE!** Damage to the control cabinet due to mechanical tension if the offset to the plane is greater than 5 mm. The offset must be compensated using washers. Secure the control cabinet without subjecting it to mechanical tension.

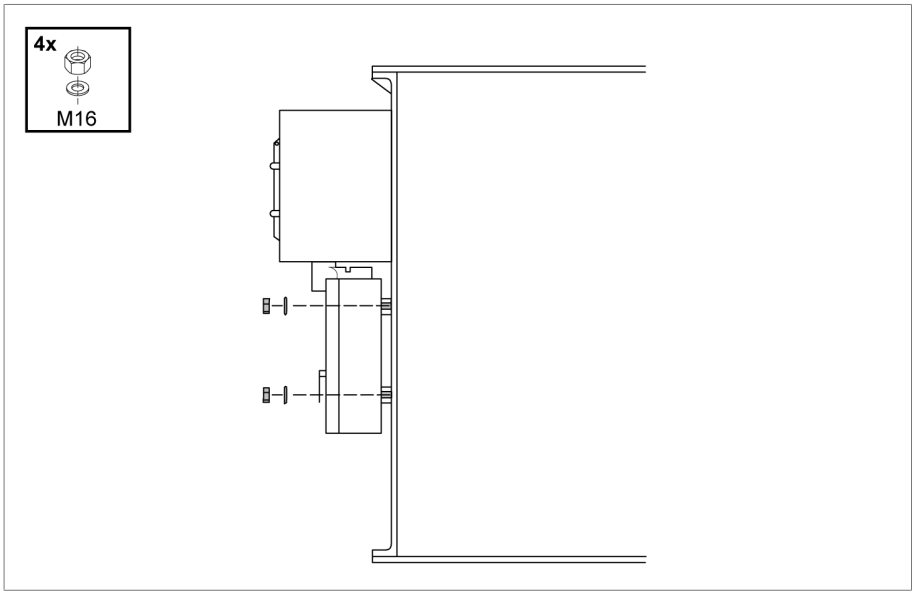

Figure 42: Securing the drive

3. Connect the grounding cable to the control cabinet and transformer tank.

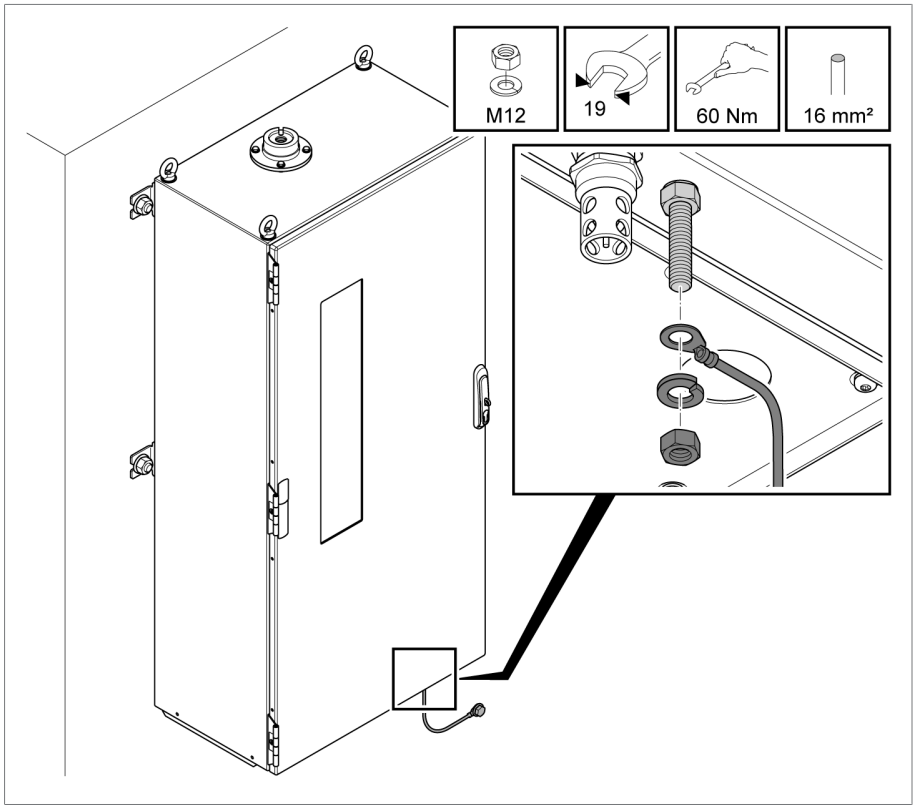

Figure 43: Connecting the grounding cable to the control cabinet

6.4 Connecting the gear motor

NOTICE

Damage to the connecting cable!

Damage to the connecting cable due to impermissibly small bending radii and kinks.

- ► When routing the connection cable, observe the minimum bending radiuses: min. 51 mm for fixed routing, min. 170 mm if moved occasionally.
- ► When routing the connection cable, make sure that the maximum permitted cable jacket temperature of 80°C is not exceeded during operation.

To connect the gear motor, proceed as follows:

✓ The control cabinet is installed at the desired location.

✓ Use only the specified cables for wiring. Note cable recommendation.

1. Remove and dispose of the transport protective cap for the plug connector of the gear motor.
2. Connect the connection cable provided to the plug connector of the gear motor. Connect the other end of the connection cable to the terminal in the control cabinet in accordance with the connection diagram provided.

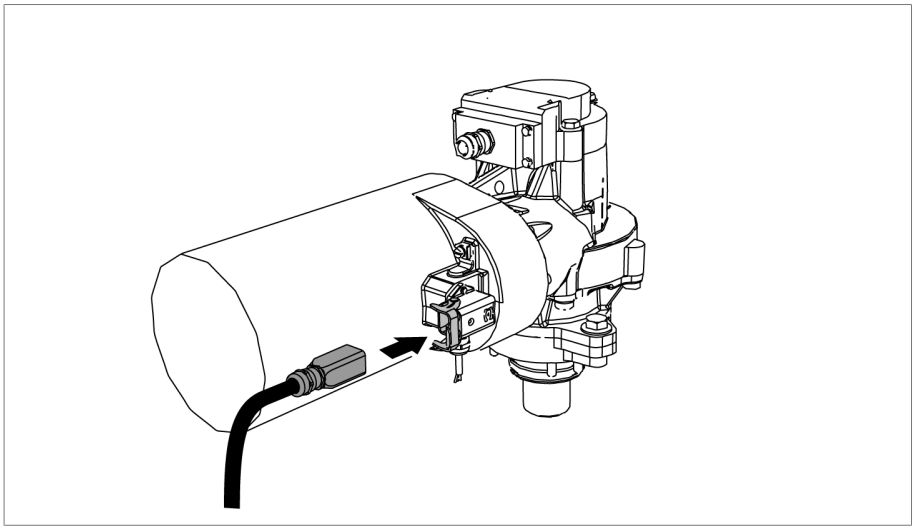

Figure 44: Connecting the connection cable to the gear motor

3. Connect the grounding cable to the ground connection of the gear motor and connect it to the ground connection on the on-load tap-changer head or transformer.

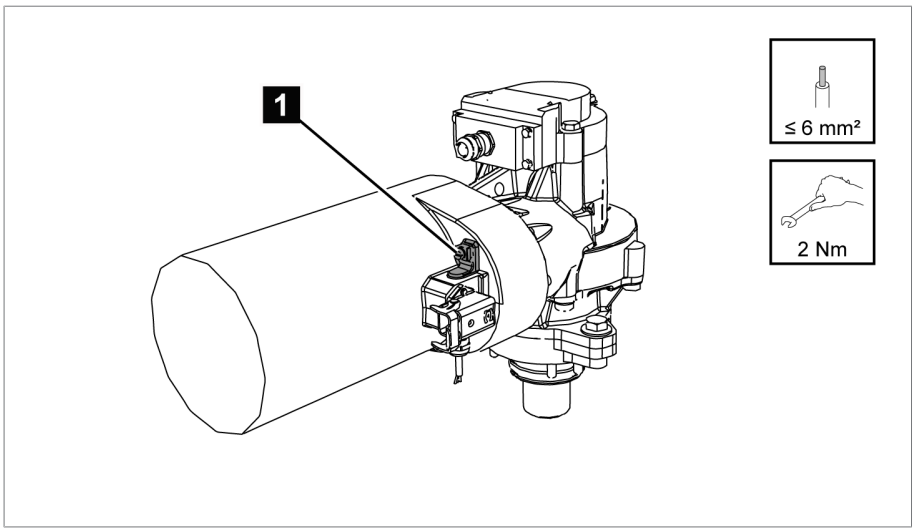

Figure 45: Connection of the grounding cable on the grounding bar of the gear motor

1	Grounding bar

4. Place the cable shield on the grounding bar of the control cabinet using the clamping bracket.

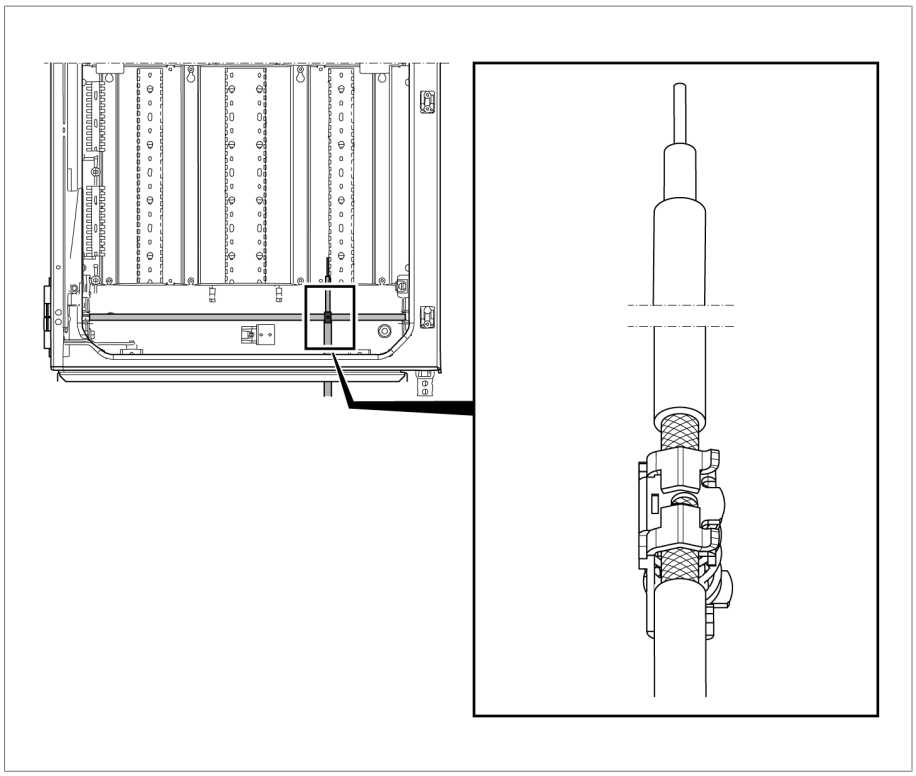

Figure 46: Place the cable shield with clamping bracket on the grounding bar of the control cabinet.

5. Connect the rotary encoder connection cable to the terminal in the control cabinet in accordance with the connection diagram provided.
6. Connect the shield of the connection cable (rotary encoder) provided using shielded clamps to the grounding bar in the control cabinet.

6.5 Connecting the monitoring system (VIM)

1. Insert the connection cable in the socket on the bottom of the on-load tap-changer.

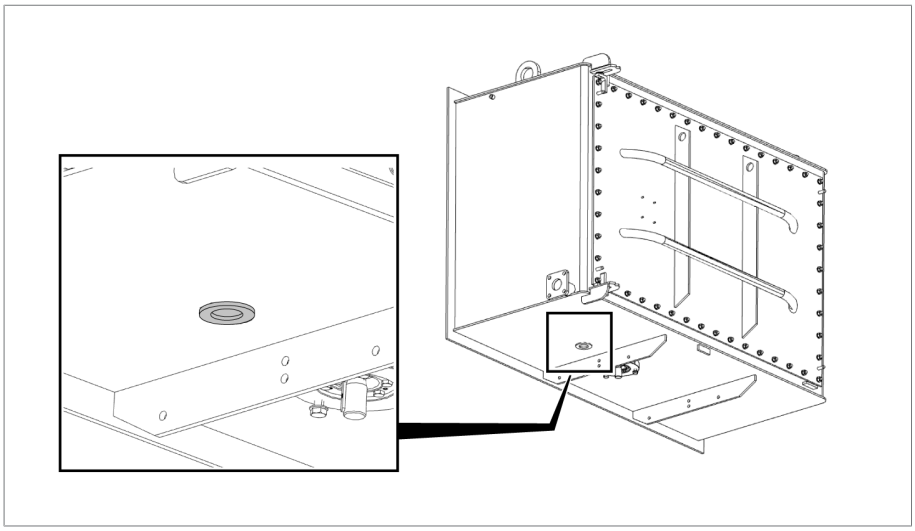

Figure 47: Connection socket for monitoring system (VIM)

2. Connect the connection cable to the terminal in the control cabinet in accordance with the connection diagram.

6.6 Connecting the control cabinet

NOTICE

Damage to the device!

Current flow through the shielding of signal lines can cause the device to become damaged.

► Use potential equalization to ensure that the control cabinet and transformer are on the same potential and connect the shielding of the signal lines on both ends.

► If potential equalization cannot be assured, only connect the shielding of the signal lines in the control cabinet. In this case, the effectiveness of the shielding against interference is reduced.

To connect the control cabinet, proceed as follows:

✓ Observe information in the following chapters.

✓ Observe the connection diagrams in the document pouch.

1. Connect the signal lines in accordance with the connection diagram.
2. Connect the power supply in accordance with the connection diagram.

6.6.1 Cable recommendation

Please note the following Maschinenfabrik Reinhausen GmbH recommendation when wiring the device.

- Electromagnetic interference on signal lines, which can be expected due to the transformer's surroundings, can disrupt the proper operation of the device.
- Where possible, route signal lines with shielding.
- Excessive line capacitance can prevent the relay contacts from interrupting the contact current. In control circuits operated with alternating current, take into account the effect of the line capacitance of long control cables on the function of the relay contacts.
- If you want to route Ethernet connections from a control cabinet or building, we recommend using fiber-optic cables (in accordance with the IEC 61850-90-4 recommendation).
- Ensure that the copper cables used have a temperature resistance of 70°C.

Cable	Assembly	Cable type	Conductor cross-section	Conductor material	Max. length
Voltage measurement	UI 1, UI 3, UI 5-4	Shielded	2.5 mm²	Copper	-
Current measurement	UI 1, UI 3, UI 5-4	Unshielded	4 mm²	Copper	-
Signal inputs	DIO 28-15, DIO 42-20	Shielded	1.5 mm^2	Copper	400 m (<25 Ω/km)
Signal outputs	DIO 28-15, DIO 42-20	Shielded	1.5 mm^2	Copper	-
Signal inputs	AIO 2, AIO 4, AIO 8	Shielded	1 mm^2	Copper	400 m (<25 Ω/km)
Signal outputs	AIO 2, AIO 4, AIO 8	Shielded	1 mm^2	Copper	-
RS232, SUB-D	CPU I, CPU II	Shielded	0.25 mm^2	-	25 m
RS485; SUB-D	CPU I, CPU II	Shielded	0.25 mm^2	-	140 m
CAN bus	CPU I	Shielded	0.75 mm²	-	2,000 m (total CAN bus)
Ethernet RJ45	CPU I	Min. CAT5, shielded S/FTP	-	-	100 m
Ethernet FO	MC 2-2, SW 3-3	Duplex LC Multimode, OM3, 1310 nm	-	-	2000 m

Table 18: Recommendation for connection cables

6.6.2 Cable bushing in the base plate of the control cabinet

Depending on the configuration, the product can be equipped with different types of cable bushings in the base plate of the control cabinet. Observe the instructions described below for handling.

6.6.2.1 Base plate with Roxtec CF32 cable bushing

The base plate is equipped with a cable bushing of type Roxtec CF32.

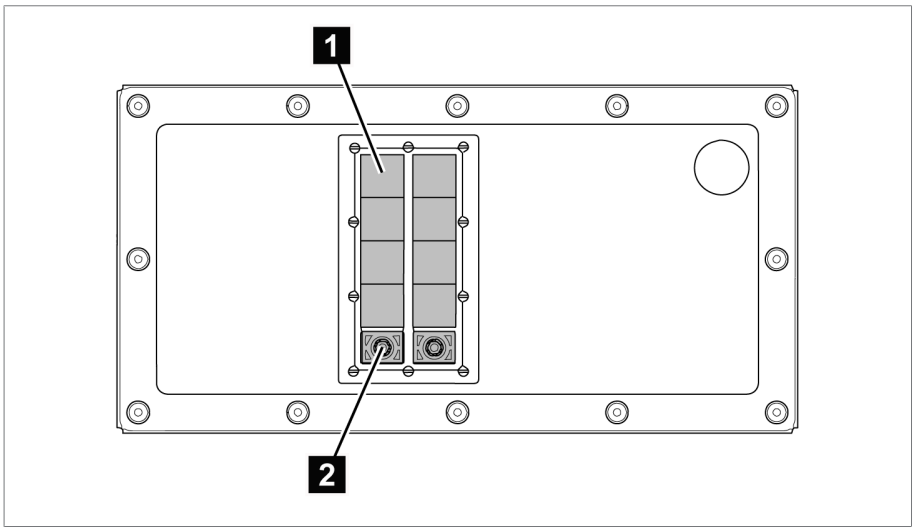

Figure 48: Base plate with Roxtec CF32 cable bushing

1	Dummy plug	2	Terminal module

The following parts are included:

- Prepress tool for CF8/32
- Lubricant to grease the sealing module
- 14x sealing module CM 20w40 for two cables with a diameter of 3.5...16.5 mm
- 1x sealing module CM 40 10-32 for one cable with a diameter of 9.5...32.5 mm
- Installation instructions

You will find more information on handling the cable bushing on the manufacturer website (www.roxtec.com).

To feed through the cable, proceed as follows. Also follow the included installation instructions.

1. Unscrew the nut and remove the terminal module.
2. Remove the required number of dummy plugs.
3. Clean the installation frame and then grease it with the lubricant.
4. Feed in the cable through the installation frame.
5. Remove the inserts of the sealing module so that the distance between the two parts of the sealing module is 0.1...1 mm when the cable is inserted.
6. Grease the sealing module with the lubricant on all sides.

7. Mount both parts of the sealing module with the cable in the installation frame. If there is more than one sealing module, start with the largest.
8. Press the sealing modules together with the prepress tool to then be able to insert the terminal module.
9. Insert the terminal module.
10. Tighten the nut of the terminal module with a tightening torque of 8...12 Nm.

6.6.2.2 Base plate with metric cable glands

The base plate is equipped with holes for metric cable glands. The cable glands are optionally included depending on your order. If you would like to use your own cable glands, then follow the installation instructions of the cable gland manufacturer.

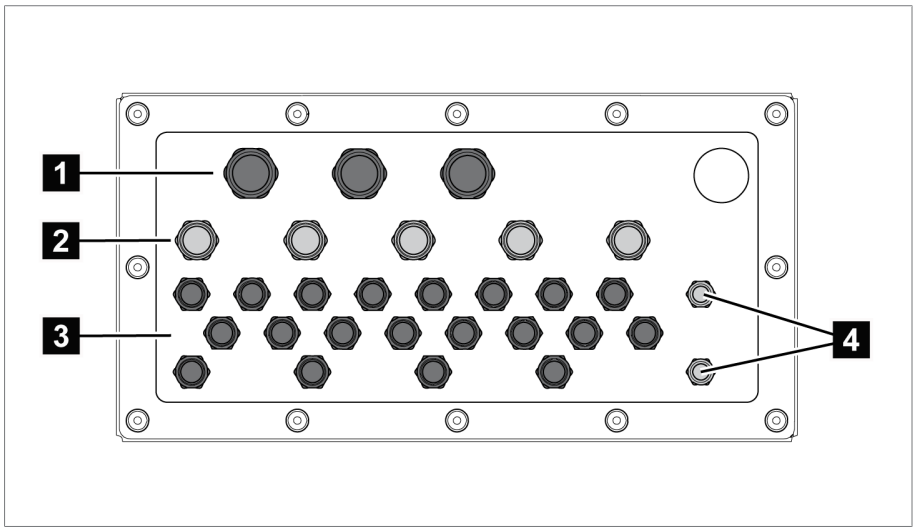

Figure 49: Base plate with metric cable gland

1	3x M40	2	5x M32
3	20x M25	4	2x M20

Mounting your own cable bushings

Mount the cable bushings based on the instructions from the manufacturer.

⚠ WARNING

Electric shock!

Cable bushings made of metal may carry current in the event of a fault and could cause an electric shock when touched. They must therefore be effectively connected to the protective ground of the control cabinet.

► Connect metal cable bushings to the control cabinet in an electrically conductive manner. To do so, use toothed lock washers for the screw connection on the inside of the control cabinet or remove the paint on the inside of the control cabinet around the hole.

Mounting cable bushings (optionally included)

Note that the degree of protection of the control cabinet is reduced if the cable glands have a lower degree of protection than IP66. Information on the degree of protection of the included cable glands can be found in the corresponding dimensional drawing.

Nominal size	Width across flat *A*	Tightening torque *x*	
		Plastic	Stainless steel
M20	25	6 Nm	8 Nm
M25	30	8 Nm	10 Nm
M32	36	10 Nm	20 Nm
M40	46	13 Nm	20 Nm

Table 19: Tightening torque for included intermediate supports and cap nuts

To feed through the cable, proceed as follows:

1. Remove the blank cover using a screwdriver; hold against the hexagon nut inside of the control cabinet using an open-end wrench when doing so.

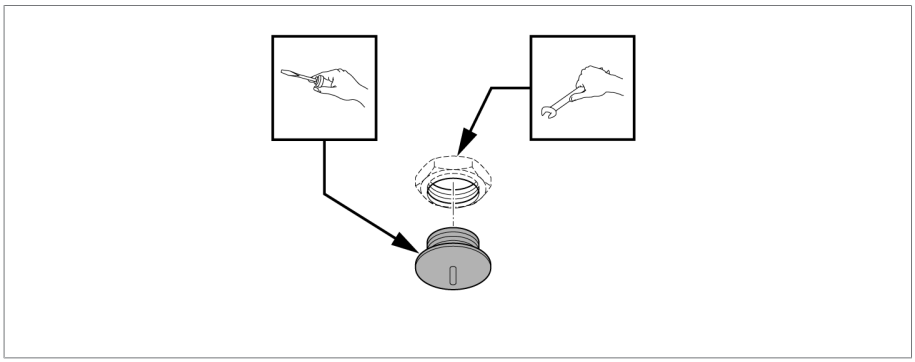

Figure 50: Removing the blank cover

2. Mount the intermediate supports and screw in with the tightening torque according to the table mentioned above.

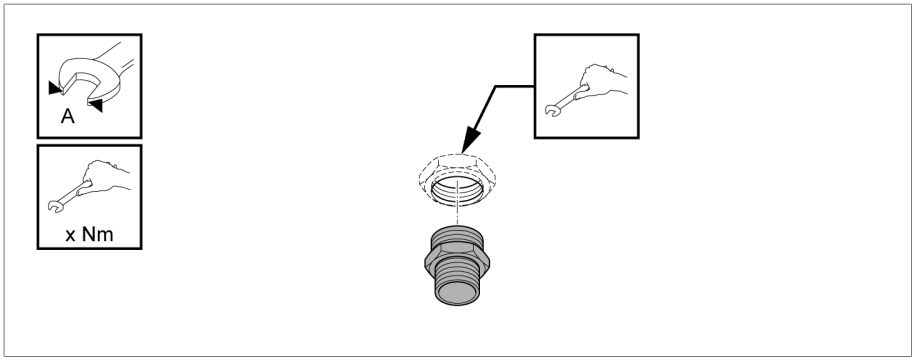

Figure 51: Mounting the intermediate supports

3. Thread the cap nut onto the cable.

4. Pull the cable through the bushing and the cap nut with the tightening torque according to the table mentioned above.

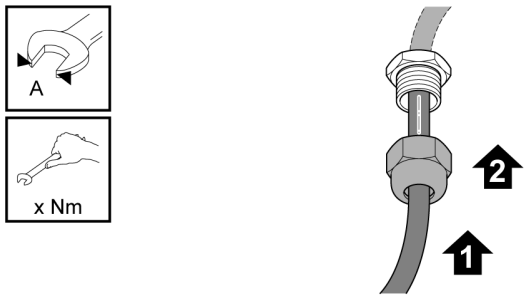

Figure 52: Fastening the cable bushing

6.6.2.3 Base plate with flange opening FL21

The base plate is equipped with three flange openings of size FL21. The flange openings are closed with blank covers in the delivery state. You can mount an FL21 size cable bushing or insert your own cable glands in the blank covers.

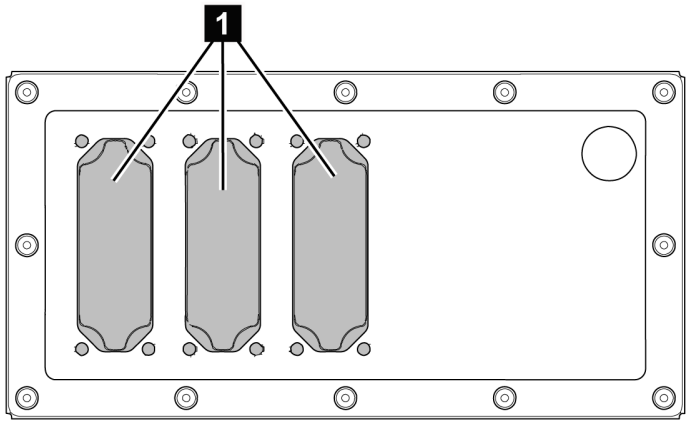

Figure 53: Base plate with FL21 flange openings

1	Flange opening with blank cover

To feed through the cable, proceed as follows:

1. Remove the blank cover.
2. Insert cable bushing size FL21 or cable gland in blank cover.
3. Feed the cable through the cable bushing in accordance with the manufacturer's specifications.
4. Mount the cable bushing or the blank cover and tighten with a tightening torque of 20 Nm.

6.6.3 Electromagnetic compatibility

The device has been developed in accordance with applicable EMC standards. The following points must be noted in order to maintain the EMC standards.

6.6.3.1 Wiring requirement of installation site

Note the following when selecting the installation site:

- The system's overvoltage protection must be effective.
- The system's ground connection must comply with all technical regulations.
- Separate system parts must be joined by a potential equalization.
- The device and its wiring must be at least 10 m away from circuit-breakers, load disconnectors and busbars.

6.6.3.2 Wiring requirement of operating site

Note the following when wiring the operating site:

- Route the connecting leads in grounded metal cable ducts.
- Do not route lines which cause interference (e.g. power lines) and lines susceptible to interference (e.g. signal lines) in the same cable duct.
- Maintain a distance of more than 100 mm between lines which cause interference and those which are susceptible to interference.

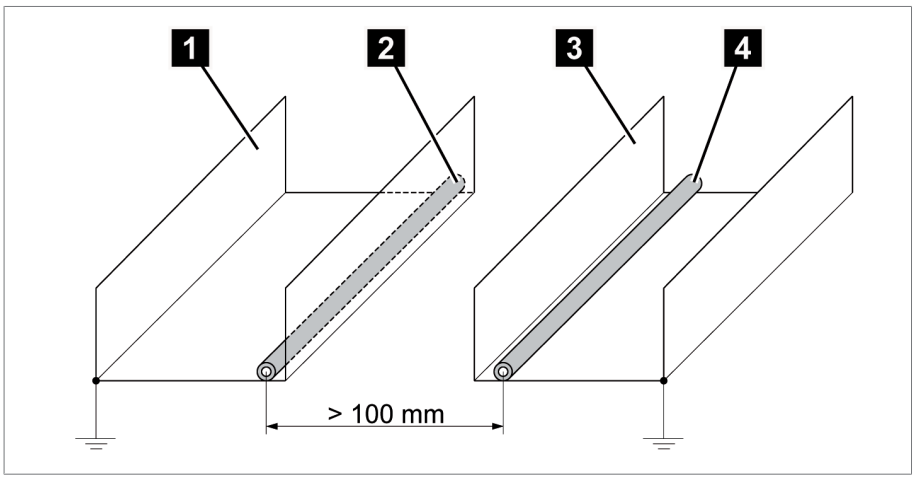

Figure 54: Recommended wiring

1	Cable duct for lines causing interference	3	Cable duct for lines susceptible to interference
2	Line causing interference (e.g. power line)	4	Line susceptible to interference (e.g. signal line)

- Short-circuit and ground reserve lines.
- Never connect the device with a multi-wire collective pipe.

- For signal transmission, use shielded lines with individual conductors (outgoing conductor / return conductor) twisted in pairs.
- Connect full surface of shielding (360º) to device or to a nearby grounding bar.

Using single conductors may limit the effectiveness of the shielding. Connect close-fitting shielding to cover all areas.

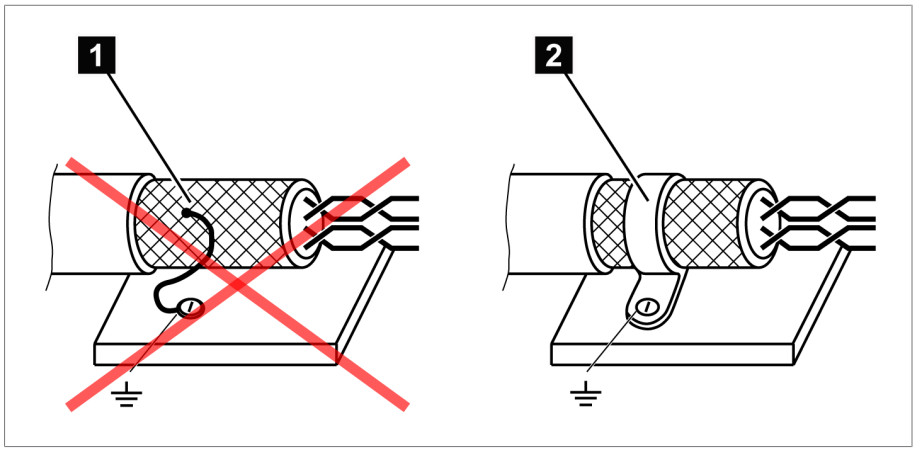

Figure 55: Recommended connection of the shielding

1	Connection of the shielding via a single conductor	2	Full-surface connection of the shielding

6.6.3.3 Wiring requirement in control cabinet

Note the following when wiring in the control cabinet:

- The control cabinet where the device will be installed must be prepared in accordance with EMC requirements:
  - Functional division of the control cabinet (physical separation)
  - Constant potential equalization (all metal parts are joined)
  - Line routing in accordance with EMC requirements (separation of lines which cause interference and those susceptible to interference)
  - Optimum shielding (metal housing)
  - Overvoltage protection (lightning protection)
  - Collective grounding (main grounding rail)
  - Cable bushings in accordance with EMC requirements
  - Any contactor coils present must be interconnected
- The device's connection cables must be laid in close contact with the grounded metal housing or in metallic cable ducts with a ground connection.
- Signal lines and supply lines / switching lines must be laid in separate cable ducts.

6.6.4 Information about connecting serial interfaces RS232 and RS485

NOTICE

Damage to the device!

Using the wrong data cable may damage the device.

► Only use data cables which comply with the description below.

RS232 (D-SUB 9-pole)

For connecting the device via the RS232 interface (COM2), use a data cable with the following structure:

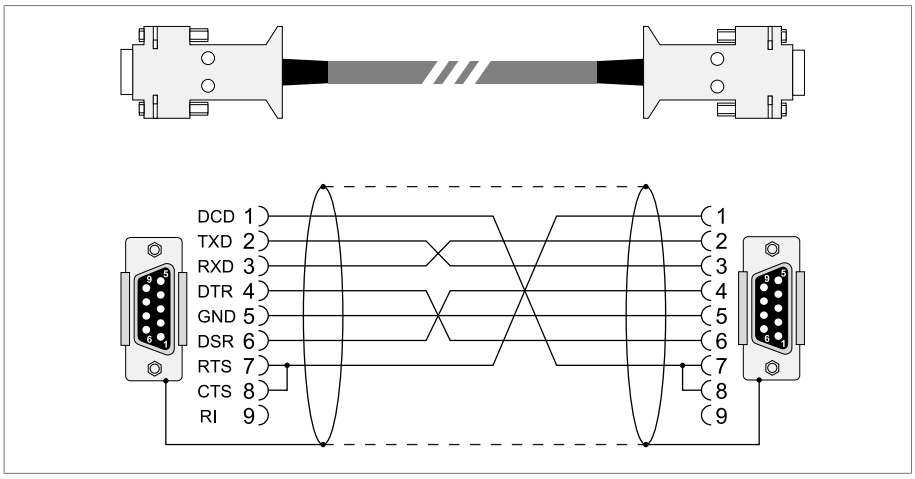

Figure 56: RS232 data cable (9-pole)

RS485 (D-SUB 9-pole)

To connect the device via the RS485 interface (COM2), use a data cable with the following structure:

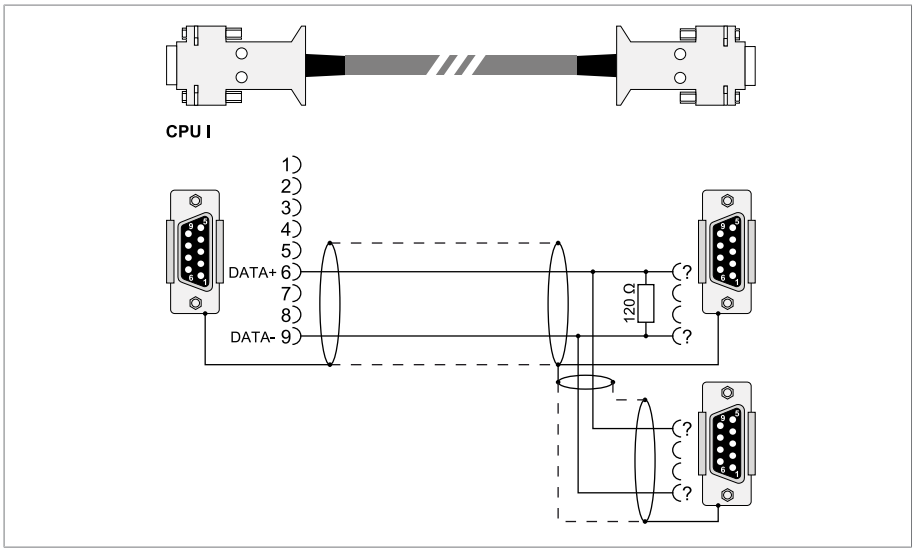

Figure 57: RS485 data cable

D-SUB 9-pole plug connection

Only use 9-pole D-SUB plugs with the following characteristics:

- Plug housing is metallic or metal-plated
- Cable shielding is connected with the plug using one of the two following variants:
  - Shielding is screwed down with traction relief.
  - Shielding is soldered with plug housing.

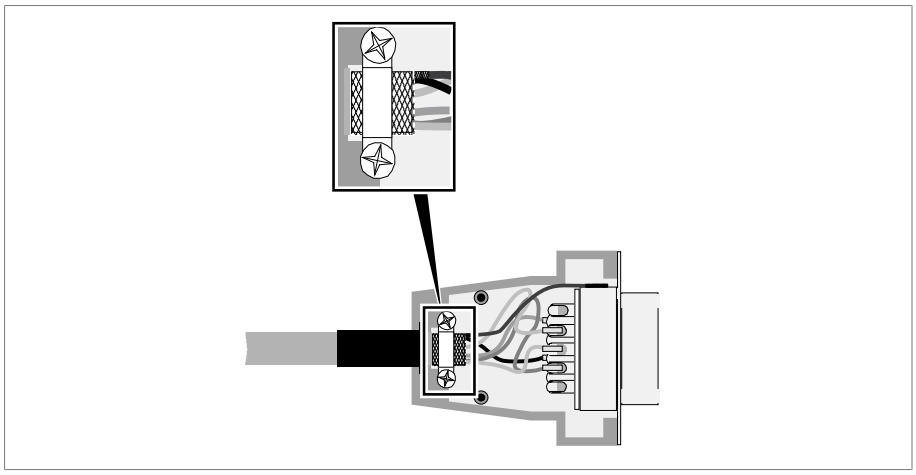

Figure 58: Example of a soldered shielding on a plug housing

6.6.5 Notes on connecting to the MR sensor bus

The optionally available MR sensor bus function lets you connect digital and analog sensors to the device over Modbus RTU. The MR sensor bus supports the connection of up to 31 sensors (Modbus slaves). The ISM® device operates as the Modbus master.

Ensure that no other Modbus master is connected over the MR sensor bus. Assign a unique Modbus address to each sensor you are connecting over MR sensor bus. The MR sensor bus may experience errors if multiple sensors are using the same Modbus address.

Observe the following notes for connecting the sensors:

- ***NOTICE!*** Damage to the device or sensor. Connect all of the sensors to the potential equalization rail to avoid circulating currents over the MR sensor bus.
- The MR sensor bus uses Modbus in a 2-wire configuration (2W). The 4-wire configuration (4W) is not supported.
- You must connect the sensors via a shielded line with 3 conductors (D0, D1, Common). The data lines (D0, D1) must be in twisted pairs. Note the cable recommendation.
- Stub lines from the bus node to the respective device must be shorter than 20 m.

- The CPU assembly contains a terminating resistor (120 Ω) at the COM2 interface. Install another terminating resistor (120 Ω, 0.5 W) at the other end of the bus.
- The CPU assembly contains a pull-up resistor and a pull-down resistor (each of 680 Ω in accordance with the Modbus specification). No additional pull-up/pull-down resistors are needed.

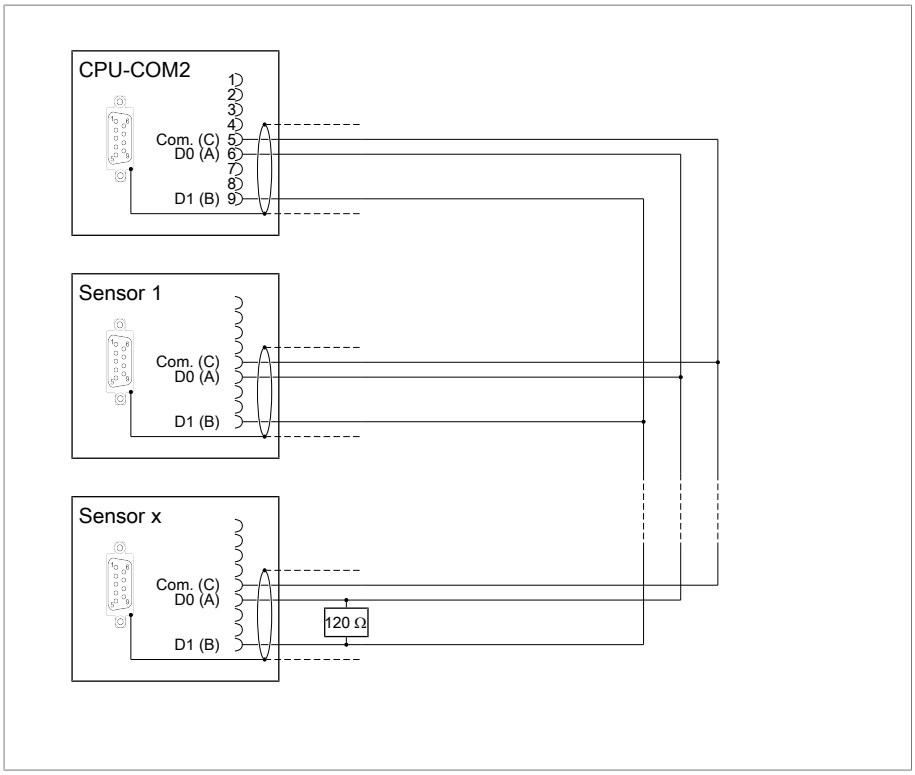

Figure 59: MR sensor bus

6.6.5.1 MSENSE® DGA

If you would like to use an MSENSE® DGA sensor, you must connect the sensor to the MR sensor bus in accordance with the following connection examples. If the MSENSE® DGA sensor is the only bus device or the last bus device, you must use a terminating resistor (120 Ω, 0.5 W).

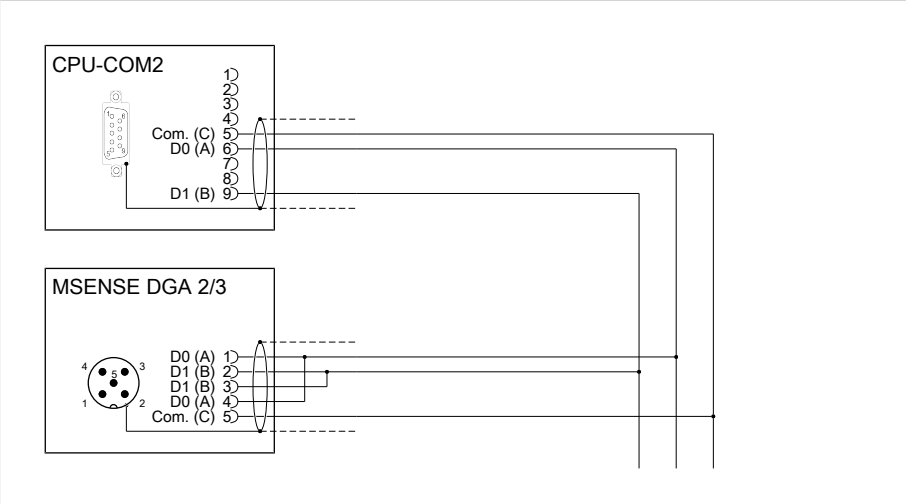

Figure 60: Connection example MSENSE® DGA 2/3 (connector M12, type A, 5-pole in accordance with IEC 61076-2-101)

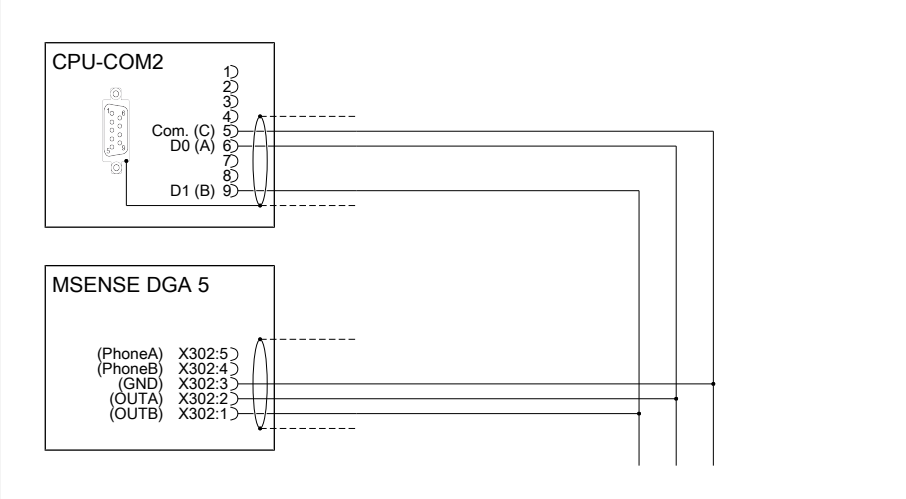

Figure 61: Connection example MSENSE® DGA 5 (terminal X302)

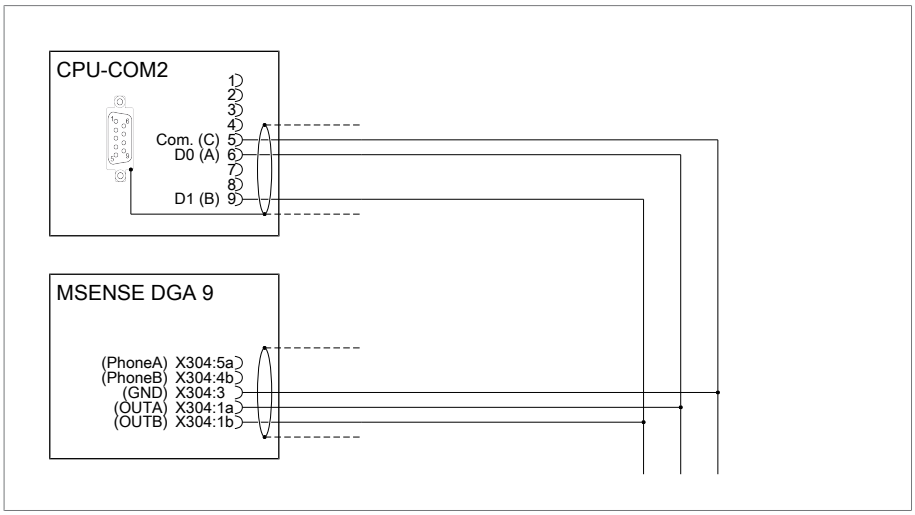

Figure 62: Connection example MSENSE® DGA 9 (terminal X304)

6.6.5.2 MESSKO® MTeC® EPT303 FO

If you would like to use a MESSKO® MTeC® EPT303 FO sensor, you must connect the sensor to the RS485 plug terminals on the sensor bus. Use a shielding clamp to apply the shield to the cable. You can directly connect additional MESSKO® MTeC® EPT303 FO sensors to the plug terminal.

The EPT303 FO sensor module contains a terminating resistor. If you would like to use the EPT303 FO sensor together with other sensor types on an MR sensor bus, then we recommend connecting the EPT303 FO sensor to the end of the bus.

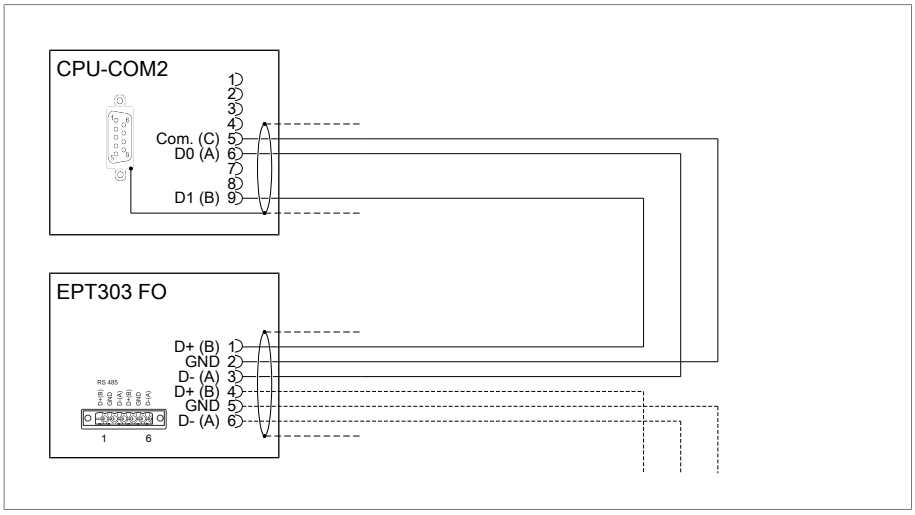

Figure 63: Connection example MESSKO® MTeC® EPT303 FO (terminal RS485)

6.6.5.3 MESSKO® MTRAB® 2.5

If you would like to use a MESSKO® MTRAB® 2.5 sensor, you must connect the sensor to the RS485 plug terminals on the sensor bus.

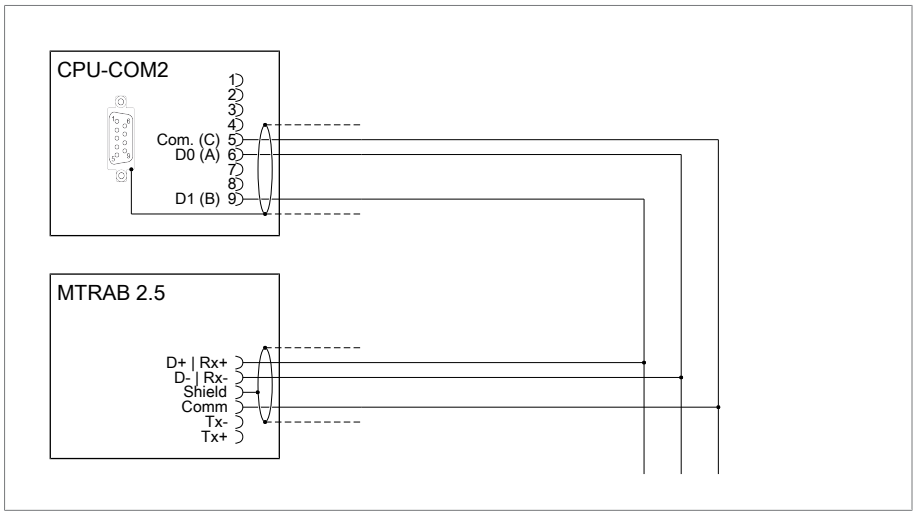

Figure 64: Connection example MESSKO® MTRAB® 2.5 (terminal RS485)

You must enable the half-duplex operating mode on the sensor by switching the "Duplex mode" switch to the "HALF" setting. If the MESSKO® MTRAB® 2.5 sensor is the only bus device or the last bus device, you must activate the sensor terminating resistor by switching the "BUS termination 120 ohms" switch to the position "1 = ON" and "2 = OFF".

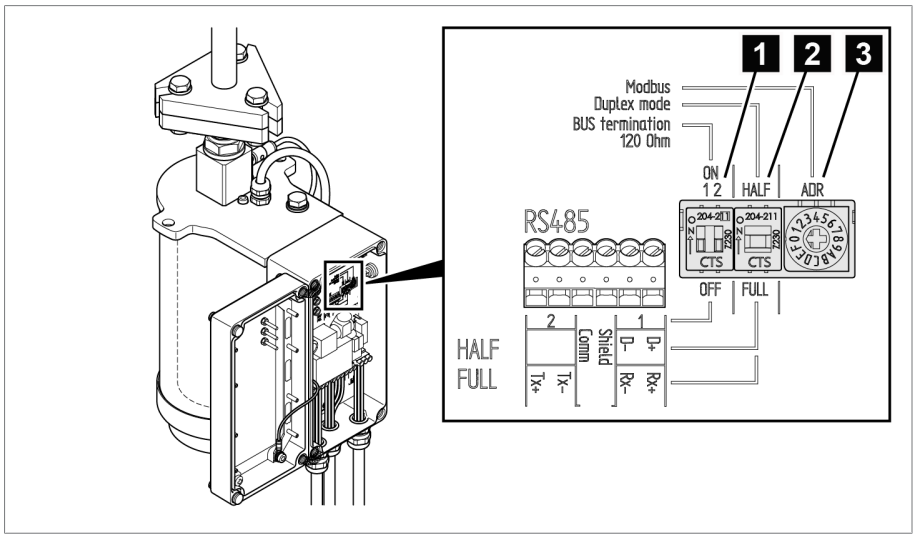

Figure 65: MESSKO® MTRAB® 2.5 Modbus configuration

1	Terminating resistor: in half duplex mode: 1 = ON, 2 = OFF; in full duplex mode: 1 = ON, 2 = ON	2	Operating mode: HALF = half duplex, FULL = full duplex
3	Modbus address		

6.6.5.4 MSENSE®-FO ECU-I/S

If you would like to use an MSENSE®-FO ECU-I or ECU-S sensor, you must connect the sensor to the RS485 plug terminals on the sensor bus. Use a shielding clamp to apply the shield to the cable. If the MSENSE®-FO sensor is the only bus device or the last bus device, you must use a terminating resistor (120 Ω, 0.5 W). You must activate the half-duplex, 2-conductor operating mode on the sensor via the MSET-FO configuration software.

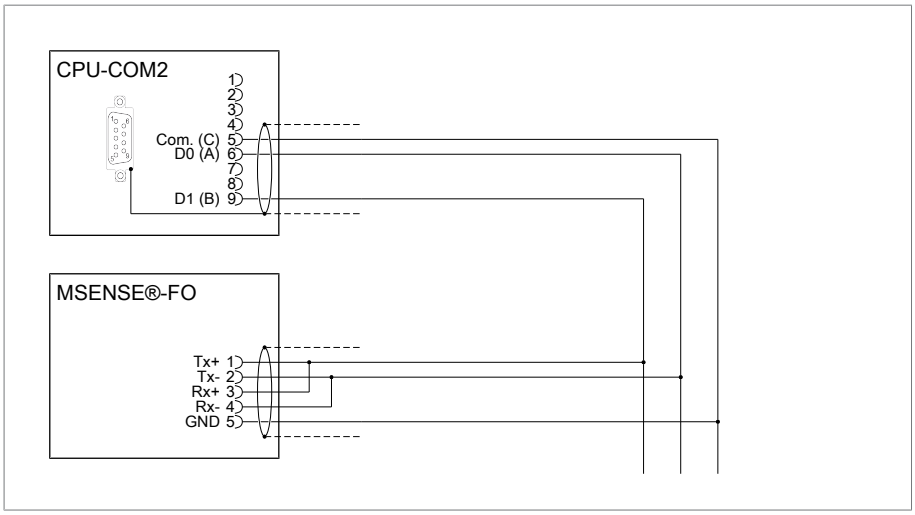

Figure 66: Connection example MSENSE®-FO ECU-I and ECU-S (terminal RS485)

6.6.6 Information on connecting to the CAN bus

6.6.6.1 Mounting terminating resistor of CAN bus

If you want to operate the device in parallel operation, you need to mount a 120 Ω terminating resistor at both ends of the CAN bus. Use the plug connector with terminating resistor provided as an option.

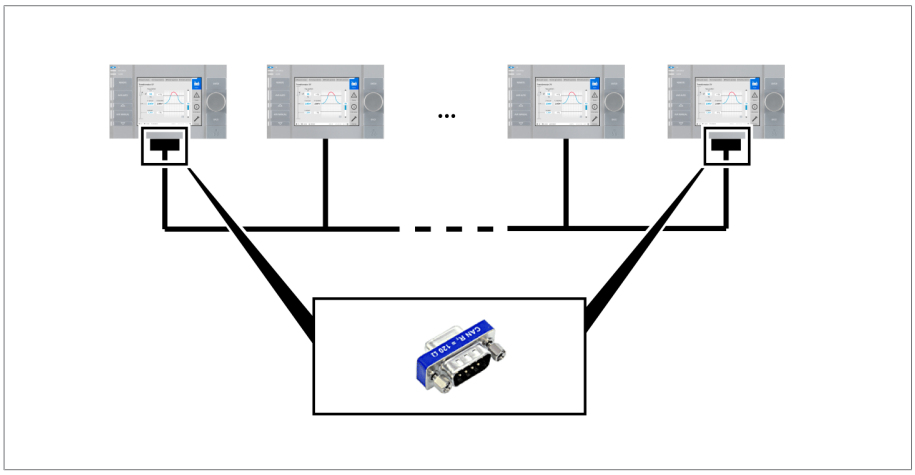

Figure 67: Terminating resistor of CAN bus

6.6.6.2 Information about shielding the CAN bus

In order for the CAN bus to operate faultlessly, you have to connect the shielding using one of the following variants. If you are not able to use any of the variants detailed below, we recommend using fiber-optic cables. Fiber-optic cables decouple the devices and are not sensitive to electromagnetic interference (surge and burst).

NOTICE

Damage to the device!

If you connect the CAN bus cable to devices with different potentials, current may flow across the shielding. This current may damage the device.

► Connect the devices to a potential equalization rail to equalize the potential.

► If both devices have different potentials, only connect the CAN bus cable shielding to one device.

Variant 1: The connected devices share the same potential

If the devices to be connected share the same potential, proceed as follows:

1. Connect all devices to a potential equalization rail to equalize the potential.
2. Connect the CAN bus cable shielding to all connected devices.

Variant 2: The connected devices have different potential levels

Note that the shielding is less effective with this variant.

If the devices to be connected have different potential levels, proceed as follows:

► Connect the CAN bus cable shielding **to just one** device.

Connecting shielding

Connect the shielding for the CAN bus cable to the 9-pin D-sub connector:

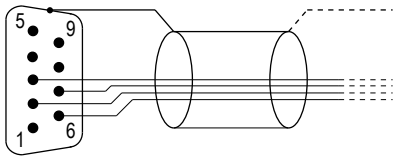

Figure 68: Connection of CAN bus cable shielding to the 9-pin D-sub connector

6.6.7 Information about connecting analog sensors

NOTICE

Damage to the device and sensors!

Incorrectly connected and configured analog inputs/outputs may result in damage to the device and sensor.

- ► Follow information about connecting analog sensors [►Section 6.6.7, Page 88].
- ► Configure analog inputs and outputs according to the connected sensors.

6.6.7.1 Information about shielding the cables for analog signals

In order to correctly record the analog signals, you must place the cable screening in the motor-drive unit on the grounding bar. The cable shielding should only be removed just prior to connecting, to ensure that the section with unshielded cables is kept as short as possible. The shielding must be connected with shielding clips.

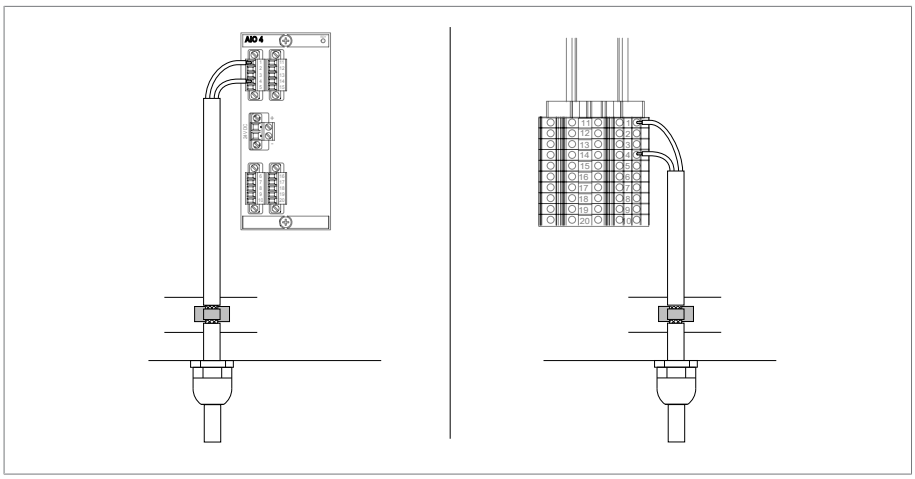

Figure 69: Examples of supporting shielding on grounding bar (on left: Direct connection to AIO assembly, on right: Connection using line-up terminal)

6.6.7.2 AIO connection example

The AIO assembly has a separate plug connector for each channel (input or output). The plugs are assigned as follows:

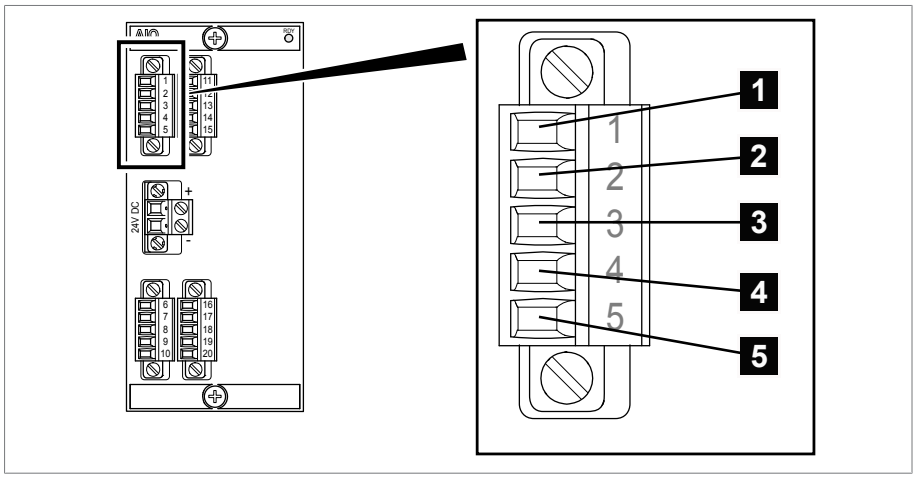

Figure 70: Plug assignment of the AIO module (illustration using module AIO 4 as an example)

Interface	Pin				Description
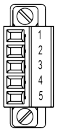	1	6	11	16	I OUT (+): Current output +
	2	7	12	17	I/U IN (+) U OUT (+): Voltage input +, current input +, voltage output +
	3	8	13	18	I/U IN (-): Voltage input -, current input -
	4	9	14	19	I/U OUT (-): Voltage output -, current output -
	5	10	15	20	Not used

Table 20: Analog inputs and outputs

You can connect the following types of analog sensors:

- 4...20 mA
- PT100/PT1000 (2-wire, 3-wire, 4-wire)

4...20 mA sensor

You must connect a 4...20 mA sensor to the pins **2** and **3**. You must also connect the included bridge to the pins **3**, **4** and **5**.

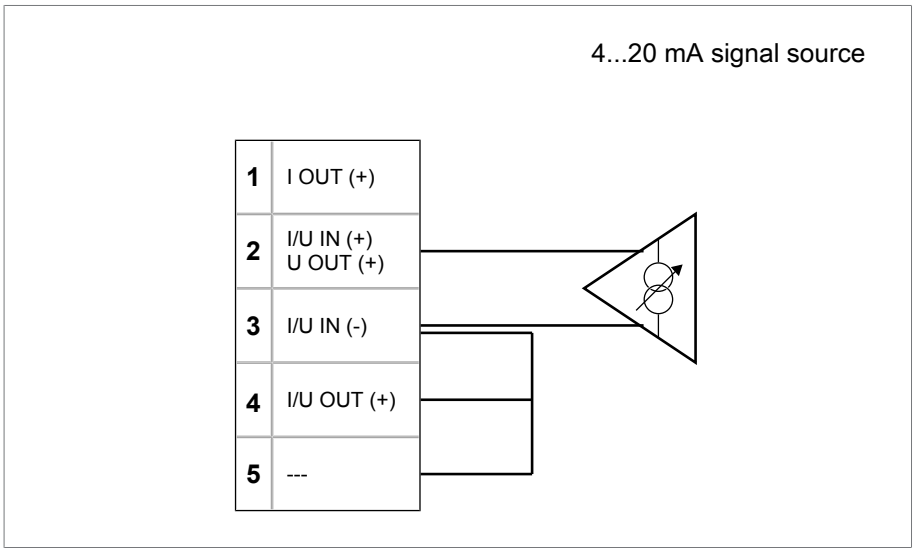

Figure 71: Connection example for a 4...20 mA sensor

PT100/PT1000 sensor

Depending on type, you must connect a PT100 sensor or PT1000 sensor as follows:

- 2-wire: pin **1** and **4**
- 3-wire: pin **1**, **3** and **4**
- 4-wire: pin **1**, **2**, **3** and **4**

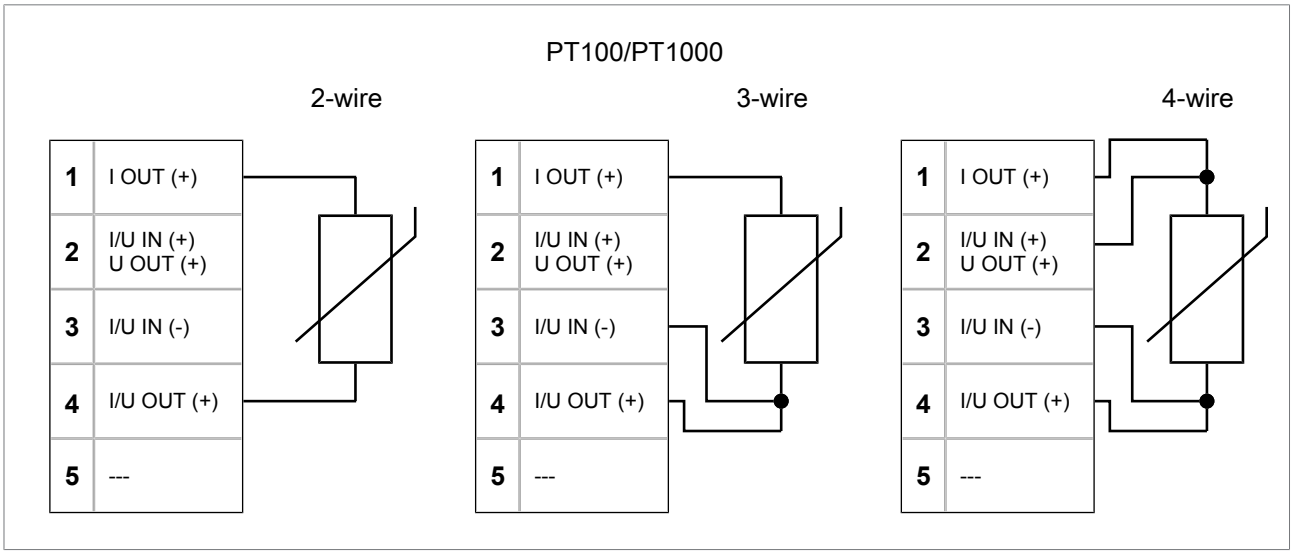

Figure 72: Connection example for a PT100/PT1000 sensor

6.6.8 Information on connecting the socket circuit

⚠ WARNING

Electric shock!

Connecting a socket that is not suitable for the grid type can lead to electric shock. This can lead to death or severe injuries.

- ► Connect the socket circuit in accordance with the connection diagram.
- ► Fuse the socket circuit in accordance with the specifications in the connection diagram.

6.6.9 Information on connecting the power supply

Observe the following information on connecting the control cabinet to the power supply.

6.6.9.1 Requirements on the power supply

ETOS TD You have to connect the motor-drive unit to an uninterruptible power supply to be able to switch the on-load tap-changer if the power supply fails.

6.6.9.2 Disconnecting switch and fuses

Observe the following requirements on the disconnecting switch and fuses for the control cabinet circuits.

Integrated fuse disconnect switch (optional)

If the control cabinet is fitted with an integrated fuse disconnect switch, you can connect the circuit directly to the power supply.

Circuits without integrated fuse disconnect switch

You may only connect the control cabinet to circuits with an external overcurrent protection device and an isolating device with all poles disconnected so the equipment can be fully de-energized if required (service, maintenance etc.).

Suitable equipment includes isolating devices in accordance with IEC 60947-3 (e.g. switch disconnectors). Observe the properties of the relevant circuits (voltage, maximum currents) when selecting the circuit breaker type. In addition, observe the following:

- It must be easy for the operator to access the isolating device
- The isolating device must be labeled for the device and the circuits to be isolated
- The isolating device may not be a part of the power line
- The isolating device may not interrupt the main protective conductor

Select the miniature circuit breaker based on the product's electrical power data (voltage and current; see nameplate) and the internal wiring's conductor cross-sections (see connection diagram):

- Max. 10 A at 0.75 mm²
- Max. 16 A at 1.5...2.5 mm²

6.6.9.3 Conductor cross-section

Unless specified otherwise, the connections for the supply circuits must have a conductor cross-section of at least 2.5 mm^2 (AWG 13). Check applicable standards and directives to ensure that the specified minimum cross-section of the supply line is sufficient.

6.7 Checking functional reliability

To ensure that the device is wired correctly, check its functional reliability.

NOTICE

Damage to device and system periphery!

An incorrectly connected device can cause damage to the device and system periphery.

► Check the entire configuration before commissioning.

With ambient temperatures below 0°C, we recommend switching the control cabinet heater on for at least 1 hour prior to commissioning.

► Apply voltage to the control cabinet.

⇨ The device control system boots up; after a brief period the relay switches the operating contact *STATUS OK*.

The device is fully mounted and can be configured. The actions required for this are described in the following chapter.

7 Commissioning

7.1 Performing tests

Please contact Maschinenfabrik Reinhausen GmbH (MR) if any aspect of the tests is not clear.

7.1.1 Function test of the motor-drive unit

⚠ WARNING

Danger of death or severe injury!

Danger of death or severe injury due to electrical voltage and incorrect assembly!

► Ensure that the motor-drive unit is connected in accordance with the connection diagrams provided.

► Ensure protection against contact; the cover plates must be closed.

To check that the motor-drive unit is functioning, proceed as follows:

1. Activate maintenance mode of the monitoring system (VIM) [► Section 4.5.3.2.4, Page 44].
2. Synchronize the motor-drive unit [► Section 9.19, Page 210].
3. Move the motor-drive unit into the lowest operating position.
4. Lower the tap position of the motor-drive unit once more.
   ⇨ The motor-drive unit tap position must not change since it is in the end position.
5. Move the motor-drive unit into the highest operating position.
6. Raise the tap position of the motor-drive unit once more.
   ⇨ The motor-drive unit tap position must not change since it is in the end position.
7. Deactivate the maintenance mode of the monitoring system.

⇨ The motor-drive unit function test is complete. Contact Maschinenfabrik Reinhausen if faults occurred during the function test.

7.1.2 High-voltage tests on the transformer

Note the following points before performing high-voltage tests on the transformer:

- Ensure that the oil compartment of the on-load tap-changer is completely filled with insulating fluid.
- Ensure that all protective devices for the on-load tap-changer are functioning correctly and are ready for use.
- Ensure that the ground connections on the motor-drive protective housing and protective housing fastening are free of paint.

- Only perform high voltage test if motor-drive unit door is closed.
- Disconnect external connections to electronic components in the motor-drive unit to prevent damage from overvoltage.
- When connecting the motor-drive unit's supply voltage, only use the cable bushings in the protective housing base intended for lead insertion.
- Guide all ground connecting leads to one central connection point (establishment of suitable reference earth).
- Disconnect all electronic components before the high voltage test. Before a dielectric test of the wiring, remove all devices with a withstand voltage of < 1000 V.
- Remove leads used for testing before the high voltage test as these function as antennas.
- Wherever possible, route the measurement leads and data leads separately to the energy cables.

Contact the manufacturer if you have any questions about possible sources of danger.

7.1.3 Dielectric tests on transformer wiring

Note the following points for dielectric tests on the transformer wiring:

The motor-drive unit is put through dielectric tests before delivery.

► Before the dielectric test for the transformer wiring, disconnect drive from the section to be tested to rule out increased component loading for those components fitted in the motor-drive unit.

7.2 Transporting transformer to the operating site

You can leave the motor-drive unit completely on the transformer if you would like to transport the transformer to the installation location. If you have to remove the gear motor for transporting the transformer, proceed as follows:

1. Remove the connecting cable plug.
2. Remove gear motor screw connection on the on-load tap-changer head cover (3x M12).
3. Use lifting gear to remove gear motor from the on-load tap-changer head cover.
4. Cover exposed shafts and seals to protect them from dirt and damage.
5. Set the gear motor on the installation location of the transformer from above onto the on-load tap-changer head cover using the lifting gear.
6. Tighten fixing screws (3x M12) using a tightening torque of 62 ± 6 Nm.
7. Connect gear motor.

7.3 Commissioning the transformer at the operating site

Before commissioning the transformer, repeat the function tests.

⚠ WARNING

Danger of death or severe injury!

Danger of death or severe injury due to incorrect operation.

► Only commission the transformer once the functions have been checked in accordance with section "Tests on the motor-drive unit".

NOTICE

Damage to motor-drive unit!

Damage to the motor-drive unit due to condensate in the control cabinet.

► Always keep the control cabinet of the motor-drive unit tightly closed.

► In the event of operation interruptions of more than 8 weeks prior to initial use, connect and operate the anti-condensation heater in the control cabinet. If this is not possible, place a sufficient amount of desiccant in the control cabinet.

8 Operation

8.1 Actuating motor-drive unit locally

To actuate the motor-drive unit locally, proceed as follows:

✓ Operating mode switch S32 or S132 is in the LOC position.

► Turn control switch S3 in the raise or lower direction.

⇨ The motor-drive unit performs the tap-change operation.

8.2 Selecting the operating mode

You can select the following operating modes:

- LOC (Local)
- REM (Remote)
- AUTO (only with option "Automatic voltage regulation")

To select the operating mode, proceed as follows:

► Turn control switch S32 or S132 to the desired position.

8.3 Monitoring motor-drive unit

⚠ WARNING

Danger of death or severe injury!

Danger of death or severe injury due to failure to observe the safety instructions!

► Make sure that only trained technicians perform work on the motor-drive unit.

► Note relevant safety instructions.

Monitoring of the motor-drive unit is limited to occasional visual inspections. For efficiency reasons these visual checks can be combined with the usual checks on the transformer.

Pay particular attention to the following:

- Control cabinet seals
- Correct functioning of installed electrical heater in control cabinet of motor-drive unit
- Seal integrity of the control cabinet's cable bushings

9 Visualization

The ETOS® TD motor-drive unit is equipped with web-based visualization . This allows you to configure the device with a computer and to display measured values.

System requirements

To access the web-based visualization, you need a PC with an HTML5-capable browser. The display is optimized for the following browsers:

- Microsoft® Internet Explorer 10 or higher
- Google Chrome™

9.1 Establishing connection to visualization

You can use the ETH1.1 interface or the optional ETH2.2 interface of the CPU assembly to establish the connection to the visualization. The interfaces do not use a DHCP server. Therefore, you must assign a static IP address to your PC. To do this, observe the following configuration example:

Interface		Configuration
Standard	ETH1.1	IP address: 192.168.165.1 (not adjustable)
	PC	IP address: 192.168.165.100 Subnet mask: 255.255.255.0
Optional	ETH2.2	IP address: 192.0.1.230 (factory setting) [▶ Section 9.3, Page 105] Subnet mask: 255.255.255.0
	PC	IP address: 192.0.1.100 Subnet mask: 255.255.255.0

Table 21: Interface configuration example

Establishing a connection via the ETH1.1 interface

To establish a connection via the ETH1.1 interface, proceed as follows:

1. Connect the PC and device using an Ethernet cable (RJ45 plug) via the ETH1.1 interface.

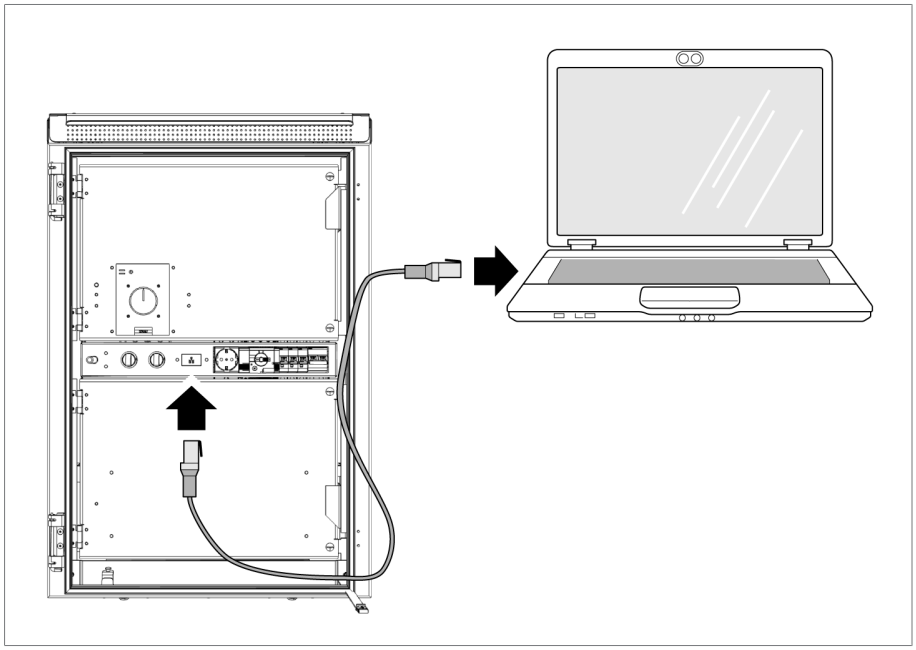

Figure 73: Establishing a connection via the front interface

2. Assign a unique IP address to the PC in the same subnet as the device (e.g. `192.168.165.100`).
3. Enter the visualization's IP address `http://192.168.165.1`, or if SSL encryption is active enter `https://192.168.165.1`, in the browser on the PC.

⇨ The visualization is accessed.

Establishing a connection via the ETH2.2 interface on the CPU module (optional)

The device is supplied with the IP address `192.0.1.230` at the factory. If you have changed the IP address, you can view the IP address in the Communication menu.

To connect via the ETH2.2 interface, proceed as follows:

1. Connect the PC and device using an Ethernet cable (RJ45 plug) via the ETH2.2 interface.

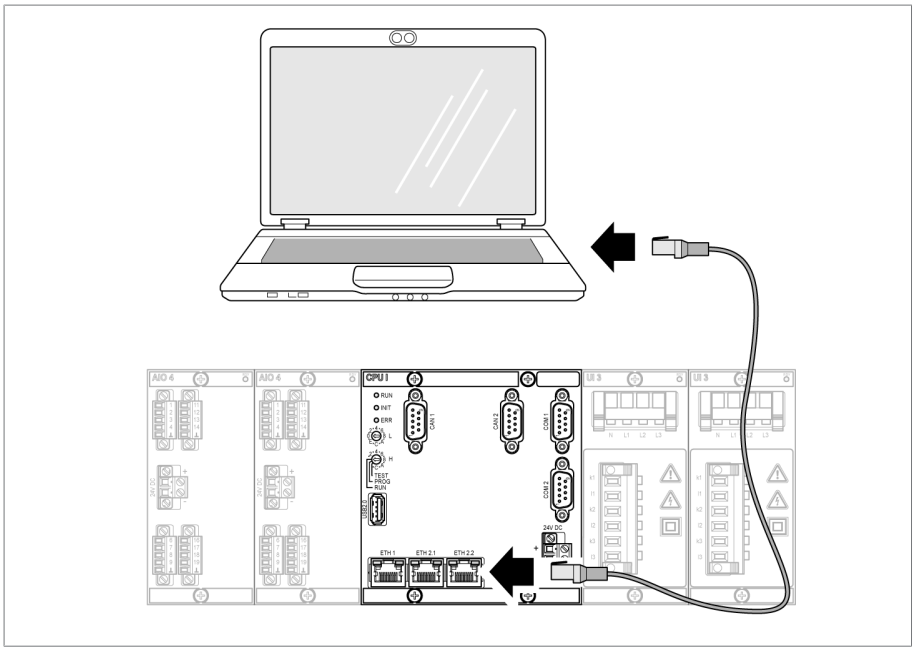

Figure 74: Establishing a connection via the ETH2.2 interface on the back

2. Assign a unique IP address to the PC in the same subnet as the device (e.g. `192.0.1.100`).
3. Enter the visualization's IP address (e.g. `http://192.0.1.230`, if SSL encryption is active enter `https://192.0.1.230`) in the browser on the PC.

⇨ The visualization is accessed.

9.2 General

You can set general parameters in this menu item.

9.2.1 Setting general device functions

You can set general device functions with the following parameters.

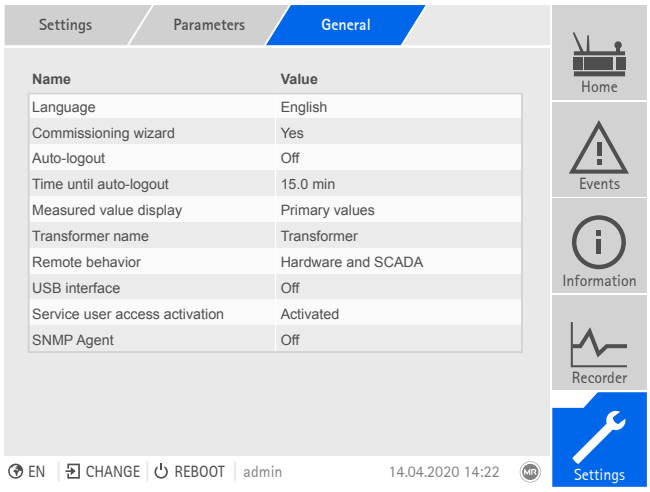

Figure 75: General

1. Go to **Settings > Parameters > System > General**.
2. Select the desired parameter.
3. Set the parameter.
4. Press the **Accept** button to save the modified parameter.

Commissioning wizard

You can use this parameter to set whether the commissioning wizard is to launch automatically when the device is restarted.

Measured value display

You can use this parameter to set whether the displayed measured values and control parameters are to refer to the primary side or secondary side of the measuring transducers.

Transformer name

You can use this parameter to enter a transformer name for identification purposes. The transformer name will be displayed on the main screen in the visualization.

Remote behavior

You can use this parameter to select the behavior of the device in remote operating mode. Depending on the device configuration, you can set the remote behavior as follows:

- Through the visualization (optional)
- By setting the digital inputs (optional)

You can select the following settings:

Setting	Description
Hardware only	The device accepts commands through digital inputs.
SCADA only	The device accepts commands via SCADA.
Hardware and SCADA	The device accepts commands via digital inputs and SCADA.

Table 22: Selecting remote behavior

USB interface

You can use this parameter to deactivate the USB interface. You can select the following options:

- On: USB interface is activated
- Off: USB interface is deactivated

9.2.2 Set up automatic logout

You can change the settings so that the device of a logged-in user automatically logs the user out after a certain period of inactivity.

These settings apply to all users. If you have activated the Auto login [▶Section 9.34.3, Page 315] function for a user, then this user will not be automatically logged out.

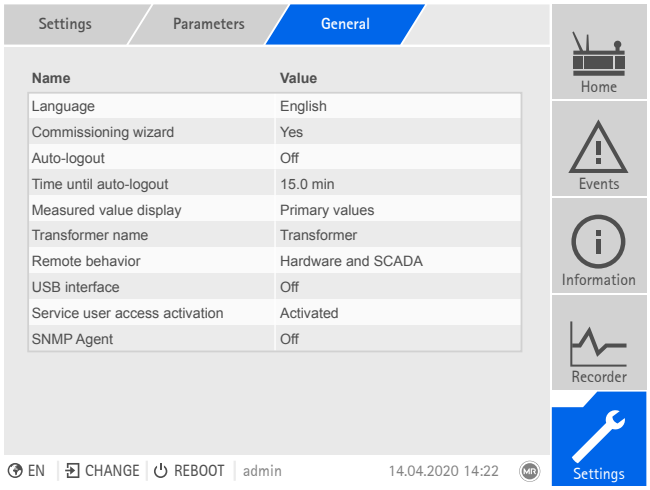

Figure 76: General

1. Go to **Settings > Parameters > System > General**.
2. Select the desired parameter.
3. Set the parameter.
4. Press the **Accept** button to save the modified parameter.

Auto logout

You can use this parameter to activate th automatic logout function.

Time until auto logout

You can use this parameter to set the time period of inactivity after which a user is automatically logged out.

9.2.3 Activating/deactivating service user access

The device is equipped with user access for the Maschinenfabrik Reinhausen GmbH Technical Service department. This access is for error diagnostics and troubleshooting in the event of device faults. Only activate service user access for a limited time period for remedying faults in order to safeguard IT security.

If you deactivate the service user access and lose your password for the administrator role, it is not possible to reset the administrator password. If the administrator password is lost, the device must be reset to the default settings. When doing so, all information stored on the device (parameters, measured values, etc.) will be lost.

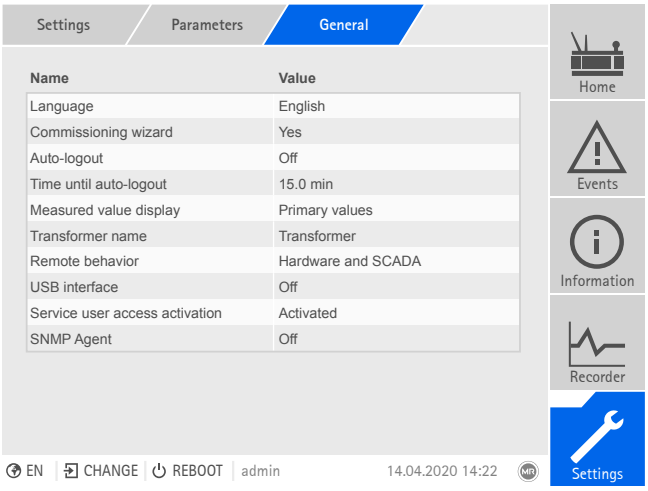

Figure 77: General

You must be assigned the administrator role to set parameters.

When in delivery status, you can log in as the administrator as follows:

- User name: `admin`
- Password: `admin`

1. Go to **Settings > Parameters > System > General**.
2. Select the desired parameter.
3. Set the parameter.
4. Press the **Accept** button to save the modified parameter.

5. Restart the device to apply the change.

Service user access activation

You can use this parameter to activate or deactivate service user access.

9.3 Configuring the network

You can configure the ETH 1 and ETH 2.2 network interfaces of the CPU assembly in this menu item.

You can only set the parameters for ETH 1 if the device is equipped with the optional control system connection via Ethernet (TCP/IP):

- IEC 61850
- IEC 60870-5-104
- Modbus (Modbus type TCP active)
- DNP3 (DNP3 transmission type TCP active)
- MQTT

You can only set the parameters for ETH 2.2 if the device is equipped with the optional interface for visualization.

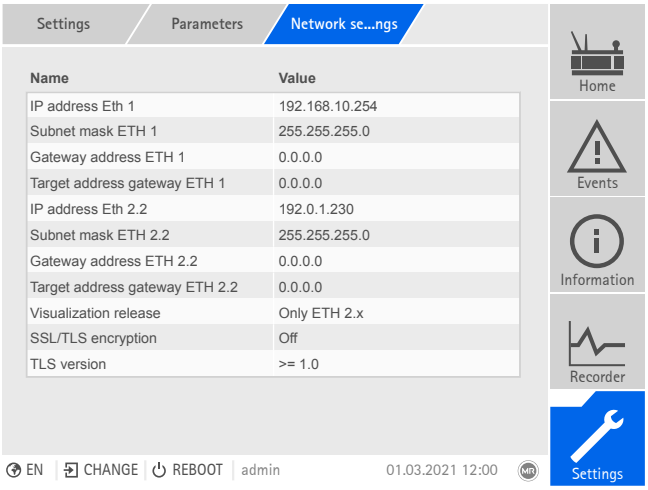

Figure 78: Network settings

1. Go to **Settings > Parameters > System > Network settings**.
2. Select the desired parameter.
3. Set the parameter.
4. Press the **Accept** button to save the modified parameter.

IP address ETH 1/ETH 2.2

You can use this parameter to assign an IP address to the device.

Assign IP addresses to both web-based visualization and SCADA (optional) in different subnets. Otherwise you will not be able to establish a connection.

Subnet mask ETH 1/ETH 2.2

You can use this parameter to set the subnet mask.

Be sure to enter a valid network mask that is not 0.0.0.0, otherwise it will not be possible to connect to the device.

Gateway address ETH 1/ETH 2.2

You can use this parameter to set the gateway's IP address.

If you set the value to 0.0.0.0, no gateway is used.

9.3.1 Gateway ETH 1/ETH 2.2 target address

You can use this parameter to set the gateway's IP address.

Visualization release

You can use this parameter to set the interfaces via which you can access the visualization:

- Only ETH 2.x
- ETH 1 and ETH 2.x

You can only set this parameter if the device is equipped with the optional control system connection via Ethernet (TCP/IP) and the optional interface for visualization.

SSL/TLS encryption

You can use this parameter to set whether the process for accessing the visualization should be carried out over an SSL/TLS-encrypted connection.

TLS version

You can use this parameter to set the accepted TLS versions. If you would like to establish an encrypted connection to the visualization, you must use an accepted TLS version. You can select the following options:

Option	Accepted TLS versions
>= 1.0	▪ 1.0 ▪ 1.1 ▪ 1.2
>= 1.1	▪ 1.1 ▪ 1.2
>= 1.2[1)]	▪ 1.2

Table 23: TLS version

[1)] This option can be selected only if the TLS version is supported by the connected peripheral equipment.

Activate DNS (optional)

You can use this parameter to activate DNS for name resolution. If you would like to use the MQTT protocol, you can establish the connection to the MQTT via a DNS server as an option. Also set the parameters necessary for the MQTT [▶ Section 9.4, Page 108] protocol.

DNS server (optional)

You can use this parameter to set the IP address of the DNS server.

9.4 MQTT

You can activate and configure the MQTT message protocol in this menu point. To do so, you must connect the device to an MQTT server (Broker) via Ethernet via the ETH 1 or ETH2.x interface on the CPU assembly. Note that the device will only send messages (publish). The receive message function is not active.

There are 2 options available for configuring the protocol:

- Via the IP address of the MQTT server:
  - Enter the IP address as the broker address.
  - It is not necessary to configure a DNS server.
- Via DNS server:
  - Configure the DNS server in "Network settings".
  - Enter the URL as the broker address.

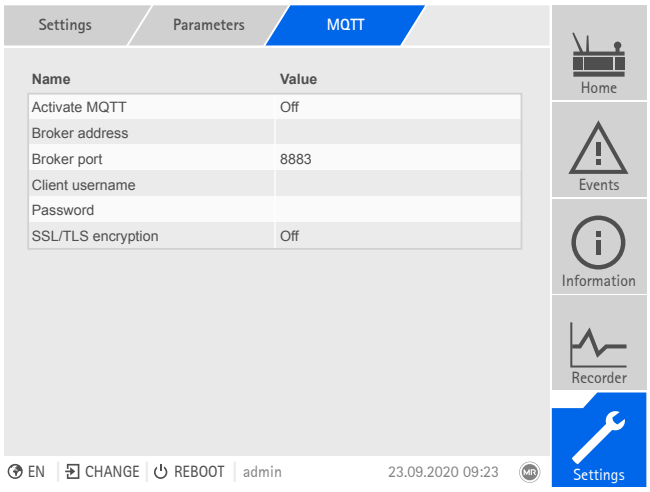

Figure 79: MQTT

✓ When using a URL on the broker, it may be necessary to enter and activate [▶Page 107] the IP address [▶Page 107] of the DNS server.

✓ If a DNS server is not available, enter the IP address [▶Page 105] of the MQTT server.

1. Go to **Settings > Parameters > System > MQTT**.
2. Select the desired parameter.
3. Set the parameter.
4. Press the **Accept** button to save the modified parameter.

Activate MQTT

You can use this parameter to activate the transmission of messages to the MQTT server (broker).

Broker address

If you use a URL address, you can use this parameter to enter the domain name of the MQTT server (broker). Otherwise, you can enter the IP address of the MQTT server.

Broker port

You can use this parameter to set the port of the MQTT server (broker). The following ports are used as standard:

- 8883 (SSL/TLS)
- 1883

Client username (optional)

You can use this parameter to set the client user name for authentication at the broker. When using authentication, you must configure the broker accordingly.

Password (optional)

You can use this parameter to set the password for authentication at the broker. When using authentication, you must configure the broker accordingly.

SSL/TLS encryption

You can use this parameter to set whether the data should be transmitted over an SSL/TLS-encrypted connection.

Note that an encrypted data transmission does not work if you are using an SSL proxy.

9.5 Setting the device time

You can set the the device time manually or automatically via an SNTP time server. The device must be connected to a time server via Ethernet for this purpose. You can operate SNTP and PTP at the same time. In this case, the PTP time is queried in slave operation.

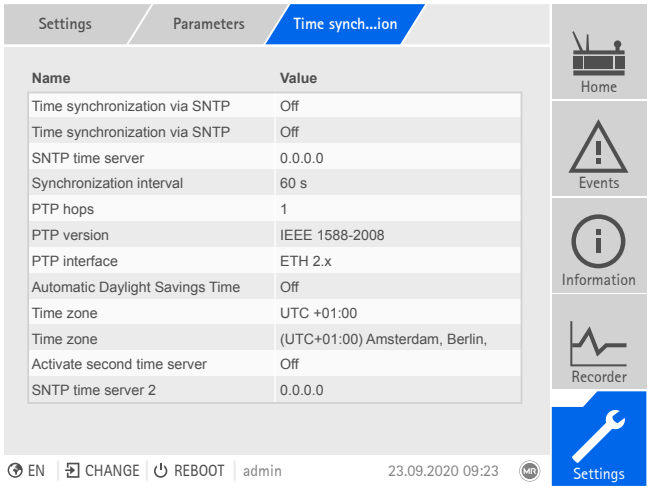

Figure 80: Time synchronization

1. Go to **Settings > Parameters > System > Time synchronization**.
2. Select the desired parameter.
3. Set the parameter.
4. Press the **Accept** button to save the modified parameter.

Time

You can use this parameter to set the date and time manually.

Time synchronization via SNTP

You can use this parameter to activate time synchronization using an SNTP time server.

SNTP time server

You can use this parameter to enter the IP address of a SNTP time server. If you are using a time server, the device uses the time of the time server as the system time.

Be sure to enter a valid time server address that is not 0.0.0.0, otherwise it will not be possible to connect to the device.

Synchronization interval

You can use this parameter to set the interval at which the device is to call up the time from the time server.

Automatic daylight saving / standard time

You can use this parameter to activate the automatic switchover between daylight saving time and standard time. Depending on the time zone (region) set, the device switches automatically between daylight saving time and standard time on the specified days.

Time zone

If the time information is transmitted to the device by a network service (SNTP or SCADA), this time is transferred depending on the set reference time. To adjust the device time to your local time, you can use the time shift parameter to set the time shift to UTC.

Example:

Region	Time shift to UTC
Mumbai, India	UTC +5:30 h
Beijing, China	UTC +8:00 h
Brasilia, Brazil	UTC -3:00 h

Table 24: Time shift to UTC (Coordinated Universal Time)

SNTP time server 2 (optional)

You can use this parameter to enter the IP address of the second time server (optional).

9.5.1 Time synchronization via PTP

You can use this parameter to activate time synchronization via a PTP time server.

PTP hops

You can use this parameter to enter the number of network sections between master and slave. You can set up to 16 hops.

PTP version

You can use this parameter to select the PTP version.

- PTP version 1 (IEEE 1588-2002)
- PTP version 2 (IEEE 1588-2008)

PTP interface

You can use this parameter to select the interface that the device is to use for PTP.

9.6 Configuring syslog

The device supports the transmission of log messages via the syslog protocol in accordance with the standards RFC 5424 and RFC 3164.

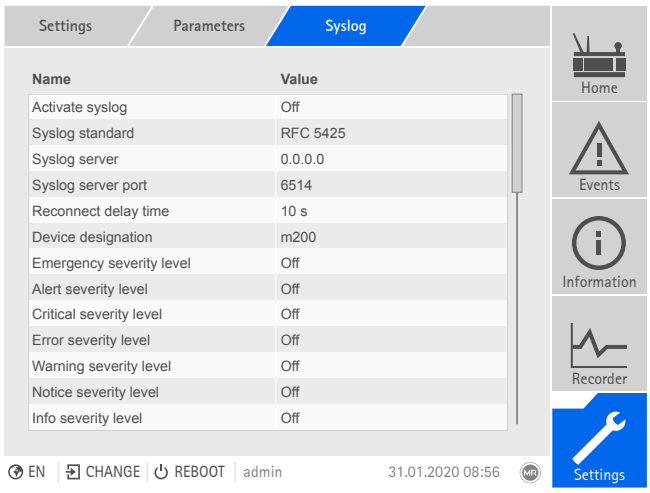

Figure 81: Syslog

1. Go to **Settings > Parameters > System > Syslog**.
2. Select the desired parameter.
3. Set the parameter.
4. Press the **Accept** button to save the modified parameter.

Activate syslog

You can use this parameter to activate transmission of syslog messages via the device.

Syslog standard

You can use this parameter to adjust the transmission process and the format for the syslog messages. You can select the following options:

Standard	Transport	Message format
RFC 5425 (recommended)	TLS	RFC 5424
RFC 5426	UDP	
RFC 6587	TCP	
RFC 3164	UDP	RFC 3164

Table 25: Syslog standard

If you use the standard RFC 5245 (TLS), you have to import the root certificate and the client certificate with the corresponding key to the syslog server. For more information, refer to the section titled Importing data [▶Section 9.36.2, Page 324].

Syslog server

You can use this parameter to set the IP address of the syslog server.

Syslog server port

You can use this parameter to set the port of the syslog server.

Reconnect delay time

You can use this parameter to determine how long the device will wait before it attempts to reconnect after the connection has been interrupted earlier or a syslog message could not be transmitted (only for TCP or TLS).

Device designation

You can use this parameter to set the device designation that the device will be identified with on the syslog server.

Severity level

You can set which syslog messages the device will send. You can also activate or deactivate messages for each severity level.

Severity level	Description
`Emergency`	The system is unusable.
`Alert`	Immediate intervention required.
`Critical`	Critical state
`Error`	Error state
`Warning`	Warning state
`Notice`	Notice state
`Info`	Information state
`Debug`	Debug state

Table 26: Severity levels

9.7 SCADA

The following section describes how you can configure the device to connect to a control system (SCADA). You can download the data points with the help of the export manager [▶Section 9.36, Page 323].

9.7.1 Configuring IEC 61850 (optional)

If you want to use the IEC 61850 control system protocol, you must set the following parameters. Also refer to the section Configuring the network [▶Section 9.3, Page 105].

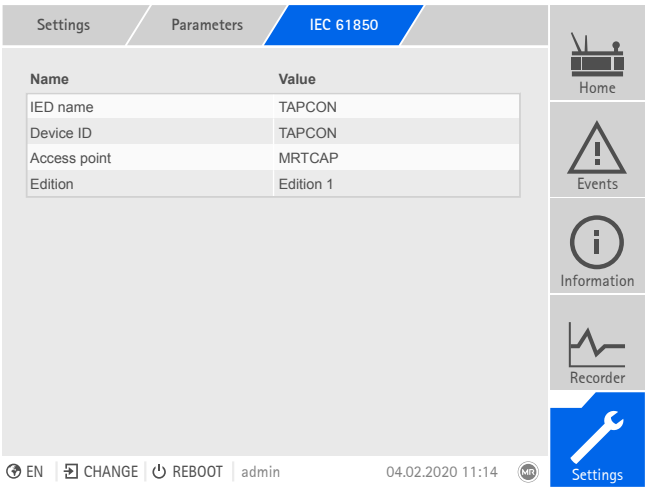

Figure 82: IEC 61850

1. Go to **Settings > Parameters > System > IEC 61850**.
2. Select the desired parameter.
3. Set the parameter.
4. Press the **Accept** button to save the modified parameter.

IED name

You can use this parameter to assign the device an IED name in order for it to be identified in the IEC 61850 network.

The IED name must start with a letter and may contain no more than 11 characters.

Device ID

You can use this parameter to assign a device ID to the device in order that it can be identified in the IEC 61850 network.

Access point

You can use this parameter to assign a name to the access point in the IEC 61850 network.

Edition

You can use this parameter to switch between edition 1 and edition 2 of the IEC 61850 control system protocol.

9.7.1.1 Downloading an ICD file

You can download the ICD file from the device via the Import/Export Manager [▶ Section 9.36, Page 323]. To do this, you have to establish an Ethernet connection between the device and your PC.

9.7.1.2 Importing CID/SCD file (optional)

Note the following definitions for importing a CID file or SCD file.

Only the following elements may differ between the imported IED and the exported IED from the TEMPLATE.icd.

- DataSet elements can be created in each LN
- ReportControl elements can be created in the LN containing the associated DataSet
- IP address (if this is not present, the preset one is used)
- Subnet mask (if this is not present, the preset one is used)
- Gateway IP address (if this is not present, the preset one is used)
- Name of IED (IED name)
- Name of AccessPoint (AccessPoint attribute name)
- Name of logical device (LDevice attribute inst)

OSI-PSEL, OSI-SSEL, and OSI-TSEL cannot be adjusted.

The SCD file may contain no more than 45 IEDs. It may take several minutes to import a complete SCD file. The SCD file should only contain the IEDs needed.

You can import the CID/SCD file via the Import/Export Manager. To do so, proceed as follows:

1. Go to **Settings > Import**.
2. Select and import the desired CID/SCD file.

9.7.2 Configuring IEC 60870-5-101 (optional)

If you want to use the IEC 60870-5-101 control system protocol, you must set the following parameters.

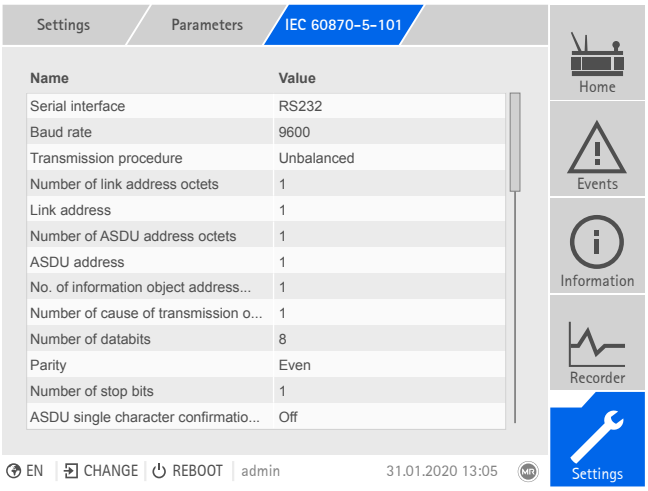

Figure 83: IEC 60870-5-101

1. Go to **Settings > Parameters > System > IEC 60870-5-101**.
2. Select the desired parameter.
3. Set the parameter.
4. Press the **Accept** button to save the modified parameter.

Serial interface

You can use this parameter to select the serial interface for data transmission. You can select the following options:

- RS232
- RS485

Baud rate

You can use this parameter to set the serial interface's baud rate. You can select the following options:

- 9600 baud
- 19200 baud
- 38400 baud
- 57600 baud
- 115200 baud

Transmission procedure

You can use this parameter to set the transmission procedure. You can select the following options:

- Unbalanced transmission
- Balanced transmission

Number of link address octets

You can use this parameter to set how many octets are provided for the link address.

Link address

You can use this parameter to set the link address.

Number of ASDU address octets

You can use this parameter to set how many octets are provided for the ASDU address.

ASDU address

You can use this parameter to set the address of the ASDU.

No. of information object address octets

You can use this parameter to set how many octets are provided for the information object address.

Number of cause of transmission octets

You can use this parameter to set how many octets are provided for the cause of transmission.

Number of data bits

You can use this parameter to set the number of databits.

Parity

You can use this parameter to set the parity. You can select the following options:

- None
- Even
- Odd

Number of stop bits

You can use this parameter to set the number of stop bits.

ASDU single character confirmation

You can use this parameter to set whether a confirmation is to be sent as single characters instead of as a complete message. Single character confirmation is only possible for requesting data of class 2 (Class 2 Request).

RES bit test

You can use this parameter to set whether the device is to check the RES bit (Reserved Bit) in the control field. You can select the following options:

Option	Description
On	Messages from the master with RES bit = 1 are declined by the device.
Off	Messages from the master with RES bit = 1 are accepted by the device.

Table 27: RES bit test

ASDU sequence optimization

With this parameter, you can set which method is to be used for optimizing the ASDU types. The standard enables optimization in order to be able to transfer multiple value changes in a telegram in a sequence of ascending information object addresses. This is displayed by the sequence bit. The selection of ASDU types for which this optimization is allowed is based on the edition of the standard.

You can select the following options:

Option	Description
None	The device does not optimize the ASDU types.
Ed. 1	Optimization in accordance with IEC 60870 Edition 1 (Type 1, 3, 9, 11, 21, 126).
Ed. 1 Amendment2	Optimization in accordance with IEC 60870 Edition 1, Amendment 2 (Type 1, 3, 9, 11, 13, 15 21, 126).
Ed. 2	Optimization in accordance with IEC 60870 Edition 2 (Type 1, 3, 5, 7, 9, 11, 13, 15, 20, 21, 126).

Table 28: ASDU sequence optimization

Reference time

You can use this parameter to set which time is to be transmitted by the control system. The device uses this information for time synchronization [▶Section 9.5, Page 110]. You can select the following options:

Option	Description
Local	The control system transmits the local time. Note: If you use this option, you must deactivate the automatic changeover between daylight saving time and standard time [▶Page 111]. Otherwise the device will use an incorrect time.
UTC	The control system transmits the time as UTC. The device calculates the local time from UTC and the set time zone [▶Page 111].

Table 29: Reference time

9.7.3 Configuring IEC 60870-5-103 (optional)

If you want to use the IEC 60870-5-103 control system protocol, you must set the following parameters.

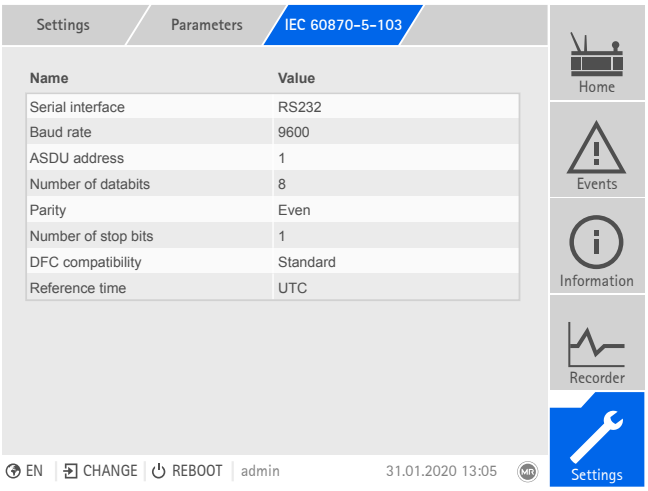

Figure 84: IEC 60870-5-103

1. Go to **Settings > Parameters > System > IEC 60870-5-103**.
2. Select the desired parameter.
3. Set the parameter.
4. Press the **Accept** button to save the modified parameter.

Serial interface

You can use this parameter to select the serial interface for data transmission. You can select the following options:

- RS232
- RS485

Baud rate

You can use this parameter to set the serial interface's baud rate. You can select the following options:

- 9600 baud
- 19200 baud
- 38400 baud
- 57600 baud
- 115200 baud

ASDU address

You can use this parameter to set the address of the ASDU.

Number of data bits

You can use this parameter to set the number of databits.

Parity

You can use this parameter to set the parity. You can select the following options:

- None
- Even
- Odd

Number of stop bits

You can use this parameter to set the number of stop bits.

DFC compatibility

You can use this parameter to set how the device is to use the DFC bit (Data Flow Control) in the control field. You can select the following options:

Option	Description
Standard	The device sets the DFC bit in each response to a command. The device thus indicates that the master may not send any further commands. The master must react to the ACD bit (Access Demand) and retrieve the response to the command e.g. via a request for data of class 1 from the slave queue.
Alternative	The device sets the DFC bit in a response if a second command is received without the master having previously sent a request for data of class 1.

Table 30: DFC compatibility

Reference time

You can use this parameter to set which time is to be transmitted by the control system. The device uses this information for time synchronization [▶Section 9.5, Page 110]. You can select the following options:

Option	Description
Local	The control system transmits the local time. Note: If you use this option, you must deactivate the automatic changeover between daylight saving time and standard time [▶Page 111]. Otherwise the device will use an incorrect time.
UTC	The control system transmits the time as UTC. The device calculates the local time from UTC and the set time zone [▶Page 111].

Table 31: Reference time

9.7.4 Configuring IEC 60870-5-104 (optional)

If you want to use the IEC 60870-5-104 control system protocol, you must set the following parameters. Also refer to the section Configuring the network [▶Section 9.3, Page 105].

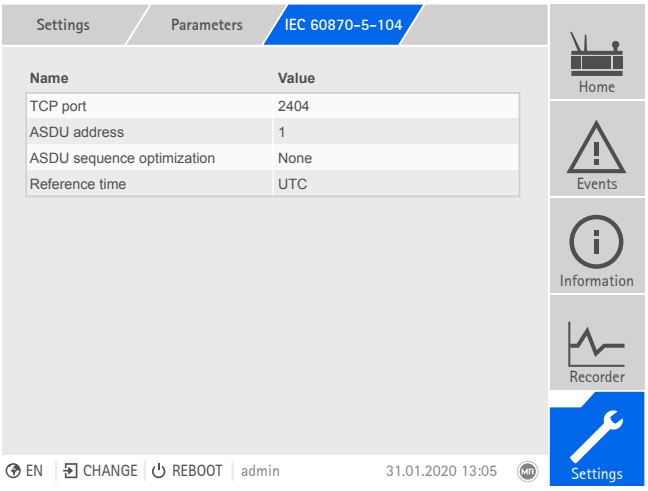

Figure 85: IEC 60870-5-104

1. Go to **Settings > Parameters > System > IEC 60870-5-104**.
2. Select the desired parameter.
3. Set the parameter.
4. Press the **Accept** button to save the modified parameter.

TCP port

You can use this parameter to set the TCP port.

ASDU address

You can use this parameter to set the address of the ASDU.

ASDU sequence optimization

With this parameter, you can set which method is to be used for optimizing the ASDU types. The standard enables optimization in order to be able to transfer multiple value changes in a telegram in a sequence of ascending information object addresses. This is displayed by the sequence bit. The selection of ASDU types for which this optimization is allowed is based on the edition of the standard.

You can select the following options:

Option	Description
None	The device does not optimize the ASDU types.
Ed. 1	Optimization in accordance with IEC 60870 Edition 1 (Type 1, 3, 9, 11, 21, 126).
Ed. 1 Amendment2	Optimization in accordance with IEC 60870 Edition 1, Amendment 2 (Type 1, 3, 9, 11, 13, 15 21, 126).
Ed. 2	Optimization in accordance with IEC 60870 Edition 2 (Type 1, 3, 5, 7, 9, 11, 13, 15, 20, 21, 126).

Table 32: ASDU sequence optimization

Reference time

You can use this parameter to set which time is to be transmitted by the control system. The device uses this information for time synchronization [▶ Section 9.5, Page 110]. You can select the following options:

Option	Description
Local	The control system transmits the local time. Note: If you use this option, you must deactivate the automatic changeover between daylight saving time and standard time [▶ Page 111]. Otherwise the device will use an incorrect time.
UTC	The control system transmits the time as UTC. The device calculates the local time from UTC and the set time zone [▶ Page 111].

Table 33: Reference time

IP address Client 1/2/3 (optional)

If you use the optional "Multi-client" function, you can use these parameters to set the IP addresses of the SCADA clients. The device only accepts commands through the control system from end devices that have their IP addresses set here.

Note that all SCADA clients communicate with the device on an equal basis, because the device does not prioritize commands. If you transmit commands from several SCADA clients to the device at the same time, the device will execute the last transmitted command.

9.7.5 Configuring Modbus (optional)

If you want to use the Modbus control system protocol, you must set the corresponding parameters depending on the Modbus type selected. Also refer to the section Configuring the network [▶Section 9.3, Page 105] if you want to use Modbus TCP.

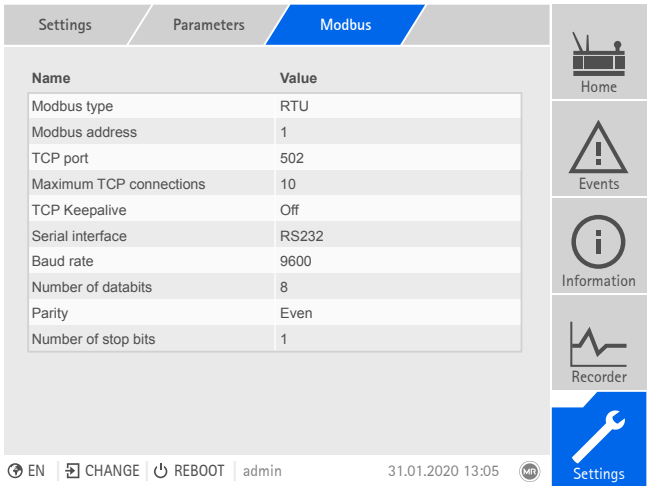

Figure 86: Modbus

1. Go to **Settings > Parameters > System > Modbus**.
2. Select the desired parameter.
3. Set the parameter.
4. Press the **Accept** button to save the modified parameter.

Modbus type

You can use this parameter to set the Modbus type. You can select the following options:

- RTU
- TCP
- ASCII

Modbus address

You can use this parameter to set the Modbus address.

TCP port

You can use this parameter to set the TCP port.

Maximum TCP connections

You can use this parameter to set the maximum number of TCP connections.

TCP Keepalive

You can use this parameter to activate/deactivate the "TCP Keepalive" function.

Serial interface

You can use this parameter to select the serial interface for data transmission. You can select the following options:

- RS232
- RS485

Baud rate

You can use this parameter to set the serial interface's baud rate. You can select the following options:

- 9600 baud
- 19200 baud
- 38400 baud
- 57600 baud
- 115200 baud

Number of data bits

You can use this parameter to set the number of databits.

Parity

You can use this parameter to set the parity. You can select the following options:

- None
- Even
- Odd

Number of stop bits

You can use this parameter to set the number of stop bits.

9.7.6 Configuring DNP3 (optional)

If you would like to use the DNP3 control system protocol, you must set the parameters listed below. Also refer to the section Configuring the network [▶Section 9.3, Page 105] if you want to use the DNP3 via TCP.

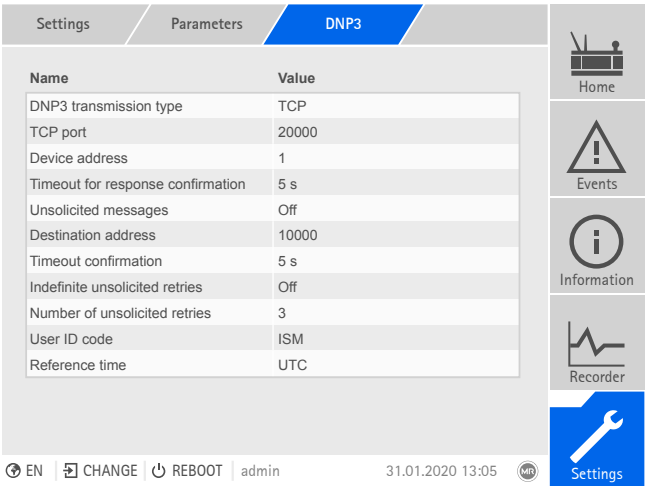

Figure 87: DNP3

1. Go to **Settings > Parameters > System > DNP3**.
2. Select the desired parameter.
3. Set the parameter.
4. Press the **Accept** button to save the modified parameter.

9.7.6.1 DNP3 transmission type

You can use this parameter to set the transmission type. You can select the following options:

- TCP
- Serial

TCP port

You can use this parameter to set the TCP port.

Serial interface

You can use this parameter to select the serial interface for data transmission. You can select the following options:

- RS232
- RS485

Baud rate

You can use this parameter to set the serial interface's baud rate. You can select the following options:

- 9600 baud
- 19200 baud
- 38400 baud
- 57600 baud
- 115200 baud

9.7.6.2 Device address

You can use this parameter to set the device link address.

9.7.6.3 Destination address

You can use this parameter to set the destination master link address.

9.7.6.4 Unsolicited messages

You can use this parameter to set whether the device is to support unsolicited messages. If you activate unsolicited messages, the device sends a message via the control system every time a value is changed.

9.7.6.5 Repetition of unsolicited messages

You can use this parameter to set how often the device is to send an unsolicited message until it receives a response from the DNP3 master.

9.7.6.6 Repeat unsolicited messages indefinitely

You can use this parameter to set the device to send an indefinite number of unsolicited messages until it receives a response from the DNP3 master.

9.7.6.7 Timeout

You can use this parameter to set the timeout for unsolicited messages.

9.7.6.8 Timeout for response confirmation

You can use this parameter to set the timeout for response confirmation for unsolicited messages.

9.7.6.9 User ID code

You can use this parameter to set the user ID code.

Reference time

You can use this parameter to set which time is to be transmitted by the control system. The device uses this information for time synchronization [▶Section 9.5, Page 110]. You can select the following options:

Option	Description
Local	The control system transmits the local time. Note: If you use this option, you must deactivate the automatic changeover between daylight saving time and standard time [▶Page 111]. Otherwise the device will use an incorrect time.
UTC	The control system transmits the time as UTC. The device calculates the local time from UTC and the set time zone [▶Page 111].

Table 34: Reference time

9.7.7 Configuring GOOSE (optional)

You can use the optional GOOSE function to send GOOSE messages (GOOSE publisher) or receive GOOSE messages (GOOSE subscriber) via the IEC 61850 control system protocol with the device.

The configuration of GOOSE is described in the following chapters.

9.7.7.1 Configuring GOOSE publisher

If you configure the device as a GOOSE publisher, you can send all data points which the device provides via MMS as GOOSE messages. To do this, you have to configure the data points using DataSets in an SCD/CID file.

SCD/CID file requirements

- The GOOSE control block (GSEControl) and the associated DataSet can only be created in LLN0.
- GSE elements for the configuration of the GOOSE message can be created under ConnectedAP.
- The maximum number of data points per GOOSE message is defined in Private Element type="MR-MAX-GOOSE-PUBLISH-FCDA". You cannot adjust this value.
- The maximum number of usable GSEControl elements is defined in TEMPLATE.icd under Services GOOSE. You cannot adjust this value.
- The shortest repeat time is defined in Private Element type="MR-MINTIME-GOOSE". You cannot adjust this value.

Example:

```
<DataSet name="DataSet_CbStates">
    <FCDA ldInst="ISM" lnClass="GGIO" lnInst="1" doName="Ind1" fc="ST"/>
    <FCDA ldInst="ISM" lnClass="GGIO" lnInst="1" doName="Ind2" fc="ST"/>
    <FCDA ldInst="ISM" lnClass="GGIO" lnInst="1" doName="Ind3" fc="ST"/>
    <FCDA ldInst="ISM" lnClass="GGIO" lnInst="1" doName="Ind4" fc="ST"/>
</DataSet>

<GSE ldInst="ISM" cbName="CbStates">
    <Address>
        <P type="MAC-Address">01-0C-CD-01-00-01</P>
        <P type="APPID" xsi:type="tP_APPID">0021</P>
        <P type="VLAN-PRIORITY">7</P>
        <P type="VLAN-ID">FAB</P>
    </Address>
    <MinTime unit="s" multiplier="m">100</MinTime>
    <MaxTime unit="s" multiplier="m">1000</MaxTime>
</GSE>

<GSEControl name="CbStates" datSet="DataSet_CbStates"
appID="Goo1" desc="ISM states" confRev="1"/>
```

Configuration

To configure the device as a GOOSE publisher, you have to call up the visualization via a PC. You must have a parameter configurator or administrator user role.

To configure the device as a GOOSE publisher, proceed as follows:

1. Go to **Settings > Export**.

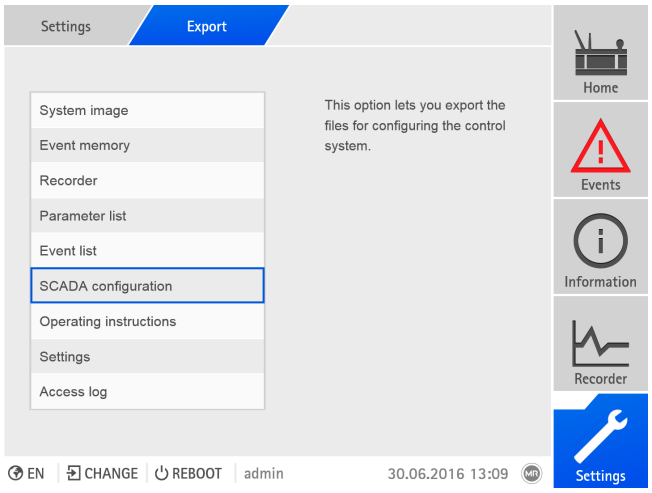

Figure 88: Exporting SCADA configuration

2. Select the **SCADA configuration** option.
   ⇨ The SCADA configuration is exported as a zip archive.
3. Unzip the zip archive and adapt the TEMPLATE.icd file to the requirements.
4. Go to **Settings > Import**.

5. Select the **PC** or **USB** option, select the SCD/CID file, and select **Transfer**.

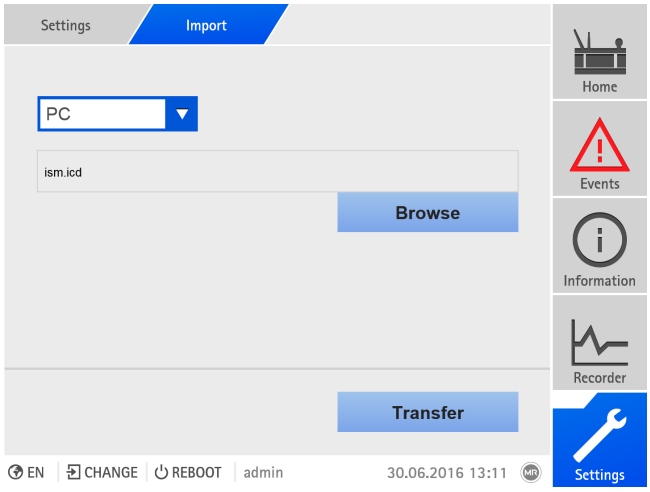

Figure 89: Importing an SCD/ICD file

6. Select the desired **IED** with the configuration that is to be imported and select **Accept** to start the import.

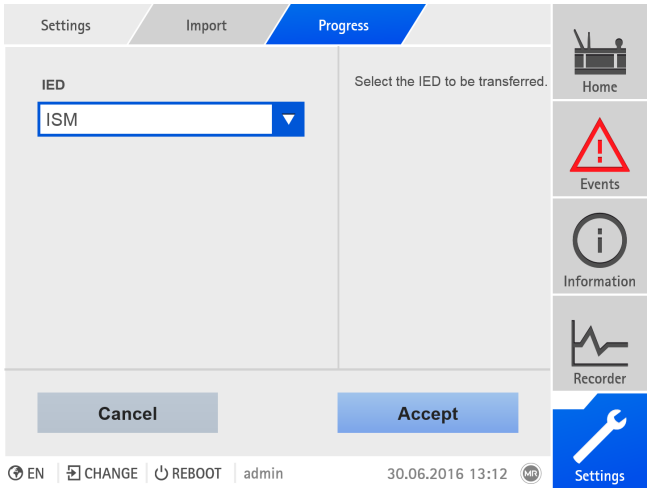

Figure 90: Selecting an IED

7. Upon successful completion of the import, restart the device.

⇨ The system restarts and checks the configuration. If the configuration failed, an error message appears and the device resets the configuration to the one with which it was delivered.

9.7.7.2 Configuring GOOSE subscriber

If you configure the device as a GOOSE subscriber, you can receive GOOSE messages from an IED in the network and link them to device functions. You can use this function to display all of the device's digital input signals via GOOSE.

GOOSE datagram requirements

The data point string may contain a maximum of 52 characters. The data point string is comprised of the following values: IED name, FCDA ldInst, prefix, lnClass, lnInst, fc, doName, daName.

In order to link GOOSE datagrams of an IED with device functions, the IED must contain a GOOSE control block (GSEControl) in the LN0 node and a valid DataSet and GSE block. The referenced DataSet may contain data objects (DO) or data attributes (DA). The maximum number of usable data points per GOOSE message is defined in Private Element type="MR-MAX-GOOSE-SUBSCRIBER-FCDA". You cannot adjust this value.

You can only use data points with bType BOOLEAN (true | false) and Dbpos (intermediate-state | off | on | bad-state). The functional constraint must be of type ST.

Value	Description
true | on	Is used as logical value 1
false | off	Is used as logical value 0
intermediate-state	Last value received is retained
bad-state	Error status, value is identified as invalid

Table 35: Description of values

The device automatically assesses the quality. If the device receives a quality not equal to 0, the value is also interpreted as invalid. The device then generates the *IEC 61850 GOOSE communication defective* event message.

Example:

```
<GSEControl name="LLN0_CB1" datSet="DataSet_CB1" appID="Goo1" confRev="1"/>

<GSE ldInst="ISM" cbName="LLN0_CB1">
    <Address>
        <P type="MAC-Address">01-0C-CD-01-00-01</P>
        <P type="APPID">21</P>
        <P type="VLAN-PRIORITY">7</P>
        <P type="VLAN-ID">FAB</P>
    </Address>
    <MinTime unit="s" multiplier="m">100</MinTime>
    <MaxTime unit="s" multiplier="m">1000</MaxTime>
</GSE>
```

Configuration

To configure the device as a GOOSE subscriber, you have to call up the visualization via a PC. You must have a parameter configurator or administrator user role.

To configure the device as a GOOSE subscriber, proceed as follows:

✓ The SCD file for your system with all required IEDs has been imported.

1. Go to **Settings > Mapping**.
   ⇨ The list of functions available on the device appears.

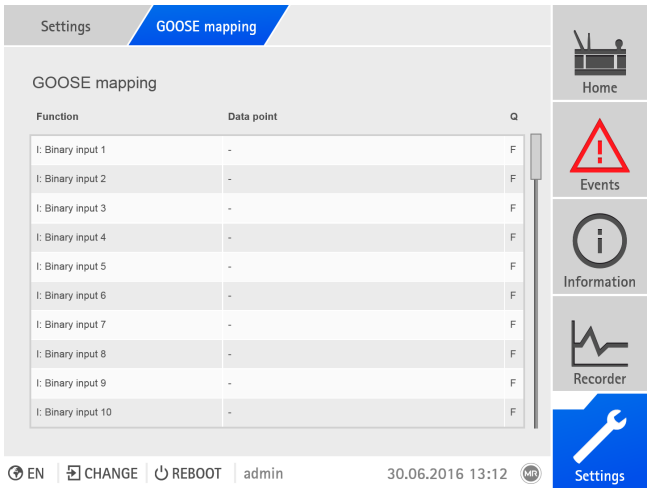

Figure 91: Overview of device functions available

2. Select the desired **function**.
3. Select the desired **IED**, **AccessPoint**, **LDevice**, and **GSEControl**.
4. Select the desired **data point**.

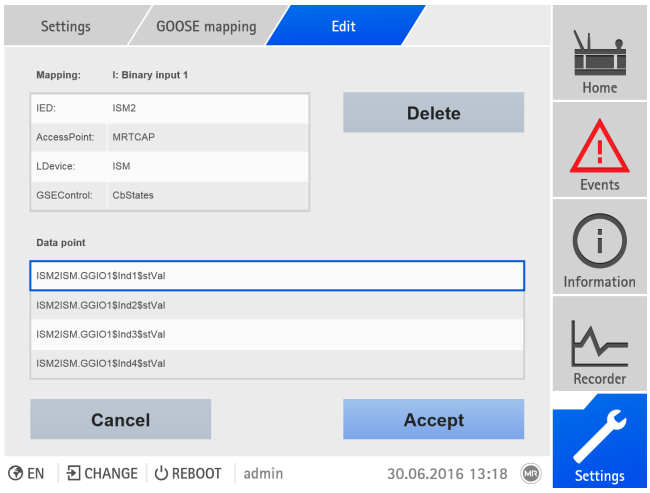

Figure 92: Selecting the data point

5. Press the **Accept** button to save the configuration.
   ⇨ The **Restart device** dialog appears.
6. Select **Cancel** if you want to configure other data points or **OK** to complete the modified configuration by restarting the device.

Deleting a configuration

If necessary, you can delete the data point configuration. To do so, proceed as follows:

1. Go to **Settings > Mapping**.
2. Select the desired **function**.
3. Press the **Delete** button to delete the configuration.

9.7.8 Configure data points (optional)

You can use the optional "Configure data points" function to adjust the control system data points of the device. You can only configure the data points on a PC using the web-based visualization.

9.7.8.1 Configuring IEC 60870-5-101 data points

You can adjust the following data point properties for the IEC 60870-5-101 control system protocol:

Column	Description	Modifiable	Setting range
Active	You can use the checkbox to set whether the data point is to be transferred via the control system protocol or not.	Yes	Active/inactive
IOA	Data point address. The setting range is based on the setting for the "Octet number of information object address" parameter (octet 2 or 3).	Yes	Octet 2: 1...65,535 Octet 3: 1...16,777,215
Name	Data point designation.	No	-
Type	Data point type.	No	-
Group	Data point group or groups. You must enter the group membership as a binary code (5 bits). A maximum of 5 groups is possible. Example: ▪ 00000: belongs to no groups ▪ 00001: group 1 ▪ 01000: group 4 ▪ 01001: group 1 and group 4	Yes	00000...11111
INTG	The value indicates whether the data point is to be included in a general query (1) or not (0).	Yes	0, 1

Column	Description	Modifiable	Setting range
TH	Threshold value for measured values. The data point is only transferred again if the change of value is greater than the threshold value. ▪ If you enter the value 0, no threshold value is active. ▪ If you do not enter any value, the device adopts the threshold value defined by the device parameter. If no device parameter is available for the threshold value, no threshold value is active either. ▪ Notice: You can only enter a threshold value for data points of type 9, 10, 11, 12, 13, 14, 21, 34, 35 or 36.	Yes	0...32,768
CT	Interval in ms for periodic transmission of the data point. If you set 0, the data point is not transmitted periodically. Notice: You can only enter an interval for data points of type 9, 11 or 13.	Yes	0...10,000

Table 36: Configuring IEC 60870-5-101 data points

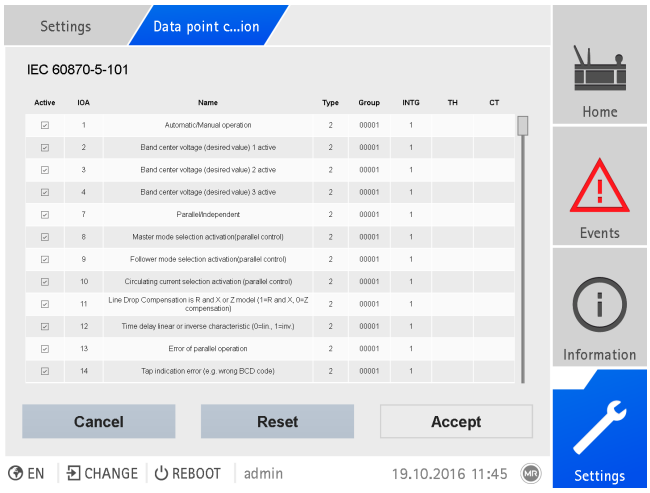

Figure 93: Configuring IEC 60870-5-101 data points

Proceed as follows to configure the data points:

1. Go to **Settings > Data point configuration**.
2. Adjust the data points as required.
3. Press the **Accept** button to adopt the modified list of data points.
4. Restart the device to activate the modified list of data points.

9.7.8.2 Configuring IEC 60870-5-103 data points

You can adjust the following data point properties for the IEC 60870-5-103 control system protocol:

Column	Description	Modifiable	Setting range
Active	You can use the checkbox to set whether the data point is to be transferred via the control system protocol or not.	Yes	Active/inactive
TYP	Data point type code.	No	-
FUN	Data point function type. Notice: You can only use function type 254 for data points with type code 10 or 11.	Yes	0...255
INF	Data point information number. Notice: You can only use information number 0 for data points with function type 254.	Yes	0...255
GIN	Data point generic identification number. Notice: You can only use generic identification number 0 for data points with a function type other than 254.	Yes	0...65,535
Data Type	Data point data type.	No	-
Name	Data point designation.	No	-
Interrogation	The value indicates whether the data point is to be included in a general query (1) or not (0).	Yes	0, 1
Threshold	Threshold value for measured values. The data point is only transferred again if the change of value is greater than the threshold value. ▪ If you enter the value 0, no threshold value is active. ▪ If you do not enter any value, the device adopts the threshold value defined by the device parameter. If no device parameter is available for the threshold value, no threshold value is active either.	Yes	0...1,000,000,000

Table 37: Configuring IEC 60870-5-103 data points

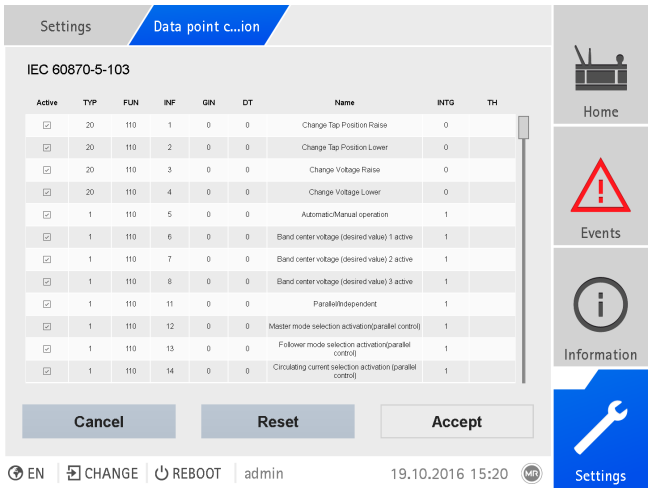

Figure 94: Configuring IEC 60870-5-103 data points

Proceed as follows to configure the data points:

1. Go to **Settings > Data point configuration**.
2. Adjust the data points as required.
3. Press the **Accept** button to adopt the modified list of data points.
4. Restart the device to activate the modified list of data points.

9.7.8.3 Configuring IEC 60870-5-104 data points

You can adjust the following data point properties for the IEC 60870-5-104 control system protocol:

Column	Description	Modifiable	Setting range
Active	You can use the checkbox to set whether the data point is to be transferred via the control system protocol or not.	Yes	Active/inactive
IOA	Data point address.	Yes	1...16,777,215
Name	Data point designation.	No	-
Type	Data point type.	No	-
Group	Data point group or groups. You must enter the group membership as a binary code (5 bits). A maximum of 5 groups is possible. Example: ▪ 00000: belongs to no groups ▪ 00001: group 1 ▪ 01000: group 4 ▪ 01001: group 1 and group 4	Yes	00000...11111
INTG	The value indicates whether the data point is to be included in a general query (1) or not (0).	Yes	0, 1
TH	Threshold value for measured values. The data point is only transferred again if the change of value is greater than the threshold value. ▪ If you enter the value 0, no threshold value is active. ▪ If you do not enter any value, the device adopts the threshold value defined by the device parameter. If no device parameter is available for the threshold value, no threshold value is active either. Notice: You can only enter a threshold value for data points of type 9, 10, 11, 12, 13, 14, 21, 34, 35 or 36.	Yes	0...32,768
CT	Interval in ms for periodic transmission of the data point. If you set 0, the data point is not transmitted periodically. Notice: You can only enter an interval for data points of type 9, 11 or 13.	Yes	0...10,000

Table 38: Configuring IEC 60870-5-104 data points

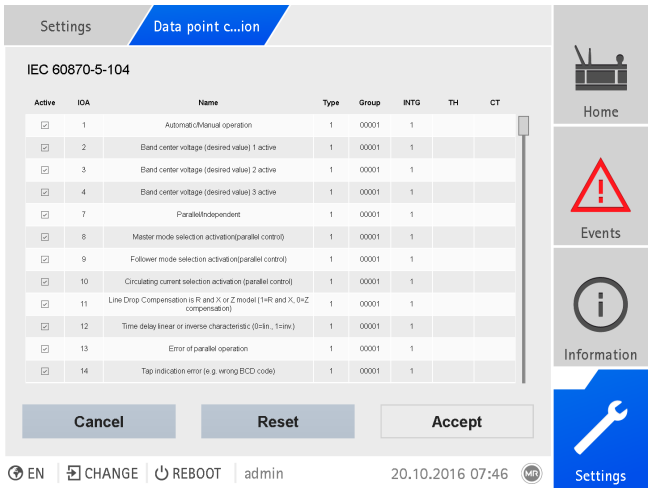

Figure 95: Configuring IEC 60870-5-104 data points

Proceed as follows to configure the data points:

1. Go to **Settings > Data point configuration**.
2. Adjust the data points as required.
3. Press the **Accept** button to adopt the modified list of data points.
4. Restart the device to activate the modified list of data points.

9.7.8.4 Configuring Modbus data points

You can adjust the following data point properties for the Modbus control system protocol:

Column	Description	Modifiable	Setting range
Active	You can use the checkbox to set whether the data point is to be transferred via the control system protocol or not.	Yes	Active/inactive
Type	Data point type	No	-
Index1	Data point address	Yes	0...65,535
Index2	Optional second data point address. This is used automatically for data points able to transfer values greater than 16 bits. Please note that the Index2 address always follows on from the Index1 address exactly.	No	-
Name	Data point designation	No	-

Table 39: Configuring Modbus data points

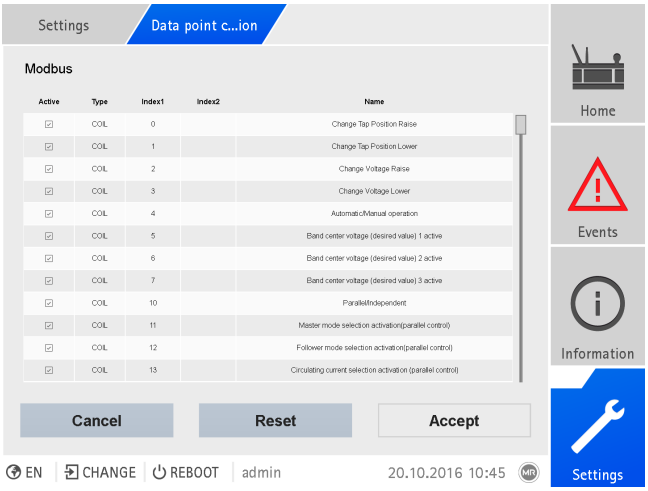

Figure 96: Configuring Modbus data points

Proceed as follows to configure the data points:

1. Go to **Settings > Data point configuration**.
2. Adjust the data points as required.
3. Press the **Accept** button to adopt the modified list of data points.
4. Restart the device to activate the modified list of data points.

9.7.8.5 Configuring DNP3 data points

You can adjust the following data point properties for the DNP3 control system protocol:

Column	Description	Modifiable	Setting range
Active	You can use the checkbox to set whether the data point is to be transferred via the control system protocol or not.	Yes	Active/inactive
OBJGROUP	The OBJGROUP column indicates the data point object group: ▪ AI = Analog Input ▪ AO = Analog Output ▪ BI = Binary Input ▪ BO = Binary Output ▪ CT = Counter	No	-
INDEXADDR	Data point address.	Yes	0...4,294,967,296
CLASS	Data point class. ▪ 0: Static ▪ 1...3: Event Notice: You can only set the data point class for data points of object groups AI, BI, and CT.	Yes	0...3

Column	Description	Modifiable	Setting range
PREFSTATICVAR	For a data point of class 0 (Static), you can define the following variation depending on the object group: ▪ BI: 1, 2 ▪ BO: 2 ▪ AI: 2, 4 ▪ AO: 2 ▪ CT: 1, 2, 5, 6	Yes	0...6
PREFEVENTVAR	For a data point of classes 1...3 (Event), you can define the following variation depending on the object group: ▪ BI: 1, 2, 3 ▪ BO: no value ▪ AI: 2, 4 ▪ AO: no value ▪ CT: 1, 2, 5, 6	Yes	0...6
NAME	Data point designation.	No	-
Deadband	Threshold value for analog inputs. The data point is only transferred again if the change of value is greater than the threshold value. ▪ If you enter the value 0, no threshold value is active. ▪ If you do not enter any value, the device adopts the threshold value defined by the device parameter. If no device parameter is available for the threshold value, no threshold value is active either. Notice: The threshold value has the same unit as the data point value. Take note of the list of data points.	Yes	0...32,768

Table 40: Configuring DNP3 data points

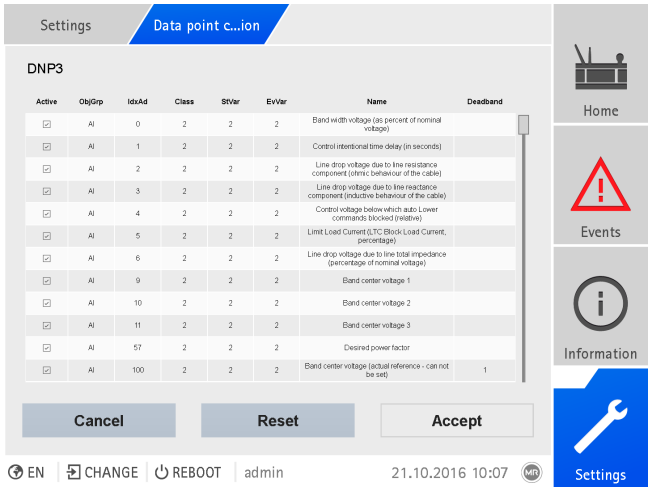

Figure 97: Configuring DNP3 data points

Proceed as follows to configure the data points:

1. Go to **Settings > Data point configuration**.
2. Adjust the data points as required.
3. Press the **Accept** button to adopt the modified list of data points.
4. Restart the device to activate the modified list of data points.

9.7.8.6 Resetting the data point configuration to factory settings

If you want to reset the data point configuration to factory settings, proceed as follows:

1. Go to **Settings > Data point configuration**.
2. Press the **Reset** button.
   ⇨ The message Reset appears.
3. Press the **Yes** button to reset the data point configuration to the factory settings.
4. Restart the device to activate the modified list of data points.

9.7.8.7 Exporting and importing the data point configuration

You can export the data point configuration, e.g., to back it up or import it into another device. You will find more information in the Import/Export Manager [▶ Section 9.36, Page 323] section.

9.7.9 Display status of the SCADA connection

This display shows you the status of the connection to the control system. The following information is displayed:

- Connected: The device has established a connection to the control system.
- Rx: The device has received a message from the control system.
- Tx: The device has transmitted a message to the control system.

The display is not available for the Modbus ASCII, Modbus RTU, Modbus TCP or DNP3 serial control systems.

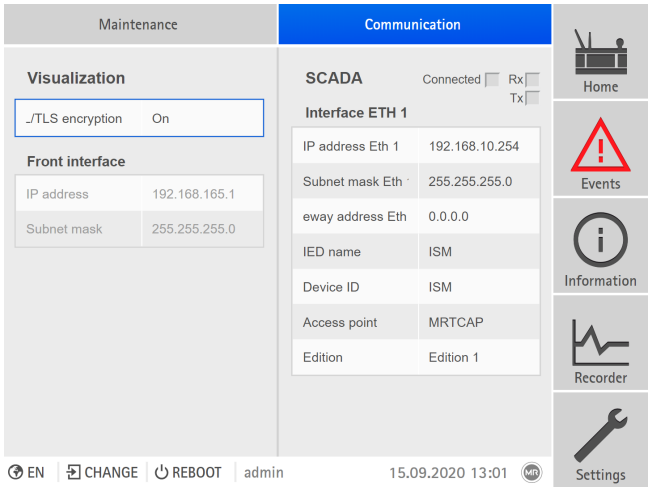

Figure 98: Communication

► Go to **Home > Communication**.

9.8 Name plate

You can enter the data of the name plates, the on-load tap-changer and the motor-drive unit and display it later.

9.8.1 Enter the name plate data

You can enter the name plate data for the transformer, the on-load tap-changer and the motor-drive unit.

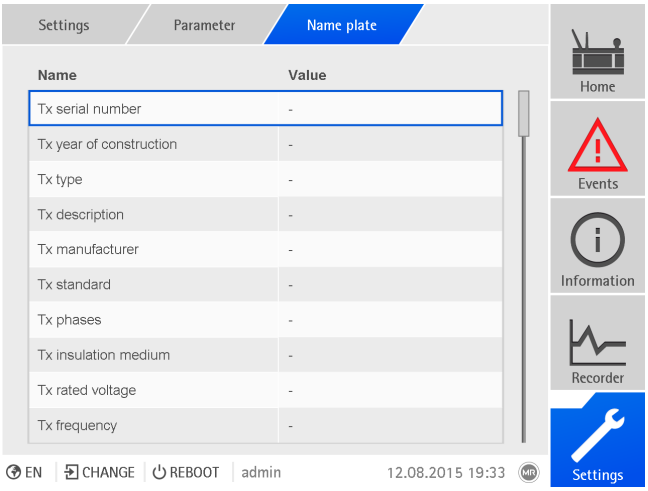

Figure 99: Nameplate

1. Go to **Settings > Parameters > System > Nameplate**.
2. Select the desired parameter.
3. Set the parameter.
4. Press the **Accept** button to save the modified parameter.

9.8.2 Displaying the name plate

You can display the nameplate data for the transformer, on-load tap-changer, and motor-drive unit.

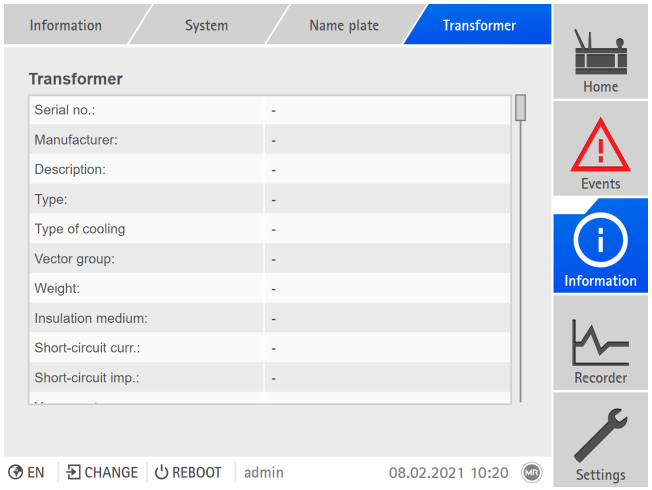

Figure 100: Transformer nameplate

► Go to **Information > System > Nameplate > Transformer/On-load tap-changer/Motor-drive unit**.

9.9 Linking signals and events

The device enables you to link digital inputs (GPI) and control system commands (SCADA) with device functions, digital outputs (GPO), and control system messages.

The digital inputs available are each permanently linked to a *Generic digital input* event message and the control system commands available are each permanently linked to a*Generic SCADA command* event message for this purpose.

Input/command	Event message
Digital input 1[1)]	Generic digital input 1
Digital input 2[1)]	Generic digital input 2
...	...
Digital input 42[1)]	Generic digital input 42
Generic SCADA command 1	Generic SCADA command 1
Generic SCADA command 2	Generic SCADA command 2
...	...
Generic SCADA command 10	Generic SCADA command 10

Table 41: Linking of digital inputs and control system commands with event messages

[1)] The number of available digital inputs depends on the order-specific device configuration.

You can link the event messages with device functions, digital outputs, and control system messages. You can also link all other event messages (e.g. *Undervoltage U*<) with digital outputs and control system messages. Corresponding parameters, for which you need to enter the relevant event number, are provided for this purpose.

9.9.1 Linking functions

You can link the *Generic digital input* or *Generic SCADA command* events with device functions. This allows you to remotely control the device using digital inputs or commands via the control system (SCADA). Depending on your device configuration, various functions are available for this purpose via parameters.

In order to establish the link, you have to enter the corresponding event number in the desired parameter.

Note that you can only enter the event numbers of the *Generic digital input* or *Generic SCADA command* events.

If you enter event number 500, the link is disabled.

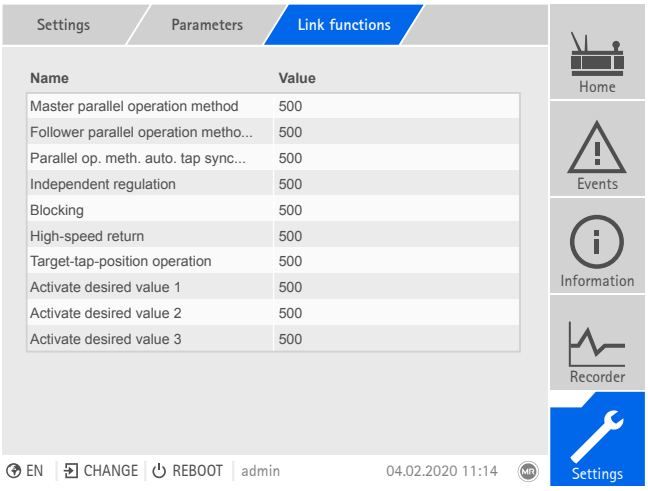

Figure 101: Linking functions

✓ The desired event number is known.

1. Go to **Settings > Parameters > System > Link functions**.
2. Select the desired parameter.
3. Enter the desired event number.
4. Press the **Accept** button to save the modified parameter.

Master parallel operation method

If the assigned event is active, the device activates the master parallel operation method.

Follower parallel operation method

If the assigned event is active, the device activates the follower parallel operation method.

Automatic tap synchronization parallel operation method

If the assigned event is active, the device activates the automatic tap synchronization parallel operation method.

Independent regulation

If the assigned event is active, the device activates the independent regulation independent mode.

Deactivate parallel operation

If the assigned event is active, the device deactivates the parallel operation.

Blocking

If the assigned event is active, automatic control is blocked.

Activate remote mode

If the assigned event is active, the device activates remote mode.

High-speed return

If the assigned event is active, the device activates high-speed return. With high-speed return, the device ignores the set delay time of automatic voltage regulation.

Target-tap-position operation

If the assigned event is active, the device switches to the defined target tap position.

Activate desired value 1

If the assigned event is active, the device activates the desired value 1.

Activate desired value 2

If the assigned event is active, the device activates the desired value 2.

Activate desired value 3

If the assigned event is active, the device activates the desired value 3.

Activate desired value 4

If the assigned event is active, the device activates the desired value 4.

Activate desired value 5

If the assigned event is active, the device activates the desired value 5.

Increase desired value

If the assigned event is active, the device prompts an increase in the desired value.

Decrease desired value

If the assigned event is active, the device prompts a decrease in the desired value.

9.9.2 Linking digital outputs

You can link each event with a digital output. The device provides a maximum of 20 digital outputs for this purpose. When you link a digital output to an event, the device issues a signal to this output if the event occurs. The signal persists until the event stops. A parameter is available for each available digital output.

To forward input signals or control system commands, you need to link the digital outputs or control system messages with the *Generic digital input* or *Generic SCADA command* events.

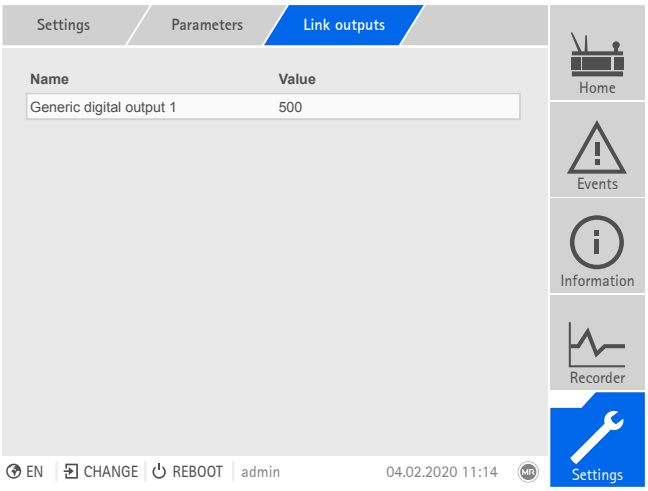

Figure 102: Linking digital outputs

✓ The desired event number is known [▶Section 9.33, Page 309].

1. Go to **Settings > Parameters > System > Link outputs**.
2. Select the desired parameter.
3. Enter the desired event number.
4. Press the **Accept** button to save the modified parameter.

Generic digital output X

You can use this parameter to link the digital output with an event message. To do so, enter the desired event number.

If you enter event number 500, the link is disabled.

9.9.3 Linking control system messages

You can link each event with a control system message. The device provides 10 SCADA messages for this purpose. When you link a SCADA message to an event, the device sets the data point to "On" when the event occurs. When the event stops, the device sets the data point to "Off". A parameter is available for each available SCADA message.

To forward control system commands, you need to link the control system messages to the *Generic digital input* or *Generic SCADA command* events.

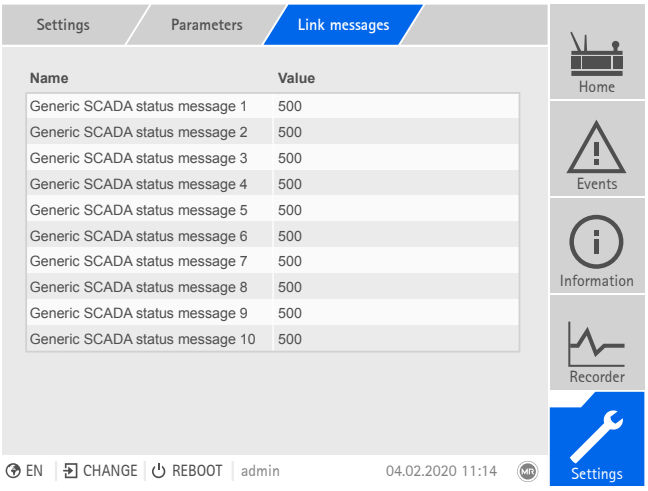

Figure 103: Linking SCADA messages

✓ The desired event number is known.

1. Go to **Settings > Parameters > System > Link messages**.
2. Select the desired parameter.
3. Enter the desired event number.
4. Press the **Accept** button to save the modified parameter.

Generic SCADA message X

You can use this parameter to link the SCADA message with an event message. To do so, enter the desired event number.

If you enter event number 500, the link is disabled.

9.10 Cooling system control (optional)

You can use the cooling system control function package to control and/or monitor up to 6 cooling stages depending on device configuration.

9.10.1 Configuring cooling stages

To control the cooling system, you have to set the following parameters for each cooling group:

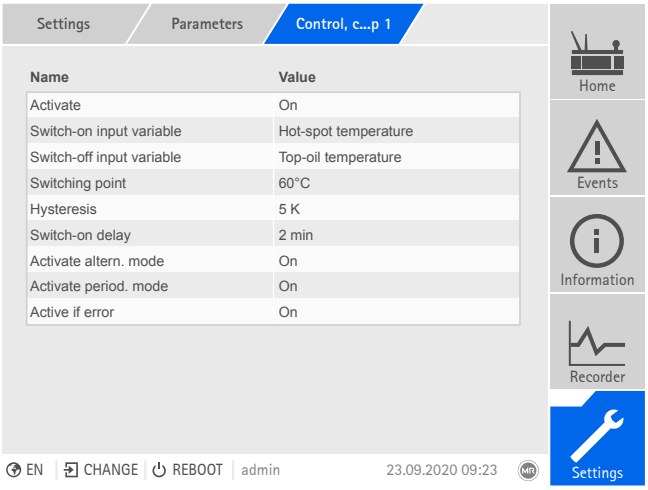

Figure 104: Cooling stage

1. Go to **Settings > Parameters > Cooling system > Cooling group X control**.
2. Select the desired parameter.
3. Set the parameter.
4. Press the **Accept** button to save the modified parameter.

Activate

You can use this parameter to activate or deactivate the cooling stage.

- On: The cooling stage is used for cooling system control.
- Off: The cooling stage is not used for cooling system control.

Activate cooling stage X

In the "Manual" operating mode [▶Section 9.10.2, Page 151], you can use this parameter to start and stop the cooling stage.

If you have started the cooling stages manually and a power failure occurs, the device restarts the cooling stages once power has been restored.

Switch on input variable

You can use this parameter to set which measured temperature value is to be used to switch on the cooling stage. You can select the following options:

- Upper oil temperature
- Hot-spot temperature
- Ambient temperature
- Lower oil temperature
- OLTC oil temperature
- Generic temperature

Switch off input variable

You can use this parameter to set which measured temperature value is to be used to switch off the cooling stage. You can select the following options:

- Upper oil temperature
- Hot-spot temperature
- Ambient temperature
- Lower oil temperature
- OLTC oil temperature
- Generic temperature

Switching point

You can use this parameter to set the temperature at which the cooling stage is to be switched on or off. If the temperature exceeds the switching point, the cooling stage is switched on. If the temperature is less than the switching point minus the optional hysteresis, the cooling stage is switched off.

Hysteresis

You can use this parameter to set a hysteresis below the switching point. The cooling stage is only switched off if the temperature is less than the switching point minus the hysteresis.

Switch-on delay

You can use this parameter to set the switch-on delay for the cooling stage. The cooling stage is only switched on if the measured temperature is higher than the switching point for longer than the set switch-on delay.

Alternating mode

You can use this parameter to activate alternating mode [▶ Section 9.10.6, Page 154] for the cooling stage.

Periodic mode

You can use this parameter to activate periodic mode [▶Section 9.10.5, Page 153] for the cooling stage.

Active if error

You can use this parameter to set whether the device is to activate the cooling stage in the event of an error (fail-safe mode). The following types of error are recognized:

- The input signal for the temperature is in an impermissible range (e.g. cable break, sensor defective)
- The transformer load current is in an impermissible range

9.10.2 Set the operating mode

You can use this parameter to set the cooling system control operating mode. You can select the following options:

- Automatic: The device starts and stops the individual cooling stages automatically.
- Manual: You can start and stop the individual cooling stages via the visualization [▶Section 9.10.1, Page 149] or the control system.

To set the operating mode, proceed as follows:

1. Go to **Settings > Parameters > Cooling system > Cooling system control > Operating mode**.
2. Select the desired option.
3. Press the **Accept** button to save the modified parameter.

9.10.3 Deactivating cooling system control

Via a signal at the digital input *I: Deactivate ISM cooling system control* you can deactivate the cooling system control, for example to control the cooling stages via an external device. When configuring the digital input, refer to the section Configuring digital inputs and outputs [▶Section 9.30, Page 292].

9.10.4 Configuring load-dependent mode

In load-dependent mode all cooling stages are activated if the load current of the transformer is greater than the set switching point. You can set the switching point as a percentage in relation to the transformer rated current.

Once the switch-on delay has elapsed, the cooling stages are activated. To limit the inrush current of the cooling stages, they are activated one after another with a delay time of 60 seconds.

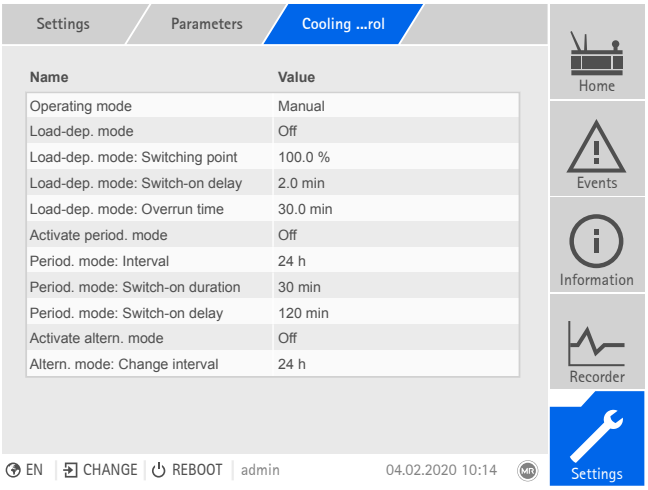

Figure 105: Cooling system control

To use this function, you need to activate the corresponding cooling stage [▶Section 9.10.1, Page 149].

1. Go to **Settings > Parameters > Cooling system > Cooling system control**.
2. Select the desired parameter.
3. Set the parameter.
4. Press the **Accept** button to save the modified parameter.

Activate load-dependent mode

You can use this parameter to activate the load-dependent mode of the cooling system control.

Load-dependent mode: Switching point

You can use this parameter to set the switching threshold as a percentage in relation to the nominal current of the transformer. All cooling stages are activated if the load current of the transformer is greater than the set switching point.

Load-dependent mode: Switch-on delay

You can use this parameter to set the delay time for switching on the first cooling stage.

Load-dependent mode: Overrun time

You can use this parameter to set the time period for which the cooling stages remain switched on when the transformer load current returns to a value below the set switching point.

9.10.5 Configuring periodic mode

Periodic mode is used to prevent the bearings of the cooling stages from seizing up as a result of long idle periods. To do this, the cooling stages are operated for a certain period at regular intervals regardless of the measured temperature. You can activate/deactivate periodic mode individually for every cooling stage (Configuring cooling stages [▶Section 9.10.1, Page 149]).

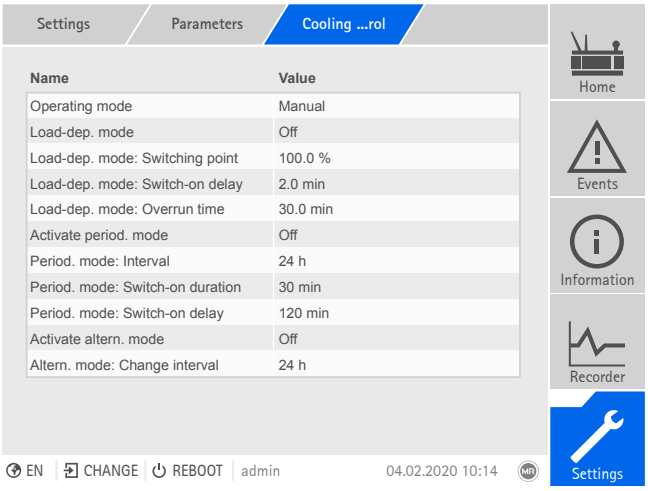

Figure 106: Cooling system control

1. Go to **Settings > Parameters > Cooling system > Cooling system control**.
2. Select the desired parameter.
3. Set the parameter.
4. Press the **Accept** button to save the modified parameter.

Activate periodic mode

You can use this parameter to activate the periodic mode of the cooling system control.

Periodic mode: Interval

You can use this parameter to set the time period after which the cooling stages are to be switched on for the first time.

Periodic mode: Switch-on duration

You can use this parameter to set the length of time that the cooling stages are to be switched on for.

Periodic mode: Switch-on delay

You can use this parameter to set the time period after which the cooling stages are to be switched back on again.

9.10.6 Configuring alternating mode

If the transformer is equipped with several similar cooling stages, you can run the stages in alternating mode. In alternating mode, each of the cooling stages is run in turn to evenly distribute the load of the cooling stages. You can activate/deactivate alternating mode individually for every cooling stage (Configuring cooling stages [▶ Section 9.10.1, Page 149]).

Only use alternating mode for similar cooling stages.

Example: If you activate alternating mode for 2 cooling stages and set a change interval of 24 h, then cooling stage 1 is switched off after 24 h and cooling stage 2 is switched on. After another 24 h, cooling stage 2 is switched off and cooling stage 1 is switched on, etc.

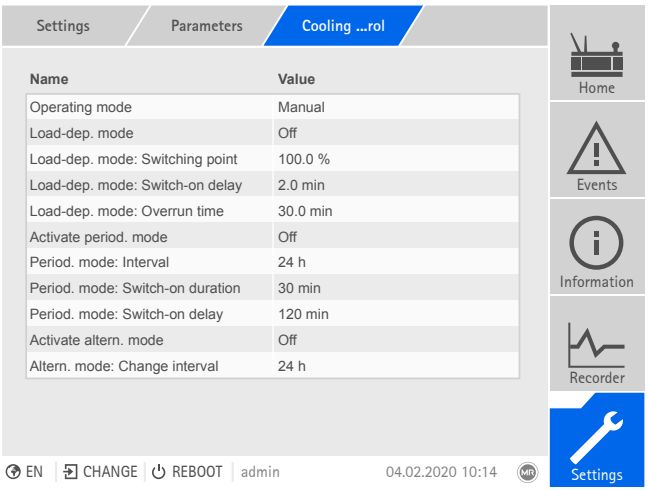

Figure 107: General cooling

1. Go to **Settings > Parameters > Cooling system > Cooling system control**.
2. Select the desired parameter.
3. Set the parameter.
4. Press the **Accept** button to save the modified parameter.

Activate alternating mode

You can use this parameter to activate the alternating mode of the cooling system control.

Alternating mode: Change interval

You can use this parameter to set the time period after which the cooling stage is to be changed.

9.10.7 Configuring the frequency-based cooling system control

The optional frequency-based cooling system control function lets you control the fans in a cooling system using the frequency. The device calculates the fan speed based on the temperature of the top-oil and the load factor. The device uses the highest speed derived based on the configured dependencies.

The device outputs the fan speed as an analog signal (0...10 V), using inverse logic in the process: 100% = 0 V, 0% = 10 V. The device records the status of the connected frequency converter using inverse logic (low active).

Fan speed based on the top-oil temperature

If the top-oil temperature is less than the lower threshold, then the device uses the minimum fan speed. If the top-oil temperature is greater than the upper threshold, then the device uses the maximum fan speed. If the top-oil temperature is between the lower threshold and upper threshold, then the device calculates the necessary speed using a straight line between both points S1 and S2.

The following diagrams show an example of a graph of the fan speeds based on the top-oil temperature according to the set parameters.

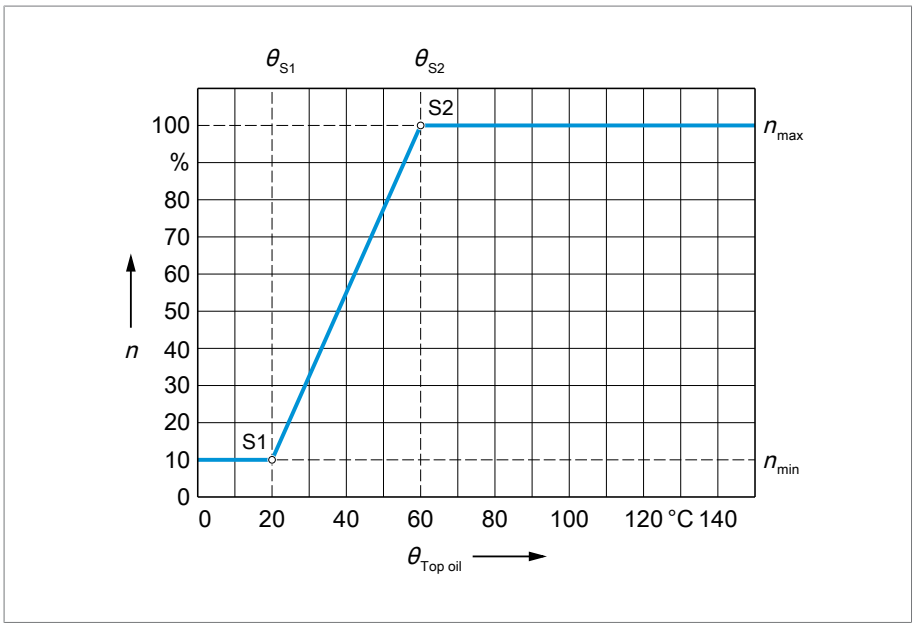

Figure 108: Fan speed based on the top-oil temperature

n	Fan speed	$\theta_{Top\text{-}oil}$	Top-oil temperature
n_{min}	Minimum fan speed	n_{max}	Maximum fan speed
θ_{S1}	Lower threshold for top-oil temp.	θ_{S2}	Upper threshold for top-oil temp.

Fan speed based on load factor

The load factor is the ratio of load current to nominal current. If the load factor is less than the lower threshold, then the device uses the minimum fan speed. If the load factor is greater than the upper threshold, then the device uses the maximum fan speed. If the load factor is between the lower threshold and upper threshold, then the device calculates the necessary speed using a straight line between both points S1 and S2.

The following diagrams show an example of a graph of the fan speeds based on the load factor according to the set parameters.

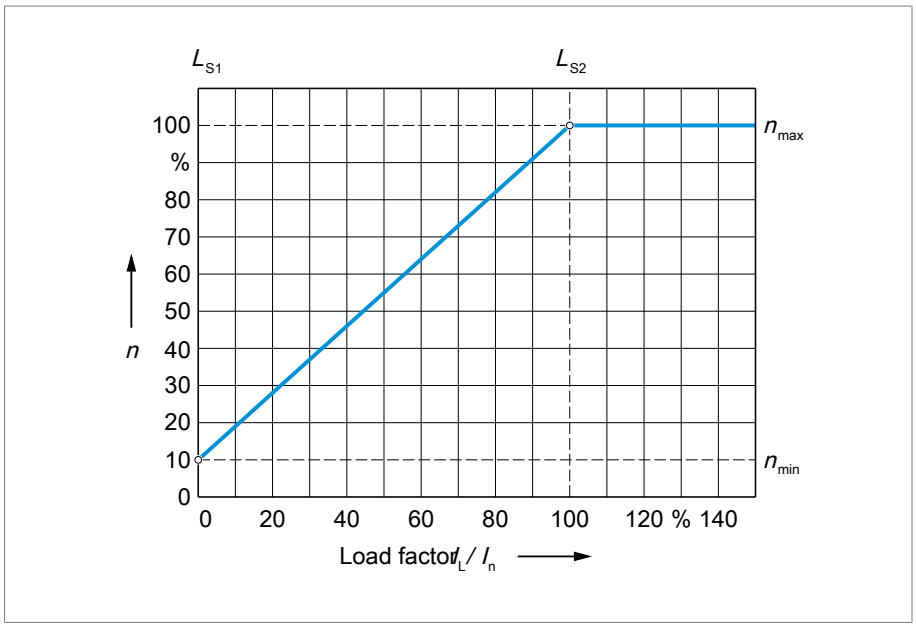

Figure 109: Fan speed based on load factor

n	Fan speed	$\theta_{Top\text{-}oil}$	Top-oil temperature
n_{min}	Minimum fan speed	n_{max}	Maximum fan speed
L_{S1}	Lower load factor threshold	L_{S2}	Upper load factor threshold

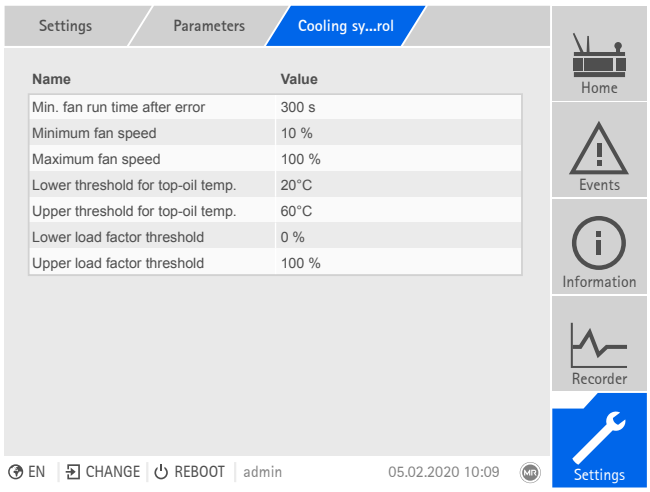

Figure 110: Frequency-based cooling system control

1. Go to **Settings > Parameters > Cooling system > Cooling system control**.
2. Select the desired parameter.
3. Set the parameter.
4. Press the **Accept** button to save the modified parameter.

Min. fan run time after error

You can use this parameter to set how long the fans are to continue running if an error occurs in the cooling system control. The fans run at full power for this duration.

Minimum fan speed

You can use this parameter to set the minimum fan speed.

Maximum fan speed

You can use this parameter to set the maximum fan speed.

Upper top-oil temperature threshold

You can use this parameter to set the top-oil temperature at which the fans are to run at maximum speed.

Lower top-oil temperature threshold

You can use this parameter to set the top-oil temperature at which the fans are to run at minimum speed.

Upper load factor threshold

You can use this parameter to set the load factor at which the fans are to run at maximum speed.

Lower load factor threshold

You can use this parameter to set the load factor at which the fans are to run at minimum speed.

9.10.8 Displaying status of cooling stages

You can display the status of the cooling stages. The following information is available to you for every cooling stage:

- Status
  - Gray: Cooling stage inactive
  - Blue: Cooling stage active
  - Yellow, red: Event message
- Number of starts
- Operating time
- Parameter set
  - Delay time
  - Hysteresis
  - Switch-on threshold

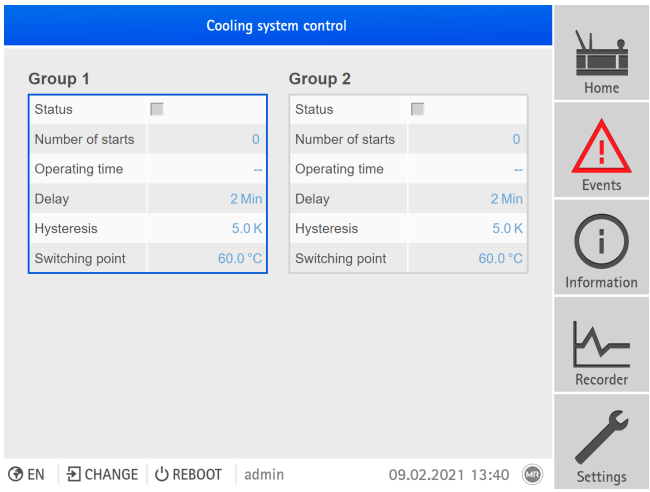

Figure 111: Status of cooling stages

► Go to **Information > Cooling system > Cooling system control**.

9.11 Cooling system monitoring (optional)

With the optional cooling monitoring function, you can monitor the cooling system of a transformer.

9.11.1 Setting the cooling system monitoring function

You can set the general cooling system monitoring functions with the following parameters.

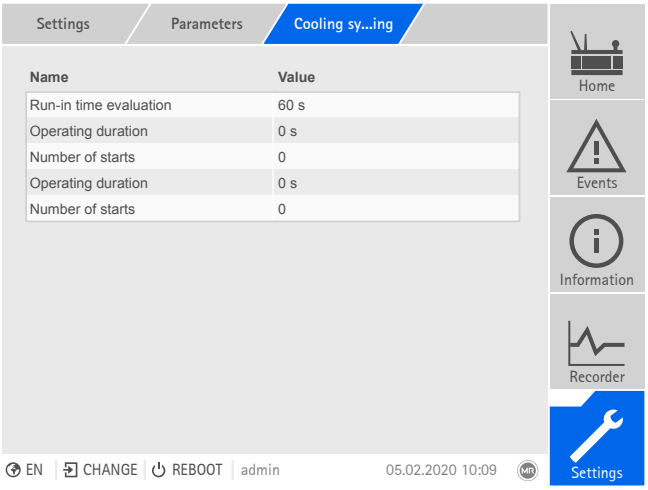

Figure 112: Cooling system monitoring

1. Go to **Settings > Parameters > Cooling system > Cooling system monitoring**.
2. Select the desired parameter.
3. Set the parameter.
4. Press the **Accept** button to save the modified parameter.

Run-in time evaluation

You can use this parameter to set the length of time a cooling stage has to be active before the device performs an evaluation of the values to be monitored for the "Cooling system flow monitoring" function. This is used to prevent incorrect event messages during the cooling system startup process.

Number of starts

The device records the number of starts of the cooling stage. You can use this parameter to reset the number of starts of the relevant cooling stage if you have replaced fans or pumps on the cooling system, for example.

Operating duration

The device records the operating duration of the cooling stage. You can use this parameter to reset the operating duration of the relevant cooling stage if you have replaced fans or pumps on the cooling system, for example.

9.11.2 Cooling efficiency monitoring (optional)

The device can monitor the efficiency of a cooling system. To do this, the device evaluates the cooling efficiency using the following values:

- Thermal resistance R_{th}
- Comparison of the measured and the calculate upper oil temperature
- Comparison of the cooling system feed temperature and return temperature

9.11.2.1 Setting the cooling efficiency monitoring function

For cooling efficiency monitoring, you have to set the following parameters.

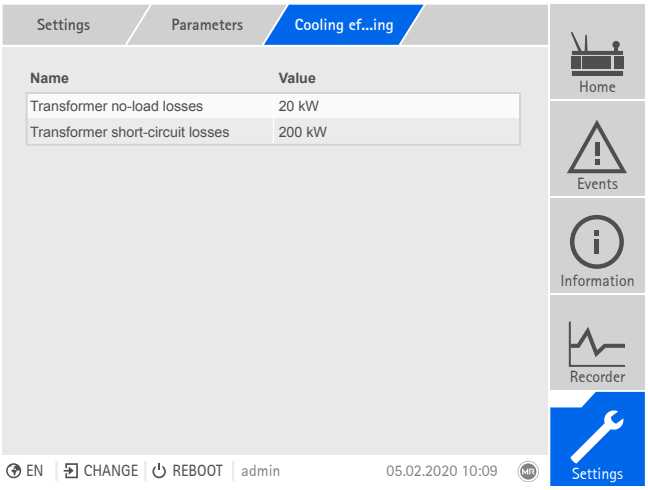

Figure 113: Cooling efficiency monitoring

1. Go to **Settings > Parameters > Cooling system > Cooling efficiency monitoring**.
2. Select the desired parameter.
3. Set the parameter.
4. Press the **Accept** button to save the modified parameter.

Transformer short-circuit losses

You can use this parameter to set the transformer short-circuit losses (copper losses) P_{CU} for calculating the thermal resistance of the cooling system.

Transformer no-load losses

You can use this parameter to set the transformer no-load losses P_0 for calculating the thermal resistance of the cooling system.

9.11.2.2 Displaying the cooling efficiency

You can display the temporal progression of the average value of the thermal resistance R_{th} of the cooling system over the last 10 days.

Figure 114: Cooling efficiency

► Go to **Information > Cooling system > Cooling efficiency**.

9.11.3 Cooling system flow monitoring (optional)

The device can monitor a cooling system with 2 oil-water cooling stages. To do this, the device monitors the following values for the cooling media oil and water:

- Temperature
  - Feed
  - Return
  - Difference feed/return (oil only)
- Pressure
- Flow rate
- Pump current consumption

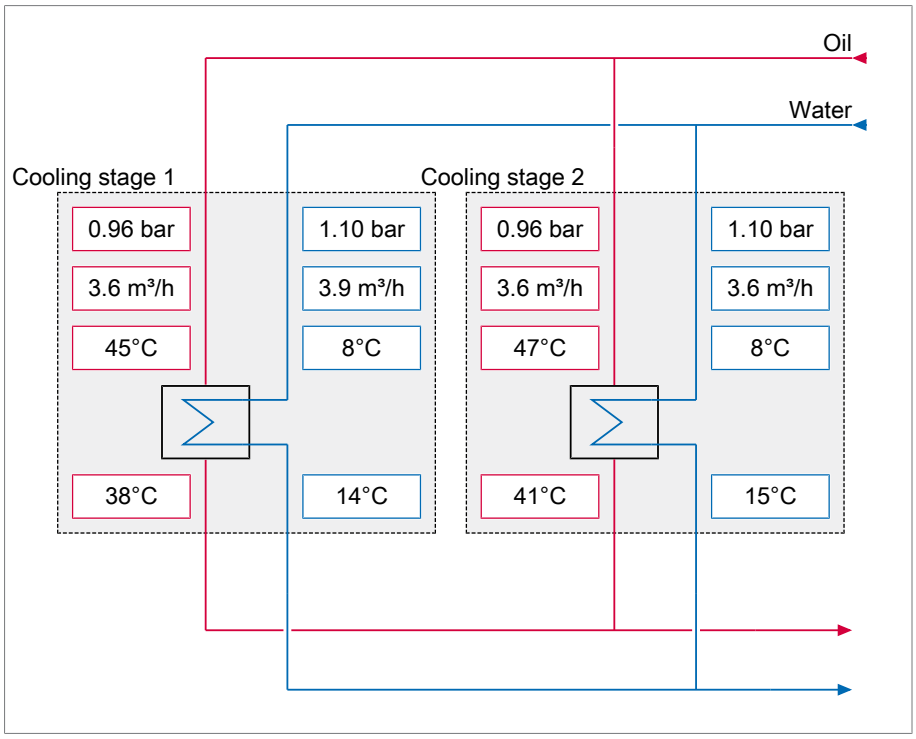

Figure 115: Cooling system flow monitoring values

9.11.3.1 Setting the cooling system flow monitoring function

You can set the following limit values for the cooling media oil and water respectively for monitoring the cooling system flow:

Measured value	Lower limit 2	Lower limit 1	Upper limit 1	Upper limit 2
Feed temperature	<<	<	>	>>
Return temperature	<<	<	>	>>
Temperature difference	<<	<	-	-
Pressure	<<	<	-	-
Flow rate	<<	<	-	-
Pump current	<<	<	>	>>

Table 42: Limit values for cooling system flow monitoring

Behavior If the measured value is higher than the upper limit (> or >>) or lower than the lower limit (< or <<), the device triggers an event message.

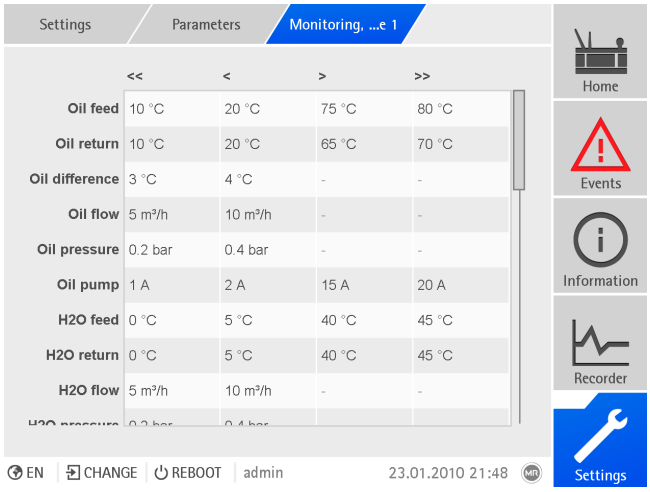

Figure 116: Monitoring, cooling stage 1

1. Go to **Settings > Parameters > Cooling system > Cooling stage 1/2 monitoring**.
2. Select the desired parameter.
3. Set the desired parameter.
4. Press the **Accept** button to save the modified parameter.

Feed oil temperature

You can use these parameters to set the limit values for the permissible feed temperature of the oil circuit. You can set two upper and two lower limit values for each cooling stage.

Return oil temperature

You can use these parameters to set the limit values for the permissible return temperature of the oil circuit. You can set two upper and two lower limit values for each cooling stage.

Oil temperature difference

You can use these parameters to set the limit values for the permissible temperature difference between the feed and return of the oil circuit. You can set two lower limit values for each cooling stage.

$$\Delta\theta = \theta_{flow} - \theta_{return}$$

$\Delta\theta$	Temperature difference	θ_{flow}	Feed temperature
θ_{return}	Return temperature		

Oil pressure

You can use these parameters to set the limit values for the permissible pressure of the oil circuit. You can set two lower limit values for each cooling stage.

Oil flow

You can use these parameters to set the limit values for the permissible flow rate of the oil circuit. You can set two lower limit values for each cooling stage.

Oil pump current

You can use these parameters to set the limit values for the permissible current consumption of the oil circuit pump. You can set two upper and two lower limit values for each cooling stage.

Feed water temperature

You can use these parameters to set the limit values for the permissible feed temperature of the water circuit. You can set two upper and two lower limit values for each cooling stage.

Return water temperature

You can use these parameters to set the limit values for the permissible return temperature of the water circuit. You can set two upper and two lower limit values for each cooling stage.

Water pressure

You can use these parameters to set the limit values for the permissible pressure of the water circuit. You can set two lower limit values for each cooling stage.

Water flow

You can use these parameters to set the limit values for the permissible flow rate of the water circuit. You can set two lower limit values for each cooling stage.

Water pump current

You can use these parameters to set the limit values for the permissible current consumption of the water circuit pump. You can set two upper and two lower limit values for each cooling stage.

9.11.3.2 Displaying the cooling system flow

You can display the temporal progression of the measured values of the cooling system flow monitoring over the last 10 days.

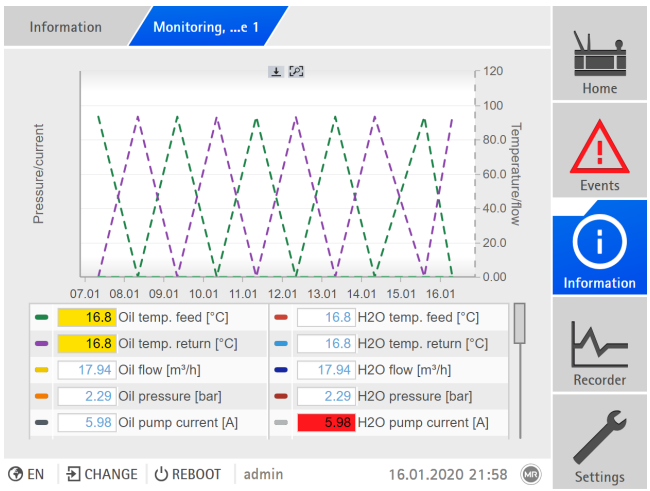

Figure 117: Cooling system flow

► Go to **Information > Cooling system > Cooling stage 1/2**.

9.12 Drive overview

The overview display of the motor-drive unit shows you the following information:

- Current tap position, including drag hands
- Display of tap-change indicator sections (SSE, optional)
- Operations counter
- Status messages
  - Operating mode
  - Switching blocking (optional)
  - Motor protective switch
  - Control cabinet door open/closed
- Ambient temperature (optional)
- Internal temperature of the motor-drive unit (optional)
- Next maintenance (optional)

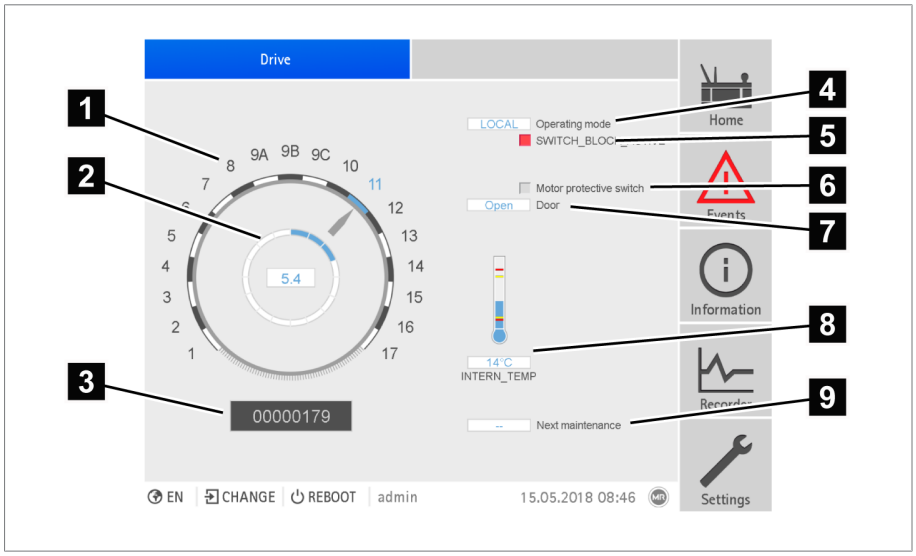

Figure 118: Drive overview

1	Tap position	2	Tap-change indicator section (SSE)
3	Operation counter	4	Operating mode
5	Switching blocking	6	Motor protective switch
7	Door open/closed	8	Temperatures
9	Next maintenance		

► Go to **Information > Motor and control cabinet > Drive**.

9.13 Displaying power characteristics

You can display the recorded power characteristics of the motor-drive unit for the last 1000 tap-change operations. The following data is displayed:

- Tap position
- Active power of motor-drive unit
- Active power limit value

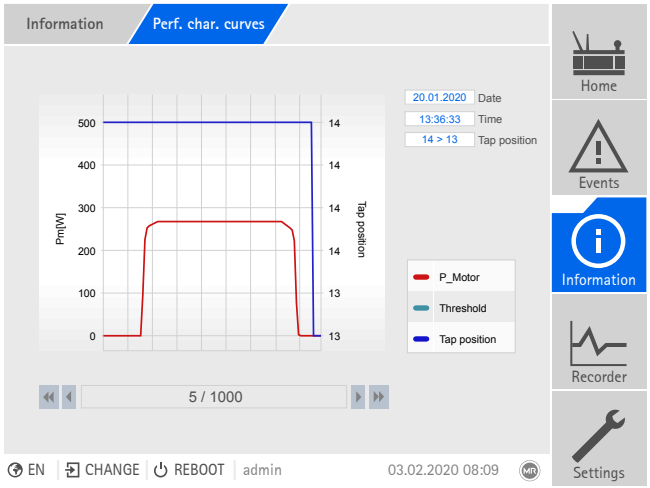

Figure 119: Displaying power characteristics

► Go to **Information > On-load tap-changer > Power characteristics**.

9.14 Regulation

The general functions for regulating the on-load tap-changer are described in this section.

9.14.1 Response to control system disconnection (optional)

If your device is equipped with a connection to a control system (SCADA), you can use the following parameters to set how the device is to behave if the connection to the control system is interrupted.

This function only works in the REMOTE operating mode.

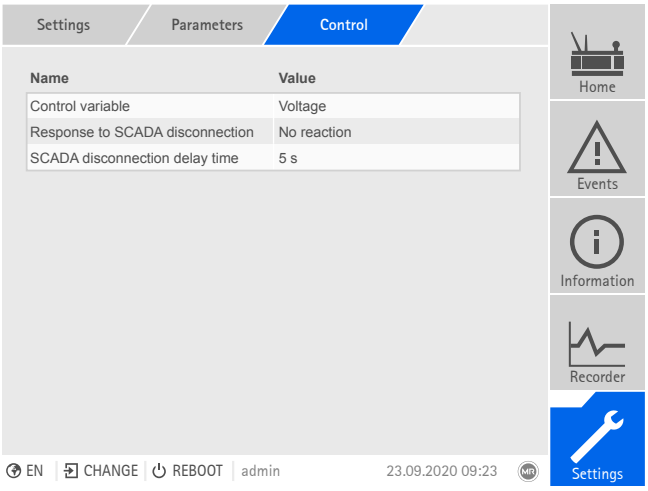

Figure 120: Regulation

1. Go to **Settings > Parameters > On-load tap-changer regulator > Regulation**.
2. Select the desired parameter.
3. Set the desired parameter.
4. Press the **Accept** button to save the modified parameter.

Response to SCADA disconnection

You can use this parameter to set the behavior of the device when the connection to the control system is interrupted. You can select the following options:

- No response: The device remains in the current operating mode.
- Switchover to auto mode: The device switches to auto mode.
- Desired value 1…5: The device uses the selected voltage desired value. This desired value will also continue to be used once the connection is reestablished. Depending on the device configuration, you can select up to 5 desired values.

SCADA disconnection delay time

You can use this parameter to set the delay time before the device responds to the SCADA interruption. If the connection to the control system is interrupted for longer than the delay time, the device triggers an event and responds with the set behavior.

9.14.2 Setting control variable (optional)

If the device is equipped with the optional power regulation function, you can set which control variable the device should regulate.

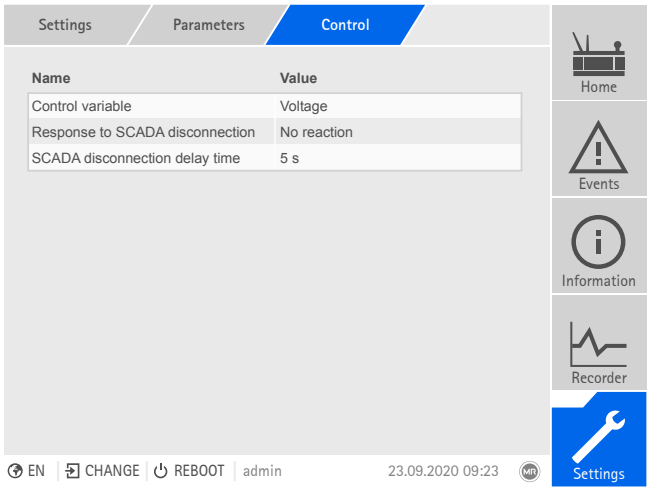

Figure 121: Regulation

1. Go to **Settings > Parameters > On-load tap-changer regulator > Regulation**.
2. Select the desired parameter.
3. Set the desired parameter.
4. Press the **Accept** button to save the modified parameter.

Control variable

You can use this parameter to set which control variable the device is to regulate. You can select the following options:

- Voltage
- Reactive power

Depending on your selection, the device uses the associated parameter set for each option (desired value, bandwidth, etc.).

Standard regulation mode

You can set use this parameter to set the operating mode of the on-load tap-changer regulation.

9.15 Voltage regulation

All of the parameters required for voltage regulation are described in this section.

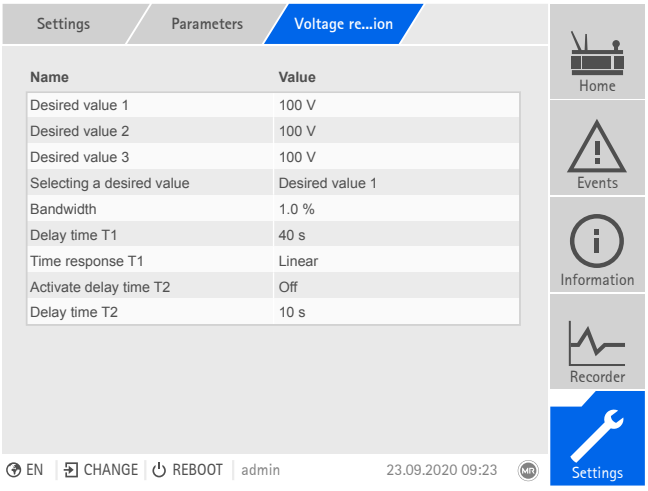

Figure 122: Voltage regulation (example)

1. Go to **Settings > Parameters > On-load tap-changer regulator > Voltage regulation**.
2. Select the desired parameter.
3. Set the desired parameter.
4. Press the **Accept** button to save the modified parameter.

9.15.1 Setting the desired value

In accordance with the order, the device is equipped with one of the following variants for setting the desired value:

9.15.1.1 Desired value 1

1. Go to **Settings > Parameters > Grid > Control > Desired value**.
2. Enter the desired value.
3. Press the **Accept** button to save the modified parameter.

9.15.1.2 Desired value 1...3

You can set 3 different desired values. The device always uses one of the set desired values for control. You can define the desired value used for control by means of the "Select desired value" parameter or with the digital inputs.

The device only processes commands via digital inputs or the control system when it is in the Remote mode. You must also set the Remote behavior [▶Page 101] parameter accordingly.

Setting the desired value

1. Go to **Settings > Parameters > Grid > Control > Desired value**.
2. Enter the desired value.
3. Press the **Accept** button to save the modified parameter.

Selecting a desired value

You can use this parameter to select the desired value used for control.

1. Go to **Settings > Parameters > Grid > Control > Select desired value**.
2. Select the desired value from the list.
3. Press the **Accept** button to save the modified parameter.

9.15.1.3 Desired value 1...5

You can set 5 different desired values. The device always uses one of the set desired values for control. You can define the desired value used for control by means of the "Select desired value" parameter or with the digital inputs.

The device only processes commands via digital inputs or the control system when it is in the Remote mode. You must also set the Remote behavior [▶Page 101] parameter accordingly.

Setting the desired value

1. Go to **Settings > Parameters > Grid > Control > Desired value**.
2. Enter the desired value.
3. Press the **Accept** button to save the modified parameter.

Selecting a desired value

You can use this parameter to select the desired value used for control.

1. Go to **Settings > Parameters > Grid > Control > Select desired value**.
2. Select the desired value from the list.
3. Press the **Accept** button to save the modified parameter.

9.15.1.4 Analog setting of the desired value

With the analog setting of the desired value, the desired value for the automatic voltage regulation can be variably adapted using an analog signal (e.g. 4...20 mA).

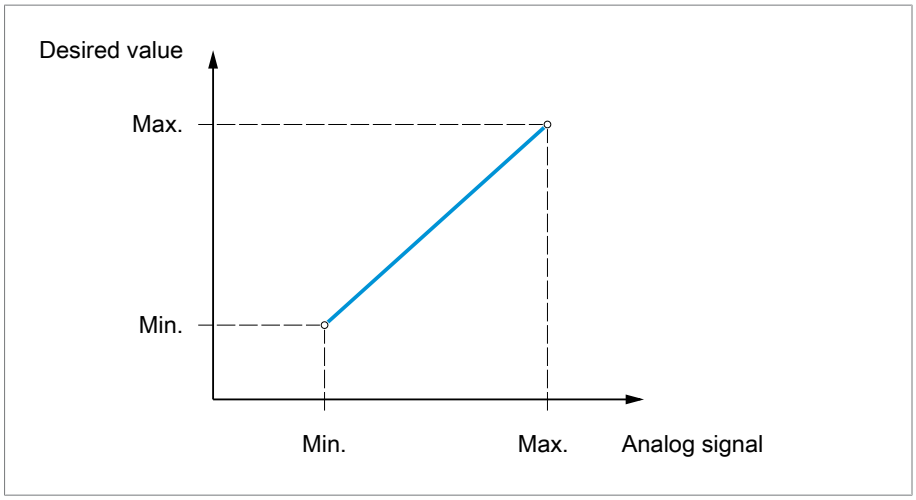

Figure 123: Analog setting of the desired value

In order to configure the analog setting of the desired value, you can set the parameters as described below.

To specify the desired value using an analog signal, you need to create a signal at the *Desired value setting release* input. If this is not done, the device uses the set desired value 1.

Setting desired value 1

1. Go to **Settings > Parameters > Grid > Control > Desired value**.
2. Enter the desired value.
3. Press the **Accept** button to save the modified parameter.

Setting max. desired value setting

With this parameter, you can set the desired value that corresponds to the maximum level of the analog signal level (e.g. 20 mA for 4...20 mA signal).

1. Go to **Settings > Parameters > Control > Setting max. desired value**.
2. Enter desired value.
3. Press the **Accept** button to save the modified parameter.

Setting min. desired value setting

With this parameter, you can set the desired value that corresponds to the minimum level of the analog signal (e.g. 4 mA for 4...20 mA signal).

1. Go to **Settings > Parameters > Control > Setting min. desired value**.
2. Enter desired value.

3. Press the **Accept** button to save the modified parameter.

9.15.1.5 Step-by-step setting of the desired value

For the step-by-step setting of the desired value, you can increase or decrease the desired value for the automatic voltage regulation by an adjustable step width using digital inputs or control system commands.

For each "Increase desired value" or "Decrease desired value" command, the active desired value is increased or decreased by the set step width. It is not possible to set desired values outside of the permitted setting range (49...140 V).

The device only processes commands via digital inputs or the control system when it is in the Remote mode. You must also set the Remote behavior [▶Page 101] parameter accordingly.

In order to configure the step-by-step setting of the desired value, you can set the parameters as described below.

Setting desired value 1

1. Go to **Settings > Parameters > Grid > Control > Desired value**.
2. Enter the desired value.
3. Press the **Accept** button to save the modified parameter.

Setting desired value step width

To set the desired value sep width, proceed as follows:

1. Go to **Settings > Parameters > Control > Desired value step width**.
2. Enter desired value step width.
3. Press the **Accept** button to save the modified parameter.

9.15.1.6 Active power-dependent adjustment of desired voltage value

The TAPCON® Dynamic Setpoint Control (TDSC) function is used to adapt the desired voltage value depending on the measured active power. This allows you to compensate for a voltage drop during increased load or an increase in voltage due to a decentralized feed-in.

Depending on whether positive or negative active power is measured, the desired value calculation is based on 2 linear equations (see example in diagram below).

Parameter	Function	Settings (see diagram below)
U_{max}: Maximum desired value	Maximum set desired value is activated when P_{max} is exceeded.	103.0 V
U_{min}: Minimum desired value	Minimum set desired value is activated when value falls below P_{min}.	99.0 V
U_0: Desired value at 0 active power	Set desired value is activated when measured active power is 0 MW.	100.00 V
P_{max}: Active power at max. desired value	Set maximum active power value above which the power-dependent desired value is to attain the maximum value U_{max}.	20.0 MW
P_{min}: Active power at min. desired value	Set minimum active power value below which the power-dependent desired value is to attain the minimum value U_{min}.	-20.0 MW

Table 43: Parameters to be set for active power-dependent adjustment of desired voltage value

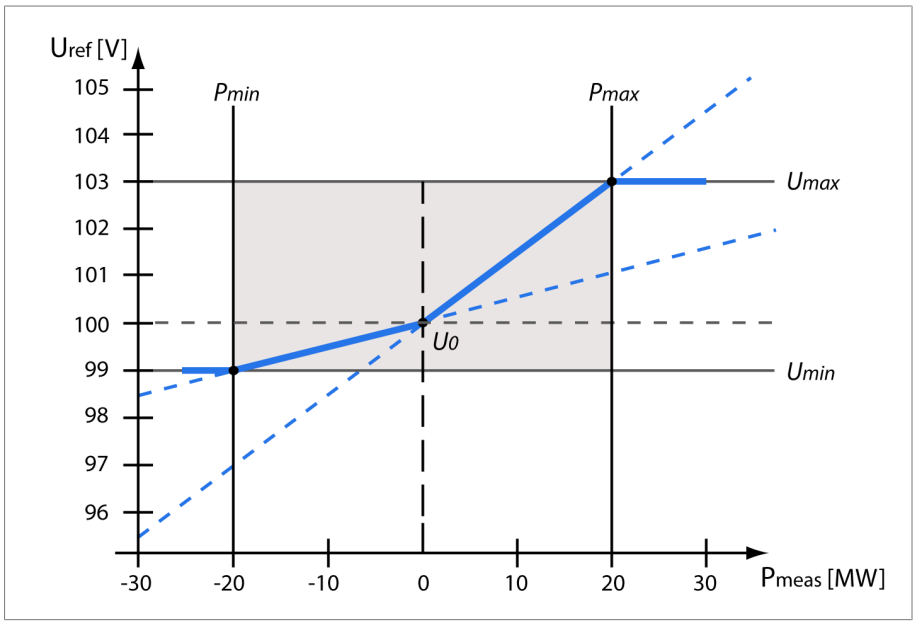

Figure 124: Active power-dependent adjustment of desired voltage value

U_{ref}	Desired value	U_{min}	Minimum desired value
P_{meas}	Measured active power	U_{max}	Maximum desired value
P_{min}	Active power at minimum desired value	U_0	Set desired value when measured active power = 0
P_{max}	Active power at maximum desired value		

Response to active power P_{max} being exceeded

If the measured active power P_{meas} exceeds the set parameter P_{max}, the value U_{max} is adopted as the desired value.

$$U_{ref} = U_{max}$$

Response to value falling below active power P_{min}

If the measured active power P_{meas} falls below the set parameter P_{min}, the value U_{min} is adopted as the desired value.

$$U_{ref} = U_{min}$$

Response to a measured active power P_{meas} = 0 MW:

If the measured active power $P_{meas} = 0$, the set parameter U_0 is adopted.

$$U_{ref} = U_0$$

Linear dependency with negative active power:

If the measured active power $P_{min} \leq P_{meas} \leq 0$, the desired value is calculated using the following equation:

$$U_{ref} = \frac{U_0 - U_{min}}{0 - P_{min}} \times P_{meas} + U_0$$

Linear dependency with positive active power:

If the measured active power $0 \leq P_{meas} \leq P_{max}$, the desired value is calculated using the following equation:

$$U_{ref} = \frac{U_{max} - U_0}{P_{max}} \times P_{meas} + U_0$$

To activate the active power-dependent adjustment of the desired voltage value, you need to set the following parameters:

Activating TDSC

The TDSC function is only active when the device can calculate the active power (correct current measurement and voltage measurement) and the required parameters are set. If this isn't done, the voltage is regulated to the set desired value [▶Section 9.15.1.1, Page 171]. You can activate or deactivate the power-dependent adjustment of the desired voltage value as follows:

- Parameter
- Digital inputs *TDSC on* and *TDSC off* (optional)
- Control system command (optional)

If you activate TDSC, the line drop compensation (R&X compensation or Z compensation) function is deactivated.

To activate/deactivate TDSC using parameters, proceed as follows:

1. Go to **Settings > Parameters > Control > Activate TDSC**.
2. Select the option you want.
3. Press the **Accept** button to save the modified parameter.

TDSC Umax/Umin

You can use these parameters to set the maximum and minimum desired value. The maximum or minimum desired value is activated when the measured active power reaches the set minimum or maximum active power.

1. Go to **Settings > Parameters > Control > TDSC Umax/Umin**.
2. Enter maximum/minimum desired value.
3. Press the **Accept** button to save the modified parameter.

TDSC U0

You can use this parameter to set the desired value which is to be used when the measured active power is 0.

1. Go to **Settings > Parameter > Control > TDSC U0**.
2. Enter desired value at active power 0.
3. Press the **Accept** button to save the modified parameter.

TDSC Pmax/Pmin

You can use these parameters to set the maximum and minimum active power value at which the maximum and minimum active power-dependent desired value is to be used for regulation.

1. Go to **Settings > Parameters > Control > TDSC Pmax/Pmin**.
2. Enter active power for maximum/minimum desired value.
3. Press the **Accept** button to save the modified parameter.

9.15.1.7 Active power-dependent adjustment of desired voltage value with 3 different desired values

The TAPCON® Dynamic Setpoint Control (TDSC) function is used to adapt the desired voltage value depending on the measured active power. This allows you to compensate for a voltage drop during increased load or an increase in voltage due to a decentralized feed-in.

The device provides you with 3 different sets of parameters for this purpose. Depending on the selection of the desired value 1, 2 or 3, the device uses the parameter set 1, 2 or 3 for TDSC.

Depending on whether positive or negative active power is measured, the desired value calculation is based on 2 linear equations (see example in diagram below).

Parameter	Function	Settings (see diagram below)
U_{max}: Maximum desired value	Maximum set desired value is activated when P_{max} is exceeded.	103.0 V
U_{min}: Minimum desired value	Minimum set desired value is activated when value falls below P_{min}.	99.0 V
U_0: Desired value at 0 active power	Set desired value is activated when measured active power is 0 MW.	100.00 V
P_{max}: Active power at max. desired value	Set maximum active power value above which the power-dependent desired value is to attain the maximum value U_{max}.	20.0 MW
P_{min}: Active power at min. desired value	Set minimum active power value below which the power-dependent desired value is to attain the minimum value U_{min}.	-20.0 MW

Table 44: Parameters to be set for active power-dependent adjustment of desired voltage value

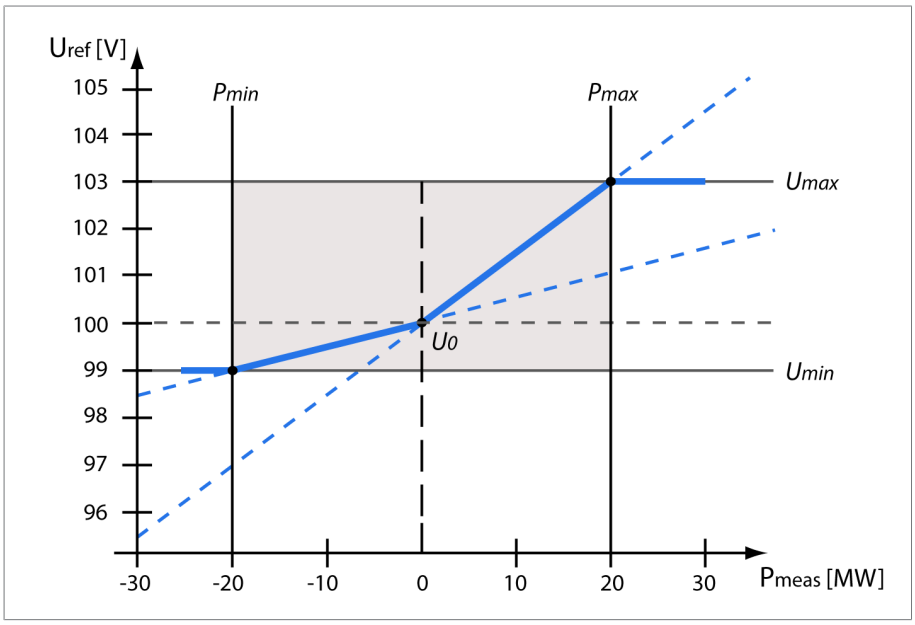

Figure 125: Active power-dependent adjustment of desired voltage value

U_{ref}	Desired value	U_{min}	Minimum desired value
P_{meas}	Measured active power	U_{max}	Maximum desired value
P_{min}	Active power at minimum desired value	U_0	Set desired value when measured active power = 0
P_{max}	Active power at maximum desired value		

Response to active power P_{max} being exceeded

If the measured active power P_{meas} exceeds the set parameter P_{max}, the value U_{max} is adopted as the desired value.

$$U_{ref} = U_{max}$$

Response to value falling below active power P_{min}

If the measured active power P_{meas} falls below the set parameter P_{min}, the value U_{min} is adopted as the desired value.

$$U_{ref} = U_{min}$$

Response to a measured active power P_{meas} = 0 MW:

If the measured active power P_{meas} = 0, the set parameter U_0 is adopted.

$$U_{ref} = U_0$$

Linear dependency with negative active power:

If the measured active power $P_{min} \leq P_{meas} \leq 0$, the desired value is calculated using the following equation:

$$U_{ref} = \frac{U_0 - U_{min}}{0 - P_{min}} \times P_{meas} + U_0$$

Linear dependency with positive active power:

If the measured active power $0 \leq P_{meas} \leq P_{max}$, the desired value is calculated using the following equation:

$$U_{ref} = \frac{U_{max} - U_0}{P_{max}} \times P_{meas} + U_0$$

To activate the active power-dependent adjustment of the desired voltage value, you need to set the following parameters:

Activating TDSC

The TDSC function is only active when the device can calculate the active power (correct current measurement and voltage measurement) and the required parameters are set. If this isn't done, the voltage is regulated to the set desired value 1/2/3 [▶Section 9.15.1.2, Page 171]. You can activate or deactivate the power-dependent adjustment of the desired voltage value as follows:

- Parameter
- Digital inputs *TDSC on* and *TDSC off* (optional)
- Control system command (optional)

If you activate TDSC, the line drop compensation (R&X compensation or Z compensation) function is deactivated.

To activate/deactivate TDSC using parameters, proceed as follows:

1. Go to **Settings > Parameters > Control > Activate TDSC**.
2. Select the option you want.
3. Press the **Accept** button to save the modified parameter.

TDSC 1/2/3 Umax/Umin

You can use these parameters to set the maximum and minimum desired value. The maximum or minimum desired value is activated when the measured active power reaches the set minimum or maximum active power.

1. Go to **Settings > Parameters > Control > TDSC Umax/Umin**.
2. Enter maximum/minimum desired value.
3. Press the **Accept** button to save the modified parameter.

TDSC 1/2/3 U0

You can use this parameter to set the desired value which is to be used when the measured active power is 0.

1. Go to **Settings > Parameter > Control > TDSC U0**.
2. Enter desired value at active power 0.
3. Press the **Accept** button to save the modified parameter.

TDSC 1/2/3 Pmax/Pmin

You can use these parameters to set the maximum and minimum active power value at which the maximum and minimum active power-dependent desired value is to be used for regulation.

1. Go to **Settings > Parameters > Control > TDSC Pmax/Pmin**.
2. Enter active power for maximum/minimum desired value.
3. Press the **Accept** button to save the modified parameter.

9.15.1.8 Desired value setting via BCD

With the desired value setting via BCD, you can variably adjust the desired value for the automatic voltage regulation via digital inputs by means of BCD coding.

Depending on variant, desired value setting via BCD is always active or you can activate it by creating a signal at the *BCD desired value* input.

The following outputs are available to you as an option:

- *Desired value setting faulty*: The device issues a signal if the BCD code for the desired value setting is invalid.
- *Desired value active*: The device issues a signal if desired value setting via BCD is active.

The permissible setting range is 49...140 V. The specified value is written to the parameter desired value 1. If the BCD coding is invalid or desired value setting via BCD is deactivated, the device uses the value set in parameter desired value 1.

Desired value	BCD input								
	100	80	40	20	10	8	4	2	1
49 V	0	0	1	0	0	1	0	0	1
50 V	0	0	1	0	1	0	0	0	0
51 V	0	0	1	0	1	0	0	0	1
52 V	0	0	1	0	1	0	0	1	0
53 V	0	0	1	0	1	0	0	1	1
54 V	0	0	1	0	1	0	1	0	0
55 V	0	0	1	0	1	0	1	0	1
56 V	0	0	1	0	1	0	1	1	0
57 V	0	0	1	0	1	0	1	1	1
58 V	0	0	1	0	1	1	0	0	0
59 V	0	0	1	0	1	1	0	0	1
60 V	0	0	1	1	0	0	0	0	0
61 V	0	0	1	1	0	0	0	0	1
62 V	0	0	1	1	0	0	0	1	0
63 V	0	0	1	1	0	0	0	1	1
64 V	0	0	1	1	0	0	1	0	0
65 V	0	0	1	1	0	0	1	0	1
66 V	0	0	1	1	0	0	1	1	0
67 V	0	0	1	1	0	0	1	1	1
68 V	0	0	1	1	0	1	0	0	0
69 V	0	0	1	1	0	1	0	0	1
70 V	0	0	1	1	1	0	0	0	0
71 V	0	0	1	1	1	0	0	0	1
72 V	0	0	1	1	1	0	0	1	0
73 V	0	0	1	1	1	0	0	1	1
74 V	0	0	1	1	1	0	1	0	0
75 V	0	0	1	1	1	0	1	0	1

Desired value	BCD input								
	100	80	40	20	10	8	4	2	1
76 V	0	0	1	1	1	0	1	1	0
77 V	0	0	1	1	1	0	1	1	1
78 V	0	0	1	1	1	1	0	0	0
79 V	0	0	1	1	1	1	0	0	1
80 V	0	1	0	0	0	0	0	0	0
81 V	0	1	0	0	0	0	0	0	1
82 V	0	1	0	0	0	0	0	1	0
83 V	0	1	0	0	0	0	0	1	1
84 V	0	1	0	0	0	0	1	0	0
85 V	0	1	0	0	0	0	1	0	1
86 V	0	1	0	0	0	0	1	1	0
87 V	0	1	0	0	0	0	1	1	1
88 V	0	1	0	0	0	1	0	0	0
89 V	0	1	0	0	0	1	0	0	1
90 V	0	1	0	0	1	0	0	0	0
91 V	0	1	0	0	1	0	0	0	1
92 V	0	1	0	0	1	0	0	1	0
93 V	0	1	0	0	1	0	0	1	1
94 V	0	1	0	0	1	0	1	0	0
95 V	0	1	0	0	1	0	1	0	1
96 V	0	1	0	0	1	0	1	1	0
97 V	0	1	0	0	1	0	1	1	1
98 V	0	1	0	0	1	1	0	0	0
99 V	0	1	0	0	1	1	0	0	1
100 V	1	0	0	0	0	0	0	0	0
101 V	1	0	0	0	0	0	0	0	1
102 V	1	0	0	0	0	0	0	1	0
103 V	1	0	0	0	0	0	0	1	1
104 V	1	0	0	0	0	0	1	0	0
105 V	1	0	0	0	0	0	1	0	1
106 V	1	0	0	0	0	0	1	1	0
107 V	1	0	0	0	0	0	1	1	1
108 V	1	0	0	0	0	1	0	0	0
109 V	1	0	0	0	0	1	0	0	1
110 V	1	0	0	0	1	0	0	0	0

Desired value	BCD input								
	100	80	40	20	10	8	4	2	1
111 V	1	0	0	0	1	0	0	0	1
112 V	1	0	0	0	1	0	0	1	0
113 V	1	0	0	0	1	0	0	1	1
114 V	1	0	0	0	1	0	1	0	0
115 V	1	0	0	0	1	0	1	0	1
116 V	1	0	0	0	1	0	1	1	0
117 V	1	0	0	0	1	0	1	1	1
118 V	1	0	0	0	1	1	0	0	0
119 V	1	0	0	0	1	1	0	0	1
120 V	1	0	0	1	0	0	0	0	0
121 V	1	0	0	1	0	0	0	0	1
122 V	1	0	0	1	0	0	0	1	0
123 V	1	0	0	1	0	0	0	1	1
124 V	1	0	0	1	0	0	1	0	0
125 V	1	0	0	1	0	0	1	0	1
126 V	1	0	0	1	0	0	1	1	0
127 V	1	0	0	1	0	0	1	1	1
128 V	1	0	0	1	0	1	0	0	0
129 V	1	0	0	1	0	1	0	0	1
130 V	1	0	0	1	1	0	0	0	0
131 V	1	0	0	1	1	0	0	0	1
132 V	1	0	0	1	1	0	0	1	0
133 V	1	0	0	1	1	0	0	1	1
134 V	1	0	0	1	1	0	1	0	0
135 V	1	0	0	1	1	0	1	0	1
136 V	1	0	0	1	1	0	1	1	0
137 V	1	0	0	1	1	0	1	1	1
138 V	1	0	0	1	1	1	0	0	0
139 V	1	0	0	1	1	1	0	0	1
140 V	1	0	1	0	0	0	0	0	0

Table 45: BCD-coded desired value

Setting desired value 1

1. Go to **Settings > Parameters > Grid > Control > Desired value**.
2. Enter the desired value.
3. Press the **Accept** button to save the modified parameter.

Bandwidth

You can use this parameter to set the maximum permissible deviation of the measured voltage U_{actual} from the desired value $U_{desired}$.

In order to set the correct value, the transformer step voltage and nominal voltage must be known. Note that a large bandwidth will result in a large control deviation.

The bandwidth must always be greater than the following value:

$$|\pm B| \geq 0{,}6 \times \frac{U_{n-1} - U_n}{U_N} \times 100\,\%$$

U_{n-1}	Step voltage of tap position n-1
U_n	Step voltage of tap position n
U_N	Nominal voltage

The following transformer values are used to determine the minimum bandwidth:

Nominal voltage U_N = 11000 V

Step voltage in tap position 4 U_{Step4} = 11275 V

Step voltage in tap position 5 U_{Step5} = 11000 V

$$[\pm B\%] \geq 0{,}6 \cdot \frac{U_{Step4} - U_{Step5}}{U_{nom}} \cdot 100\%$$

$$[\pm B\%] \geq 0{,}6 \cdot \frac{11275\,V - 11000\,V}{11000\,V} \cdot 100\%$$

$$[\pm B\%] \geq 1{,}5\%$$

Delay time T1

Delay time T1 delays the issuing of a tap-change command for a defined period. This prevents unnecessary tap-change operations if the tolerance bandwidth is exited briefly.

Response to delay time T1

If the control variable **5** is within the set bandwidth **6**, no control commands are issued to the motor drive unit for the tap change. Control commands will also not be issued to the motor-drive unit if the control variable returns to the bandwidth **4** within the set delay time T1 **6**. However, if the control variable deviates from the set bandwidth for a long period **C**, a tap-

change command D is issued after expiration of the set delay time T1. The on-load tap-changer carries out a tap-change in a raise or lower direction to return to the tolerance bandwidth.

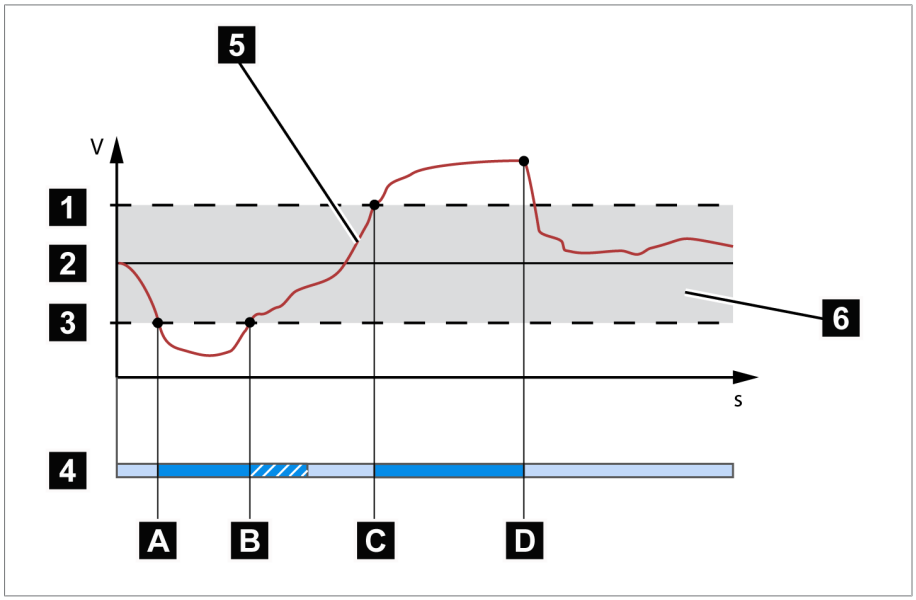

Figure 126: Behavior of the control function with delay time T1

1	Upper limit of bandwidth	4	Set delay time T1
2	Desired value	5	Control variable measured value
3	Lower limit of bandwidth	6	Bandwidth range
A	Control variable is outside of the bandwidth. Delay time T1 starts.	B	Control variable returned to within the bandwidth before delay time T1 has expired.
C	Control variable is outside of the bandwidth. Delay time T1 starts.	D	Control variable is still outside the bandwidth after delay time T1 has expired. Tap-change operation is initiated.

Time response T1

You can use this parameter to set the time response for delay time T1. You can select the following options:

- Linear time response
- Integral time response

Linear time response With linear time response, the device responds with a constant delay time regardless of the control deviation.

Integral time response With integral time response, the device responds with a variable delay time depending on the control deviation. The greater the control deviation (ΔU) in relation to the set bandwidth (B), the shorter the delay time. This means that

the device responds faster to large voltage changes in the grid. Regulation accuracy improves as a result but the frequency of tap-changes increases too.

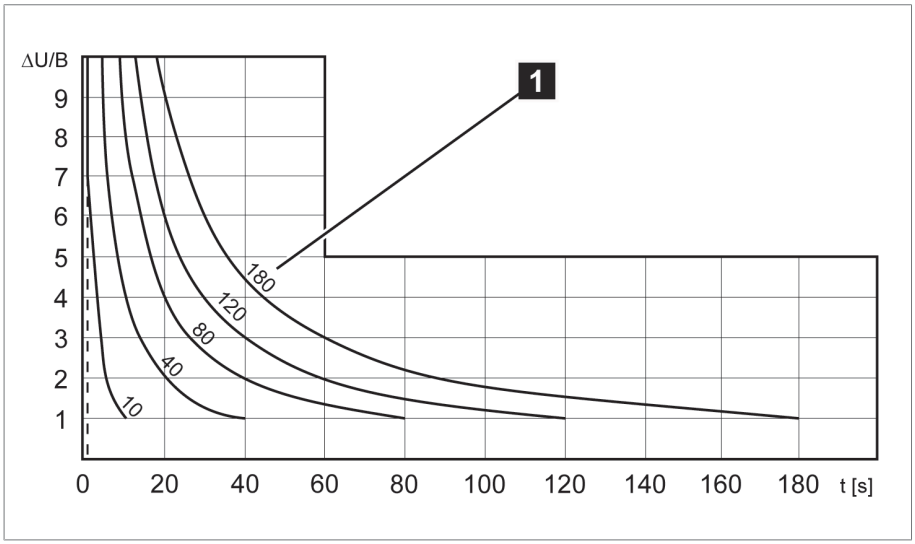

Figure 127: Diagram for integral time response

ΔU/B	Control deviation "ΔU" as % of desired value in relation to the set bandwidth "B" as % of desired value
1	"Delay time T1" parameter

Delay time T2

You can use this parameter to set delay time T2. Delay time T2 is used to compensate for large control deviations faster.

The delay time T2 only takes effect if more than one tap-change operation is required to correct the control deviation. The first output pulse occurs after the set delay time T1. After the set tap-change delay time T2 has elapsed, additional pulses occur in order to correct the existing control deviation.

The following requirements must be noted to set delay time T2:

- The delay time T2 must be greater than the switching pulse time.
- The delay time T2 must be greater than the maximum operating time of the motor-drive unit.
- The delay time T2 must be less than the value set for delay time T1.

Behavior with delay times T1 and T2

If the control variable **5** deviates from the set bandwidth for a long period **A**, a control impulse is output to the motor-drive unit after the set delay time T1 **B**. If the control variable is still outside the bandwidth, delay time T2 **B**

starts to count down. Once delay time T2 is complete, a control impulse is again issued to the motor-drive unit for the tap change C to return to the tolerance bandwidth.

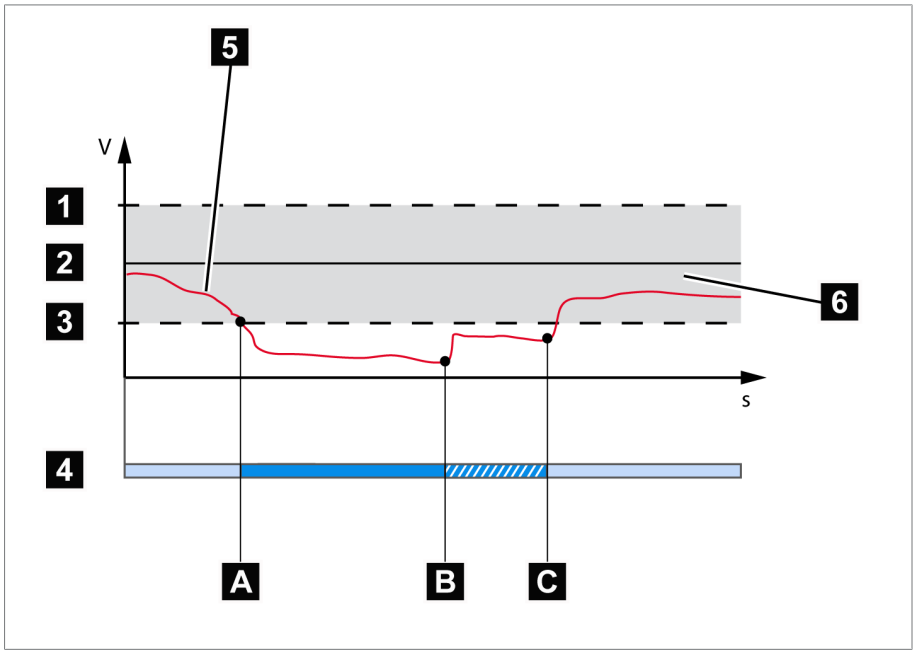

Figure 128: Behavior of the regulation function with delay times T1 and T2

1	Upper limit of bandwidth	4	Set delay times T1 and T2.
2	Desired value	5	Control variable measured value
3	Lower limit of bandwidth	6	Bandwidth range
A	Control variable is outside of the bandwidth. Delay time T1 starts.	B	Delay time T1 complete. Tap change triggered.
C	Delay time T2 complete. Tap change triggered.		

Activate delay time T2

You can use this parameter to activate or deactivate the delay time T2.

9.16 Reactive power regulation (optional)

All of the parameters required for reactive power regulation are described in this section.

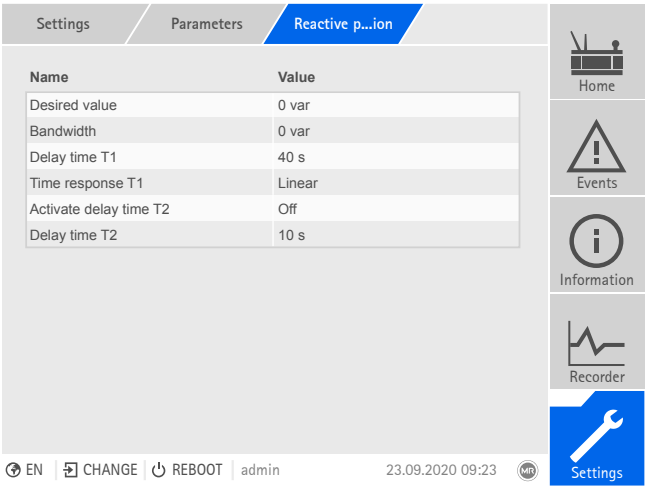

Figure 129: Reactive power regulation

1. Go to **Settings > Parameters > On-load tap-changer regulator > Reactive power regulation**.
2. Select the desired parameter.
3. Set the desired parameter.
4. Press the **Accept** button to save the modified parameter.

Desired value

You can use this parameter to set the desired value for the reactive power regulation.

Bandwidth

You can use this parameter to set the maximum permissible deviation of the reactive power from the desired value.

Delay time T1

Delay time T1 delays the issuing of a tap-change command for a defined period. This prevents unnecessary tap-change operations if the tolerance bandwidth is exited briefly.

Response to delay time T1

If the control variable **5** is within the set bandwidth **6**, no control commands are issued to the motor drive unit for the tap change. Control commands will also not be issued to the motor-drive unit if the control variable returns to the bandwidth **4** within the set delay time T1 **6**. However, if the control variable deviates from the set bandwidth for a long period **C**, a tap-

change command D is issued after expiration of the set delay time T1. The on-load tap-changer carries out a tap-change in a raise or lower direction to return to the tolerance bandwidth.

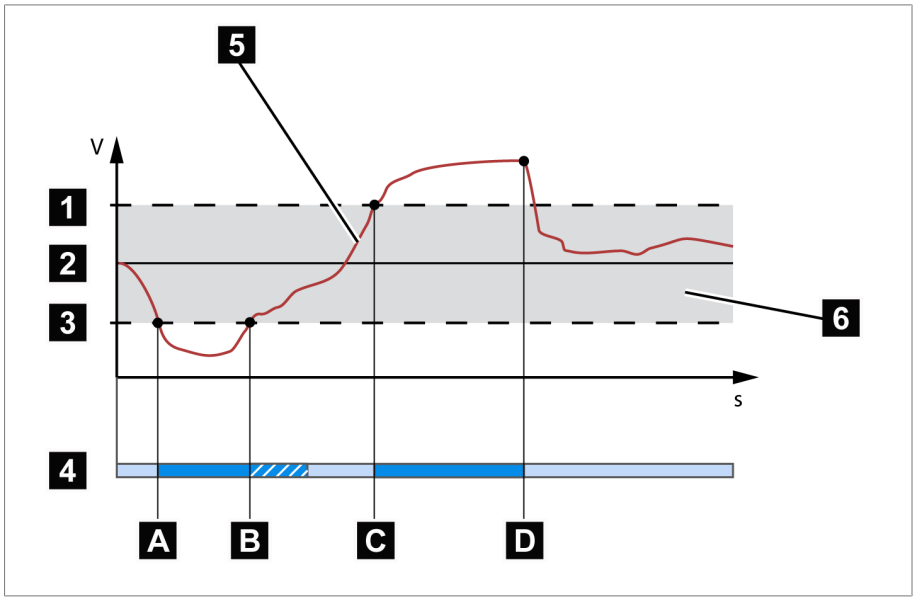

Figure 130: Behavior of the control function with delay time T1

1	Upper limit of bandwidth	4	Set delay time T1
2	Desired value	5	Control variable measured value
3	Lower limit of bandwidth	6	Bandwidth range
A	Control variable is outside of the bandwidth. Delay time T1 starts.	B	Control variable returned to within the bandwidth before delay time T1 has expired.
C	Control variable is outside of the bandwidth. Delay time T1 starts.	D	Control variable is still outside the bandwidth after delay time T1 has expired. Tap-change operation is initiated.

Time response T1

You can use this parameter to set the time response for delay time T1. You can select the following options:

- Linear time response
- Integral time response

Linear time response With linear time response, the device responds with a constant delay time regardless of the control deviation.

Integral time response With integral time response, the device responds with a variable delay time depending on the control deviation. The greater the control deviation (ΔU) in relation to the set bandwidth (B), the shorter the delay time. This means that

the device responds faster to large voltage changes in the grid. Regulation accuracy improves as a result but the frequency of tap-changes increases too.

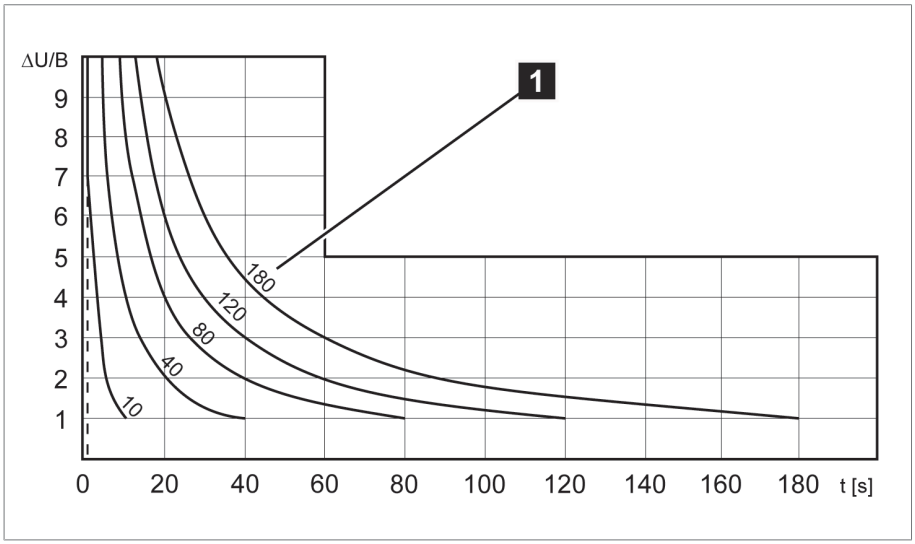

Figure 131: Diagram for integral time response

ΔU/B	Control deviation "ΔU" as % of desired value in relation to the set bandwidth "B" as % of desired value
1	"Delay time T1" parameter

Delay time T2

You can use this parameter to set delay time T2. Delay time T2 is used to compensate for large control deviations faster.

The delay time T2 only takes effect if more than one tap-change operation is required to correct the control deviation. The first output pulse occurs after the set delay time T1. After the set tap-change delay time T2 has elapsed, additional pulses occur in order to correct the existing control deviation.

The following requirements must be noted to set delay time T2:

- The delay time T2 must be greater than the switching pulse time.
- The delay time T2 must be greater than the maximum operating time of the motor-drive unit.
- The delay time T2 must be less than the value set for delay time T1.

Behavior with delay times T1 and T2

If the control variable **5** deviates from the set bandwidth for a long period **A**, a control impulse is output to the motor-drive unit after the set delay time T1 **B**. If the control variable is still outside the bandwidth, delay time T2 **B**

starts to count down. Once delay time T2 is complete, a control impulse is again issued to the motor-drive unit for the tap change C to return to the tolerance bandwidth.

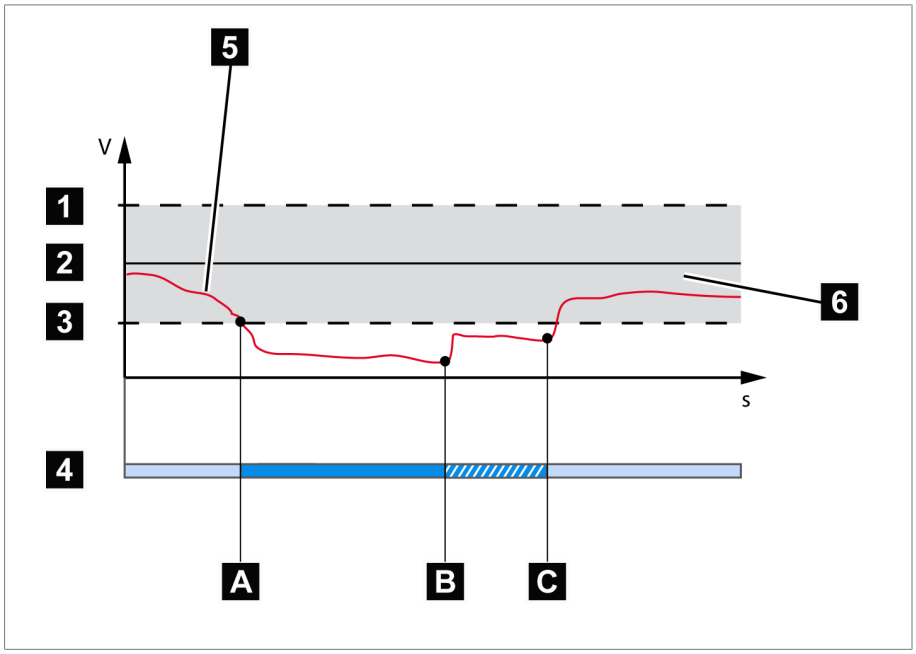

Figure 132: Behavior of the regulation function with delay times T1 and T2

1	Upper limit of bandwidth	4	Set delay times T1 and T2.
2	Desired value	5	Control variable measured value
3	Lower limit of bandwidth	6	Bandwidth range
A	Control variable is outside of the bandwidth. Delay time T1 starts.	B	Delay time T1 complete. Tap change triggered.
C	Delay time T2 complete. Tap change triggered.		

Activate delay time T2

You can use this parameter to activate or deactivate the delay time T2.

9.17 Transformer data

The transformation ratios and measuring set-up for the voltage and current transformers used in the system can be set with the following parameters. The device uses this information to calculate the corresponding measured values on the primary side of the current transformer (and therefore the transformer) from the recorded measured values. These are then displayed.

9.17.1 Setting transformer data

You can use the following parameters to set the transformer data. Also note the Examples for standard circuits for current transformers and voltage transformers [▶ Section 9.17.2, Page 194].

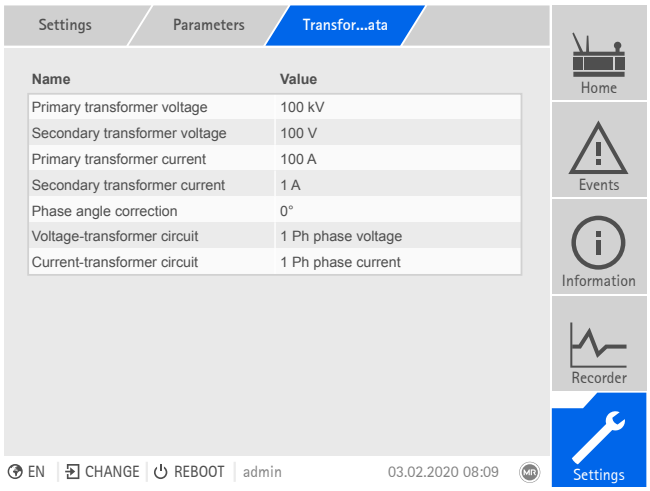

Figure 133: Transformer data

1. Go to **Settings > Parameters > Grid > Transformer data**.
2. Select the desired parameter.
3. Set the desired parameter.
4. Press the **Accept** button to save the modified parameter.

Primary transformer voltage

You can use this parameter to set the primary voltage of the voltage transformer in kV.

Secondary transformer voltage

You can use this parameter to set the secondary voltage of the voltage transformer in kV.

Primary transformer current

You can use this parameter to set the primary current of the current transformer.

If you use the optional function "Hot-spot calculation on 3 different windings (W1, W2, W3)", you must set the parameter for W1, W2 and W3 respectively.

Secondary transformer current

You can use this parameter to set the secondary current of the current transformer. You can select the following options:

- 0.2 A
- 1 A
- 5 A

If you use the optional function "Hot-spot calculation on 3 different windings (W1, W2, W3)", this parameter setting applies to all 3 windings.

Measurement mode

If you are measuring the voltage and current with the 3-phase measuring module, you can use this parameter to set whether you have connected the voltage transformer between two phases or between a phase and neutral.

Phase angle correction

You can use this parameter to set the phase angle correction for your transformer circuit.

Voltage-transformer circuit

You can use this parameter to set your voltage transformer's circuit. You can select the following options:

Option	Description
1 Ph phase voltage	Measurement in 1-phase grid between the conductor and neutral conductor.
3 Ph differential voltage	Measurement in 3-phase grid between 2 conductors
3 Ph phase voltage	Measurement in 3-phase grid between the conductor and neutral conductor

Table 46: Voltage-transformer circuit

Current-transformer circuit

You can use this parameter to set the circuit for your current transformer. You can select the following options:

Option	Description
1 Ph phase current	Measurement of phase current in 1-phase grid.
3 Ph total current	Measurement of differential current in 3-phase grid.
3 Ph phase current	Measurement of phase current in 3-phase grid.

Table 47: Current-transformer circuit

9.17.2 Circuit examples for voltage transformers and current transformers

Below you will find different examples of circuits for voltage transformers and current transformers and the corresponding settings.

9.17.2.1 1-phase measurement

Circuit 1-A

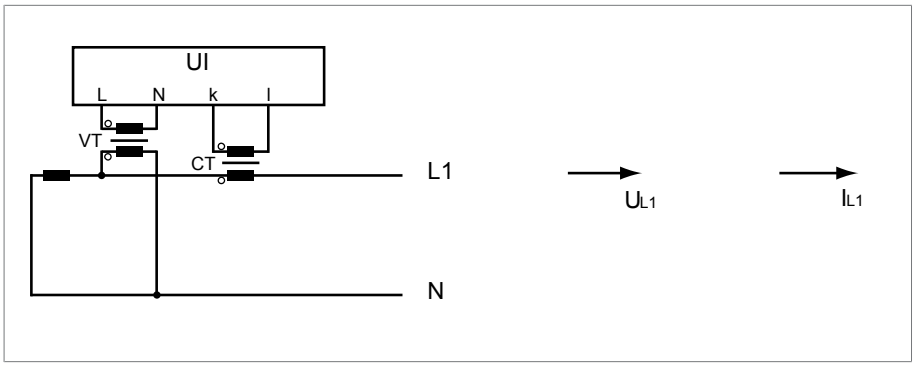

- The voltage transformer VT is connected to the phase conductor and neutral conductor.
- The current transformer CT is looped into the phase conductor.
- The voltage U_{L1} and current I_{L1} are in phase.
- The voltage drop on a phase conductor is determined by the current I_{L1}.

If you use this circuit, set the device as follows:

Parameters	Option
Voltage-transformer circuit	1 Ph phase voltage
Current-transformer circuit	1 Ph phase current
Phase angle correction	0°

Table 48: Circuit 1-A

Circuit 1-B

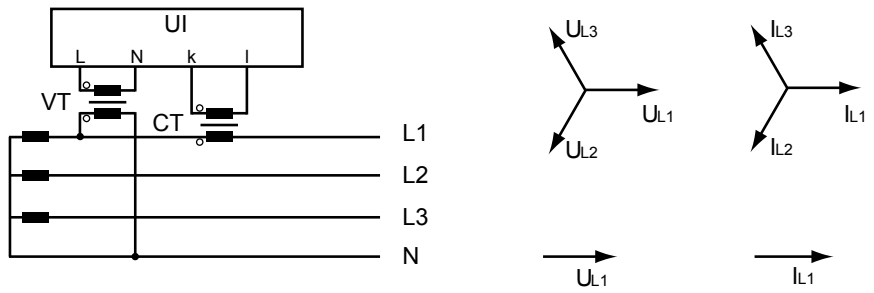

- The voltage transformer VT is connected to the phase conductor L1 and the neutral conductor.
- The current transformer CT is looped into the phase conductor L1.
- The voltage U and current I are in phase.
- The voltage drop on a phase conductor is determined by the current I_{L1}.

If you use this circuit, set the device as follows:

Parameters	Option
Voltage-transformer circuit	3 Ph phase voltage
Current-transformer circuit	3 Ph phase current
Phase angle correction	0°

Table 49: Circuit 1-B

Circuit 1-C

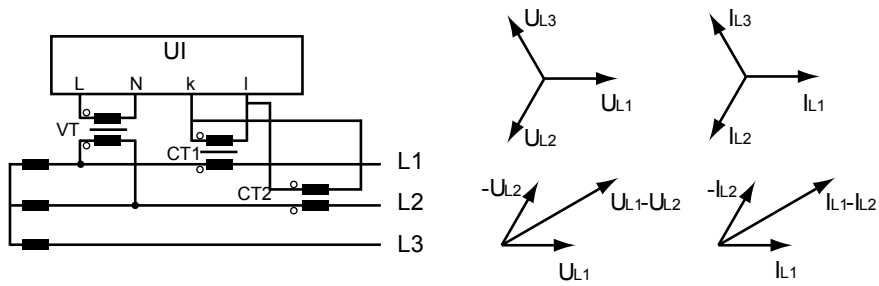

- The voltage transformer VT is connected to the phase conductors L1 and L2.
- The current transformer CT1 is looped into the phase conductor L1 and CT2 into the phase conductor L2.
- The current transformers CT1 and CT2 are connected crosswise in parallel (total current = $I_{L1} + I_{L2}$).

- The total current $I_{L1} + I_{L2}$ and voltage U_{L1}-U_{L2} are in phase.
- The voltage drop on a phase conductor is determined by the current: $(I_{L1} + I_{L2}) / \sqrt{3}$.

If you use this circuit, set the device as follows:

Parameters	Option
Voltage-transformer circuit	3 Ph differential voltage
Current-transformer circuit	3 Ph total current
Phase angle correction	0°

Table 50: Circuit 1-C

Circuit 1-D

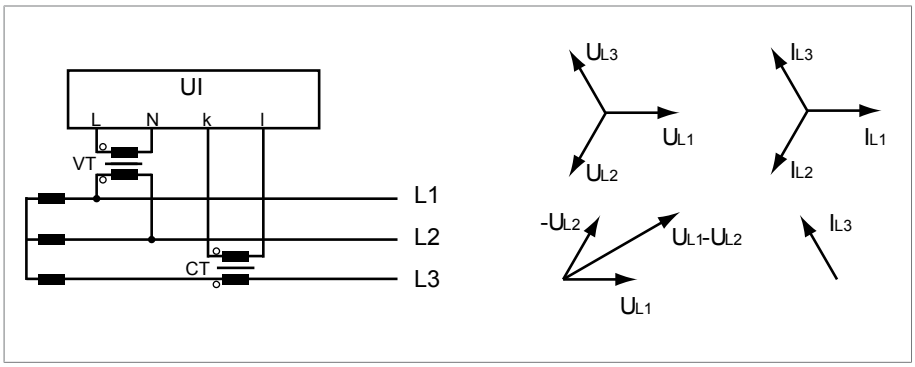

- The voltage transformer VT is connected to the phase conductors L1 and L2.
- The current transformer CT is looped into the phase conductor L3.
- The current I_{L3} is ahead of voltage U_{L1}-V_{L2} by 90°. This corresponds to a phase shift of -90°.
- The voltage drop on a phase conductor is determined by the current I_{L3}.

If you use this circuit, set the device as follows:

Parameters	Option
Voltage-transformer circuit	3 Ph differential voltage
Current-transformer circuit	3 Ph phase current
Phase angle correction	90°

Table 51: Circuit 1-D

Circuit 1-E

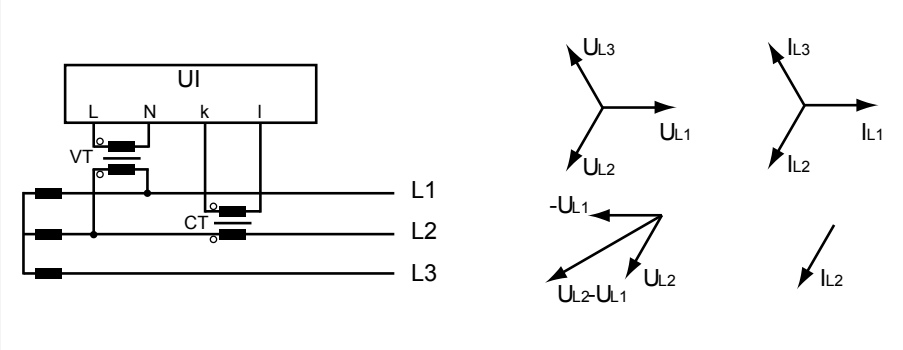

- The voltage transformer VT is connected to the phase conductors L1 and L2.
- The current transformer CT is looped into the phase conductor L2.
- The current I_{L2} is ahead of voltage U_{L2}-U_{L1} by 30°. This corresponds to a phase shift of -30°.
- The voltage drop on a phase conductor is determined by the current I_{L2}.

If you use this circuit, set the device as follows:

Parameters	Option
Voltage-transformer circuit	3 Ph differential voltage
Current-transformer circuit	3 Ph phase current
Phase angle correction	30°

Table 52: Circuit 1-E

Circuit 1-F

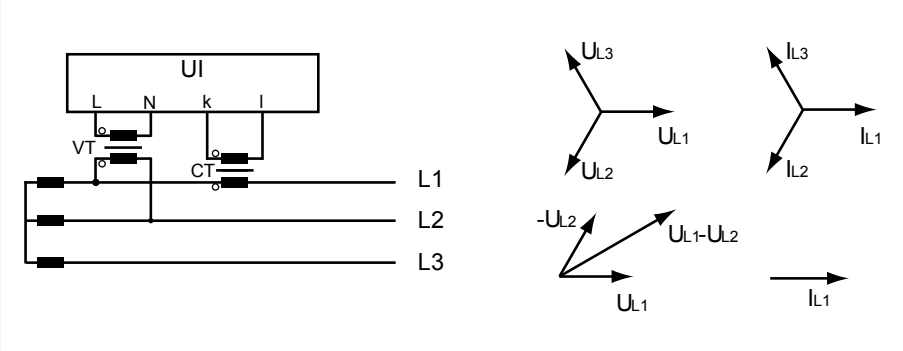

- The voltage transformer VT is connected to the phase conductors L1 and L2.
- The current transformer CT is looped into the phase conductor L1.
- The current I_{L1} lags behind voltage U_{L1}-U_{L2} by 30°. This corresponds to a phase shift of +30° and a correction value of -30°.
- The voltage drop on a phase conductor is determined by the current I_{L1}.

If you use this circuit, set the device as follows:

Parameters	Option
Voltage-transformer circuit	3 Ph differential voltage
Current-transformer circuit	3 Ph phase current
Phase angle correction	-30°

Table 53: Circuit 1-F

9.17.2.2 3-phase measurement

Circuit 3-A

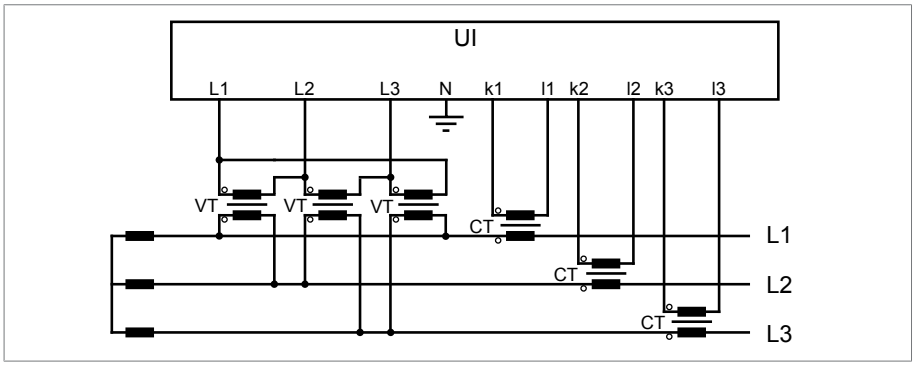

- Three-phase measurement.
- The voltage transformers are connected between the phases.
- The current lags behind the voltage by 30°.

If you use this circuit, set the device as follows:

Parameters	Option
Voltage-transformer circuit	-
Current-transformer circuit	-
Phase angle correction	0°
UI measuring channels	3-phase measurement (channels 1, 2, 3)
Measurement mode	Phase-phase

Table 54: Circuit 3-A

Circuit 3-B

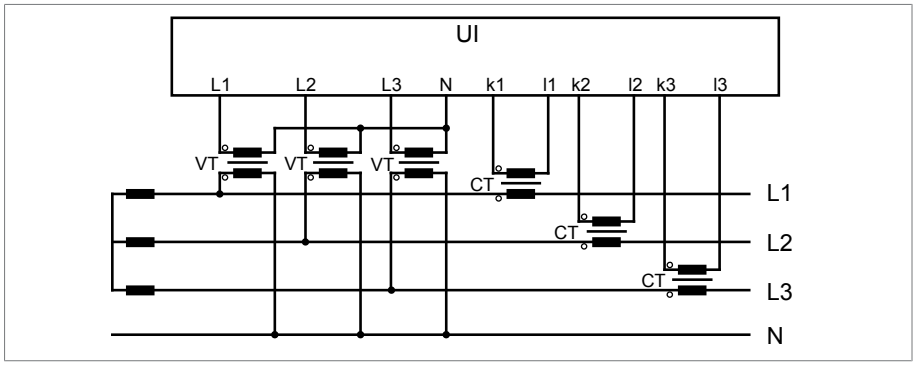

- Three-phase measurement.
- The voltage transformers are connected between the phase and neutral conductor.

Parameters	Option
Voltage-transformer circuit	-
Current-transformer circuit	-
Phase angle correction	0°
UI measuring channels	3-phase measurement (channels 1, 2, 3)
Measurement mode	Phase-neutral

Table 55: Circuit 3-B

Only use the circuits 3-C, 3-D and 3-E on symmetrical grids. Otherwise the device will calculate incorrect performance values.

Circuit 3-C

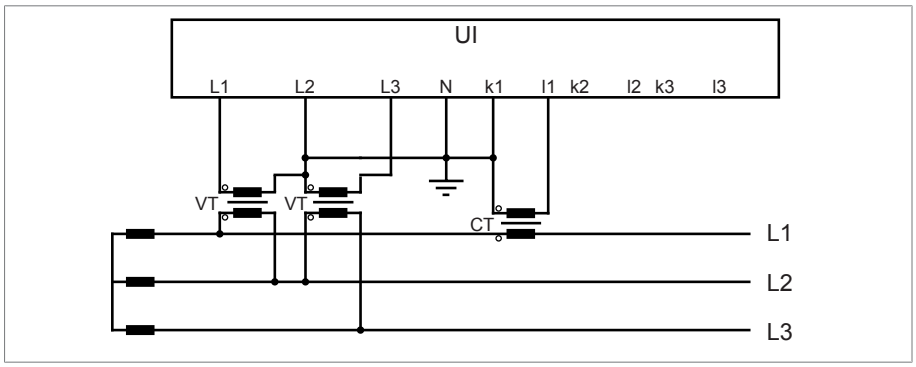

- Three-phase voltage measurement, single-phase current measurement.
- The voltage transformers are connected between the phases.
- The current transformer is connected to phase L1.

If you use this circuit, set the device as follows:

Parameters	Option
Voltage-transformer circuit	-
Current-transformer circuit	-
Phase angle correction	-30°
UI measuring channels	3-ph. voltage, 1-ph. current
Measurement mode	Phase-phase

Table 56: Circuit 3-C

Circuit 3-D

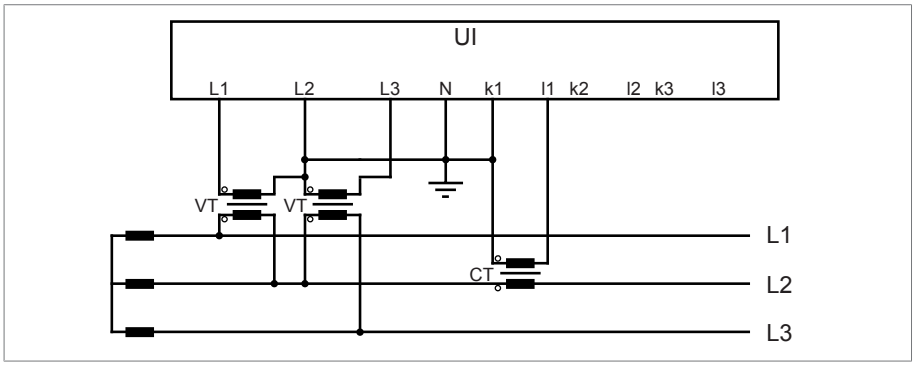

- Three-phase voltage measurement, single-phase current measurement.
- The voltage transformers are connected between the phases.
- The current transformer is connected to phase L2.

Parameters	Option
Voltage-transformer circuit	-
Current-transformer circuit	-
Phase angle correction	-150°
UI measuring channels	3-ph. voltage, 1-ph. current
Measurement mode	Phase-phase

Table 57: Circuit 3-D

Circuit 3-E

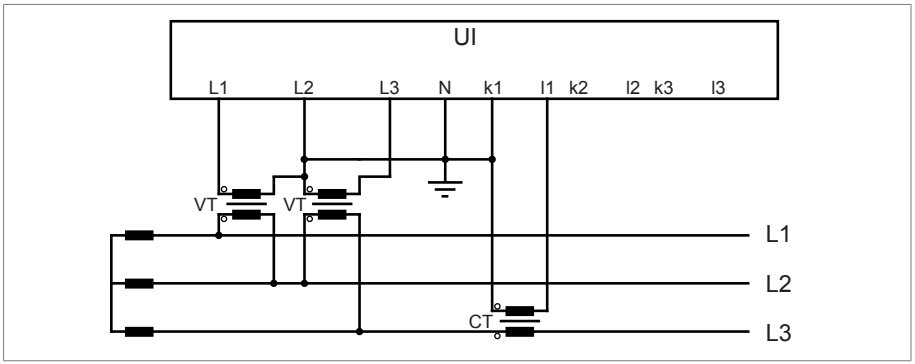

- Three-phase voltage measurement, single-phase current measurement.
- The voltage transformers are connected between the phases.
- The current transformer is connected to phase L3.

Parameters	Option
Voltage-transformer circuit	-
Current-transformer circuit	-
Phase angle correction	90°
UI measuring channels	3-ph. voltage, 1-ph. current
Measurement mode	Phase-phase

Table 58: Circuit 3-E

Circuit 3-F

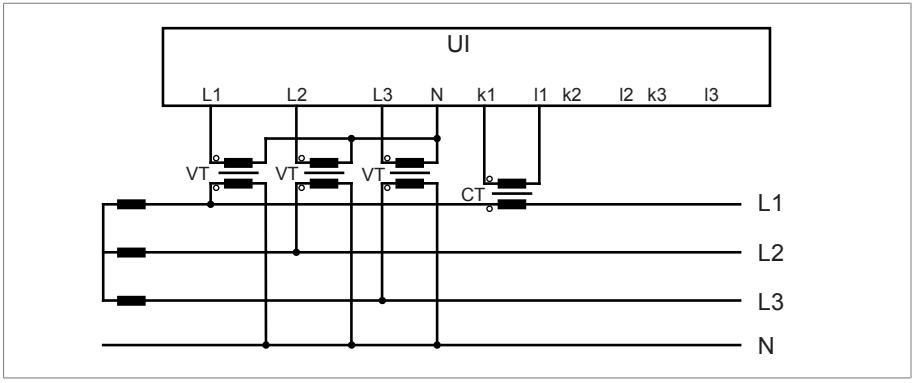

- Three-phase voltage measurement, single-phase current measurement.
- The voltage transformers are connected between the phase and neutral conductor.
- The current transformer is connected to phase L1.

Parameters	Option
Voltage-transformer circuit	3 Ph phase voltage
Current-transformer circuit	3 Ph phase current
Phase angle correction	0°
UI measuring channels	3-ph. voltage, 1-ph. current
Measurement mode	Phase-neutral

Table 59: Circuit 3-F

Circuit 3-G

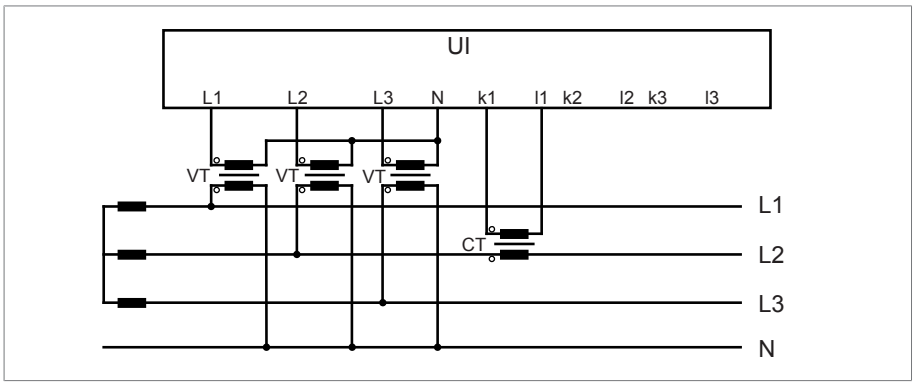

- Three-phase voltage measurement, single-phase current measurement.
- The voltage transformers are connected between the phase and neutral conductor.
- The current transformer is connected to phase L2.

Parameters	Option
Voltage-transformer circuit	3 Ph phase voltage
Current-transformer circuit	3 Ph phase current
Phase angle correction	-120°
UI measuring channels	3-ph. voltage, 1-ph. current
Measurement mode	Phase-neutral

Table 60: Circuit 3-G

Circuit 3-H

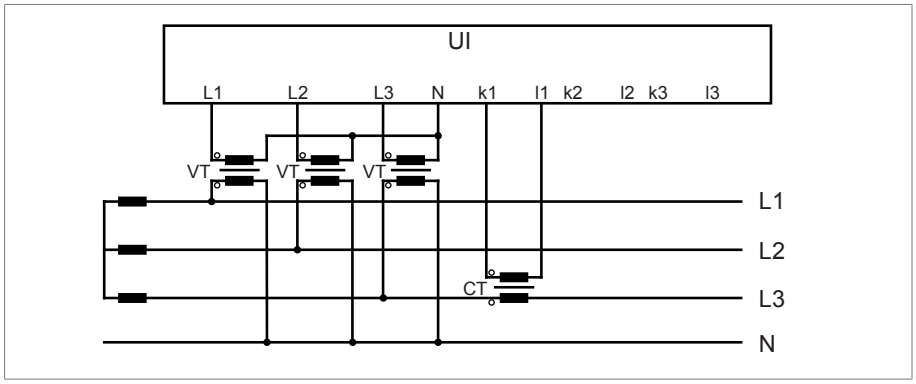

- Three-phase voltage measurement, single-phase current measurement.
- The voltage transformers are connected between the phase and neutral conductor.
- The current transformer is connected to phase L3.

Parameters	Option
Voltage-transformer circuit	3 Ph phase voltage
Current-transformer circuit	3 Ph phase current
Phase angle correction	120°
UI measuring channels	3-ph. voltage, 1-ph. current
Measurement mode	Phase-neutral

Table 61: Circuit 3-H

9.17.2.3 Special applications

The following circuits (S-1, S-2, S-3 and S-4) describe special cases of current measurement for hot-spot calculation on 3 different windings (e.g. three-winding transformer or transformer with tertiary winding).

Only use these circuits in symmetrical grids. Note that you must always take the W1 voltage and current measurements on the low-voltage side of the transformer.

- W1: Voltage measurement and current measurement for the power calculation and hot-spot calculation on winding 1
- W2: Current measurement for hot-spot calculation on winding 2
- W3: Current measurement for hot-spot calculation on winding 3

Circuit S-1

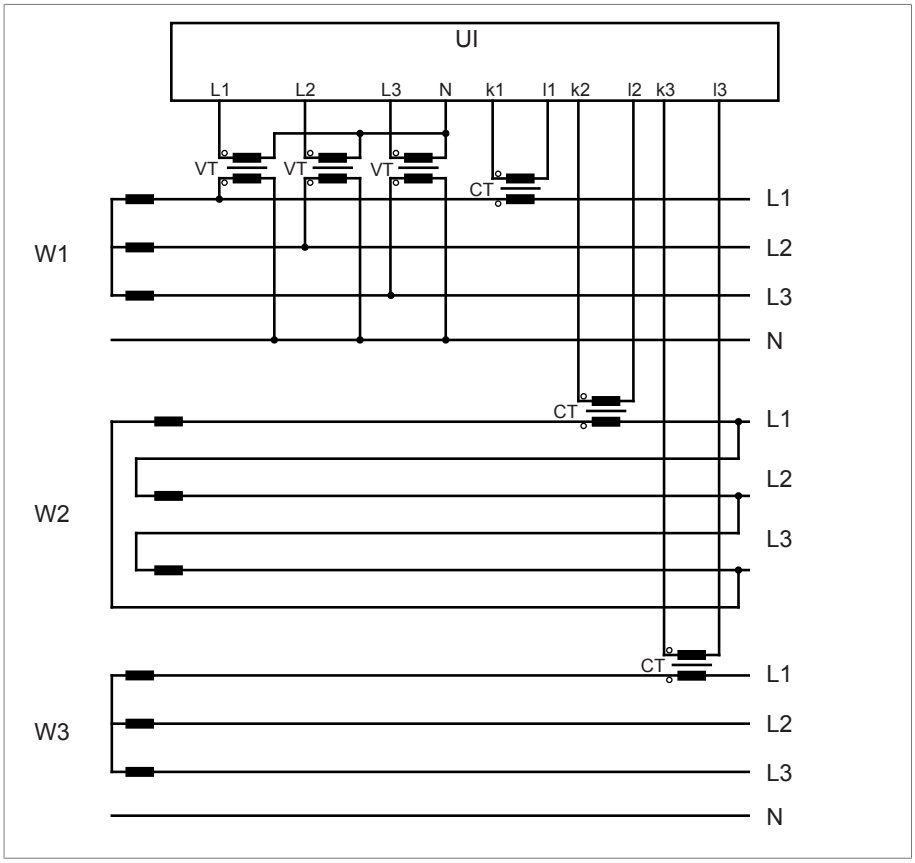

If you use this circuit, set the device as follows:

Parameters	Option
Voltage-transformer circuit	-
Current-transformer circuit	3 Ph phase current
Current-transformer circuit W2	Total current
Current-transformer circuit W3	Phase current
Phase angle correction	0°
UI measuring channels	3-ph. voltage, 1-ph. current
Measurement mode	Phase-neutral

Table 62: Circuit S-1

Circuit S-2

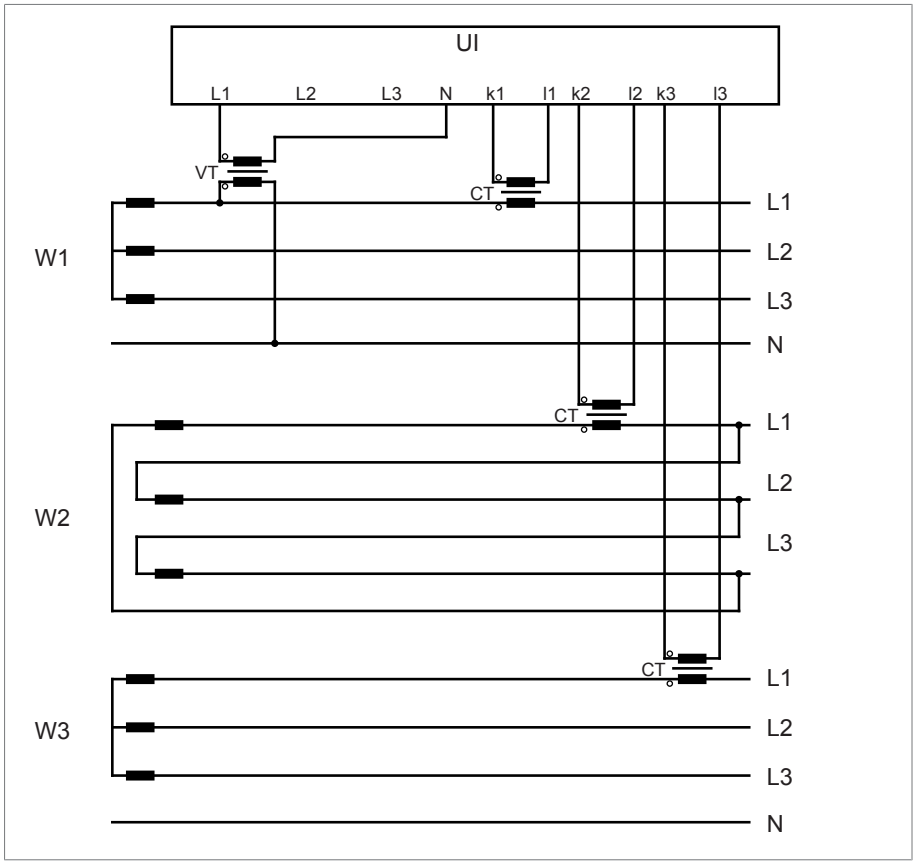

If you use this circuit, set the device as follows:

Parameters	Option
Voltage-transformer circuit	3 Ph phase voltage
Current-transformer circuit	3 Ph phase current
Current-transformer circuit W2	Total current
Current-transformer circuit W3	Phase current
Phase angle correction	0°
UI measuring channels	1-ph. measurement: Channel 1, 2, 3
Measurement mode	-

Table 63: Circuit S-2

Circuit S-3

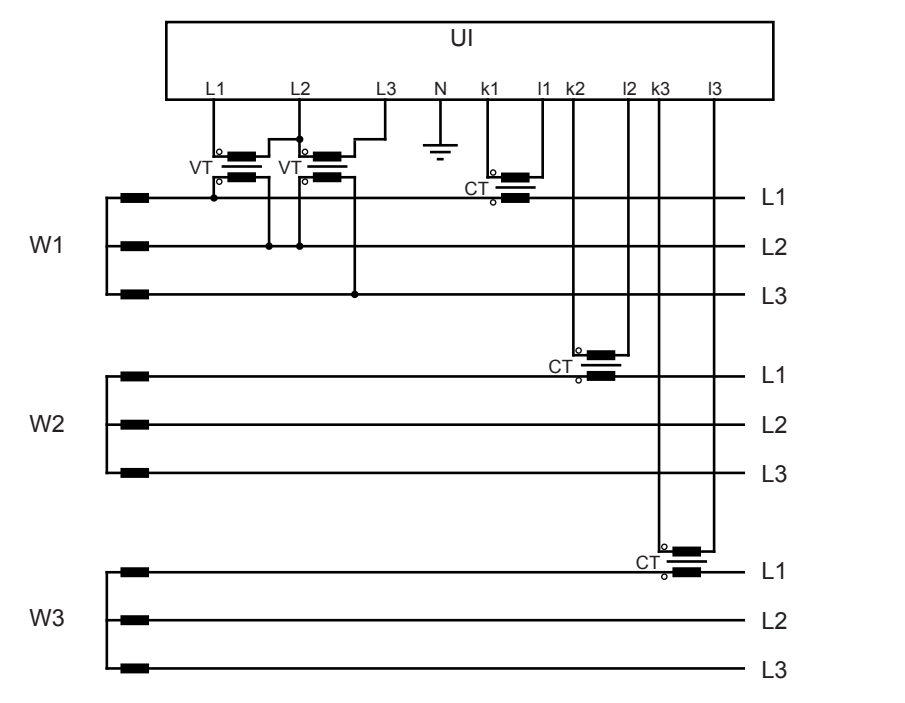

If you use this circuit, set the device as follows:

Parameters	Option
Voltage-transformer circuit	-
Current-transformer circuit	3 Ph phase current
Current-transformer circuit W2	Phase current
Current-transformer circuit W3	Phase current
Phase angle correction	0°
UI measuring channels	3-ph. voltage, 1-ph. current
Measurement mode	Phase-phase

Table 64: Circuit S-3

Circuit S-4

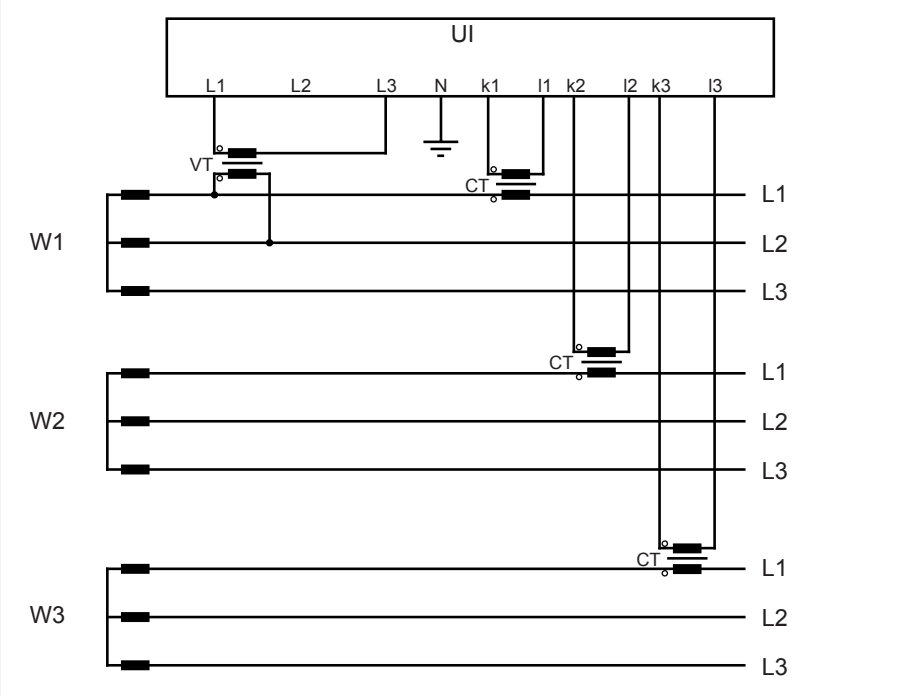

If you use this circuit, set the device as follows:

Parameters	Option
Voltage-transformer circuit	3 Ph differential voltage
Current-transformer circuit	3 Ph phase current
Current-transformer circuit W2	Phase current
Current-transformer circuit W3	Phase current
Phase angle correction	-30°
UI measuring channels	1-ph. measurement: Channel 1, 2, 3
Measurement mode	-

Table 65: Circuit S-4

9.18 Measurement

You can use the following parameters to configure the measurement of current and voltage.

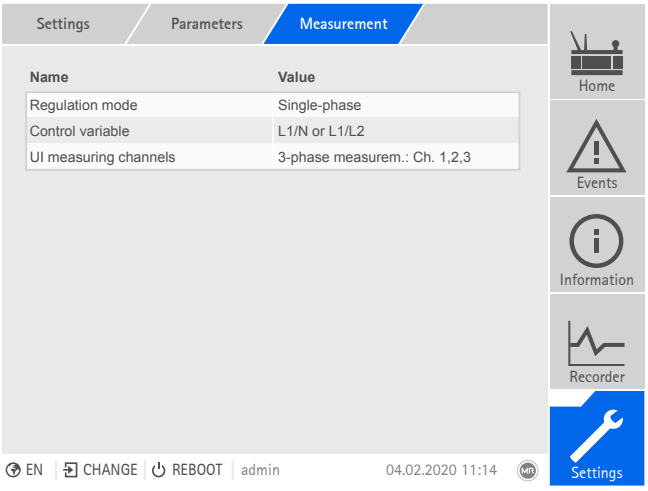

Figure 134: Measurement

1. Go to **Settings > Parameters > Grid > Measurement**.
2. Select the desired parameter.
3. Set the desired parameter.
4. Press the **Accept** button to save the modified parameter.

9.18.1 UI measuring channels

If you are measuring the voltage and current with the 3-phase UI 3 measuring module, you can use this parameter to set the measurement channels in use:

Option	Description
1-ph. measurement: Channel 1	The device uses 1 channel each for measurement of voltage and current.
3-ph. measurement: Channel 1, 2, 3	The device uses 3 channels each for measurement of voltage and current.
3-ph. voltage, 1-ph. current	The device uses 3 channels for voltage measurement and 1 channel for current measurement.

Table 66: UI measuring channels

9.18.2 Control variable

If you are measuring the voltage and current with the 3-phase UI 3 measuring module and using the "single-phase" regulation mode, this parameter can be used to select the phase used for voltage regulation. You can select the following options:

- L1/N or L1/L2
- L2/N or L2/L3
- L3/N or L3/L1

9.18.3 Regulation mode

If you are measuring the voltage and current with the 3-phase UI 3 measuring module, you can use this parameter to set whether you want 1-phase voltage regulation or voltage regulation to the average value of the 3 phases. You can select the following options:

- Single-phase: Voltage is automatically regulated to one selected phase. Limit value monitoring, line drop compensation, and parallel operation also take place on the selected phase using the circulating reactive current minimization method.
- Average value regulation: Voltage is automatically regulated to the average of the 3 phases. Limit value monitoring, line drop compensation, and parallel operation also take place using the circulating reactive current minimization method to the average of the 3 phases.

If you activate the average value regulation option, automatic voltage regulation is blocked should the voltage or current measurement of one of the 3 phases fail.

9.18.4 Display power factor negative

You can use this parameter to set whether the device is to display a negative power factor. You can select the following options:

Option	Description
Off	The power factor is always shown as positive.
P > 0	The power factor is shown as negative if the active power is positive.
P < 0	The power factor is shown as negative if the active power is negative.
Q > 0	The power factor is shown as negative if the reactive power is positive.
Q < 0	The power factor is shown as negative if the reactive power is negative.

Table 67: Setting the display for the power factor

9.19 Synchronizing the motor-drive unit

For commissioning, you have to synchronize the tap position of the on-load tap-changer using the control unit of the motor-drive unit.

Manual

To manually enter the current tap position, you have to know the current on-load tap-changer tap position. You can read the current tap position from the on-load tap-changer head. To do so, follow the operating instructions for the on-load tap-changer.

Make sure you set the correct tap position. Otherwise, it cannot be guaranteed that the motor-drive unit will function correctly.

Proceed as follows to enter the current tap position manually:

1. Go to **Settings > Calibrate hardware > Tap position (manual)**.
2. Select the current tap position of the on-load tap-changer.
3. Press the **Accept** button to save the modified parameter.

9.20 Line drop compensation

You can use the compensation function to compensate for the load-dependent voltage drop between the transformer and consumer. The device provides 2 methods of compensation for this purpose:

- R&X compensation
- Z compensation

9.20.1 R&X compensation

R&X compensation can compensate for voltage losses on the lines and therefore ensure correct voltage at the load. This requires precise line data. After you have entered all of the line data, the device automatically calculates the ohmic and inductive voltage drop and takes this into account for automatic voltage regulation.

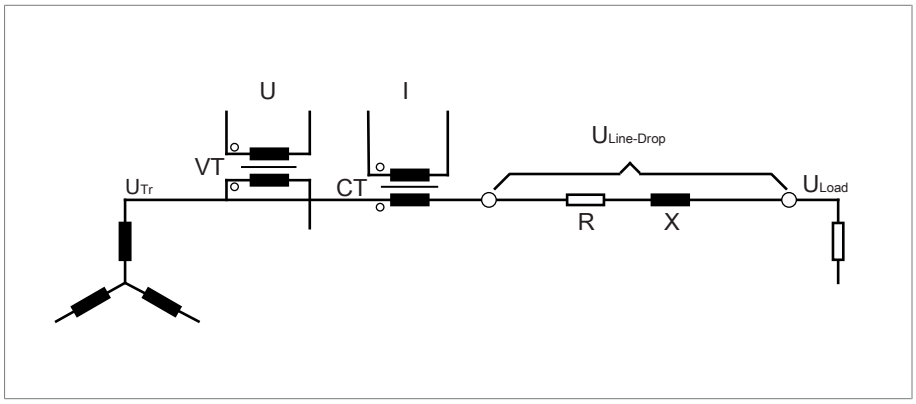

Figure 135: Equivalent circuit of R&X compensation

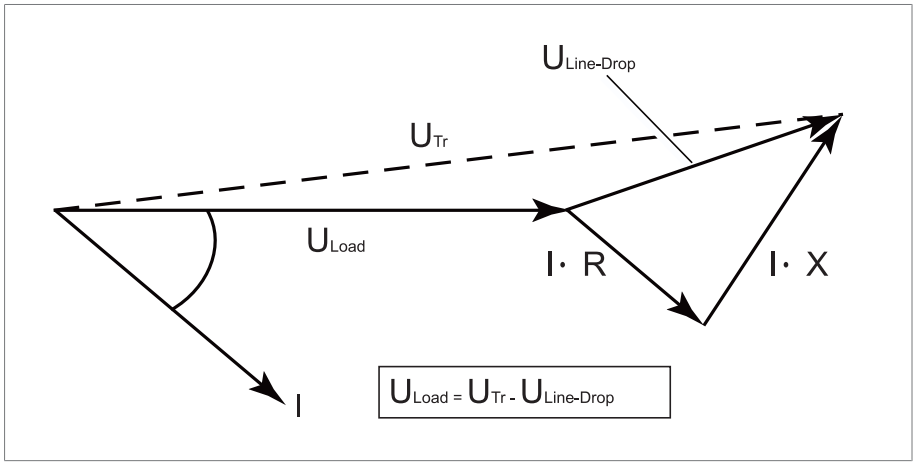

Figure 136: Phasor diagram of R&X compensation

To use R&X compensation, you have to enter the following line data:

- Ohmic resistance load in mΩ/m
- Inductive resistance load in mΩ/m
- Length of line in km

Figure 137: Compensation

1. Go to **Settings > Parameters > Grid > Compensation**.
2. Select the desired parameter.
3. Set the desired parameter.
4. Press the **Accept** button to save the modified parameter.

Compensation method

You can use this parameter to set the compensation method.

Ohmic resistance load

You can use this parameter to set the ohmic resistance load.

Inductive resistance load

You can use this parameter to set the inductive resistance load.

Length of line

You can use this parameter to set the length of line.

9.20.2 Z compensation

To keep the voltage constant for the consumer, you can use Z compensation to activate a current-dependent voltage increase. You can also define a limit value to avoid excess voltage on the transformer.

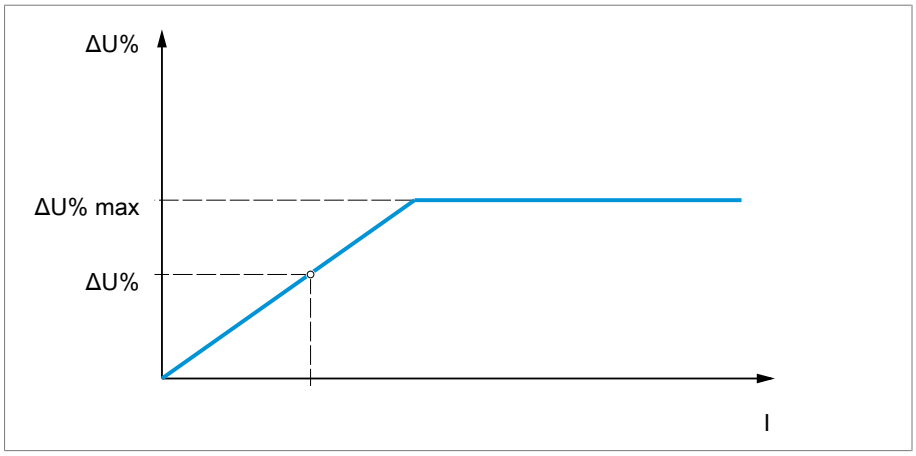

Figure 138: Z compensation

To use Z compensation, you need to calculate the voltage increase (ΔU) taking the current into account. Use the following formula for this purpose:

$$\Delta U = \frac{U_{Tr} - U_{Load}}{U_{Load}} \times \frac{I_N \times k_{CT}}{I} \times 100\,\%$$

ΔU	Voltage increase	I	Load current in A
U_{Tr}	Transformer voltage at current I	I_N	Nominal current of current-transformer connection in A
U_{Load}	Voltage on line end at current I and on-load tap-changer in same operating position	k_{CT}	Current transformer transmission ratio

Sample calculation: U_{Tr} = 100.1 V, U_{Load} = 100.0 V, I_N = 5 A k_{CT} = 200 A/5 A, I = 100 A

Produces a voltage increase ΔU of 0.2%

Figure 139: Compensation

1. Go to **Settings > Parameters > Grid > Compensation**.
2. Select the desired parameter.
3. Set the desired parameter.
4. Press the **Accept** button to save the modified parameter.

Compensation method

You can use this parameter to set the compensation method.

Voltage increase

You can use this parameter to set the current-dependent voltage increase ΔU.

Voltage limit value

You can use this parameter to define the maximum permissible voltage increase to avoid excess voltage on the transformer.

9.21 Parallel operation (optional)

Parallel transformer operation is used to increase the throughput capacity or short-circuit capacity at one location. The device provides you with specific functions for regulating transformers.

Conditions for parallel operation

Compliance with the following general conditions is required for operating transformers in parallel:

- Identical rated voltages
- Transformer power ratio (< 3 : 1)
- Maximum deviation of short-circuit voltages (U_K) for transformers connected in parallel < 10%
- Same number of switching groups
- For parallel operation with CAN communication: Current transformers with the same rated values must be used for all devices operating in parallel

9.21.1 Parallel operation methods

You can undertake parallel operation with various parallel operation methods.

9.21.1.1 Tap synchronization

With the **tap synchronization** parallel operation method, one voltage regulator works as the master and all others as followers.

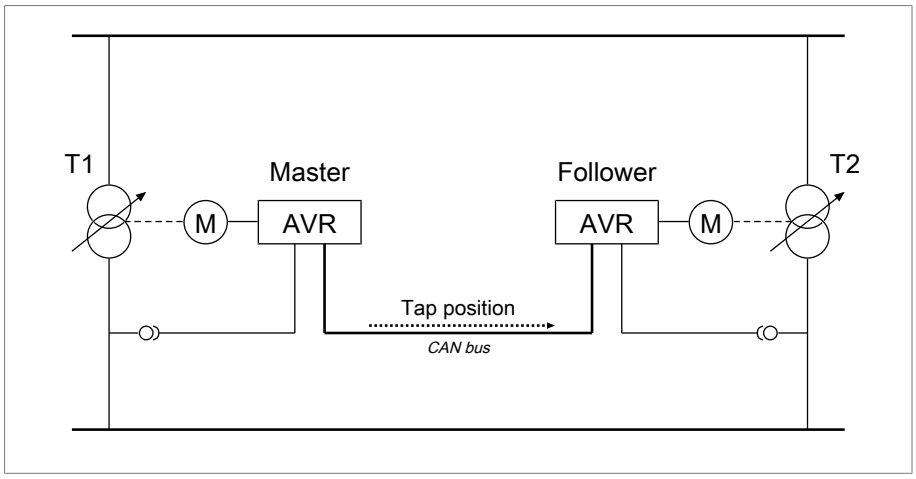

Figure 140: Tap synchronization

The master handles voltage regulation and transmits its current tap positions to all followers via the CAN bus. The followers compare the tap position received with their own tap position. If the tap position is not the same, the followers switch to the tap position received from the master. This ensures that the transformers operating in parallel are always in the same tap position.

You can set whether the master transfers the change in tap position to the followers before or after its own tap-change operation. The devices then either change position sequentially (first the master, then the followers) or in synch (master and followers at the same time).

If there is a tap difference between the master and followers, the master refrains from issuing any control commands to the motor-drive unit until all of the followers have reached the same tap position. If the tap difference persists for longer than the set delay time for parallel operation error messages, the master triggers the *Step difference to follower* event.

You can explicitly designate the voltage regulators as master and followers, or set automatic designation using the CAN bus address.

For the tap synchronization parallel operation method, you have to set the following parameters:

Parameter	Auto	Master	Follower
Activate parallel operation		Yes	
Parallel operation method	Auto. tap synchronization	Master	Follower
CAN bus address		Yes	
Circul. reactive current blocking limit	Optional, if master/follower current blocking is active		
Master/follower current blocking		Yes	
Master/follower switching characteristics		Yes	
Maximum tap difference	Yes (if follower)	No	Yes
Error if no communication present		Yes	
Behavior if no communication present		Yes	
Parallel operation error delay time		Yes	

Table 68: Parameter

9.21.1.2 Circulating reactive current minimization with CAN bus communication

With the **circulating reactive current** parallel operation method, parallel operation is carried out using the circulating reactive current minimization method.

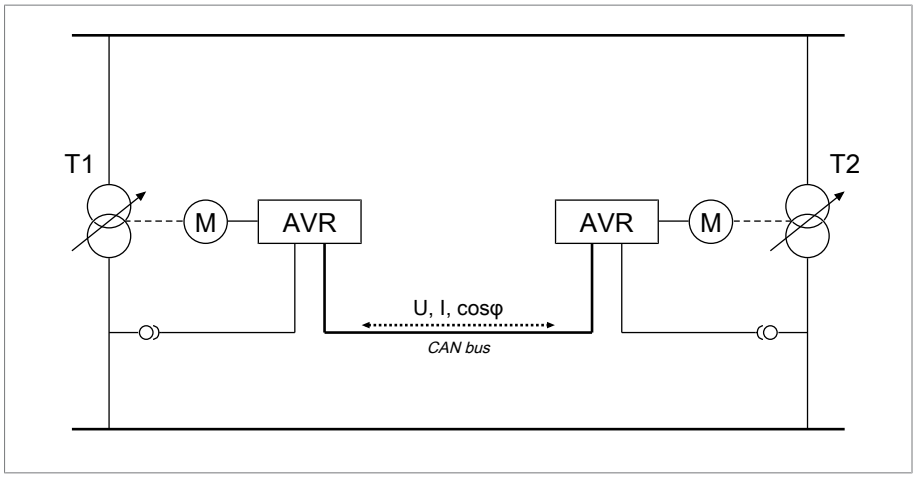

Figure 141: Circulating reactive current minimization with CAN bus communication

The circulating reactive current is calculated from the transformer currents and their phase angles. The voltage regulators in the parallel operation group share this information via CAN bus. An extra control deviation proportional to circulating reactive current is added to the independently regulating voltage regulators as a correction for the control deviation determined on the basis of the measurement voltage. You can use the circulating reactive current sensitivity parameter to decrease or increase this extra control deviation.

The circulating reactive current method is suited to transformers connected in parallel with a similar nominal output and short-circuit voltage U_K and to vector groups with the same and different step voltages. This does not require any information about the tap position.

Note that the following prerequisites must be met for the "circulating reactive current minimization" parallel operation method:

- You have to use current transformers with the same rated values for all transformers in parallel operation.
- If you wish to operate in parallel operation with existing devices, you have to activate the Retrofit TAPCON® 2xx [▶Section 9.21.3, Page 223] parameter.

For the circulating reactive current minimization parallel operation method with CAN communication, you have to set the following parameters:

- Activate parallel operation
- Parallel operation method: Circulating reactive current
- CAN bus address
- Circulating reactive current sensitivity
- Circul. reactive current blocking limit

- Error if no communication present
- Behavior if no communication present
- Parallel operation error delay time

9.21.1.3 Circulating reactive current minimization without CAN bus communication

With this method, you can operate several voltage regulators without a communication connection (CAN bus) in parallel with circulating reactive current minimization.

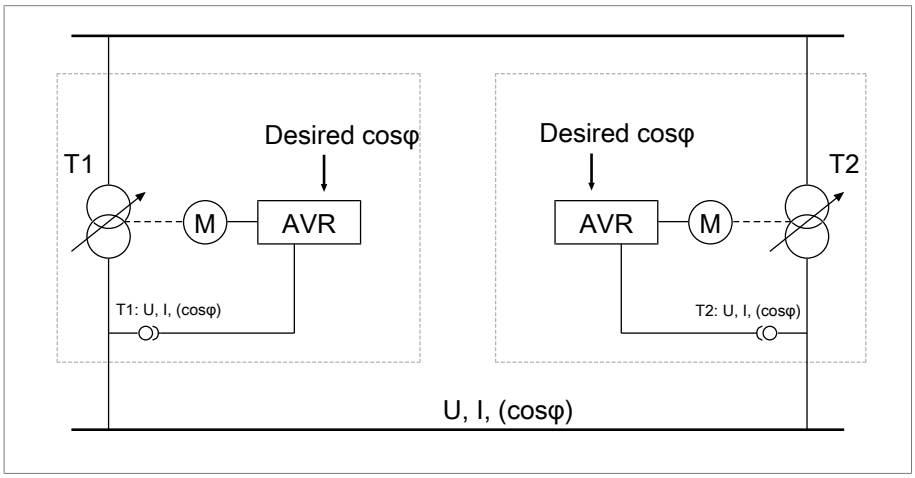

Figure 142: Circulating reactive current minimization without CAN bus communication

The circulating reactive current is calculated using the desired power factor parameter, the desired load stress type parameter, and the measured transformer current. An extra control deviation proportional to circulating reactive current is added to the independently regulating voltage regulators as a correction for the control deviation determined on the basis of the measurement voltage. This extra control deviation depends on how much the measured power factor deviates from the desired power factor.

To use the power factor method, you need to know the conditions of your network in order to correctly set the device parameters.

The power factor method is suited to transformers connected in parallel with a similar nominal output and short-circuit voltage U_K and to vector groups with the same and different step voltages. This does not require any information about the tap position.

For the circulating reactive current minimization parallel operation method without CAN communication, you have to set the following parameters:

- Activating parallel operation
- Parallel operation method: Power factor
- Circulating reactive current sensitivity
- Circulating reactive current blocking limit
- Desired power factor

- Desired load stress type
- Parallel operation error delay time

Note that the parameters "Error if no communication" and "Behavior if no communication" have no function in the circulating reactive current minimization without CAN communication parallel operation method.

9.21.2 Configuring parallel operation

In the **Parallel operation** menu item, you can set the parameters needed for parallel transformer operation.

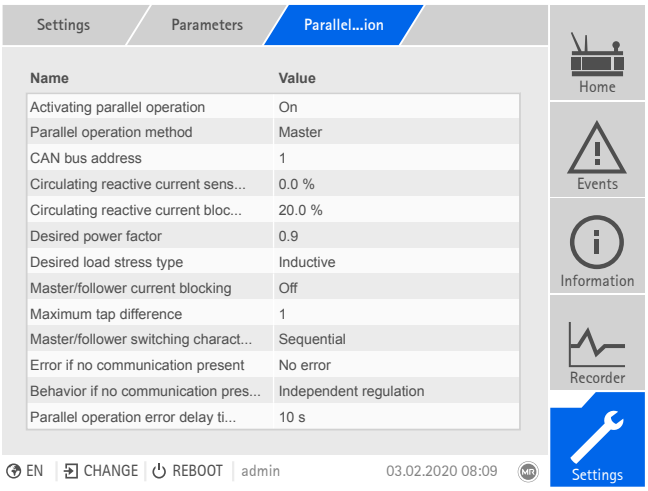

Figure 143: Parallel operation

1. Go to **Settings > Parameters > Grid > Parallel operation**.
2. Select the desired parameter.
3. Set the desired parameter.
4. Press the **Accept** button to save the modified parameter.

Activating parallel operation

You can use this parameter to activate parallel operation.

Parallel operation method

You can use this parameter to set the parallel operation method. You can select the following options:

Option	Description	
Master	The device is designated as the master.	Tap synchronization [▶Section 9.21.1.1, Page 215] parallel operation method
Follower	The device is designated as the follower.	
Auto. tap synchronization	Automatic assignment of master or follower. If a master is not detected, the device with the lowest CAN bus address is automatically designated as the master. All other devices are designated as followers.	
Circulating reactive current	Circulating reactive current minimization with CAN bus communication [▶Section 9.21.1.2, Page 217] parallel operation method	
Power factor	Circulating reactive current minimization without CAN bus communication [▶Section 9.21.1.3, Page 218] parallel operation method	
Tap stagger (optional)	The device is designated as the master for the tap stagger parallel operation method.	

Table 69: Setting parallel operation method

Only change the parallel operation method when the on-load tap-changers are not performing tap-change operations.

CAN bus address

You can use this parameter to assign a CAN bus address to the device. So that all devices can communicate using the CAN bus, each device requires a unique identifier. If the value is set to 0, then no communication takes place.

Circulating reactive current sensitivity

You can use this parameter to set the influence of circulating reactive current on how the control deviation is calculated. The higher the set value, the greater the calculated control deviation as a result of circulating reactive current.

To determine the ideal circulating reactive current sensitivity, note the relevant section in the Commissioning chapter.

Circulating reactive current blocking limit

You can use this parameter to set the limit value for the maximum permissible circulating reactive current. This value relates to the rated current of the current transformer. If, during parallel operation, the circulating reactive current exceeds the set limit value, the device triggers the *Circulating reactive current blocking limit exceeded* event. All devices operating in the parallel operation group are blocked.

Desired power factor

You can use this parameter to set the power factor, which the transformer has under normal operating conditions. If the measured power factor deviates from the desired one, the device calculates a correction which is added to the control deviation.

Enter a desired power factor other than 0. If you enter a desired power factor of 0, the device is not able to calculate the voltage correction.

Desired load stress type

You can use this parameter to set the load stress type, which the transformer has under normal operating conditions.

You can determine the load stress type using the phase angle difference between voltage and current. You calculate the phase angle difference as follows:

$$\varphi_{UI} = \varphi_U - \varphi_I$$

Figure 144: Calculation of phase angle difference

φ_{UI}	Phase angle difference between voltage and current
φ_U	Phase angle of voltage
φ_I	Phase angle of current

Depending on the calculated phase angle difference, you have to select the following option:

- $\varphi_{UI} > 0$: Inductive
- $\varphi_{UI} < 0$: Capacitive

Master/follower current blocking

You can use this parameter to activate the circulating reactive current blocking limit for the tap synchronization parallel operation method. The device thereby calculates and monitors the circulating reactive current in the same manner as the parallel operation method for circulating reactive current mini-

mization, and provides you with the safety function of circulating reactive current blocking. The Circulating reactive current blocking parameter is used to set the limit value.

Master/follower switching characteristics

You can use this parameter to set the switching characteristics for the tap synchronization parallel operation method.. You can select the following options:

- Sequentially: When a tap-change operation takes place, the master communicates its new tap position to the followers via the CAN bus as soon as the master has completed its tap-change operation. The tap-change operations of the master and followers thereby take place one after another (sequentially).
- In sync: When a tap-change operation takes place, the master communicates its new tap position to the followers via the CAN bus as the master starts its tap-change operation. The tap-change operations of the master and followers thereby take place at almost the same time (in synch).

Maximum tap difference

You can use this parameter to set the maximum permissible tap difference between followers and master on the follower.

If the tap difference is greater than the set maximum tap difference to the master, the follower blocks and no longer attempts to attain the master's tap position. After the set delay time for parallel operation error messages has elapsed, the follower issues the *Permitted tap difference to master exceeded* message.

Error if no communication present

You can use this parameter to set whether it is an error if the device does not receive any messages via the CAN bus or if there are no other CAN bus participants in the same parallel operation group.

Behavior if no communication present

You can use this parameter to set how the voltage regulator behaves if communication via the CAN bus is not possible.

The setting for this parameter is only effective if you have selected the **Error** option for the **Error if no communication present** parameter.

You can select the following options:

Option	Description
Independent regulation	The device switches from parallel operation to normal automatic voltage regulation
Auto blocking	Automatic voltage regulation is blocked.
cosφ interpolation	Continuation of parallel operation with interpolated values (only possible with circulating reactive current parallel operation method)
Power factor	Circulating reactive current minimization without CAN bus communication [▶Section 9.21.1.3, Page 218] parallel operation method

Table 70: Behavior if no communication present

Parallel operation error delay time

You can use this parameter to set the delay time for a parallel operation error message so that brief fault messages are not received if the motor-drive units involved in the parallel operation have different runtimes.

9.21.3 TAPCON® 2xx retrofit

The TAPCON® 2xx retrofit function allows you to operate the device in parallel operation with existing devices. Parallel operation with the following existing devices is supported:

- TAPCON® 230 pro/expert
- TAPCON® 240
- TAPCON® 250
- TAPCON® 260
- TRAFOGUARD® with "Voltage regulation" options package

If you wish to operate several devices in parallel operation with existing devices, you have to activate the TAPCON® 2xx retrofit function on each device.

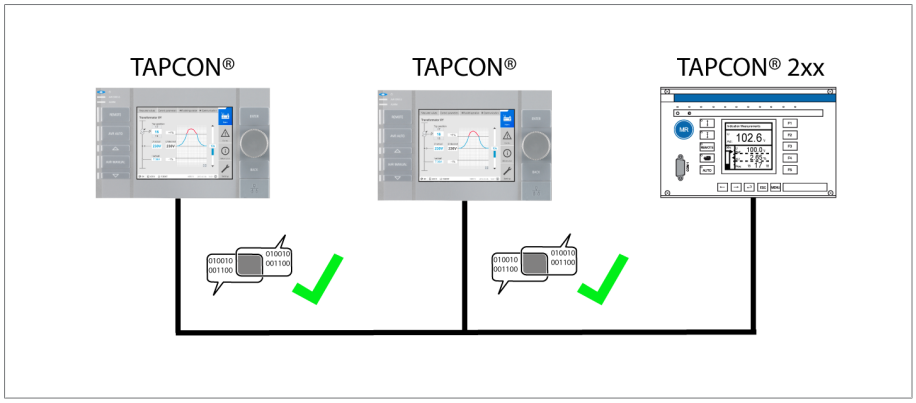

Figure 145: Parallel operation of 2 devices with one TAPCON® 2xx. The TAPCON® 2xx retrofit function must be active on both devices.

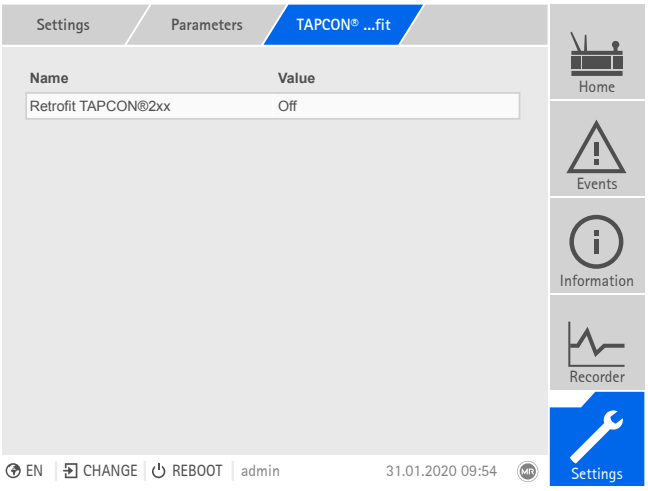

Figure 146: Retrofit TAPCON® 2xx

1. Go to **Settings > Parameters > Grid > TAPCON® 2xx retrofit**.
2. Select the desired parameter.
3. Set the desired parameter.
4. Press the **Accept** button to save the modified parameter.

TAPCON® 2xx retrofit

You can use this parameter to activate or deactivate the Retrofit TAPCON® 2xx function.

If you activate this parameter, you have to reverse the prefix of the "Phase angle correction" parameter for the transformer data (from - to + or from + to -).

9.21.4 Detecting parallel operation via group inputs (optional)

You can control up to 16 transformers connected in parallel in one or 2 groups without detecting the system topology.

The devices in parallel operation only use the information communicated by devices in the same parallel operation group via CAN bus.

You can use the *PARALLEL GROUP 1* and *PARALLEL GROUP 2* inputs to assign the device to a parallel operation group. If you create a signal at both inputs, the device is assigned to both parallel operation groups.

If no parallel operation group is assigned to a device, it doesn't take part in the parallel operation and undertakes its own voltage regulation.

9.22 Monitoring functions

For various measured values, you can define limit values that are monitored by the device.

9.22.1 Voltage monitoring

In order to monitor the transformer's current output voltage, you can set 4 limit values:

- Undervoltage U<<: Lower limit 2
- Undervoltage U<: Lower limit 1
- Overvoltage U>: Upper limit 1
- Overvoltage U>>: Upper limit 2

If the measured value is higher than the upper limit (> or >>) or lower than the lower limit (< or <<), the device transmits an event message.

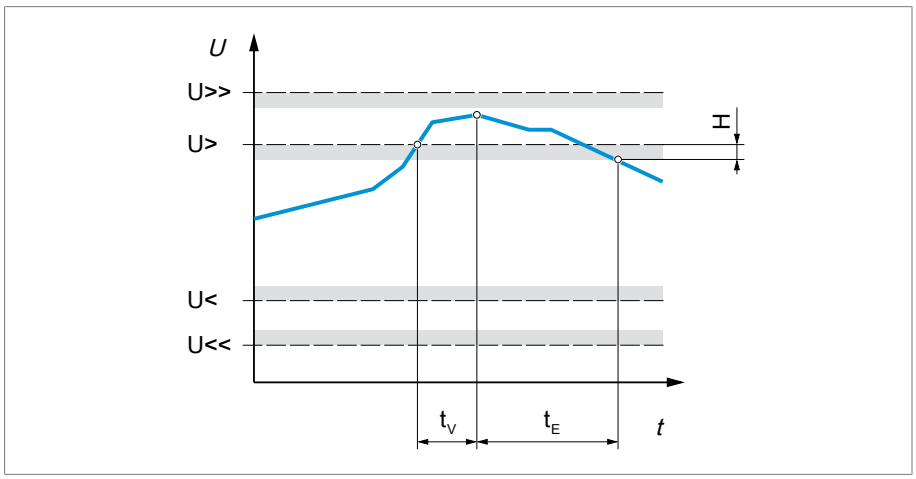

Figure 147: Example of voltage monitoring with the limit value Overvoltage U> being exceeded

U>>	Overvoltage U>>	U>	Overvoltage U>
U<	Undervoltage U<	U<<	Undervoltage U<<
t_V	Delay time	t_E	Event duration
H	Hysteresis		

You can set the following parameters for each limit value:

- Relative/absolute limit value
- Limit value [V]: Absolute limit value
- Limit value [%]: Limit value relative to the desired voltage value (only for devices with voltage regulation)
- Hysteresis limit value
- Delay time limit value
- Behavior limit value (only for devices with voltage regulation)

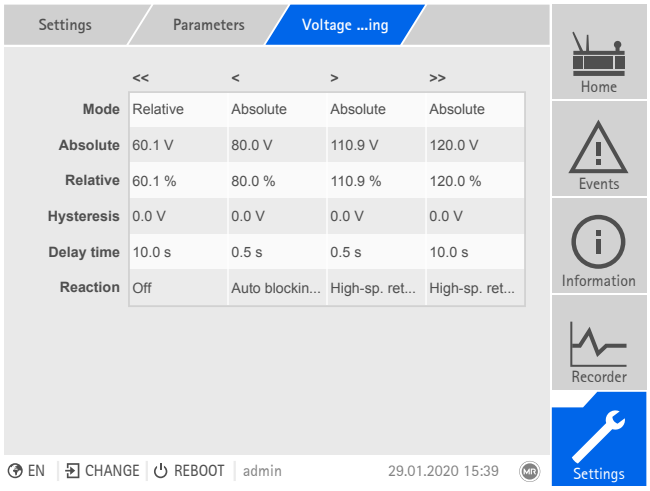

Figure 148: Voltage monitoring

1. Go to **Settings > Parameters > Grid > Voltage monitoring**.
2. Select the desired parameter.
3. Set the desired parameter.
4. Press the **Accept** button to save the modified parameter.

Mode

You can use this parameter to set which limit value you would like to use:

- Absolute: The device uses the absolute limit value in V.
- Relative: The device uses the relative limit value in %, relative to the desired voltage value.

Absolute

You can use this parameter to specify an absolute limit value in V (relative to the secondary value of the voltage transformer) or in kV (relative to the primary value of the voltage transformer). Unlike the relative value, this limit is not dependent on a reference value.

Percentage

You can use this parameter to set the limit value relative to the desired voltage value.

Hysteresis

You can use this parameter to set the hysteresis. You can use this to avoid the unnecessary generation of messages if the measured value fluctuates around a threshold value.

Delay time

You can use this parameter to set the delay time in order to delay the issuing of the event message.

Reaction

You can use this parameter to set the behavior of the device if the measured value is higher than the upper limit (> or >>) or lower than the lower limit (< or <<). You can select the following options:

Setting	Behavior
Off	No reaction.
High-speed return	For U</U<<: The device performs tap-change operations in the raise voltage direction (U+) until the measured voltage is back above the limit value. For U>/U>>: The device performs tap-change operations in the lower voltage direction (U-) until the measured voltage is back below the limit value. With high-speed return, the device ignores the set delay time of automatic voltage regulation.
Auto blocking	Automatic regulation is blocked. You can continue to perform tap-change operations in manual mode.
Auto/manual blocking	Automatic regulation is blocked. You **cannot** perform tap-change operations in manual mode.

Table 71: Behavior when an event message is issued

9.22.2 Current monitoring

For monitoring the transformer's current load current, you can set 4 limit values:

- I<<: Lower limit 2
- I<: Lower limit 1
- I>: Upper limit 1
- I>>: Upper limit 2

If the measured value is higher than the upper limit (> or >>) or lower than the lower limit (< or <<), the device transmits an event message.

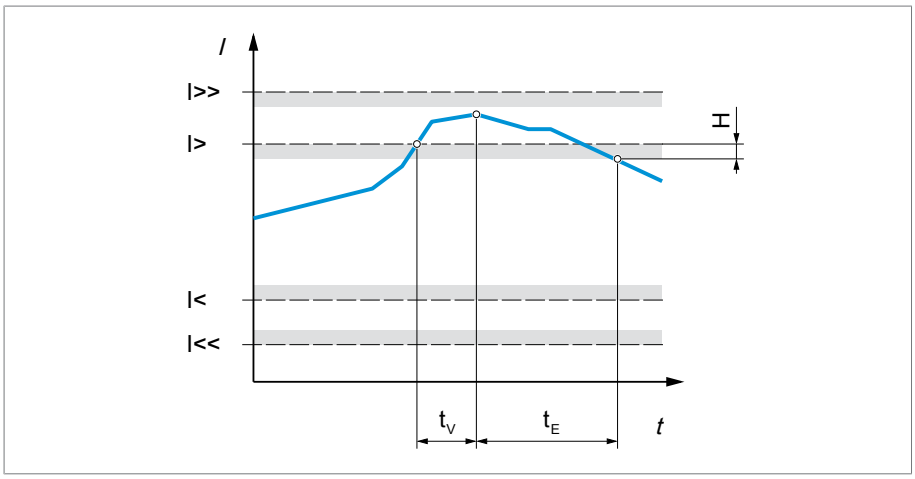

Figure 149: Example of current monitoring with the limit value I> being exceeded

I>>	Upper limit 2	I>	Upper limit 1
I<	Lower limit 1	I<<	Lower limit 2
t_V	Delay time	t_E	Event duration
H	Hysteresis		

You can set the following parameters for each limit value:

- Relative/absolute limit value
- Limit value [A] or [kA]: Absolute limit value
- Limit value [%]: Limit value relative to the rated current of current transformer. With current measurements via the analog input, the value is relative to the maximum value of the analog input (e.g. 100% = 20 mA).
- Hysteresis limit value
- Delay time limit value
- Behavior limit value (only for devices with voltage regulation)

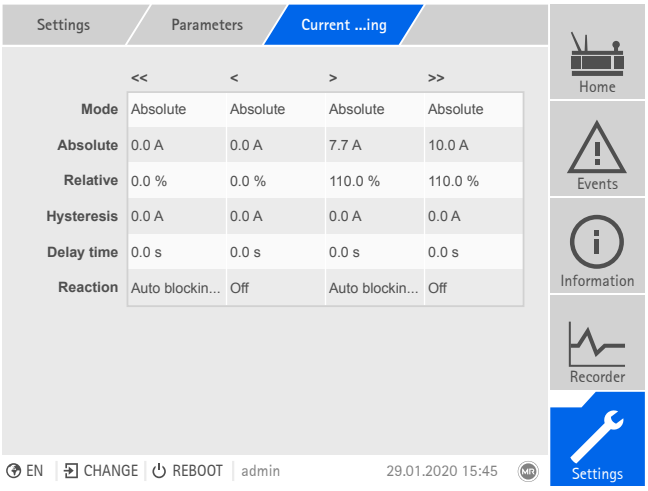

Figure 150: Current monitoring

1. Go to **Settings > Parameters > Grid > Current monitoring**.
2. Select the desired parameter.
3. Set the desired parameter.
4. Press the **Accept** button to save the modified parameter.

Mode

You can use this parameter to set which limit value you would like to use:

- Absolute: The device uses the absolute limit value in A/kA.
- Relative: The device uses the relative limit value in %, relative to the rated current of current transformer.

Absolute

You can use this parameter to specify an absolute limit value in A (in relation to the secondary value of the current transformer) or in kA (in relation to the primary value of the current transformer).

Percentage

You can use this parameter to set the limit value relative to the rated current of current transformer. With current measurements via the analog input, the value is relative to the maximum value of the analog input (e.g. 100% = 20 mA).

Hysteresis

You can use this parameter to set the hysteresis. You can use this to avoid the unnecessary generation of messages if the measured value fluctuates around a threshold value.

Delay time

You can use this parameter to set the delay time in order to delay the issuing of the event message.

Reaction

You can use this parameter to set the behavior of the device if the measured value is higher than the upper limit (> or >>) or lower than the lower limit (< or <<). You can select the following options:

Setting	Behavior
Off	No reaction.
Auto blocking	Automatic regulation is blocked. You can continue to perform tap-change operations in manual mode.
Auto/manual blocking	Automatic regulation is blocked. You **cannot** perform tap-change operations in manual mode.

Table 72: Behavior when an event message is issued

9.22.3 Power monitoring

For monitoring the transformer's current power, you can set the following limit values:

Measured value	Lower limit 2	Lower limit 1	Upper limit 1	Upper limit 2
Apparent power	S<<	S<	S>	S>>
Active power	P<<	P<	P>	P>>
Reactive power	Q<<	Q<	Q>	Q>>
Power factor (amount)	|cos φ|<<	|cos φ|<	-	-

Table 73: Limit values for power monitoring

You can set the following parameters for each limit value:

- Limit value: Absolute limit value
- Hysteresis limit value
- Delay time limit value
- Behavior limit value (only for devices with voltage regulation)

If the measured value is higher than the upper limit (> or >>) or lower than the lower limit (< or <<), the device issues an event message.

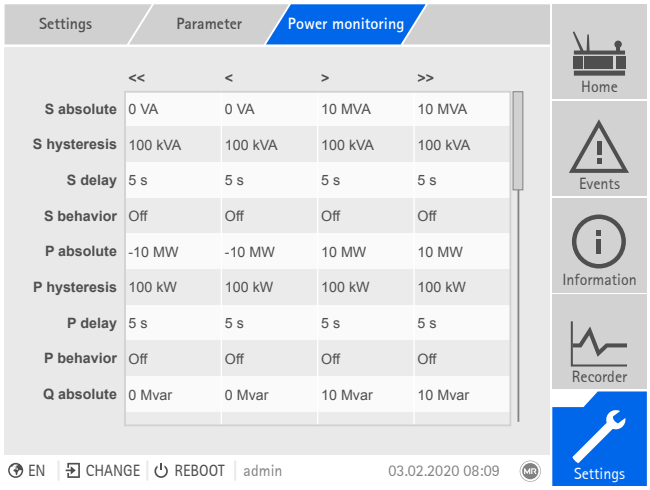

Figure 151: Power monitoring

1. Go to **Settings > Parameters > Grid > Power monitoring**.
2. Select the desired parameter.
3. Set the desired parameter.
4. Press the **Accept** button to save the modified parameter.

Absolute

You can use this parameter to specify a limit value.

Hysteresis

You can use this parameter to set the hysteresis. You can use this to avoid the unnecessary generation of messages if the measured value fluctuates around a threshold value.

Delay time

You can use this parameter to set the delay time in order to delay the issuing of the event message.

Reaction

You can use this parameter to set the behavior of the device if the measured value is higher than the upper limit (> or >>) or lower than the lower limit (< or <<). You can select the following options:

Setting	Behavior
Off	No reaction.
Auto blocking	Automatic regulation is blocked. You can continue to perform tap-change operations in manual mode.
Auto blocking position-	The automatic control does not perform a tap-change operation in the direction of a lower tap position (position-). You can continue to perform tap-change operations in manual mode.
Auto blocking position+	The automatic control does not perform a tap-change operation in the direction of a higher tap position (position+). You can continue to perform tap-change operations in manual mode.
Auto/manual blocking	Automatic regulation is blocked. You **cannot** perform tap-change operations in manual mode.
Auto/manual blocking position-	The automatic control does not perform a tap-change operation in the direction of a lower tap position (position-). You **cannot** perform a tap-change operation in the direction of a lower tap position (position-) in manual mode.
Auto/manual blocking position+	The automatic control does not perform a tap-change operation in the direction of a higher tap position (position+). You **cannot** perform a tap-change operation in the direction of a higher tap position (position+) in manual mode.

Table 74: Behavior when an event message is issued

9.22.4 Power flow monitoring

A reversal of power flow occurs if the active power is negative. You can set the following parameters for this:

- Hysteresis
- Delay time
- Behavior

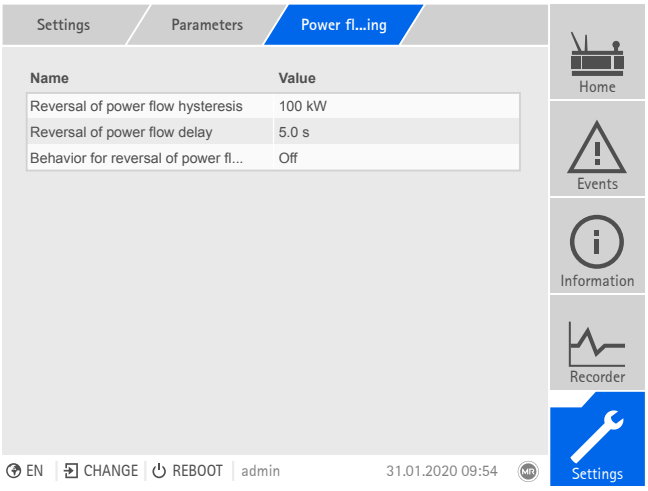

Figure 152: Power flow monitoring

1. Go to **Settings > Parameters > Grid > Power flow monitoring**.
2. Select the desired parameter.
3. Set the desired parameter.
4. Press the **Accept** button to save the modified parameter.

Hysteresis

You can use this parameter to set the hysteresis. You can use this to avoid the unnecessary generation of messages if the measured value fluctuates around a threshold value.

Delay time

You can use this parameter to set the delay time in order to delay the issuing of the event message.

Behavior for reversal of power flow

You can use this parameter to set the behavior in the event of a reversal of power flow. You can select the following options:

Setting	Behavior
Off	▪ The negative power flow is ignored. ▪ Automatic regulation remains active.
Event only	▪ The *Reversal of power flow* event is issued. ▪ If Z compensation is activated, this function is deactivated. ▪ Automatic regulation remains active.
Auto blocking	▪ The *Reversal of power flow* event is issued. ▪ If Z compensation is activated, this function is deactivated. ▪ Automatic regulation is blocked.

Setting	Behavior
Auto/manual blocking	▪ The *Reversal of power flow* event is issued. ▪ If Z compensation is activated, this function is deactivated. ▪ Automatic regulation is blocked. ▪ You cannot perform tap-change operations in manual mode.
Target tap position	▪ The *Reversal of power flow* event is issued. ▪ If Z compensation is activated, this function is deactivated. ▪ The device triggers a tap-change operation to the tap position you defined in the "Target tap position" [▶Section 9.23, Page 244] parameter. ▪ The device blocks further tap-change operations. ▪ The target-tap-position operation is ignored if there is no tap-position capture. Automatic regulation is blocked.

Table 75: Behavior in the event of a reversal of power flow

9.22.5 Tap position monitoring (optional)

You can set 2 limit values for tap position monitoring:

- Pos<
- Pos>

You can set the following parameters for each limit value.

- Delay time limit value
- Behavior limit value

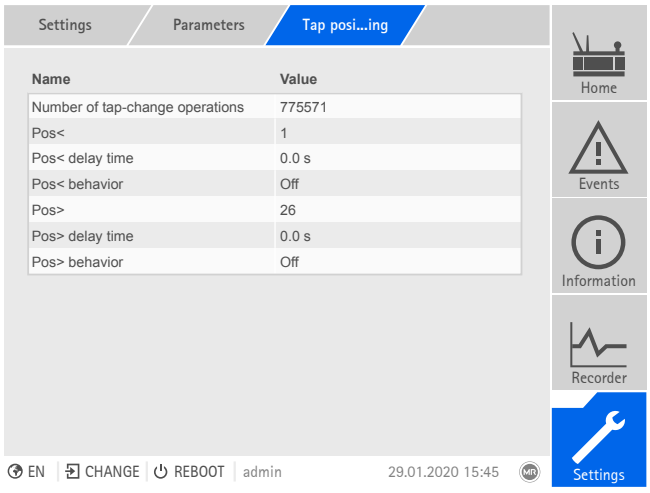

Figure 153: Tap position monitoring

1. Go to **Settings > Parameters > On-load tap-changer > Tap position monitoring**.
2. Select the desired parameter.
3. Set the desired parameter.
4. Press the **Accept** button to save the modified parameter.

Delay time

You can use this parameter to set the delay time in order to delay the issuing of the event message.

Behavior limit value

You can use this parameter to set the behavior of the device when the event message is issued. You can select the following options:

Setting	Behavior
Off	Tap position monitoring is disabled.
Auto blocking position+	The automatic control does not perform a tap-change operation in the direction of a higher tap position (position+). You can still perform a tap-change operation in the direction of a higher tap position (position+) in manual mode.
Auto blocking position-	The automatic control does not perform a tap-change operation in the direction of a lower tap position (position-). You can still perform a tap-change operation in the direction of a lower tap position (position-) in manual mode.
Auto/manual blocking position+	The automatic control does not perform a tap-change operation in the direction of a higher tap position (position+). You cannot perform a tap-change operation in the direction of a higher tap position (position+) in manual mode.
Auto/manual blocking position-	The automatic control does not perform a tap-change operation in the direction of a lower tap position (position-). You cannot perform a tap-change operation in the direction of a lower tap position (position-) in manual mode.

Operations counter

The device's operations counter is automatically increased with every tap-change operation. You can use this parameter to set the number of tap-change operations, such as for a comparison with the operations counter of the motor-drive unit.

9.22.6 U bandwidth monitoring

The following limit values are monitored via bandwidth monitoring. The set bandwidth [▶Page 184] of the voltage regulation is used for this purpose.

- Upper bandwidth
- Lower bandwidth

You can set the following parameters for each limit value:

- Hysteresis limit value: Specification as a percentage relative to the desired voltage value.
- Delay time limit value

Behavior If the measured value is higher than the upper limit or lower than the lower limit, the device triggers the *Upper bandwidth limit value / Lower bandwidth limit value* message.

The "Function monitoring" function is used to detect long periods when values are above or below the bandwidth. Long periods when values are above or below the bandwidth indicate a problem with the device function because the device is not able to correct the control deviation.

If the value is above or below the set bandwidth [▶Page 184], the *Function monitoring* event is displayed after the set delay time for function monitoring has elapsed. The event is automatically acknowledged as soon as the measured value is back within the set bandwidth.

The following parameters are available for setting function monitoring:

- Function monitoring
- Hysteresis
- Delay time

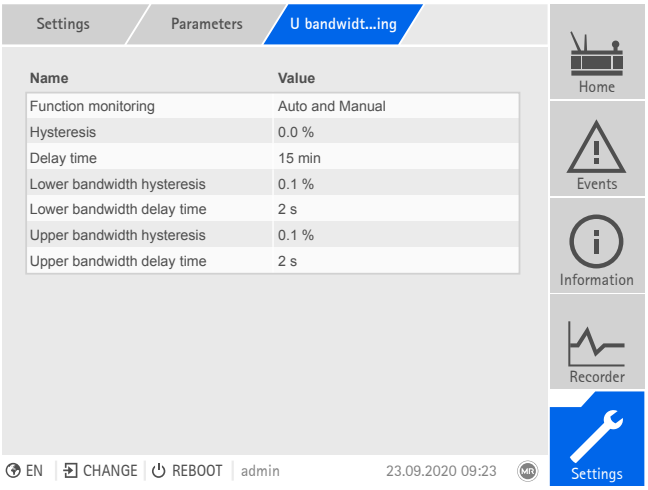

Figure 154: U bandwidth monitoring

1. Go to **Settings > Parameters > On-load tap-changer regulator > U bandwidth monitoring**.
2. Select the desired parameter.
3. Set the desired parameter.
4. Press the **Accept** button to save the modified parameter.

Function monitoring

You can use this parameter to activate function monitoring. You can select the following options:

Setting	Behavior
Off	Function monitoring is deactivated.
Only Auto	Function monitoring is only active in AVR AUTO operating mode.
Auto and Manual	Function monitoring is active in AVR AUTO and AVR MANUAL operating modes

Table 76: Activate function monitoring

Hysteresis

You can use this parameter to set the hysteresis. You can use this to avoid the unnecessary generation of messages if the measured value fluctuates around a threshold value.

Delay time

You can use this parameter to set the delay time in order to delay the issuing of the event message.

9.22.7 Q bandwidth monitoring (optional)

The following limit values are monitored via bandwidth monitoring. The set bandwidth [▶Page 184] for reactive power regulation is used for this purpose.

- Upper bandwidth
- Lower bandwidth

You can set the following parameters for each limit value:

- Hysteresis limit value
- Delay time limit value

Behavior If the measured value is higher than the upper limit or lower than the lower limit, the device triggers the *Upper bandwidth limit value / Lower bandwidth limit value* message.

The "Function monitoring" function is used to detect long periods when values are above or below the bandwidth. Long periods when values are above or below the bandwidth indicate a problem with the device function because the device is not able to correct the control deviation.

If the value is above or below the set bandwidth [▶Page 184], the *Function monitoring* event is displayed after the set delay time for function monitoring has elapsed. The event is automatically acknowledged as soon as the measured value is back within the set bandwidth.

The following parameters are available for setting function monitoring:

- Function monitoring
- Hysteresis
- Delay time

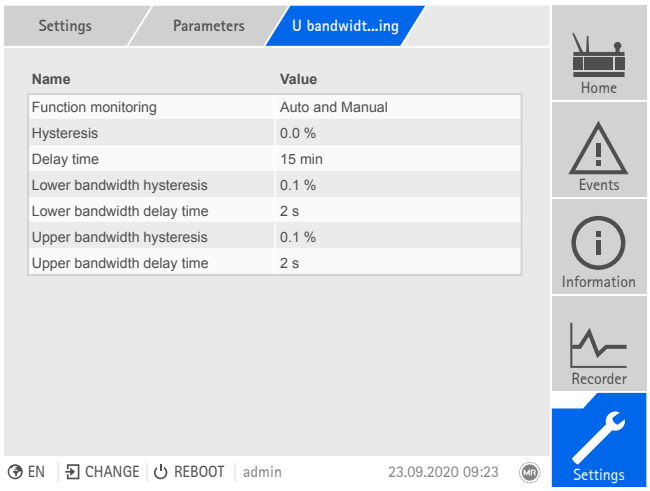

Figure 155: Q bandwidth monitoring

1. Go to **Settings > Parameters > On-load tap-changer regulator > Q bandwidth monitoring**.
2. Select the desired parameter.
3. Set the desired parameter.
4. Press the **Accept** button to save the modified parameter.

Function monitoring

You can use this parameter to activate function monitoring. You can select the following options:

Setting	Behavior
Off	Function monitoring is deactivated.
Only Auto	Function monitoring is only active in AVR AUTO operating mode.
Auto and Manual	Function monitoring is active in AVR AUTO and AVR MANUAL operating modes

Table 77: Activate function monitoring

Hysteresis

You can use this parameter to set the hysteresis. You can use this to avoid the unnecessary generation of messages if the measured value fluctuates around a threshold value.

Delay time

You can use this parameter to set the delay time in order to delay the issuing of the event message.

9.22.8 Phase symmetry monitoring

If you are measuring the voltage and current with the 3-phase UI 3 measuring module, you can set the maximum permitted differences for voltage and phase angle between the 3 phases. The difference is determined from the highest and lowest measured value of the 3 phases.

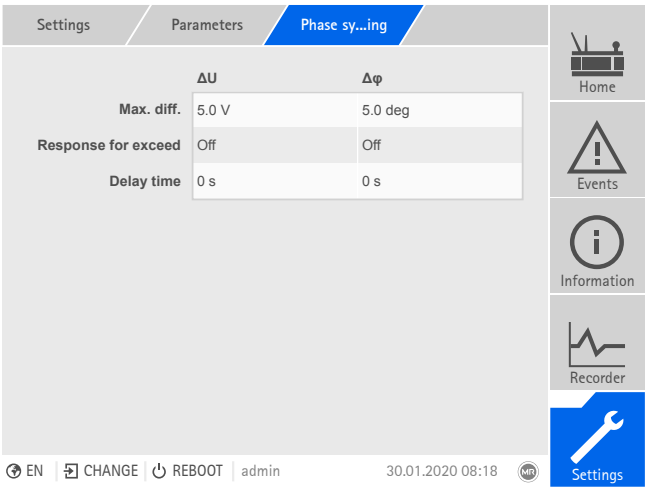

Figure 156: Phase symmetry monitoring

1. Go to **Settings > Parameters > Phase symmetry**.
2. Select the desired parameter.
3. Set the desired parameter.
4. Press the **Accept** button to save the modified parameter.

Maximum difference

You can use this parameter to specify a limit value for the voltage difference in V (in relation to the secondary value of the voltage transformer) or in kV (in relation to the primary value of the voltage transformer) or the phase angle difference.

Behavior

You can use this parameter to set the behavior of the device when the event message is issued. You can select the following options:

Setting	Behavior
Off	The limit value is not monitored.
Auto blocking	Automatic regulation is blocked. You can continue to perform tap-change operations in manual mode.
Auto/manual blocking	Automatic regulation is blocked. You **cannot** perform tap-change operations in manual mode.

Table 78: Behavior when an event message is issued

Delay time

You can use this parameter to set the delay time in order to delay the issuing of the event message.

9.22.9 Temperature monitoring

You can set different limit values for every measured/calculated temperature . If the measured temperature is greater than limit value > or >>, the device triggers an event message. If the measured temperature is less than limit value < or <<, the device triggers an event message.

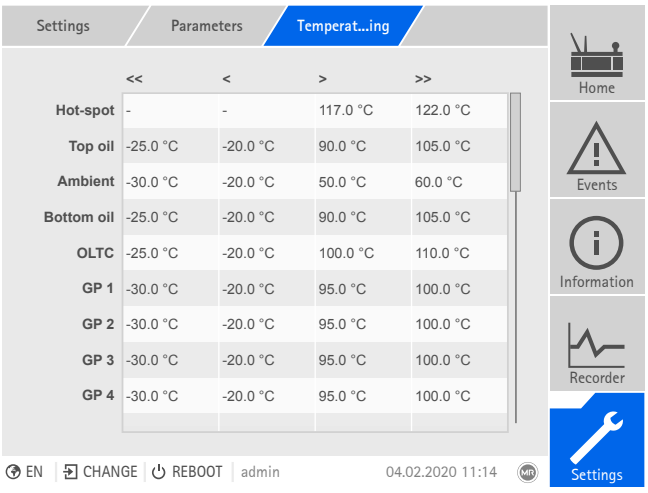

Figure 157: Temperature monitoring

1. Go to **Settings > Parameters > Temperature monitoring**.
2. Select the desired parameter.
3. Set the desired parameter.
4. Press the **Accept** button to save the modified parameter.

9.22.10 Monitoring the gas volume of the Buchholz relay (OLTC)

When you record the gas volume of the Buchholz relay of the on-load tap-changer, you can set 2 limit values for the gas volume. If the on-load tap-changer has multiple columns, you can set 2 limit values for each column. If the measured gas volume is greater than the limit value > or >>, the device triggers an event message.

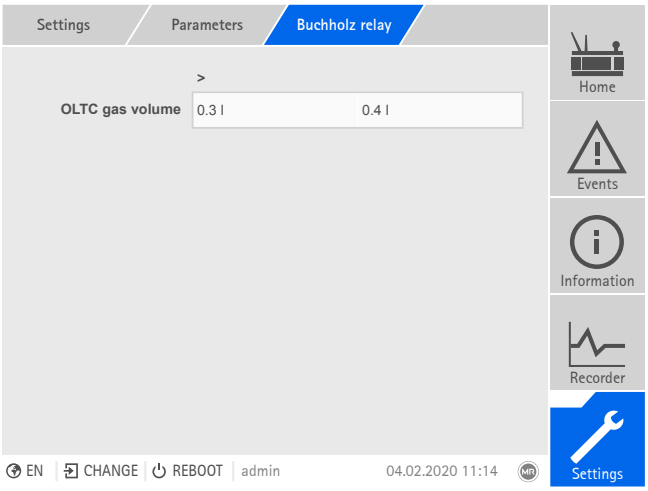

Figure 158: Limit values for the gas volume of the Buchholz relay of the on-load tap-changer

1. Go to **Settings > Parameters > On-load tap-changer > Buchholz relay**.
2. Select the desired parameter.
3. Set the desired parameter.
4. Press the **Accept** button to save the modified parameter.

9.22.11 Monitoring the gas volume of the Buchholz relay (transformer)

When you record the gas volume of the Buchholz relay of the transformer, you can set 2 limit values for the gas volume. If the measured gas volume is greater than the limit value > or >>, the device triggers an event message.

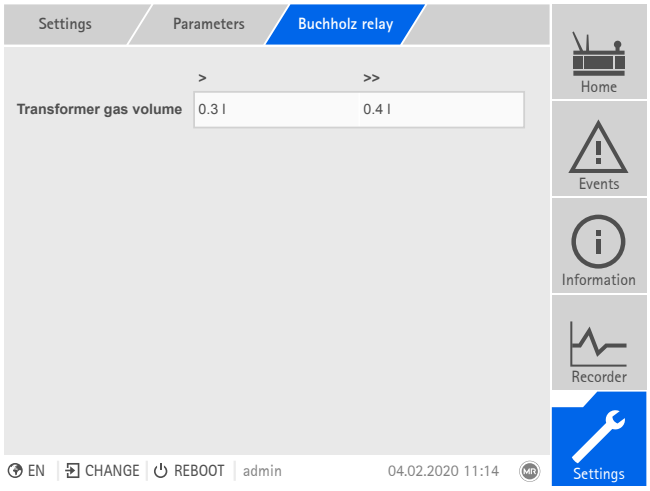

Figure 159: Limit values for the gas volume of the Buchholz relay of the transformer

1. Go to **Settings > Parameters > Active part > Buchholz relay**.
2. Select the desired parameter.
3. Set the desired parameter.
4. Press the **Accept** button to save the modified parameter.

9.22.12 Monitoring the oil pressure (transformer)

When you record the oil pressure of the transformer, you can use the pressure relief device (PRD) to set 2 limit values for the gas volume. If the measured oil pressure is greater than the limit value > or >>, the device triggers an event message.

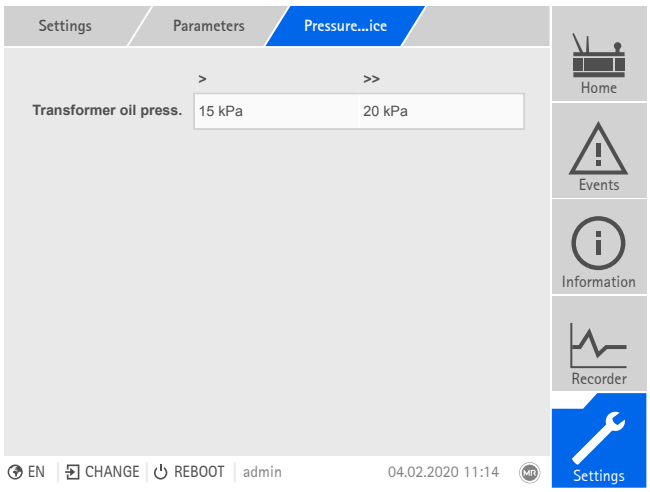

Figure 160: Limit values for the oil pressure of the transformer

1. Go to **Settings > Parameters > Active part > Pressure relief device**.
2. Select the desired parameter.
3. Set the desired parameter.
4. Press the **Accept** button to save the modified parameter.

9.22.13 Monitoring the oil pressure (on-load tap-changer)

When you record the oil pressure of the on-load tap-changer, you can use the pressure relief device (PRD) to set 2 limit values for the gas volume. If the on-load tap-changer has multiple columns, you can set 2 limit values for each column. If the measured oil pressure is greater than the limit value > or >>, the device triggers an event message.

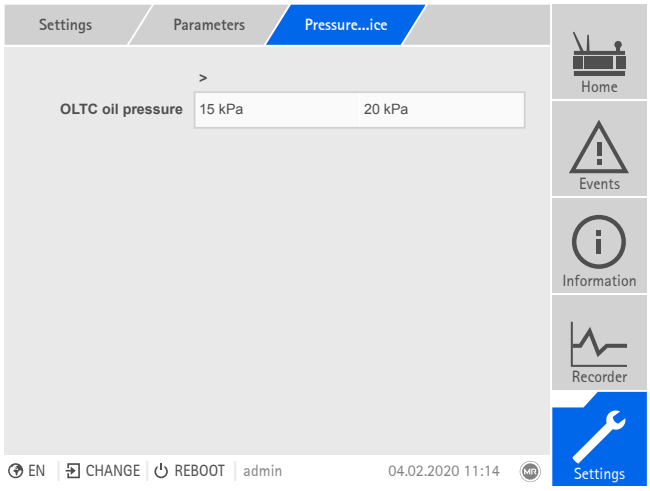

Figure 161: Limit values for the oil pressure of the on-load tap-changer

1. Go to **Settings > Parameters > (On-load tap-changer) > Pressure relief device**.
2. Select the desired parameter.
3. Set the desired parameter.
4. Press the **Accept** button to save the modified parameter.

9.23 Target-tap-position operation

When target-tap-position operation is activated, the device automatically switches to this target tap position.

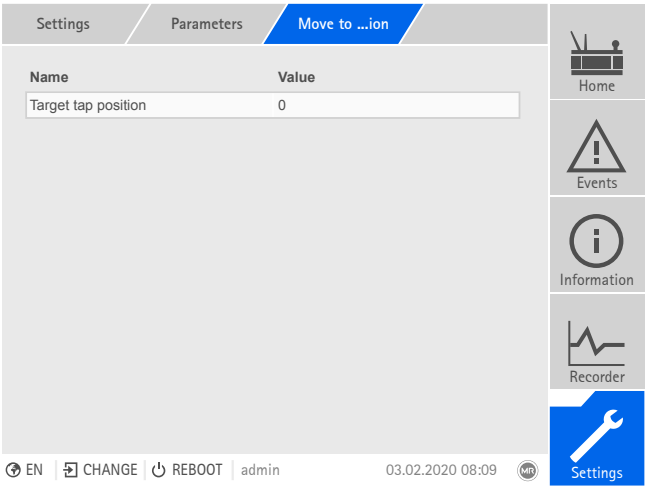

Figure 162: Move to the defined target tap position

1. Go to **Settings > Parameters > On-load tap-changer > Move to the defined target tap position**.
2. Select the desired parameter.
3. Set the desired parameter.
4. Press the **Accept** button to save the modified parameter.

Target tap position

You can use this parameter to define a target tap position.

9.24 Measured values

You can display the measured values for the device.

9.24.1 Displaying current measured values

The current measured values can be displayed on the measured value screen. Note that the displayed measured values may differ from the raw values displayed in the information display of the UI assembly. The measured values are prepared for the measured value display by the device as follows:

- The tap-change operation set for the current transformer and voltage transformer is taken into account, as is a corresponding phase displacement.
- The UI assemblies use the generator sign convention. The device displays the measured values using the load sign convention.

You can change the measured value display to the generator sign convention by activating the Retrofit TAPCON® 2xx [▶ Section 9.21.3, Page 223] parameter.

The following measured values are displayed:

- Voltage
- Current
- Power factor (cos ϕ)
- Frequency
- Reactive power
- Active power
- Apparent power

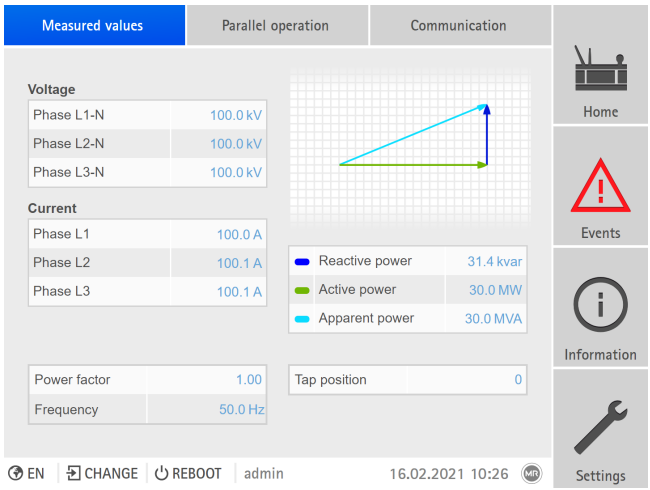

Figure 163: Measured values

▶ Go to **Information > Grid > Measured values**.

9.24.2 Displaying measured value recorder (optional)

You can use the optional measured value recorder function to display the progress of measured values and signals over time.

Depending on device configuration, you can select the following measured values and signals for the display:

Signal	Description
P_m L1	Active power L1 (average value)
P_m L2	Active power L2 (average value)
P_m L3	Active power L2 (average value)
P_m	Active power in total (average value)
S_m L1	Apparent power L1 (average value)
S_m L2	Apparent power L2 (average value)
S_m L3	Apparent power L3 (average value)
S_m	Apparent power in total (average value)
U_m Desired	Desired voltage value (average value)
f_m	Frequency (average value)
φ_m U1/I1	Phase angle U1/I1 (average value)
φ_m U2/I2	Phase angle U2/I2 (average value)
φ_m U3/I3	Phase angle U3/I3 (average value)
cos(φ_m) L1	Power factor L1 (average value)
cos(φ_m) L2	Power factor L2 (average value)
cos(φ_m) L3	Power factor L3 (average value)
cos(φ_m)	Power factor in total (average value)
I_m N	Neutral conductor current (average value)
I_m L1	Current L1 (average value)
I_m L2	Current L2 (average value)
I_m L3	Current L3 (average value)
U_m L1	Voltage L1 (average value)
U_m L2	Voltage L2 (average value)
U_m L3	Voltage L3 (average value)
Q_m L1	Reactive power L1 (average value)
Q_m L2	Reactive power L2 (average value)
Q_m L3	Reactive power L3 (average value)
Q_m	Total reactive power (average value)
Auto block	Auto mode blocked
HSR tap position ↓	High-speed return lower step
HSR tap position ↑	High-speed return raise step

Signal	Description
Req. HSR tap position ↓	High-speed return request lower step
Req. HSR tap position ↑	High-speed return request raise step
I>>	Limit value I>> exceeded
U>>	Limit value U>> exceeded
U Desired (prim.)	Desired voltage value (on primary side)
U Desired	Desired voltage value (on primary or secondary side, in accordance with configuration of measured value display parameter)
Tap position	Tap position
P L1	Active power L1
P L2	Active power L2
P L3	Active power L2
P	Active power in total
S L1	Apparent power L1
S L2	Apparent power L2
S L3	Apparent power L3
S	Apparent power in total
f	Frequency
φ U1/I1	Phase angle U1/I1
φ U2/I2	Phase angle U2/I2
φ U3/I3	Phase angle U3/I3
cos(φ) L1	Power factor L1
cos(φ) L2	Power factor L2
cos(φ) L3	Power factor L3
cos(φ)	Power factor in total
I N	Neutral conductor current
I L1	Current L1
I L2	Current L2
I L3	Current L3
U L1	Voltage L1
U L2	Voltage L2
U L3	Voltage L3
Q L1	Reactive power L1
Q L2	Reactive power L2
Q L3	Reactive power L3
Q	Total reactive power

Signal	Description
t motor	Motor runtime
Q1 Off	Motor protective switch triggered
Par. grp. 1	Parallel operation group 1 active
Par. grp. 2	Parallel operation group 2 active

Table 79: Measured values and signals

If you call up the measured value recorder directly on the device display, you can select a maximum of 3 measured values. If you access it via the web visualization, you can select a maximum of 10 measured values.

To display the measured value recorder, proceed as follows:

1. Go to **Recorder**.

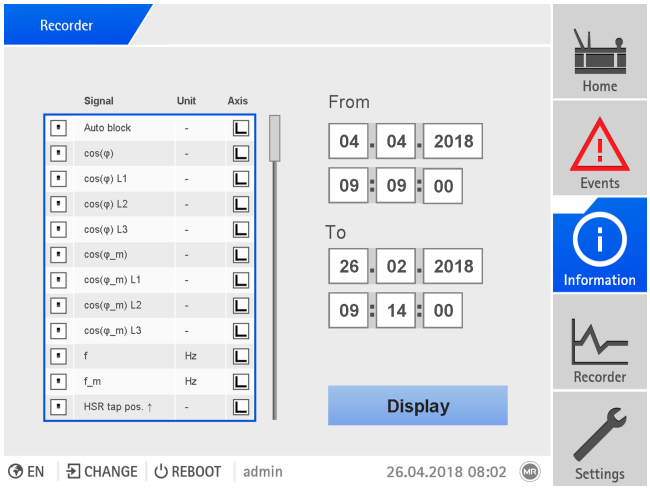

Figure 164: Recorder

2. Select the signals to be displayed in the **list**.
3. If necessary, set the desired **axis** for each signal.
4. Enter the **start time** and **end time** for the measured value display.

5. Press **Display** to call up the measured value display (data log).

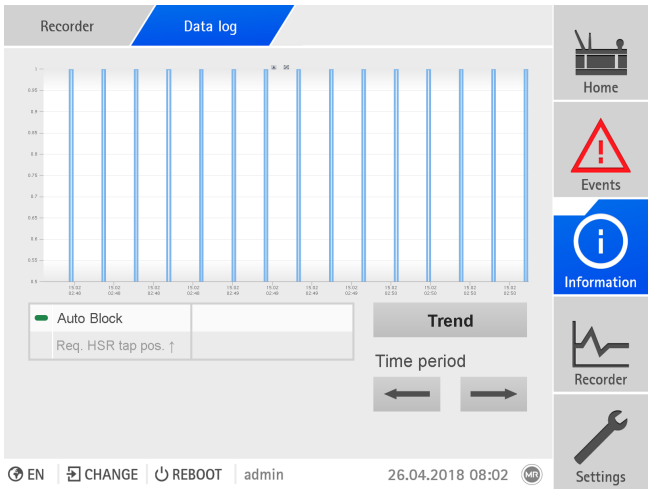

Figure 165: Data log

The operation described below is only possible if you access the visualization using a computer.

6. Move the mouse pointer to a **measurement point** for more information.
7. Use the mouse to drag a selection window in order to zoom into the diagram. Select the button to reduce the diagram back to its original size.
8. Select the button to save the displayed measured values as a csv file.

Trend curves

If you call up the measured value recorder using a PC, you can display a trend curve instead of the measured values. The trend curve can, for example, be a moving average over a configurable time period.

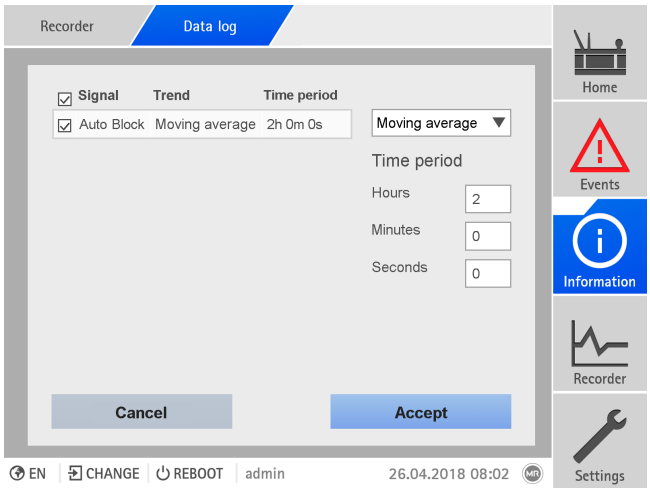

Figure 166: Creating trend curves

To create the trend curves, proceed as follows:

1. Call up the measurement recorder and the desired measured value series.
2. Press the **Trend** button.
3. Select the desired **measured values**.
4. Select the desired **trend function**.
5. Entire the desired **time period** for the calculation of the trend curve.
6. Press the **Accept** button to display the trend curves.

⇨ The trend curve is displayed. Measured values that are displayed as trend curves are marked with the symbol.

9.24.3 Setting the measured value recorder

The measured value recorder records a maximum of 500,000 values per measured variable. Depending on the set average value interval, the measured value recorder can display the measured values over a shorter or longer time period:

- Average value interval = 1 s: approx. 6 days
- Average value interval = 86400 s (= 24 h): approx. 1340 years

Note that, for measured values via analog input signals (e.g. temperature), a maximum of 100,000 measured values with an average value interval of 3,600 s (= 1 h) will be saved. This is equivalent to a time period of approx. 11 years.

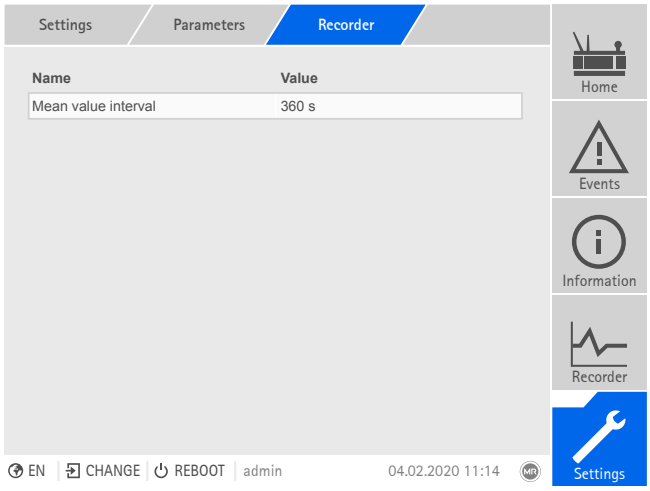

Figure 167: Recorder

1. Go to **Settings > Parameters > System > Recorder**.
2. Select the desired parameter.
3. Set the parameter.
4. Press the **Accept** button to save the modified parameter.

Average value interval

You can use this parameter to set the average value interval of the measured value recorder for electrical measured variables (current, voltage, phase angle etc.).

9.24.4 Displaying temperature curve (optional)

You can display the temporal progression of the temperatures measured over the last 10 days.

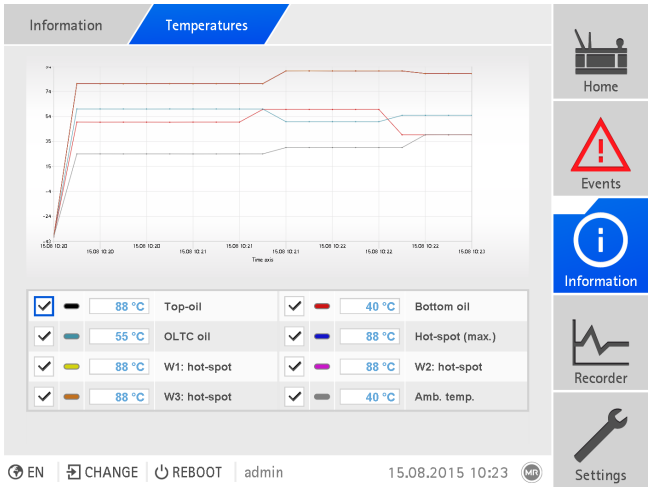

Figure 168: Temperature curve

► Go to **Information > Active part > Temperatures**.

Generic temperatures

If you are using additional temperature sensors (generic temperature 1...8), you can display the temperature curve for these temperatures over the last 10 days.

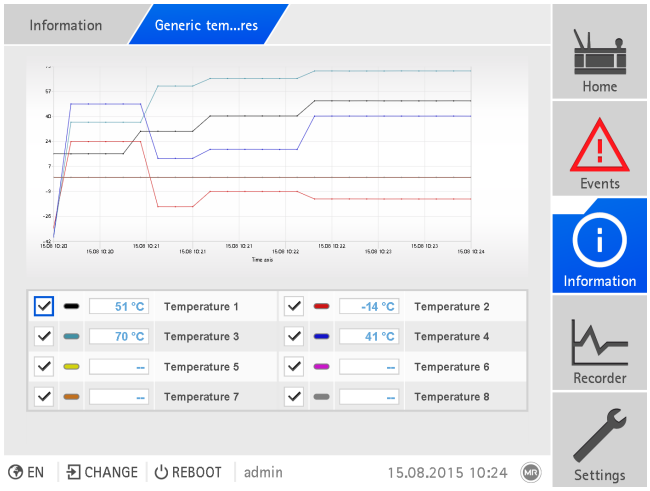

Figure 169: Generic temperatures

► Go to **Information > System > Gener. temperatures**.

9.24.5 Displaying winding temperatures (optional)

If you record the winding temperatures with a sensor, you can display the temporal progression of the measured winding temperatures over the last 10 days. To do so, proceed as follows:

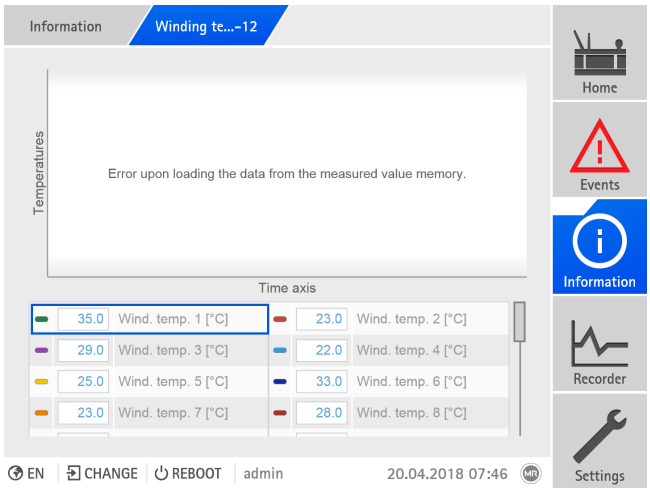

Figure 170: Winding temperature

► Go to **Information > Active part > Winding temperature 1-12/13-24**.

As an option, you can also display the measured value trend over a time period that you define (max. the last 10 days). You will find more information on this in the section "Measured value recorder" [▶ Section 9.24.2, Page 246].

9.24.6 Displaying the measured values of the Buchholz relay (optional)

You can display the temporal progression of the measured values of the Buchholz relay over the last 10 days.

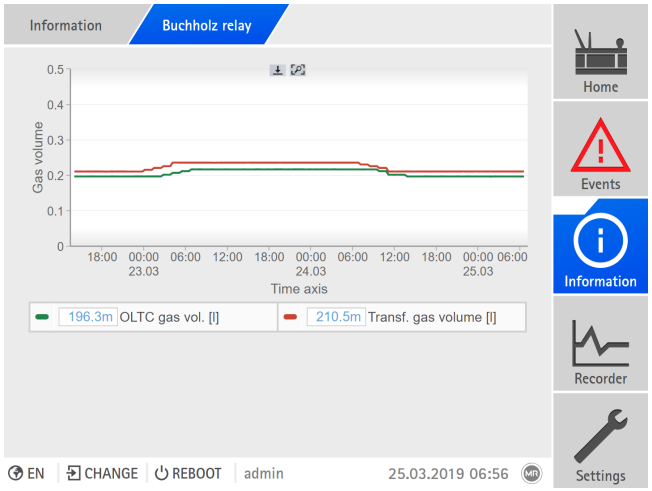

Figure 171: Measured value trend of the Buchholz relay

► Go to **Information > Protective devices > Buchholz relay**.

9.24.7 Displaying the measured values of the pressure relief device (optional)

You can display the temporal progression of the measured values of the pressure relief device (PRD) over the last 10 days.

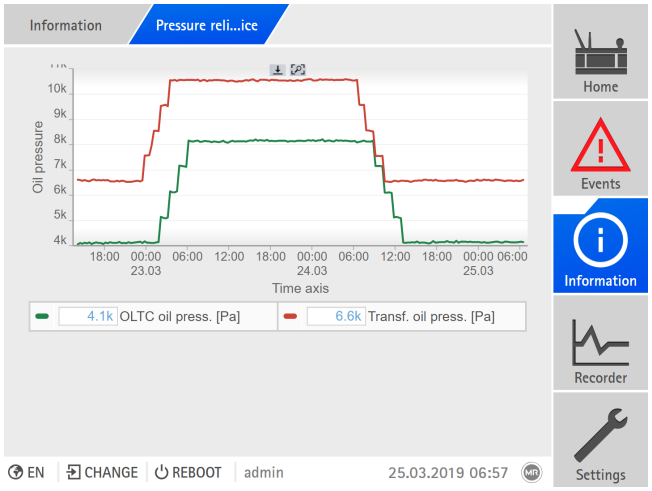

Figure 172: Measured value trend of the pressure relief device

► Go to **Information > Protective devices > Pressure relief device**.

9.24.8 Displaying the measured value trend of the oil level and dehydrating breather (optional)

You can display the temporal progression of the oil level and the measured values of the dehydrating breather over the last 10 days. To do so, proceed as follows:

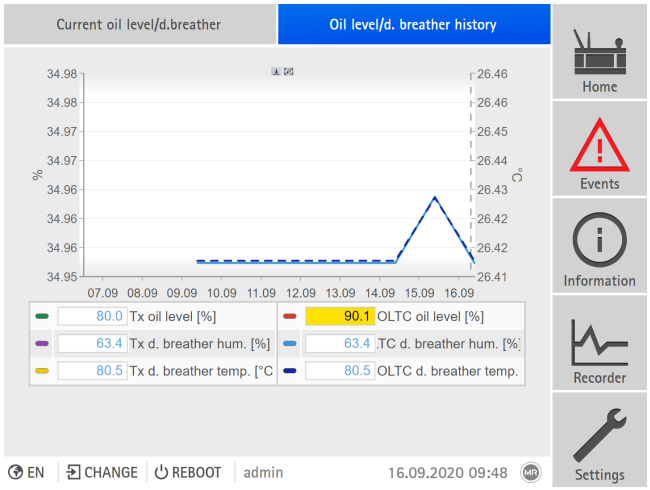

Figure 173: Measured value trend of the oil level and the dehydrating breather measured values

► Go to **Information > Insulating fluids > Historic oil level/dehydrating breather**.

9.25 On-load tap-changer monitoring

9.25.1 Changing tap position designation (optional)

This function allows you edit the designation of the tap position. The designations are displayed on the main screen when each of the tap positions is active and are used for the control system.

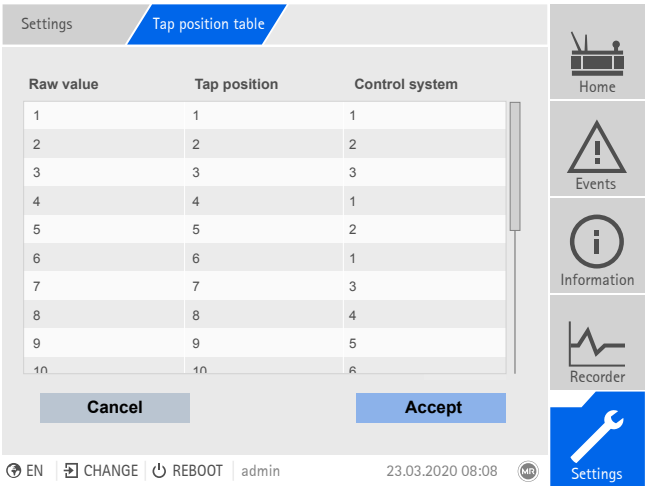

Figure 174: Tap position table

1. Go to **Settings > Tap position table**.
2. Enter the designation for the tap position and for the control system.
3. Click on the **Accept** button.

9.25.2 Setting the TCR calculation factor (optional)

If you only measure the voltage and current on the high-voltage side of the transformer, you can set the TCR (Transformer Current Rating) calculation factor for each tap position of the on-load tap-changer using this function. The device uses this calculation factor to calculate the current on the low-voltage side depending on the current tap position.

The TCR calculation factor is defined as the ratio of the current on the low-voltage side (I_{LV}) to the high-voltage side (I_{HV}):

$$TCR = \frac{I_{LV}}{I_{HV}}$$

You must enter the calculation factor for each tap position. If you enter the value 0 for a tap position, a calculation will not be performed for this tap position and the device will not display a value for the current on the low-voltage side.

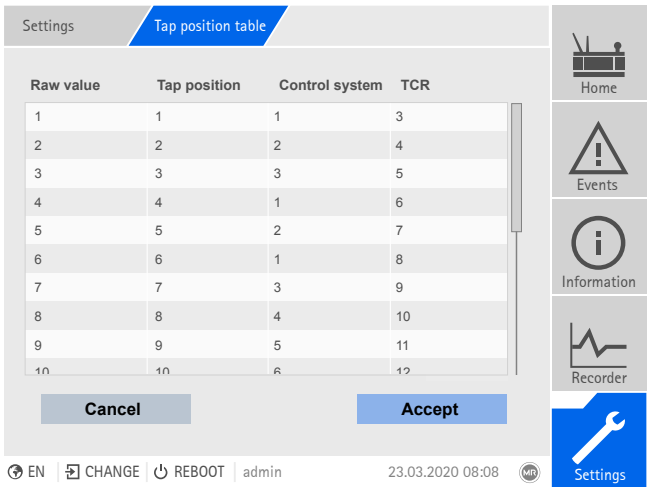

Figure 175: Tap position table

1. Go to **Settings > Tap position table**.
2. Enter the calculation factor for each tap position.
3. Press the **Accept** button to save the modified parameter.

9.25.3 Displaying tap-change operation statistics (optional)

In the switching statistics view, you can display how often the on-load tap-changer has been switched to a particular tap position and how long it has remained in a particular tap position.

The top diagram shows how often the on-load tap-changer was switched into a particular tap position and how long it spent there. The bottom diagram shows the time spent in the tap positions over the last 10 days.

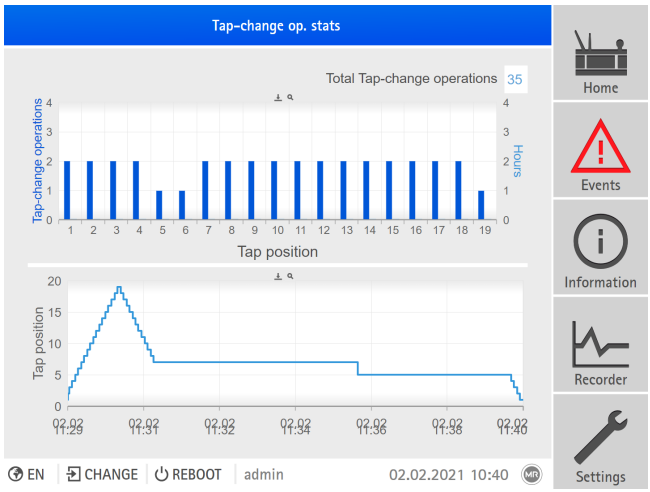

Figure 176: Tap-change operation statistics

► Go to **Information > On-load tap-changer > Tap-change operation statistics**.

9.25.4 Motor Current Index (MCI)

The term Motor Current Index (in accordance with IEEE PC57.143) describes the area below the curve of the motor current during an on-load tap-change operation. The Motor Current Index is a measurement that takes into account the inrush current, the present tap-change conditions and the tap-change duration.

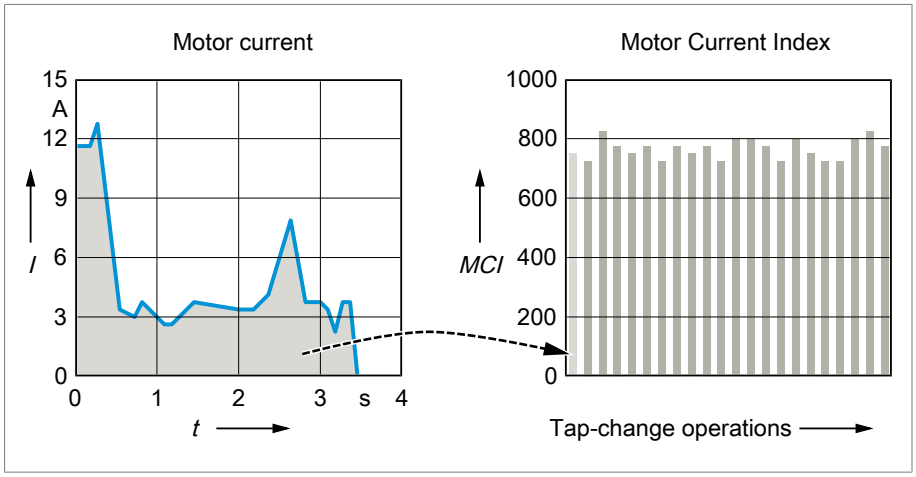

Figure 177: Example illustration of the temporal progression of the motor current *I* and of the Motor Current Index *MCI* calculated from this in comparison with the values of the *MCI* for further on-load tap-change operations

The motor runtime and therefore the Motor Current Index differ depending on the type of tap-change operation. The Motor Current Index will therefore be categorized in accordance with the following types of tap-change operation to aid comparison:

Tap-change operation type	Description
TSO/CSO Tap selector operation / change-over selector operation	The switching direction is the same as the previous switching direction. Example: ▪ Previous tap-change operation: pos. 2 → pos. 3 ▪ Current tap-change operation: pos. 3 → pos. 4
RSO Reverse tap-change operation	The switching direction is not the same as the previous switching direction. Example: ▪ Previous tap-change operation: pos. 2 → pos. 3 ▪ Current tap-change operation: pos. 3 → pos. 2
Unknown	The tap-change operation type is unknown. This is the case after the device has been restarted or if the motor protective switch has been triggered.

Table 80: Tap-change operation types

For the correct determination of the Motor Current Index, you must use a signaling module for the tap position that also signals the pass-through position as a separate tap position.

9.25.4.1 Setting MCI monitoring

The device can monitor the Motor Current Index (MCI) and trigger an event message if the Motor Current Index is outside of the permissible range. If you would like to monitor the Motor Current Index, you must set the following parameters.

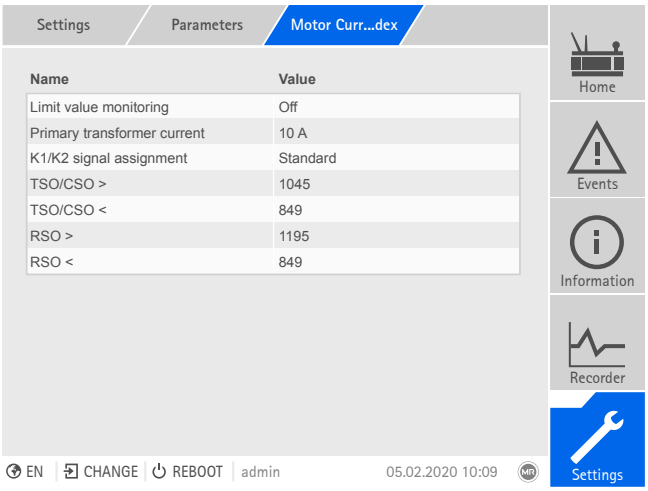

Figure 178: Motor Current Index

1. Go to **Settings > Parameters > Motor-drive unit > Motor Current Index**.
2. Select the desired parameter.
3. Set the desired parameter.
4. Press the **Accept** button to save the modified parameter.

Determining the limit values

Upon delivery, the limit values have not been determined. Maschinenfabrik Reinhausen GmbH recommends the following procedure for determining the limit values:

1. When commissioning the product, deactivate limit value monitoring.
2. After one year, display the minimum and maximum values of the Motor Current Index (MCI extreme values [▶Section 9.25.4.2, Page 259]).
3. Use the maximum value of the MCI + 20% for the upper limit value, and the minimum value of the MCI - 20% for the lower limit value.
4. Repeat this procedure annually, and then reset the MCI extreme values.

9.25.4.2 Displaying the MCI

You can display the progression and the extreme values of the Motor Current Index.

MCI values

In the MCI values menu, you can display the Motor Current Index recorded values and the corresponding tap position of the last 3000 tap-change operations. The following buttons are available for navigation within the diagram:

- : Call up first page.
- : Call up previous page.
- : Call up next page.
- : Call up last page.
- : Update the display.

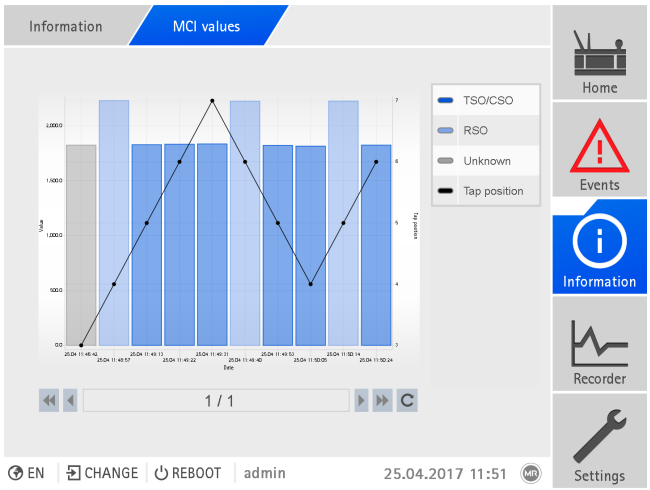

Figure 179: MCI values

1. Go to **Information > On-load tap-changer > MCI values**.
2. Where necessary, select the navigation buttons to change pages.

MCI extreme values

In the MCI extreme values menu, you can display the maximum and minimum values of the Motor Current Index and the corresponding dates.

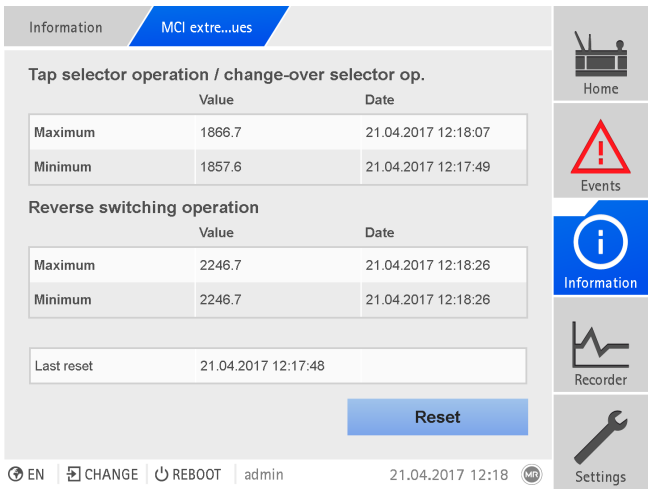

Figure 180: MCI extreme values

1. Go to **Information > On-load tap-changer > MCI extreme values**.
2. Where necessary, select the **Reset** button to clear the displayed extreme values.

Measured value recorder (optional)

You can display the values of the Motor Current Index in the measured value recorder if the device has the measured value recorder option. You will find more information in the section Display measured value recorder [▶ Section 9.24.2, Page 246].

Note that the tap-change operation type is displayed as follows:

- 0: Unknown tap-change operation type
- 1: Tap selector operation / change-over selector operation (TSO/CSO)
- 2: Reverse tap-change operation (RSO)

9.25.5 Displaying information about contact wear (only OILTAP®)

If you are monitoring an on-load tap-changer of type OILTAP®, you can display the current wear values of the main switching contacts (MSCA, MSCB) and transition contacts (TCA, TCB).

The device also shows the differences in contact wear for different contacts.

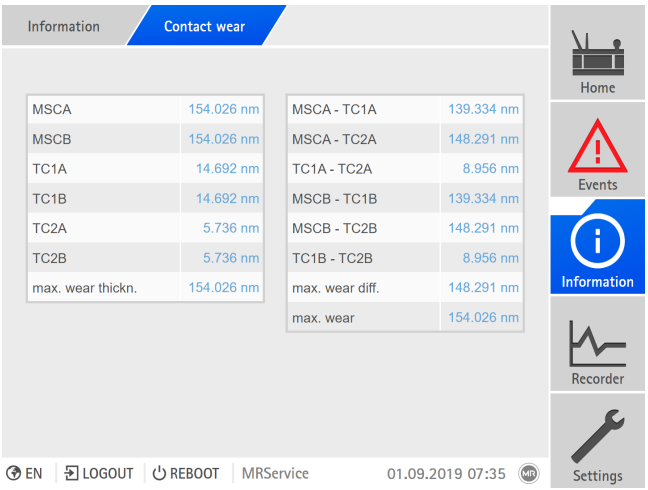

Figure 181: Contact wear

► Go to **Information > On-load tap-changer > Contact wear**.

9.25.6 Configuring OLTC PreCheck

The OLTC PreCheck function is used to prevent damage on the on-load tap-changer by on-load tap-changer operations under unauthorized operating conditions. OLTC PreCheck monitors compliance with the following limit values for this purpose:

- Overcurrent I>>
- Oil level OLTC >> and oil level OLTC << (optional)
- Oil temperature >> (optional)

If a measured value is greater than the limit value, the OLTC PreCheck prevents an on-load tap-changer operation from taking place. OLTC PreCheck blocks both manual tap position commands (S3 control switch, digital inputs, SCADA) and automatic voltage regulation. The status of OLTC-PreCheck is displayed in the "Information > Drive [►Section 9.12, Page 167]" display.

You can set the following parameters for the OLTC PreCheck:

- Activate OLTC PreCheck
- Limit values
  - Oil level (optional)
  - Oil temperature (optional)
  - Overcurrent I>>

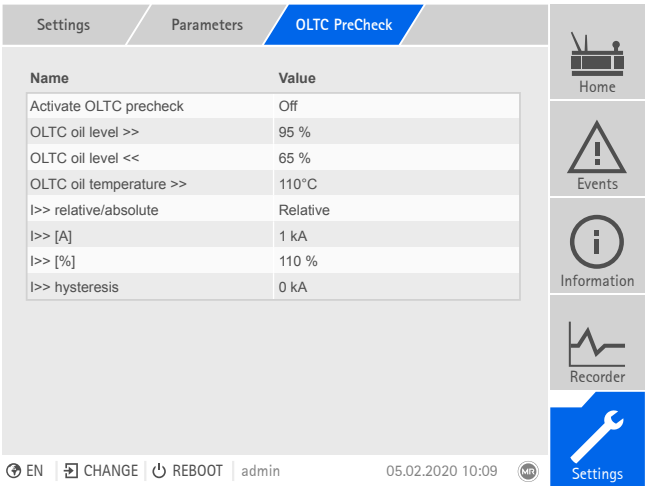

Figure 182: Configuring OLTC PreCheck

To configure OLTC PreCheck, proceed as follows:

1. Go to **Settings > Parameters > OLTC PreCheck**.
2. Select the parameter you want.
3. Set parameter.
4. Press the **Accept** button to save the modified parameter.

9.25.7 Information about the on-load tap-changer

Under "OLTC" you can display information about the on-load tap-changer:

- Current tap position
- Total tap-change operations (operations counter)

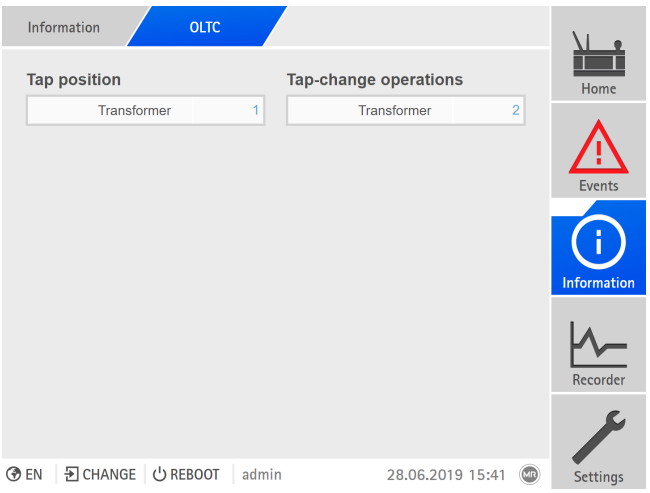

Figure 183: OLTC

► Go to **Information > On-load tap-changer > OLTC**.

9.26 Transformer monitoring (optional)

9.26.1 Hot-spot calculation (optional)

You can set the parameters for the hot-spot calculation in the Hot-spot menu. If you use the device in the version with a winding temperature sensor, then you can also select whether the hot-spot is to be measured or calculated.

Hot-spot measurement

Hot-spot measurement requires that you connect [▶Section 9.28, Page 279] a sensor for recording the winding temperature to the device via an MR sensor bus and link [▶Section 9.29, Page 290] the transmitted data points to the function of the analog input (winding temperature 1...24).

Hot-spot calculation

The device can calculate the hot-spot in accordance with the thermal models of the standards IEC 60076-7 and IEEE Std C57.91. To enable this, you must set the calculation parameters.

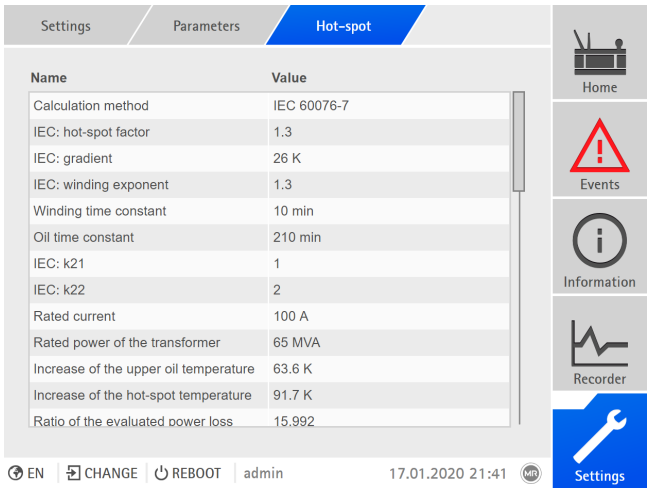

Figure 184: Hot-spot calculation

If you use the optional function "Hot-spot calculation on 3 different windings (W1, W2, W3)", you must set the parameters "IEC: Gradient", "IEEE: Gradient", "IEC: Hot-spot factor" and "Nominal current" for W1, W2 and W3 respectively.

If you are using a cooling system, you also need to enter the calculation parameters for each cooling stage in the menu under "CS x hot-spot".

If you are to control a cooling system with the optional Frequency-based cooling system control [▶ Section 9.10.7, Page 155] function, you must set the calculation parameters for both the minimum fan speed and the maximum fan speed. The device interpolates the values of the parameters between the two operating points.

1. Go to **Settings > Parameters > Active part > Hot-spot**.
2. Select the desired parameter.
3. Set the parameter.
4. Press the **Accept** button to save the modified parameter.

Hot-spot determination

You can use this parameter to set how the device is to determine the hot-spot temperature. You can select the following options:

- Hot-spot measurement
- Hot-spot calculation

Calculation method

You can use this parameter to set which method the device is to use to calculate the hot-spot temperature:

- IEC 60076-7
- IEEE Std C57.91

Depending on the calculation method, you have to set various additional calculation parameters.

IEC: hot-spot factor

You can use this parameter to set the hot-spot factor for calculating the hot-spot temperature in accordance with IEC 60076-7.

IEC: gradient

You can use this parameter to set the gradients for calculating the hot-spot temperature in accordance with IEC 60076-7.

IEC: winding exponent

You can use this parameter to set the winding exponents for calculating the hot-spot temperature in accordance with IEC 60076-7.

IEC: oil time constant

You can use this parameter to set the oil time constant for calculating the hot-spot temperature in accordance with IEC 60076-7.

IEC: k21

You can use this parameter to set the thermal model constant k21 for calculating the hot-spot temperature in accordance with IEC 60076-7.

IEC: k22

You can use this parameter to set the thermal model constant k22 for calculating the hot-spot temperature in accordance with IEC 60076-7.

IEEE: gradient

You can use this parameter to set the gradients for calculating the hot-spot temperature in accordance with IEEE Std C57.91.

IEEE: exponent

You can use this parameter to set the exponents for calculating the hot-spot temperature in accordance with IEEE Std C57.91.

Nominal current

You can use this parameter to set the nominal current of the transformer for calculating the hot-spot temperature in accordance with IEC 60076-7 or IEEE Std C57.91.

Winding time constant

You can use this parameter to set the winding time constant for calculating the hot-spot temperature in accordance with IEC 60076-7 or IEEE Std C57.91.

IEEE: Oil exponent

You can use this parameter to set the oil exponent of the transformer in accordance with IEEE Std C57.91.

Rated power of the transformer

You can use this parameter to set the rated power of the transformer. This parameter is used for calculating the actual power based on the determined load factor.

Increase of the upper oil temperature

You can use this parameter to set the increase of the upper oil temperature above ambient temperature (at rated load). The value to be set depends on the design of your transformer.

Increase of the hot-spot temperature

You can use this parameter to set the increase of the hot-spot temperature above ambient temperature in accordance with IEEE Std C57.91. The value to be set depends on the design of your transformer.

Ratio of the evaluated power loss

You can use this parameter to set the ratio of the power losses at rated current to the idling losses of the transformer. The value to be set depends on the design of your transformer.

9.26.2 Hot-spot forecast (optional)

You can use the optional hot-spot forecast to calculate the hot-spot temperature based on load profile and ambient temperature for a 24-hour time period. The calculation can either be made in accordance with IEC 60076-7 or IEEE Std C57.91 (Clause 7 model). The diagram also shows you the load factor and the relative aging rate of the transformer.

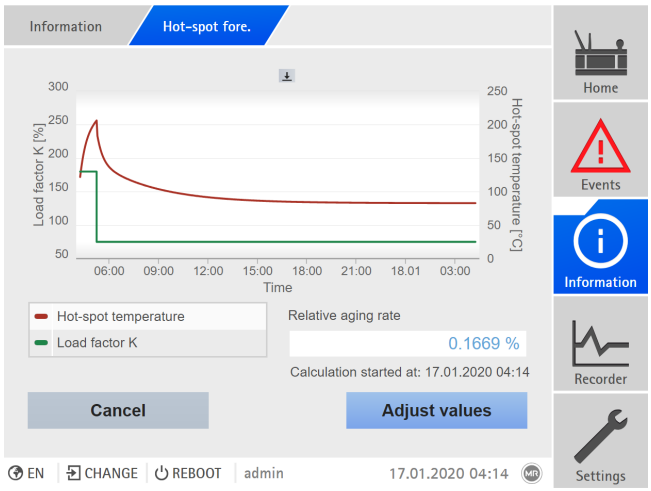

Figure 185: Hot-spot forecast

For the hot-spot forecast calculation, you must enter the desired values for load factor and ambient temperature for every hour. The device uses the currently measured values as the starting values. The remaining values are pre-populated with the measured values from the previous day. If no measured values are available, the device uses the factory setting.

If you call up the visualization using a PC, you can export the calculated values as a csv file.

To be able to use the hot-spot forecast, you must first set the parameters for the following functions:

- Hot-spot calculation [▶Section 9.26.1, Page 264]
- Dynamic Transformer Rating [▶Section 9.32.1, Page 305]

1. Go to **Information > Active part > Forecast values**.
2. Enter the desired values for **ambient temperature** and **load factor**.

3. Press the **Start calculation** button.
   ⇨ The diagram appears.
4. Optional: Press ⬇ to save the calculated values as a csv file.
5. If required, press **Adjust values** to make changes to the entered values.

9.26.3 Setting calculation of transformer's loss of life (optional)

In order to calculate the transformer's loss-of-life, you need to set the following parameters.

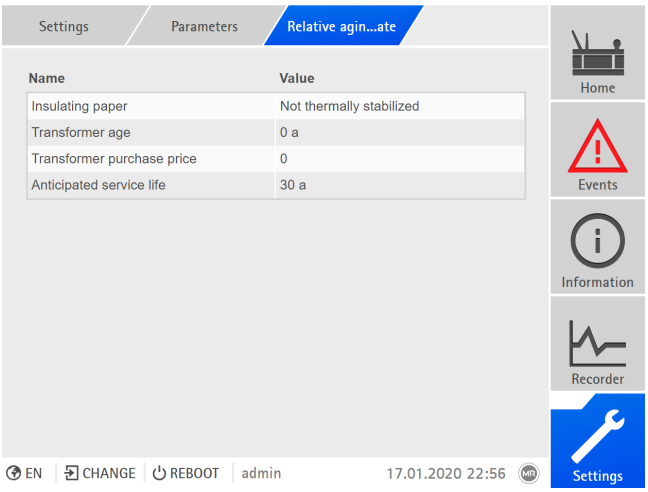

Figure 186: Relative loss-of-life

1. Go to **Settings > Parameters > Active part > Rel. loss-of-life**.
2. Select the desired parameter.
3. Set the parameter.
4. Press the **Accept** button to save the modified parameter.

IEC: Insulating paper

You can use this parameter to set whether the transformer is equipped with thermally stabilized insulation paper or not. This parameter is used to calculate the relative aging rate and is only relevant if you calculate the hot-spot temperature in accordance with IEC 60076-7.

Transformer age

You can use this parameter to set the current age of the transformer in years. This parameter is used to calculate the loss of life.

Transformer purchase price

This parameter can be used to set the purchase price of the transformer.

Anticipated service life

You can use this parameter to set the anticipated service life of the transformer in years. This parameter is used to calculate the loss of life.

9.26.4 Displaying protective device status (optional)

The overview display shows you the current status of the connected protective devices.

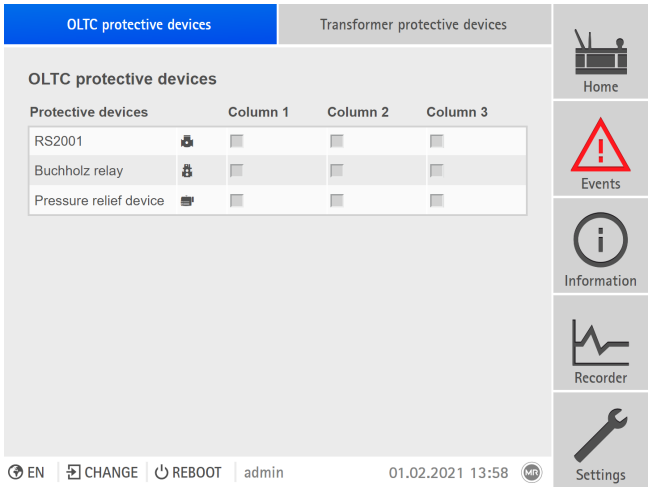

Figure 187: Overview display of the status of the protective devices

► Go to **Information > Protective devices > Protective devices status > Buchholz relay**.

9.27 Dissolved gas analysis (optional)

You can use the optional function "Dissolved gas analysis" (DGA) to monitor the gas content and the moisture in the transformer oil. Depending on the device configuration, the device records the measured values from the sensors either as analog signals (4...20 mA) or MR sensor bus. For the configuration of the sensors, refer to sections "Configuring analog inputs and outputs" [▶Section 9.29, Page 290] and "MR sensor bus" [▶Section 9.28, Page 279].

The values determined and calculated using the function "Dissolved gas analysis" can exhibit measuring inaccuracies that arise from the measuring inaccuracies of the sensors. Therefore, refer to the sensor operating instructions for further information on the measuring accuracy and any necessary calibration.

Depending on the device configuration, the dissolved gas analysis includes the following sub-functions:

- Display of the absolute values
- Display of the rates of increase
- Display of the measured value trend
- Additional, as an option:
  - Duval analysis
  - Rogers analysis
  - Dörnenburg analysis
  - IEC 60599 analysis

9.27.1 Configuring DGA monitoring

For the DGA monitoring "DGA", you can set 3 limit values for the absolute values and for the rates of increase. Depending on the device configuration, you can monitor up to 11 DGA signals. You can also set the following parameters:

- Sensor measuring accuracy
- Reset diagnostic errors
- Rates of increase evaluation interval
- Relative moisture in oil default value
- Use relative moisture in oil default value

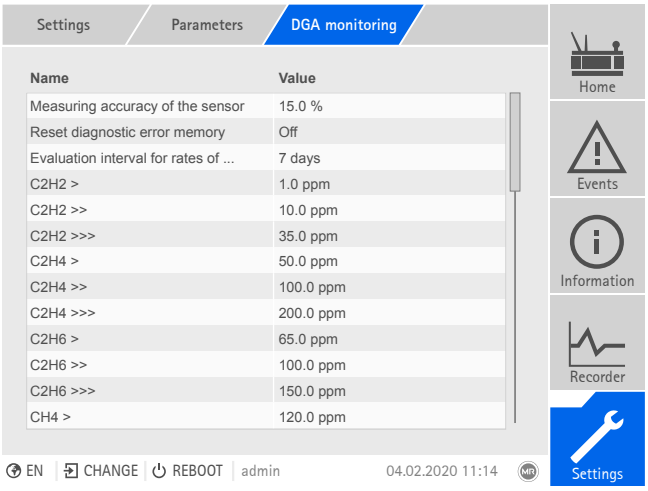

Figure 188: Configuring DGA monitoring

To set the DGA monitoring, proceed as follows:

1. Go to **Settings > Parameters > DGA monitoring**.
2. Select the desired parameter.
3. Set the parameter.
4. Press the **Accept** button to save the modified parameter.

Sensor measuring accuracy

You can use this parameter to enter the sensor measuring accuracy as a percentage value. When doing so, refer to the sensor operating instructions.

Reset diagnostic errors

This parameter can be used to reset the recorded diagnostic errors for all dissolved gas analyses. This can be useful after a transformer oil change, for example.

Rates of increase evaluation interval

You can use this parameter to set the interval for the rate of increase which is used as the basis for the limit value consideration.

Relative moisture in oil default value

You can use this parameter to enter a value for the transformer moisture in oil (e.g. from the last oil analysis). This value can be used as a replacement value if the transformer is not equipped with a sensor for measuring the moisture in oil, or if the sensor is defective.

Use relative moisture in oil default value

You can use this parameter to activate the replacement value for the relative moisture in oil. The device will then use the replacement value in all calculations that use the transformer moisture in oil level. Be aware that these cal-

culations may be less accurate when you use the replacement value and that the replacement value deviates from the actual value of the transformer moisture in oil.

Limit values for absolute values

Gas	Parameters		
	Limit 1	Limit 2	Limit 3
H2O (%)	H2O>	H2O>>	H2O>>>
H2 (ppm)	H2>	H2>>	H2>>>
N2 (ppm)	N2<	N2<<	N2<<<
CO (ppm)	CO>	CO>>	CO>>>
CO2 (ppm)	CO2>	CO2>>	CO2>>>
CH4 (ppm)	CH4>	CH4>>	CH4>>>
C2H2 (ppm)	C2H2>	C2H2>>	C2H2>>>
C2H4 (ppm)	C2H4>	C2H4>>	C2H4>>>
C2H6 (ppm)	C2H6>	C2H6>>	C2H6>>>
O2 (ppm)	O2<	O2<<	O2<<<
TDCG (ppm)	TDCG>	TDCG>>	TDCG>>>

Table 81: Limit values for the absolute values

Limit values for rates of increase

Gas	Parameters		
	Limit 1	Limit 2	Limit 3
H2O (%/d)	H2O rate of increase>	H2O rate of increase>>	H2O rate of increase>>>
H2 (ppm/d)	H2 rate of increase>	H2 rate of increase>>	H2 rate of increase>>>
N2 (ppm/d)	N2 rate of increase<	N2 rate of increase<<	N2 rate of increase<<<
CO (ppm/d)	CO rate of increase>	CO rate of increase>>	CO rate of increase>>>
CO2 (ppm/d)	CO2 rate of increase>	CO2 rate of increase>>	CO2 rate of increase>>>
CH4 (ppm/d)	CH4 rate of increase>	CH4 rate of increase>>	CH4 rate of increase>>>
C2H2 (ppm/d)	C2H2 rate of increase>	C2H2 rate of increase>>	C2H2 rate of increase>>>
C2H4 (ppm/d)	C2H4 rate of increase>	C2H4 rate of increase>>	C2H4 rate of increase>>>
C2H6 (ppm/d)	C2H6 rate of increase>	C2H6 rate of increase>>	C2H6 rate of increase>>>

Gas	Parameters		
	Limit 1	Limit 2	Limit 3
O2 (ppm/d)	O2 rate of increase<	O2 rate of increase<<	O2 rate of increase<<<
TDCG (ppm/d)	TDCG rate of increase>	TDCG rate of increase>>	TDCG rate of increase>>>

Table 82: Limit values for the rates of increase

9.27.2 Displaying measured values

The overview screen displays the current status of the dissolved gas analysis.

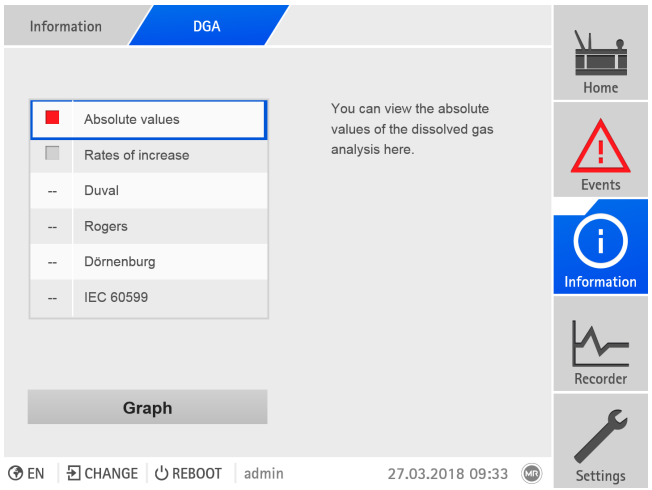

Figure 189: Overview screen

Depending on the analysis method, the following status values are displayed:

Value	Description
Gray	Limit value not exceeded
Yellow	Yellow limit exceeded
Red	Red limit exceeded

Table 83: Status values for absolute values and rates of increase

Value	Description	Duv.	Rog.	Dörn.	IEC
--	Analysis not possible	+	+	+	+
N	Normal operation	-	+	-	-
D1	Discharge of low energy	+	+	-	+
D2	Discharge of high energy	+	+	+	+
D1/D2	Discharge of low/high energy	-	-	-	+
T1	Thermal fault <300 °C	+	+	-	+

Value	Description	Duv.	Rog.	Dörn.	IEC
T2	Thermal fault 300...700 °C	+	+	-	+
T3	Thermal fault >700 °C	+	+	-	+
PD	Partial discharge	+	-	+	+
TD	Mixed thermal/electrical fault	+	-	-	-
T1-T3	Thermal decomposition	-	-	+	-

Table 84: Status values for the Duval, Rogers, Dörnenburg and IEC 60599 analyses

For the Duval, Rogers, Dörnenburg and IEC 60599 analyses, the values measured by the sensor have to exceed the following detection limits. If the measured values are less than the detection limit, the device will use the detection limit value for the calculation.

Gas	Detection limit
H_2	50 ppm
CH_4	10 ppm
C_2H_2	10 ppm
C_2H_4	10 ppm
C_2H_6	10 ppm

Table 85: Detection limits

9.27.2.1 Absolute values

You can display the current absolute measured values of the sensors. Furthermore, a bar chart shows a graphical representation of the measured value and the set limit values (yellow, red).

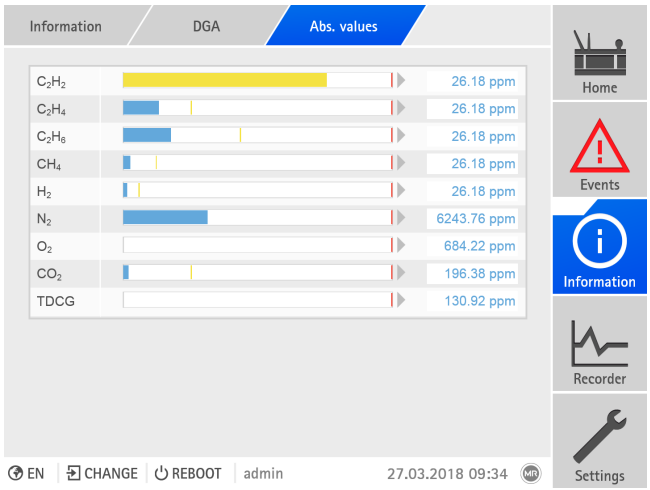

Figure 190: Display of absolute values

► Go to **Information > Active part > DGA > Absolute values**.

9.27.2.2 Rates of increase

You can display the calculated rates of increase of the gases (ppm/d and ppm/y). The bar chart shows a graphical representation of the actual rate of increase (ppm/d) and the set limit values (yellow, red). The set evaluation interval is the decisive factor for the display of rates of increase.

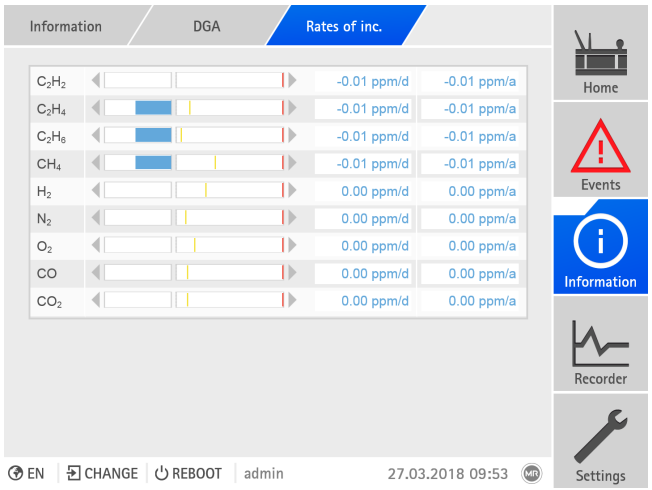

Figure 191: Displaying the rates of increase

► Go to **Information > Active part > DGA > Rates of increase**.

9.27.2.3 Measured value trend

You can display the temporal progression of the measured DGA measurements over the last 10 days. To do so, proceed as follows:

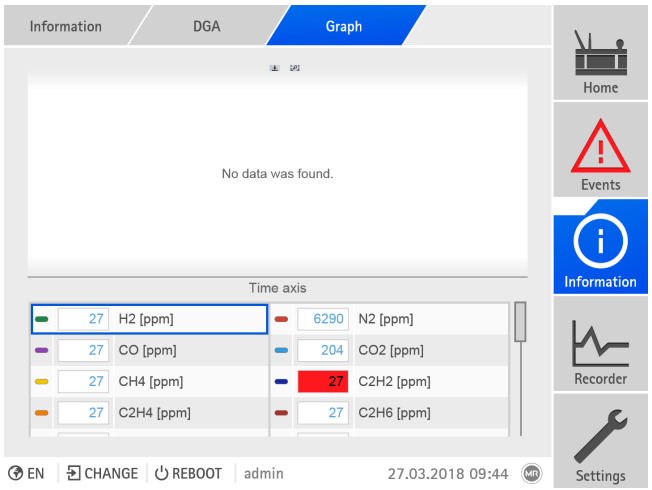

Figure 192: DGA measured value trend

► Go to **Information > Active part > DGA > Graph**.

You can also display the DGA measured value trend over a time period that you define. You will find more information on this in the section "Measured value recorder" [►Section 9.24.2, Page 246].

9.27.2.4 Duval analysis

The display of the Duval analysis shows the following information:

- Duval triangle, with the allocation of the last 10 measured values in the areas of the various error types.
  - Latest measured value: Darkest area with a display of the measurement error.
  - Earliest measured value: Lightest area
- Display of the error types. The error type of the latest measured value is highlighted in white.
- Gas concentrations of the latest measured value

If you call up the visualization using a PC, the gas concentrations and the time of the measurement are displayed for each measured value via tooltip.

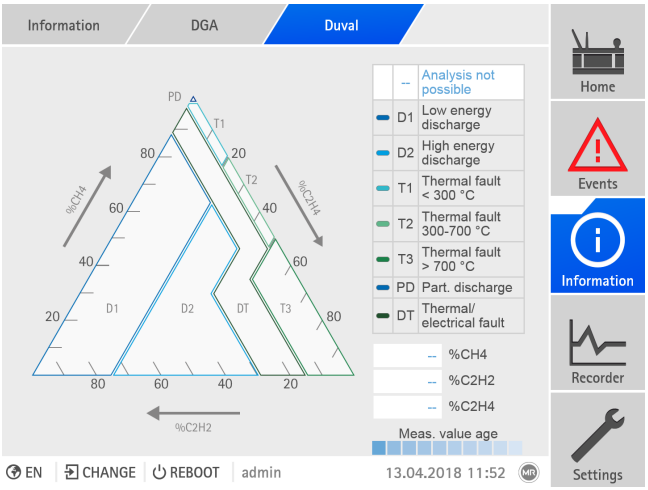

Figure 193: Display of the Duval analysis

► Go to **Information > Active part > DGA > Duval**.

9.27.2.5 Rogers analysis

The display of the Rogers analysis shows the following information:

- 3D diagram, with the allocation of the last 10 measured values in the areas of the various error types.
  - Latest measured value: Darkest area with a display of the measurement error.
  - Earliest measured value: Lightest area
- Display of the error types. The error type of the latest measured value is highlighted in white.
- Proportion of the gas concentrations of the latest measured value

If you call up the visualization using a PC, the proportions of the gas concentrations and the time of the measurement are displayed for each measured value via tooltip. Furthermore, you can rotate the diagram using the mouse.

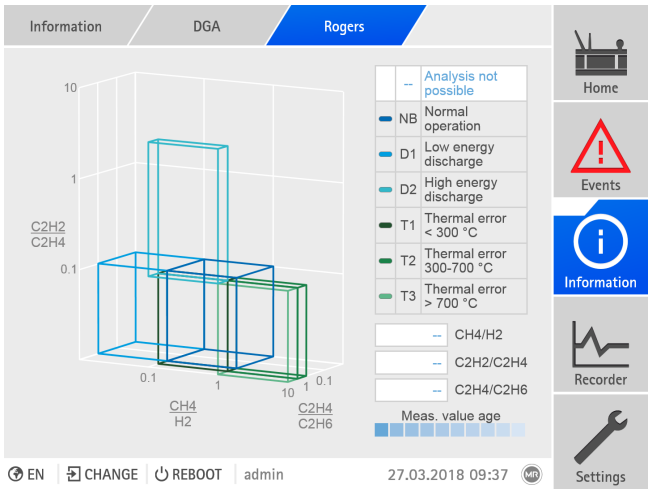

Figure 194: Display of the Rogers analysis

► Go to **Information > Active part > DGA > Rogers**.

9.27.2.6 Dörnenburg analysis

The display of the Dörnenburg analysis shows the following information:

- Tabular display of the latest 10 errors
- Display of the error types. The error type of the latest measured value is highlighted in white.
- Proportion of the gas concentrations of the latest measured value

If you call up the visualization using a PC, the proportions of the gas concentrations are displayed for each measured value via tooltip.

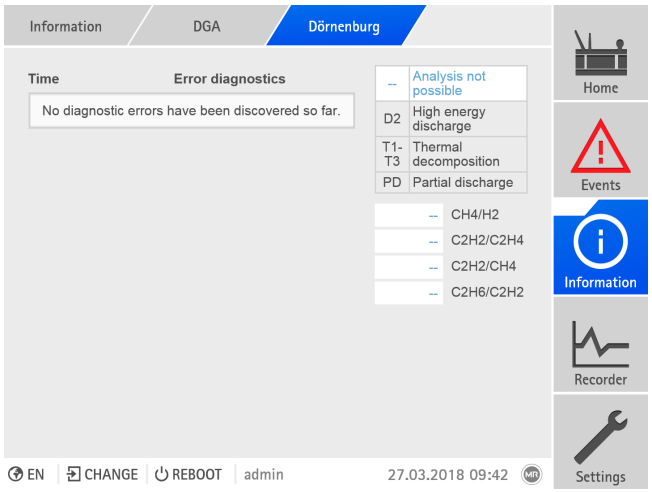

Figure 195: Display of the Dörnenburg analysis

► Go to **Information > Active part > DGA > Dörnenburg**.

9.27.2.7 IEC 60599 analysis

The display of the IEC 60599 analysis shows the following information:

- 3D diagram, with the allocation of the last 10 measured values in the areas of the various error types.
  - Latest measured value: Darkest area with a display of the measurement error.
  - Earliest measured value: Lightest area
- Display of the error types. The error type of the latest measured value is highlighted in white.
- Proportion of the gas concentrations of the latest measured value

If you call up the visualization using a PC, the proportions of the gas concentrations and the time of the measurement are displayed for each measured value via tooltip. Furthermore, you can rotate the diagram using the mouse.

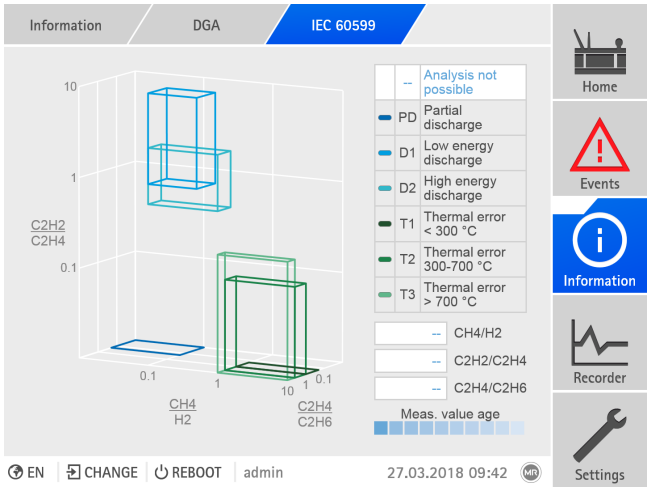

Figure 196: Display of the IEC 60599 analysis

► Go to **Information > Active part > DGA > IEC 60599**.

9.28 MR sensor bus

The optionally available MR sensor bus function lets you connect digital and analog sensors to the device over Modbus RTU. The MR sensor bus supports the connection of up to 31 sensors (Modbus slaves). The ISM® device operates as the Modbus master.

Ensure that no other Modbus master is connected over the MR sensor bus. Assign a unique Modbus address to each sensor you are connecting over MR sensor bus. The MR sensor bus may experience errors if multiple sensors are using the same Modbus address.

9.28.1 Configuring MR sensor bus

If you would like to use the MR sensor bus, you can configure the Modbus protocol with the following parameters.

Note that the data transmission depends heavily on the number of sensors and data points as well as the query rate and send delay time parameters. Value changes can be transmitted on a delay lasting from several seconds to a few minutes as a result.

The data values transmitted over Modbus do not get checked for validity (valid flag). Therefore, the failure of a sensing element cannot be detected.

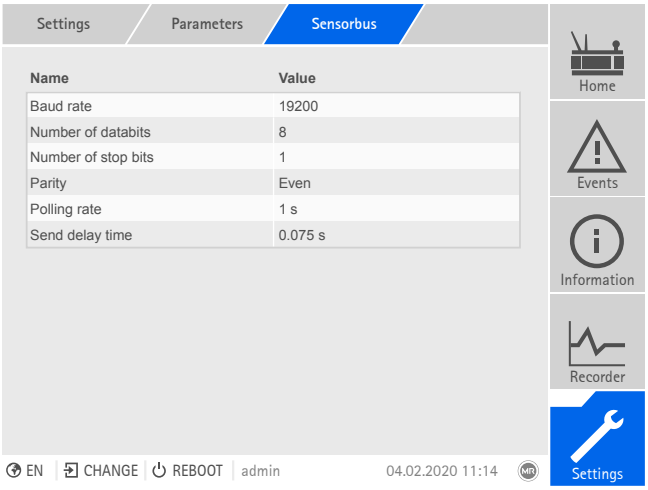

Figure 197: Sensor bus

The operation described below is only possible if you access the visualization using a computer. You must also have a Parameterizer or Administrator user role.

1. Go to **Settings > Parameters > System > Sensor bus**.
2. Select the desired parameter.
3. Set the parameter.
4. Press the **Accept** button to save the modified parameter.

Baud rate

You can use this parameter to set the serial interface's baud rate. You can select the following options:

- 9600 baud
- 19200 baud
- 38400 baud
- 57600 baud
- 115200 baud

Number of data bits

You can use this parameter to set the number of databits.

Number of stop bits

You can use this parameter to set the number of stop bits.

Parity

You can use this parameter to set the parity. You can select the following options:

- None
- Even
- Odd

Query rate

This parameter lets you set the minimum time interval to be used to query the sensors.

Send delay time

This parameter lets you set the period that the device is to wait between the response of one sensor and the query of another sensor.

9.28.2 Managing sensors

This menu lets you manage sensors connected to the device over the MR sensor bus. The following information is displayed:

- Sensor name
- Sensor version
- Sensor manufacturer
- Sensor Modbus address
- Status
  - Blue: The sensor is connected to the sensor bus
  - Red: The sensor is not connected to the sensor bus

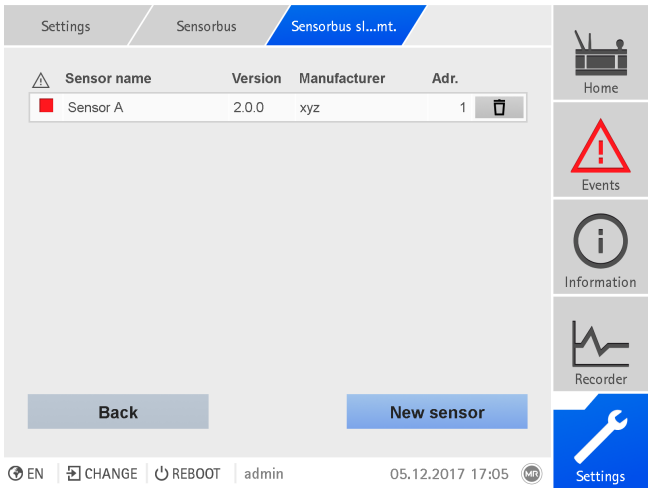

Figure 198: Managing sensors

The operation described below is only possible if you access the visualization using a computer. You must also have a Parameterizer or Administrator user role.

Adding a sensor

If you would like to add a sensor, then you have to set the Modbus address, sensor name and version. In addition, you can select whether the device is to perform an automatic function assignment of the data points.

Proceed as follows to add a sensor:

1. Go to **Settings > Sensor bus > Sensor management**.
2. Press the **New sensor** button.

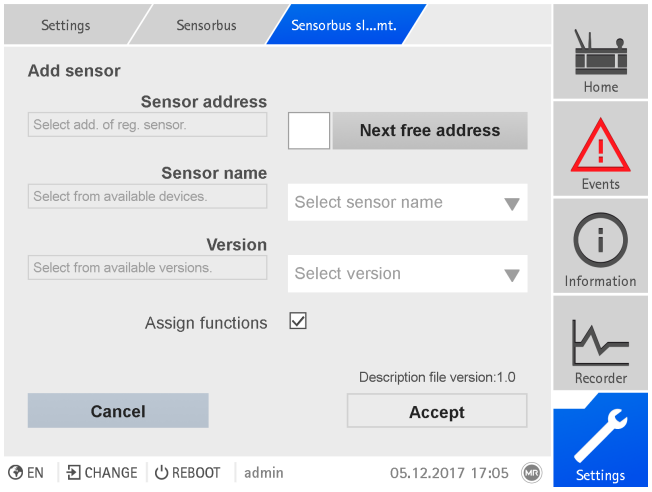

Figure 199: Add sensor

3. Enter the **Modbus address** or press the **Next free address** button.
4. Select the **Sensor name**.

5. Select the **Version**.
6. If necessary, enable the **Assign functions** option.
7. Press the **Accept** button.
8. After adding a sensor or several sensors, restart the device to apply the changes.

Before restarting the device, you can add even more sensors or change additional settings such as the function assignment or configuration of analog or digital inputs.

Removing a sensor

Proceed as follows to delete a sensor:

1. Go to **Settings > Manage sensor**.
2. Press the button to delete the sensor.

9.28.3 Function assignment

You can link the transmitted signals from the sensor to functions on the device. This requires configuring the desired device functions of the digital and analog inputs for Modbus. Observe the following sections for more information:

- Linking digital inputs and outputs [▶Section 9.30, Page 292]
- Linking analog inputs and outputs [▶Section 9.29, Page 290]

If device functions are configured for Modbus, you can link the functions to the data points of the sensors.

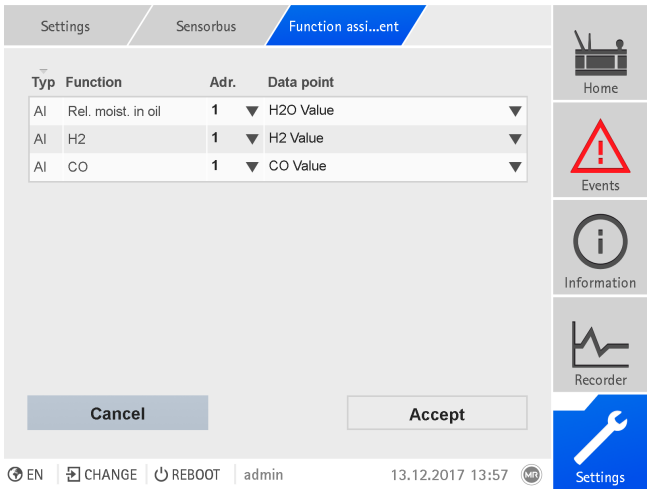

Figure 200: Assigning functions

The operation described below is only possible if you access the visualization using a computer. You must also have a Parameterizer or Administrator user role.

Proceed as follows to assign the functions:

✓ The functions of the digital signals [▶Section 9.30, Page 292] and analog signals [▶Section 9.29, Page 290] are configured for Modbus.

1. Go to **Settings > Sensor bus > Function assignment**.
2. Select the desired sensor **address**.
3. Select the desired **data point**.
4. Press the **Accept** button to save the changes.
5. After assigning the functions, reset the device to apply the changes.

9.28.4 Defining the sensors

This menu lets you define your own sensors, which you can connect to the device over the MR sensor bus. The defined sensors are then available in the sensor management function as a selection option.

The sensor editor shows you an overview of the defined sensors:

- Name
- Version
- Manufacturer

You can add, edit or delete sensor definitions.

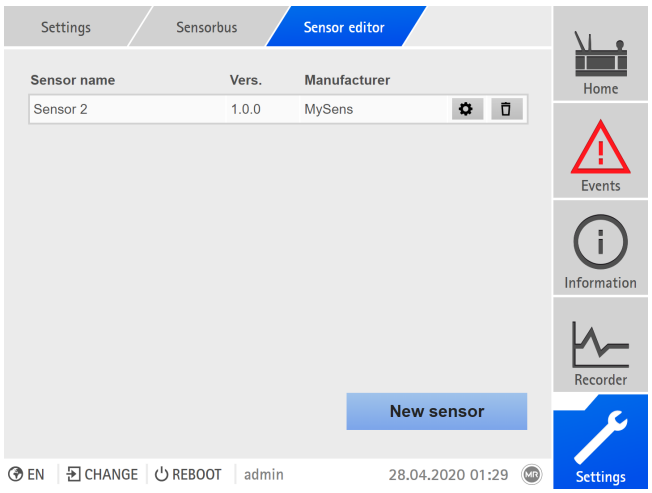

Figure 201: Sensor editor

Incorrect configurations can cause unwanted device behavior. Ensure that the sensor configuration is performed only by specialists with knowledge of the overall system and use the two-man rule for reviewing the configuration.

Adding a sensor definition

You have to set the following values to add a sensor:

Value	Description
Sensor name	Entry field, max. 20 characters
Sensor version	Format: `X.Y.Z` (e.g. 1.5.2), used together with the sensor name to provide unique identification of the sensor in the sensor management menu.
Sensor manufacturer (optional)	Entry field, max. 15 characters
Data points	Configuration of the sensor data points

Table 86: Adding sensors

The operation described below is only possible if you access the visualization using a computer. You must also have a Parameterizer or Administrator user role.

Proceed as follows to add a sensor:

1. Go to **Settings > Sensor bus > Sensor editor**.
2. Press the **New sensor** button.

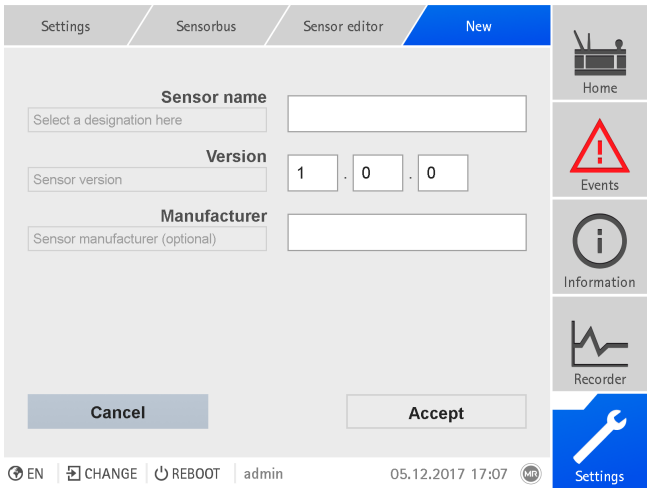

Figure 202: Defining a new sensor

3. Enter the **sensor name**, **sensor version** and **sensor manufacturer** (optional).
4. Press the **Accept** button to save the settings and configure the data points.

Configuring data points

You must set the following values to configure a data point:

- Type
  - IREG: Input register (analog input)
  - DISC: Discrete input (digital input)
  - HREG: Holding register
  - COIL: Digital input/output
- Register
- Description
- Byte order
  - Little-endian
  - Big-endian
- Data type
- Multiplier (only with IREG or HREG)
- Optional: Validation (only with IREG or HREG)
  - DISC or COIL for validation designation
  - Minimum and maximum permitted value of the sensor (based on the raw value determined by the sensor, setting range dependent on the data type)

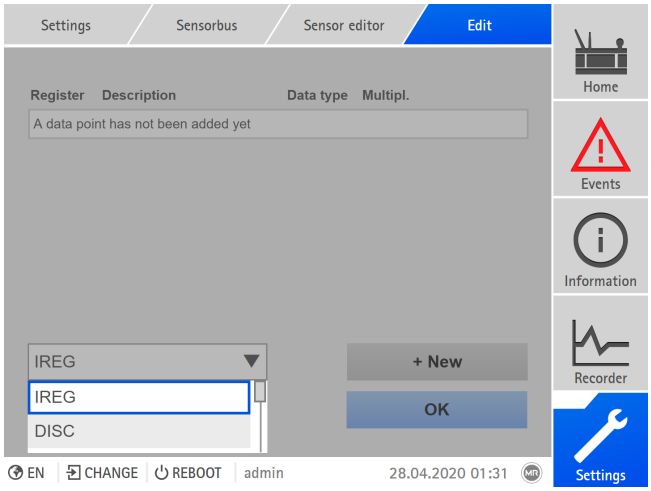

Figure 203: Configuring data points

To configure a data point, proceed as follows:

1. Select the desired **type**.
2. Press the **+ new** button to add a new data point or press the button to edit a data point.

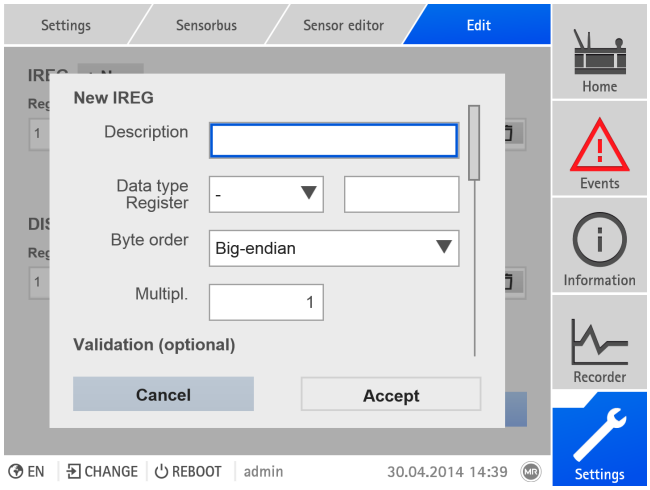

Figure 204: Adding a data point

3. Enter a **description**.
4. Select a **data type** and **register**.
5. Select the **byte order** of the sensor.
6. Only with IREG or HREG: Enter the **multiplier**.
7. Optional (only with IREG or HREG): Enter the **register** of the DISC or COIL for validation and select the value for **validity** (High-active: 1 = valid; Low-active: 0 = valid).
8. Optional (only with IREG or HREG): Enter the **minimum** and **maximum** value for the validation. If the raw value is not within the set range, the value is interpreted as being invalid.
9. Press the **Accept** button to save the data point.

Editing a sensor definition

Editing the sensor definition does not have any effect on sensors that have already been added to the sensor management function. The edited sensor definition is available only if you add a new sensor to the sensor management function.

To edit the sensor definition, proceed as follows:

1. Go to **Settings > Sensor bus > Sensor editor**.
2. Press the button.

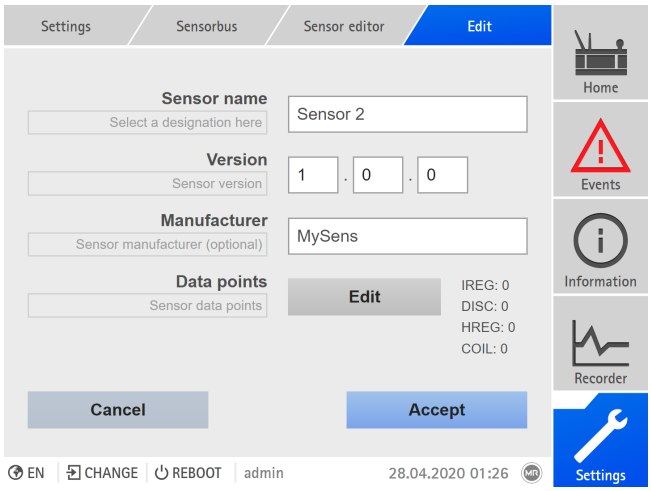

Figure 205: Editing a sensor definition

3. Enter the **sensor name**, **sensor version** and **sensor manufacturer** (optional).
4. Optional: Press the **Edit** button to go to the data point configuration. Any changes made are applied in this case.
5. Press the **Accept** button to save the settings.

Deleting a sensor definition

Deleting the sensor definition does not have any effect on sensors that have already been added to the sensor management function.

To delete the sensor definition, proceed as follows:

1. Go to **Settings > Sensor bus > Sensor editor**.
2. Press the button.

9.28.5 Displaying information on the connected sensors

You can display information on the status and the current values of all sensors that you have added to the sensor management function. The overview screen displays the following information:

- Sensor status
  - Red: Error
  - Blue: OK
- Name
- Version

- Manufacturer
- Modbus address

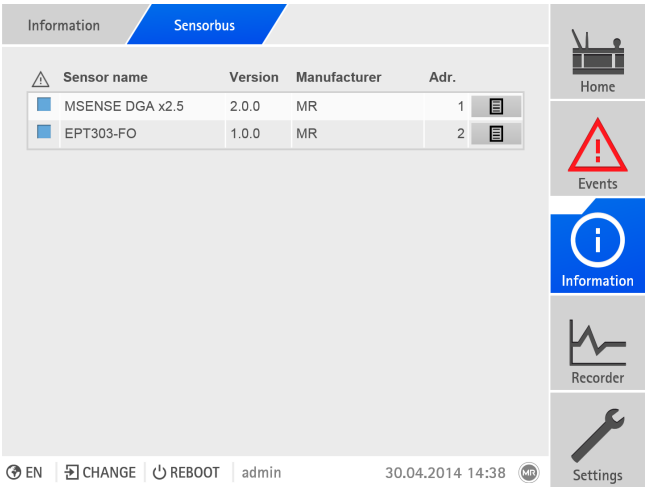

Figure 206: Overview screen

► Go to **Information > System > Sensor bus**.

Detailed information on the sensor

You can display the current transmitted data point for each sensor on the overview screen. The following information is displayed:

- Register (Reg.)
- Description
- Raw value
- Function value
- Function

If a value is identified as being "invalid", this value is displayed in red. If you have assigned a function to the sensor, the function value is also displayed.

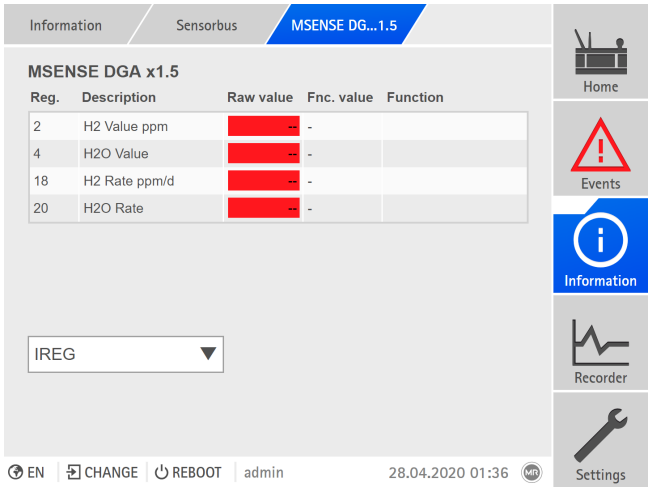

Figure 207: Detailed information

1. Press the button.
2. Select the desired **type**.

9.29 Configuring analog inputs and outputs (optional)

You can flexibly configure the device's analog inputs and outputs and assign device functions.

The device supports analog sensors with linear characteristic curves and only outputs analog signals with linear characteristic curves.

Correction factor and offset

Setting a correction offsets systematic errors of the analog signals. The correction is determined by multiplying a factor by the sum of the offset. The minimum and maximum values of the function values apply as a limit value for the correction. There is no limit for the correction offset.

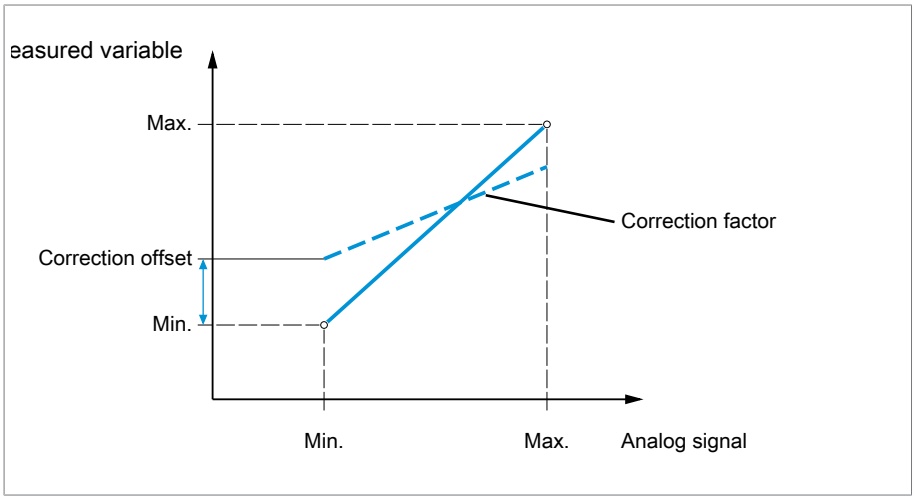

Figure 208: Analog signal with linear characteristic curve, correction factor <1 and correction offset

If you have connected sensors over the MR sensor bus, you must select the "Modbus" signal type for the desired functions. Observe the additional information provided in the MR sensor bus [▶Section 9.28, Page 279] section.

NOTICE

Damage to the device and sensors!

Incorrectly connected and configured analog inputs/outputs may result in damage to the device and sensor.

- ▶ Follow information about connecting analog sensors [▶Section 6.6.7, Page 88].
- ▶ Configure analog inputs and outputs according to the connected sensors.

The following information is displayed in tabular form for configuring the analog inputs and outputs. Grayed-out elements cannot be changed.

Property	Options
Function	Function of the analog input (I: ...) or the analog output (O: ...). You can adjust the designation.
Signal type	Select signal type of analog sensor or deactivate analog output. ▪ 4...20 mA ▪ PT100-2/3/4, PT1000-2/3/4 ▪ Modbus (MR sensor bus)
Card/channel[1)]	Select the slot and channel of the analog sensor. Note the connection diagram supplied.
Unit [1)]	Set the unit of the signal.
Decimal places [1)]	Set up to three decimal places.
Minimum/maximum value [2)]	Set the minimum and maximum values of the sensor, e.g. with a 4...20 mA signal, the corresponding measured value for 4 mA and the corresponding value for 20 mA.
Correction factor [3)]	Set the correction factor (m) for the correction of the function value (x). The corrected function value (y) is: y = (m * x) + t
Correction offset [3)]	Set the offset (t) for the correction of the function value (x). The corrected function value (y) is: y = (m * x) + t

Table 87: Configuration of the analog inputs and outputs

[1)] Only available for GPAI.

[2)] Not available with sensors connected over the MR sensor bus (Modbus).

[3)] Only available for inputs.

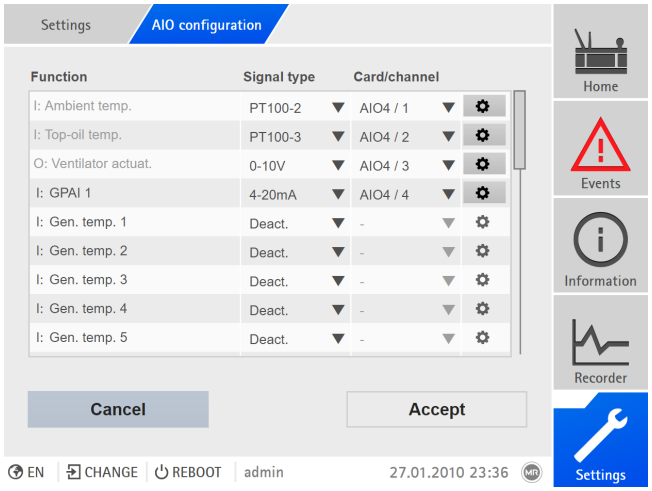

Figure 209: Configuring analog inputs/outputs

You can only change the configuration of the analog inputs and outputs if you have a Parameter Configurator or Administrator role.

When in delivery status, you can log in as the administrator as follows:

- User name: `admin`
- Password: `admin`

Creating a backup

You need to create a backup to be able to reset the system in the event that any incorrect configuration settings are made. To do so, proceed as follows:

1. Go to **Settings > Export**.
2. Go to the option **Settings** to export a backup copy of the current settings.
3. Select the desired **Interface** (USB or PC).
4. Press the **Export** button to start the export.

Configuring AIO

1. Go to **Settings > AIO configuration**.
2. Configure properties such as **function**, **signal type** and **card/channel**.
3. Select the ⚙ button to configure the values as desired.

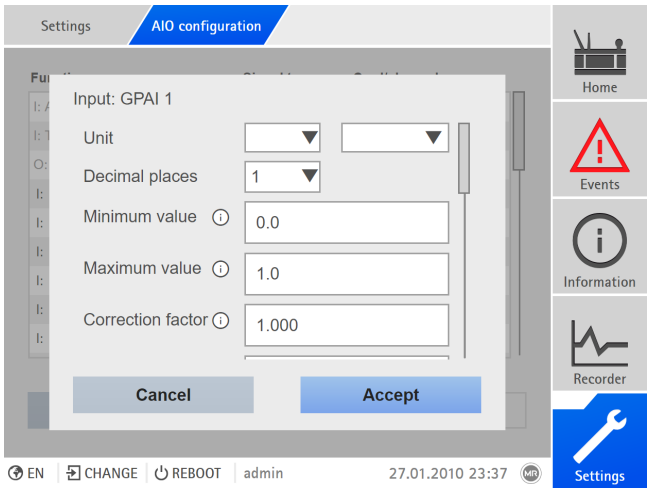

Figure 210: Entering values

4. Press the **Accept** button.
5. Confirm the security prompt with **Save** to save the changes.

9.30 Configuring digital inputs and outputs

Upon delivery, the configurable digital inputs and outputs of the device are configured as follows:

- Input: High active
- Output: N/O contact (NO)

You can change this configuration if necessary.

If you have connected sensors over the MR sensor bus, you must select the "Modbus" signal type for the desired functions. Observe the additional information provided in the MR sensor bus [▶Section 9.28, Page 279] section.

Ensure that the configuration of the digital inputs and outputs is suitable for the functions used. Otherwise, malfunctions may occur in the device and the connected periphery.

The following information is displayed in tabular form for configuring the digital inputs and outputs. Grayed out elements cannot be changed.

Property	Options
Function	Function of the digital input (I: ...) or the digital output (O: ...). You can adjust the designation.
Signal type	Select signal type: ▪ Digital: Digital input ▪ Modbus (MR sensor bus)
Configuration[1)]	DI: High active or low active DO: N/O contact (NO), N/C contact (NC); Note: If the device is disconnected or in the event of an error, the digital outputs are always open (no bi-stable relay).
Assembly/ channel[1)]	Channel of the DIO assembly to which the function is linked. Functions that are not linked with a channel are identified with "-". Note the connection diagram supplied.

Table 88: Configuration of the digital inputs and outputs

[1)] Not available with sensors connected over the MR sensor bus (Modbus).

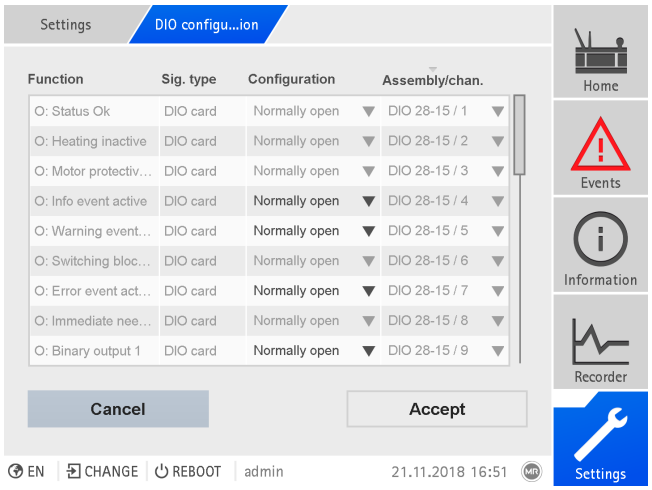

Figure 211: Configuring digital inputs and outputs

The operation described below is only possible if you access the visualization using a computer. You can only change the configuration of the digital inputs and outputs if you have a Parameter Configurator or Administrator role.

When in delivery status, you can log in as the administrator as follows:

- User name: `admin`
- Password: `admin`

Creating a backup

You need to create a backup to be able to reset the system in the event that any incorrect configuration settings are made. To do so, proceed as follows:

1. Go to **Settings > Export**.
2. Go to the option **Settings** to export a backup copy of the current settings.
3. Select the desired **Interface** (USB or PC).
4. Press the **Export** button to start the export.

Configuring DIO

To configure the device's digital inputs and outputs, proceed as follows:

1. Go to menu item **Settings > DIO configuration**.
2. Where necessary, select the buttons ▲ or ▼ to sort the properties in a column alphabetically.
3. Configure the properties as desired.
4. Press the **Accept** button.
5. Confirm the security prompt with **Yes** to save the changes.

9.31 Maintenance (optional)

The device monitors the following maintenance:

Maintenance	Description
OLTC maintenance	The on-load tap-changer must be maintained in accordance with the MR standards.
OLTC replacement	The on-load tap-changer must be replaced with a new on-load tap-changer.
DSI replacement	The diverter switch insert must be replaced with a new diverter switch insert.
Contact wear	The main switching contacts or transition contacts of the on-load tap-changer must be exchanged or replaced.
Oil change and cleaning	The oil must be changed and the diverter switch insert, oil compartment, and oil conservator must be cleaned.
Selector maintenance	The on-load tap-changer selector must be maintained in accordance with the MR standards.
Oil sample	An oil sample must be taken and analyzed; the limit values specified by MR for added insulating oil must be observed.
Oil filter unit	The oil filter of the oil filter unit must be replaced.
OLTC operator interval	Maintenance interval for the on-load tap-changer; the interval depends on the number of tap-change operations or on time, and the operator can specify it.
Transformer operator interval	Time-dependent maintenance interval for the transformer, which the operator can specify.

Table 89: Maintenance tasks

9.31.1 Setting operator interval for OLTC maintenance

You can define the maintenance interval of your choice for the on-load tap-changer. You can define the maintenance interval as dependent on time and/or number of tap-change operations. If the limit is reached (100%), the device triggers an event message (red).

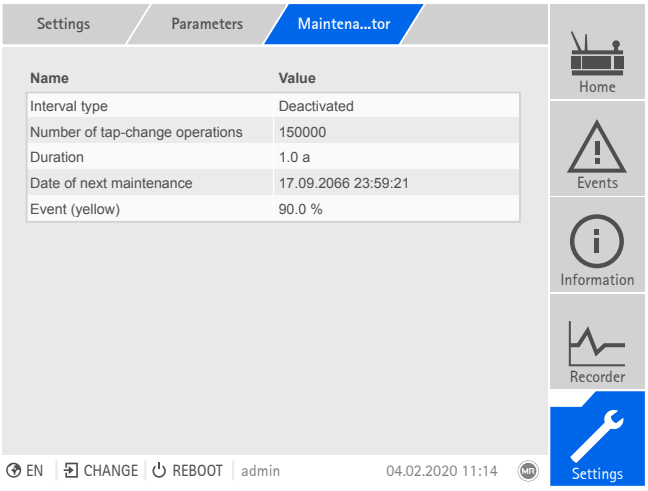

Figure 212: Maintenance: OLTC operator

1. Go to **Settings > Parameters > On-load tap-changer > Maintenance: OLTC operator**.
2. Select the desired parameter.
3. Set the desired parameter.
4. Press the **Accept** button to save the modified parameter.

9.31.2 Setting operator interval for transformer maintenance

You can define a maintenance interval of your choice for the transformer. The maintenance interval is dependent on time. If the limit is reached (100%), the device triggers an event message (red).

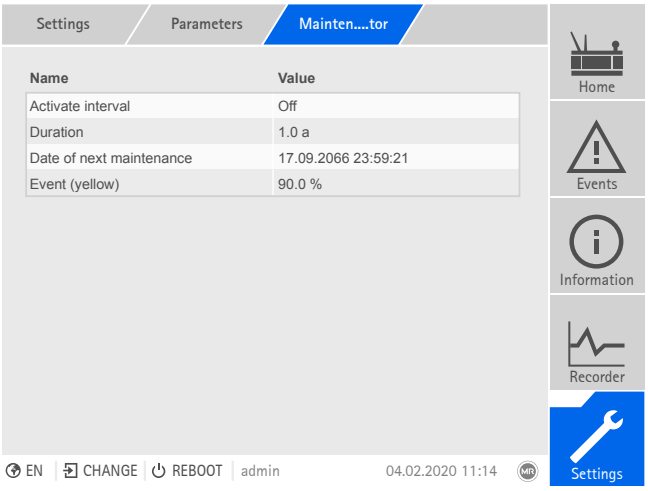

Figure 213: Maintenance: Transformer operator

1. Go to **Settings > Parameters > Active part > Maintenance: Transformer operator**.
2. Select the desired parameter.
3. Set the desired parameter.
4. Press the **Accept** button to save the modified parameter.

9.31.3 Undertaking and confirming maintenance

Once you have undertaken maintenance, you can confirm this on the device and thereby reset the maintenance interval. The following maintenance parameters can be entered based on the maintenance type:

Value	Description
Date	Date of maintenance.
Operations counter	Reading of the operations counter at the time of maintenance. You can enter the current counter reading or a smaller counter reading.
Contact wear (only OILTAP®) ▪ MSCA ▪ MSCB ▪ TC1A ▪ TC1B ▪ TC2A ▪ TC2B	Overall contact wear on the stationary contact and moving contact. If you have measured the contact wear during maintenance and continue to use the contacts in their original positions, then enter the measured values and select "No" in the prompt that reads "Contacts exchanged/replaced" to confirm it. This causes the monitoring system to optimize its calculation model and subsequent calculation of the contact wear is more precise. If you have exchanged (other position) or replaced contacts, then enter the contact wear found on the mounted contacts (for new contacts: 0.000 mm) and select "Yes" in the prompt that reads "Contacts exchanged/replaced" to confirm it.

Table 90: Maintenance parameters

Determining the contact wear (only OILTAP®)

The thickness of the wear to be entered is the sum of the wear of the movable and the fixed contact part.

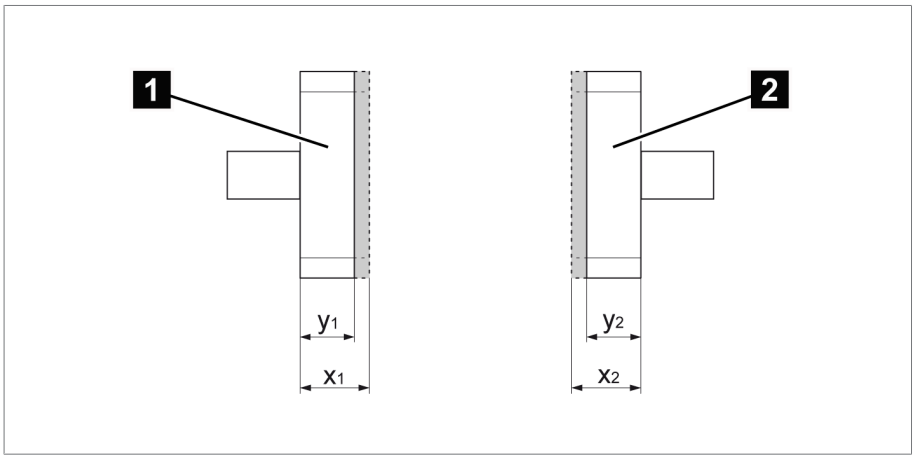

Figure 214: Determining contact wear

1	Fixed contact	y_1	Thickness of the worn contact coating (fixed contact)
2	Movable contact	x_2	Thickness of the contact coating when new (movable contact)
x_1	Thickness of the contact coating when new (fixed contact)	y_2	Thickness of the worn contact coating (movable contact)

The wear thickness z to be entered is determined as follows:

$$z = x_1 - y_1 + x_2 - y_2$$

Confirming maintenance

To confirm maintenance, proceed as follows:

1. Go to **Settings > Maintenance wizard**.

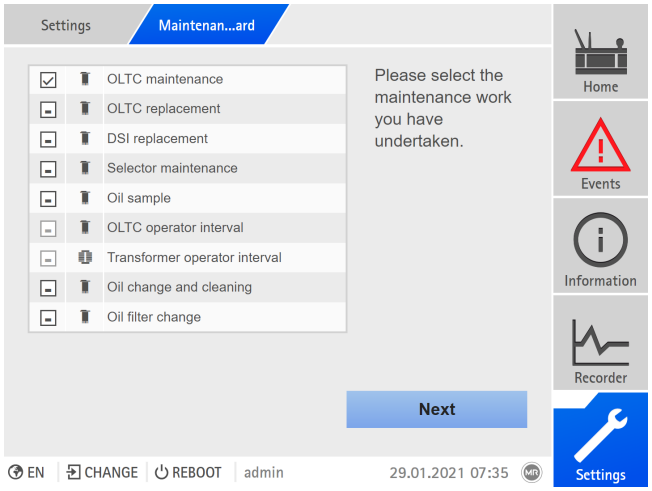

Figure 215: Maintenance wizard

2. Select the maintenance to be confirmed.
3. Press the **Next** button.
4. Enter the maintenance parameters.

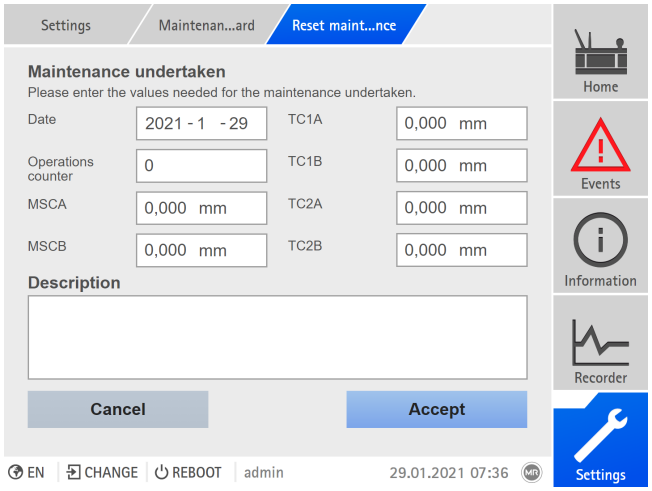

Figure 216: Undertaking and confirming maintenance

5. Press the **Accept** button to save the changed parameters.
   ⇨ Only for OILTAP®: A prompt appears asking if the contacts were exchanged or replaced.
6. Only for OILTAP®: Press **Yes** or **No** to confirm the prompt.

9.31.4 Displaying maintenance overview

The maintenance overview displays the progress of the individual maintenance intervals. You can also see the limit values for the "yellow" and "red" event messages. For the maintenance intervals of the on-load tap-changer, the device uses the recorded operating data to predict the date for the next maintenance appointment. The date is not displayed until enough operating data has been recorded.

If you have deactivated the "OLTC operator maintenance" or "Transformer operator maintenance" interval, the interval is shown grayed out in the maintenance overview.

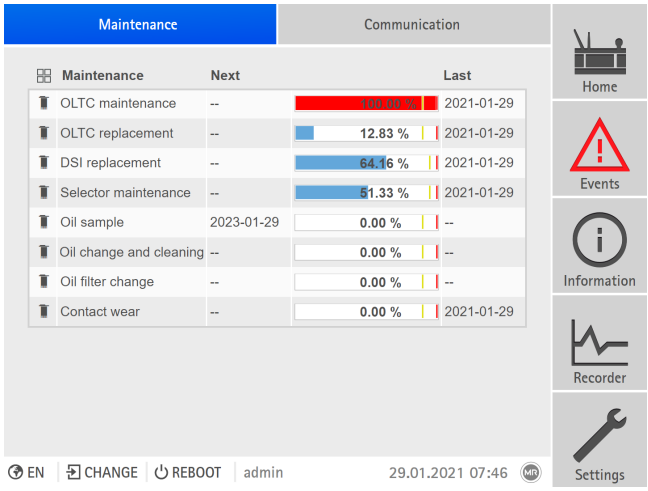

Figure 217: Maintenance overview

► Go to **Information > System > Maintenance**.

9.31.5 Displaying the maintenance logbook

All maintenance tasks that have been performed are displayed in the maintenance logbook. The entries are generated automatically if you perform maintenance using the maintenance wizard. You can also create separate entries.

The maintenance logbook displays the following information:

- Time of maintenance
- Mainten.type
- Description

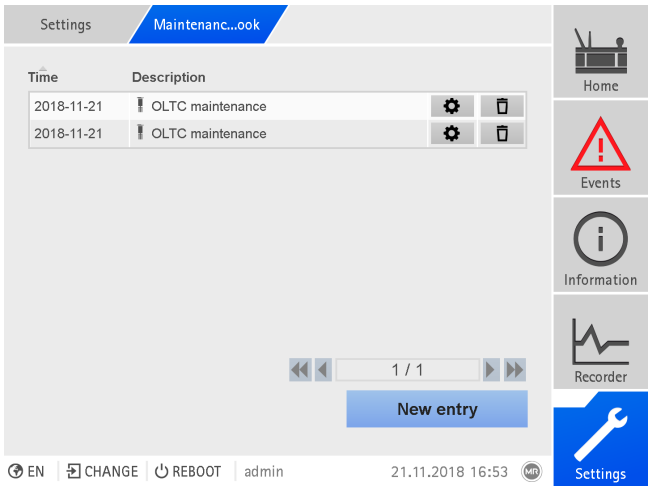

Figure 218: Maintenance logbook

To call up the maintenance logbook, proceed as follows:

► Go to **Settings > Maintenance logbook**.

Editing an entry in the maintenance logbook

You can edit the entries in the maintenance logbook as needed.

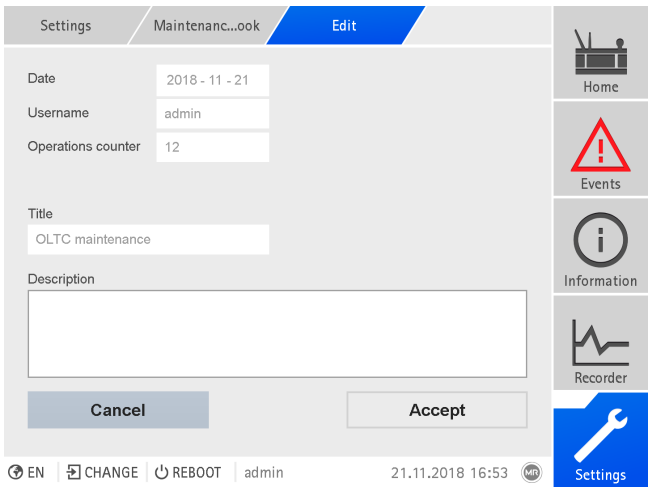

Figure 219: Editing an entry in the maintenance logbook

Proceed as follows to edit an entry in the maintenance logbook:

1. Go to **Settings > Maintenance logbook**.
2. Press the button in order to edit an entry.

Creating an entry in the maintenance logbook

Proceed as follows to create an entry in the maintenance logbook without using the maintenance wizard:

1. Go to **Settings > Maintenance logbook**.
2. Press the **New entry** button.
3. Enter the maintenance data.
4. Press the **Accept** button to save the entry.

Deleting an entry in the maintenance logbook

You can delete the entries in the maintenance logbook as needed. To do so, proceed as follows:

1. Go to **Settings > Maintenance logbook**.
2. Press the button in order to delete the entry.

9.31.6 Suppressing a maintenance event

You can use this function to suppress the event messages of maintenance tasks whose limit values have been reached for a specific number of on-load tap-change operations. If you acknowledge a maintenance event without performing maintenance, the device will report the event message after the set number of on-load tap-change operations.

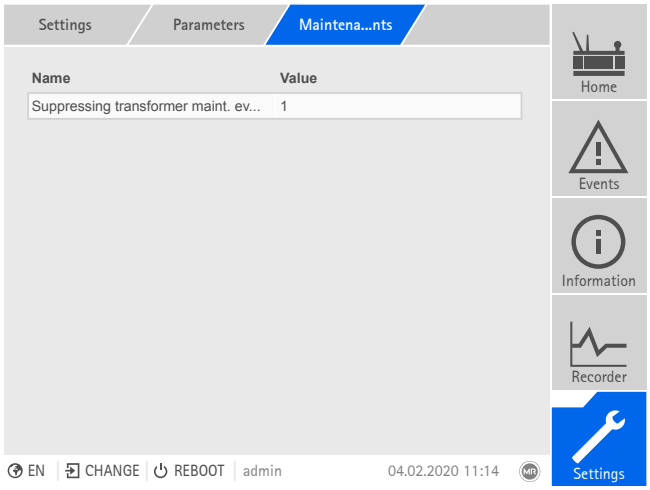

Figure 220: Suppressing a maintenance event

Suppressing a maintenance event

You can use this parameter to set the number of on-load tap-change operations for which the event message should be suppressed.

To suppress the maintenance event function, proceed as follows:

1. Go to **Settings > Parameters > Maintenance events**.
2. Select the desired parameter.

3. Set the parameter.
4. Press the **Accept** button to save the modified parameter.

9.32 Dynamic Transformer Rating (optional)

NOTICE

Damage to the transformer!

An impermissibly strong or long overload can irreversibly damage the transformer's insulation system. This can lead to increased gas formation and could cause the transformer to fail. Note that the permitted overload is calculated based on a thermal model in accordance with IEEE Std C57.91 or IEC 60076-7 and, as a result, deviations in the transformer's thermal model can occur.

► Ensure that the transformer's protective devices and equipment are functional.

► During overload operation, also monitor the measured values for temperature, power and gas content.

We recommend determining the design-specific parameters of the transformer using a heat test in order to improve the forecast calculation of the thermal model.

You can use the optional Dynamic Transformer Rating function (DTR) to determine the theoretical overload capacity of the transformer and the loss-of-life caused by it. The value can either be calculated in accordance with the IEEE Std C57.91 or IEC 60076-7 calculation model.

Two operating modes are distinguished for the Dynamic Transformer Rating. You can set the limit values for both operating modes:

Emergency mode

In emergency mode, unplanned malfunctions or failures occur in the grid which require the transformer to take on an increased load. Emergency mode helps support the grid in this process without damaging the equipment or triggering protection systems.

Insulation-friendly mode

In insulation-friendly mode, you must adjust the limit values for temperatures and for the maximum permitted aging for 24 hours depending on the planned duration of use of the transformer. This allows you to ensure a longer service life for the transformer.

Measurement uncertainties

To calculate the permissible overload, the moisture in oil value of the transformer is recorded in addition to the measured temperature of the uppermost oil layer and the calculated hot-spot temperature. The bubbling temperature is calculated from the moisture in oil value.

The calculation of the bubbling temperature is only sufficiently accurate if the transformer was in operation for a time period longer than 60 days and loaded evenly.

If your transformer has been out of operation for a long time and in operation for less than 60 days, or if your transformer is subject to large load deviations, the device cannot calculate the permissible load precisely.

9.32.1 Configuring the Dynamic Transformer Rating

To calculate the overload capability of the transformer, the following parameters must be set.

Before you can use this function, you must set the parameters in the "Hot-spot" [▶Section 9.26.1, Page 264] menu item.

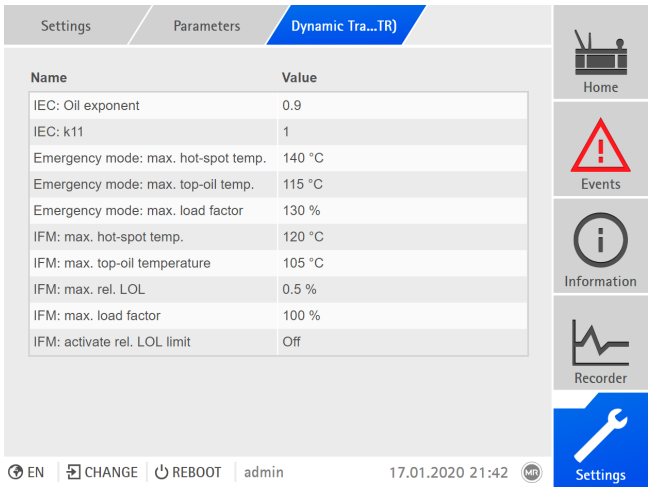

Figure 221: Dynamic Transformer Rating

1. Go to **Settings > Parameters > Active part > Dynamic Transformer Rating (DTR)**.
2. Select the desired parameter.
3. Set the parameter.
4. Press the **Accept** button to save the modified parameter.

Calculation method

You can use this parameter to set the method for calculating the overload. You can select the following options:

- IEC 60076-7
- IEEE Std C57.91

Rated power of the transformer

You can use this parameter to set the rated power of the transformer. This parameter is used for calculating the actual power based on the determined load factor.

Emergency mode max. hot-spot temperature

You can use this parameter to set the limit for the maximum hot-spot temperature of the transformer for emergency mode.

IFM: max. hot-spot temperature

You can use this parameter to set the limit for the maximum permissible hot-spot temperature of the transformer for insulation-friendly mode (IFM).

Emergency mode max. top-oil temperature

You can use this parameter to set the limit for the maximum temperature of the transformer top-oil for emergency mode.

IFM: max. top-oil temperature

You can use this parameter to set the limit for the maximum permitted temperature of the transformer top-oil for insulation-friendly mode (IFM).

IFM: max. relative aging rate

You can use this parameter to set the limit for the maximum permitted loss-of-life of the transformer for 24 hours for insulation-friendly mode (IFM).

Emergency mode max. load factor

You can use this parameter to set the limit for the maximum load factor K of the transformer for emergency mode.

IFM: max. load factor

You can use this parameter to set the customer-specific limit for the maximum permitted load factor of the transformer for insulation-friendly mode(IFM).

IFM: Activating/Deactivating the relative aging rate limit

You can use this parameter to activate or deactivate the limit for the maximum permitted loss-of-life of the transformer for 24 hours for insulation-friendly mode (IFM).

9.32.2 Displaying the Dynamic Transformer Rating

You can display the calculated values for insulation-friendly mode and the maximum possible load factor of the transformer in a tabular display or as a diagram. Based on the latest transformer measured values and the set limit values, the Dynamic Transformer Rating (DTR) function calculates the maximum remaining time and the maximum possible load factors for specified times.

DTR table

The following values are displayed in this menu:

- Current load factor K [%]
- Remaining time [min], depending on the current load factor for emergency mode
- Remaining time [min], depending on the current load factor for insulation-friendly mode at > 24 h (IFM)
- Maximum possible load factor for different times (IFM); see overview:

Column	Meaning
Time	Overload duration
Load factor K [%]	Calculated load factor K in %. Displays the permissible load factor for the corre-sponding overload duration.
Power [MVA]	Displays the permissible transformer apparent power for the corresponding overload duration. This value is calculated from the rated power and the load factor K.
Limit	Displays the limit value reached first if the transformer is overloaded with the recommended load factor K for the corresponding overload duration.
Rel. LOL [%]	Relative aging rate of the transformer in %. Overload refers to the service life of the transformer. Calculation is based on the set parameter "Anticipated service life" [▶ Page 269].

Table 91: Overload overview

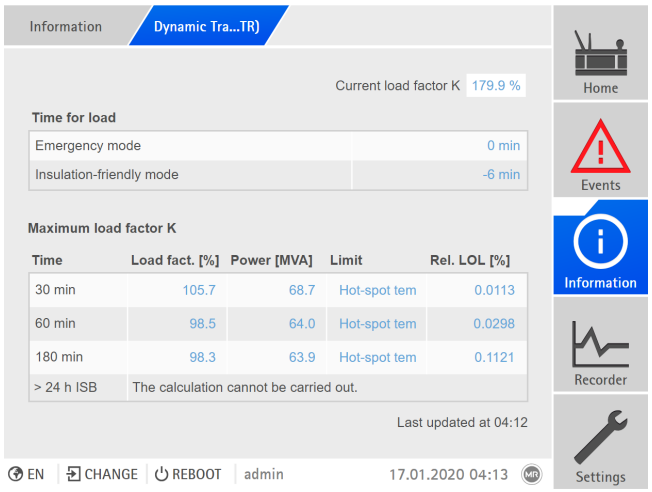

Figure 222: Overload table

▶ Go to **Information > Active part > Dynamic Transformer Rating (DTR)**.

DTR diagram

In this menu, you can display the calculated values graphically. For the selected overload period, the diagram shows the permissible load factor K and the forecast progression of the temperatures (hot-spot, top-oil) as well as the associated limit values. Furthermore, the diagram shows the progression of the forecast loss-of-life and the ambient temperature at the time of the calculation.

If you call up the visualization via a PC and your user role is either "Diagnostics", "Parameter Configurator" or "Administrator", you can export the DTR diagram data values as a csv file.

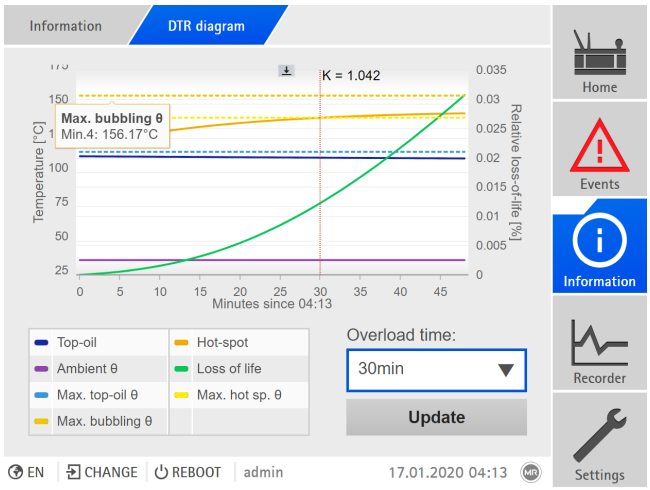

Figure 223: DTR diagram

1. Go to **Information > Active part > DTR diagram**.
2. Select the desired **Overload period**.
3. If necessary, select the **Update** button to update the view.
4. If required, select the button to export the overload diagram data.

9.33 Event management

The device is equipped with event management, which allows you to detect various device operating statuses and to adapt the behavior of the device. An overview of all possible events is given in the Event messages chapter.

9.33.1 Displaying and acknowledging events

To display the events currently active, proceed as follows:

► Go to **Events**.

⇨ A list of currently pending events appears.

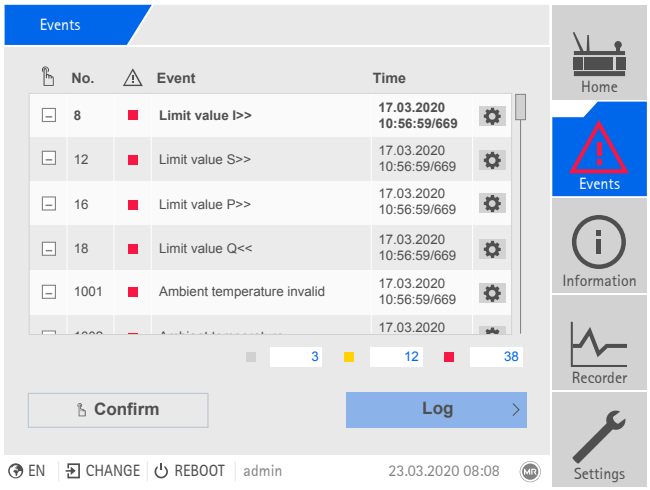

Figure 224: Overview of events currently active

Acknowledging events

Acknowledgeable events must be acknowledged in the event overview so that they are no longer displayed. All other events are automatically removed once the cause is remedied (e.g. limit value is no longer exceeded).

To acknowledge the events, proceed as follows:

► To acknowledge the events, highlight the desired events in the ☝ column, then press the **Acknowledge** button.

⇨ The events have been acknowledged.

9.33.2 Configuring events

The events have the following properties:

Property	Description
Event name	Brief name of event. If you delete all of the text, the standard text is displayed.
Event description	Description of event. If you delete all of the text, the standard text is displayed.
Event troubleshooting	Instructions for troubleshooting the cause of an event. If you delete all of the text, the standard text is displayed.
Category	▪ Error (red) ▪ Warning (yellow) ▪ Info (gray) This setting affects the color of the *Alarm* LED and the event symbol in the primary navigation.
Report	If you activate this option, the event is shown on the display and, if configured accordingly, issued via an output and the control system protocol.
Save	If you activate this option, the event is stored in the event memory.
Multi-set (not configurable)	The event can be triggered several times without having been deactivated in the meantime.
High active (not configurable)	High active: The device generates a signal if the event is pending. Low active: The device generates a signal so long as the event is not pending. If the event is pending, the signal is reset.
Acknowledgeable (not configurable)	Acknowledgeable events must be acknowledged in the event overview so that they are no longer displayed. All other events are automatically removed once the cause is remedied (e.g. limit value is no longer exceeded).
Blocking (not configurable)	If the event is active, it blocks automatic voltage regulation.

Table 92: Properties of events

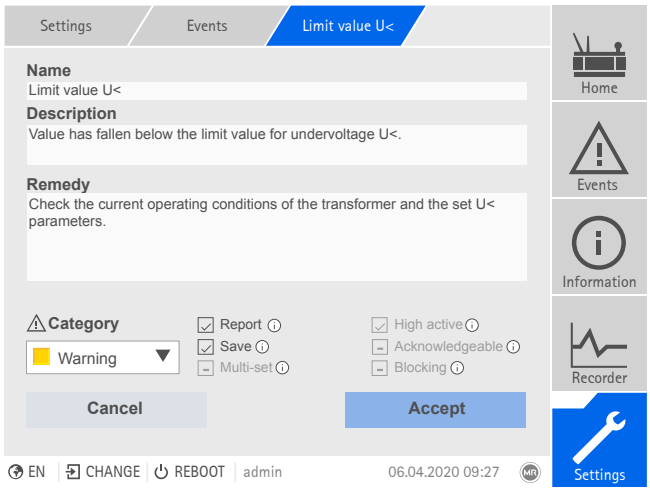

Figure 225: Configuring events

To configure an event, proceed as follows:

1. Go to **Settings > Events**.
2. Select the event to be changed in the list.
3. Select the desired options.
4. Press the **Accept** button to save the change.

9.33.3 Displaying event memory

Past events are stored in the event memory. The following information is displayed:

Column	Description
#	Consecutive number of events
No.	Event number for clear identification
⚠	Event category: ▪ Error (red) ▪ Warning (yellow) ▪ Info (gray)
Event	Event text
Time	Date and time of event (DD-MM-YYYY, HH:MM:SS/ms)
➔/←	Event coming/going: ➔ Event coming ← Event going

Table 93: Event memory

To call up the event memory, proceed as follows:

1. Go to **Events**.
2. Press the **Log** button.

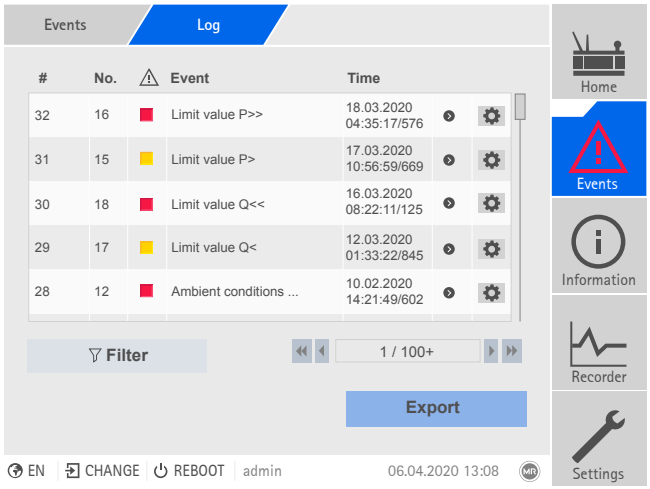

Figure 226: Event memory

Filtering events

To adjust the display, you can define a filter. To do so, proceed as follows:

1. Press the **Filter** button.
2. Enter the desired time period.
3. Select the desired event categories and the desired event status.
4. Select the desired events in the **Events** list.
5. Press the **Search** button to display the desired events.

Exporting events

You can export the event memory entries currently displayed as a csv file. If you first create a filter, only the filtered entries are exported.

To export the events, proceed as follows:

✓ First connect using Connect PC or connect a storage medium to the USB port on the CPU I [▶Section 4.5.3.1.2.1, Page 36] module.

1. Press the **Export** button.
2. Select the desired option for data transmission (PC or USB).

⇨ The data is exported.

9.34 User administration

User administration is based on a system of roles. You must assign a role to every user. You can define access rights to parameters and events for each role.

9.34.1 User roles

The access rights to device functions and settings are controlled using a hierarchical system of roles. The system has 5 different roles with different access rights. Some of these access rights are fixed, but you can configure the access rights to particular parameters and events. Note the Setting access rights to parameters and events [▶Section 9.34.4, Page 317] section.

If you are not logged in on the device, you will assume the "Data display" user role.

Upon delivery, the following roles are provided:

Role	Description
Data display	User who can only view data of relevance to operation. ▪ Display all parameters ▪ Display all events
Diagnostics	User who can view data and log data of relevance to operation. ▪ Display all parameters ▪ Display all events ▪ Export log data
Operator	User who can view data of relevance to operation and acknowledge events. The user can perform manual tap-change operations using the device's controls. ▪ Display all parameters ▪ Display and acknowledge all events
Parameter configurator	User who can view and modify data of relevance to operation. ▪ Display and modify all parameters ▪ Import and export parameters ▪ Display, modify, and acknowledge all events
Administrator	User who can view and modify all data. ▪ Read all parameters ▪ Display, modify, and acknowledge all events

Table 94: Roles in delivery status

Access to the following areas of the device is linked to the roles:

Function	Data display	Diagnostics	Operator	Parameter configurator	Administrator
Administration	-	-	-	-	+
Restart device	-	-	+	+	+
Import	-	-	-	+	+
Export	-	+	-	+	+
Set date and time	-	-	+	+	+
Calling up the commissioning wizard	-	-	-	+	+
Calibrate resistor contact series	-	-	-	+	+
Actuation of the RAISE, LOWER, REMOTE, AVR AUTO, and AVR MANUAL keys	-	-	+	+	+
Setting topology	-	-	-	+	+
Configuring analog inputs and outputs	-	-	-	+	+
Configuring digital inputs and outputs	-	-	-	+	+
Setting TPLE	-	-	-	+	+
Configuring data points	-	-	-	+	+
Calling up the maintenance wizard	-	-	-	+	+
Changing tap position table	-	-	-	+	+
Enabling ECOTAP Modbus	-	-	-	+	+
Adding sensors to the MR sensor bus	-	-	-	+	+

Table 95: Access rights permanently linked to the roles

9.34.2 Changing the password

All users can change their passwords provided that the user account is not set up as a group account. You can only change a group account's password if you are logged in as the administrator.

Note that the password must satisfy the following requirements:

- At least eight characters
- At least three of the four following character types
  - Upper case letters
  - Lower case letters

– Numbers
– Special characters

To change the password, proceed as follows:

1. Select the **user name** in the status line.

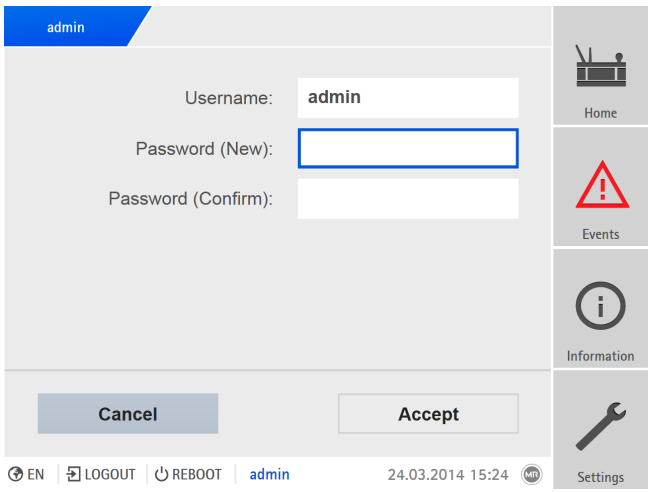

Figure 227: Changing the password

2. Enter the new **password** twice.
3. Press the **Accept** button to save the changed password.

9.34.3 Creating, editing and deleting users

You can set the following options for all users:

- Username and password
- Role: You can assign a role to every user. The access rights to parameters and events are linked to the roles.
- Group access: With this option, you can declare a user account to be a group account (e.g. for access by different people). Users with group access cannot change their own password. The password can only be changed by the administrator.
- Active: You can activate or deactivate the user. Deactivated users cannot log in. The user data is still stored in the device.
- Auto login: You can activate the Auto-login function for a user. This user is automatically logged in when the system is restarted or another user logs out.

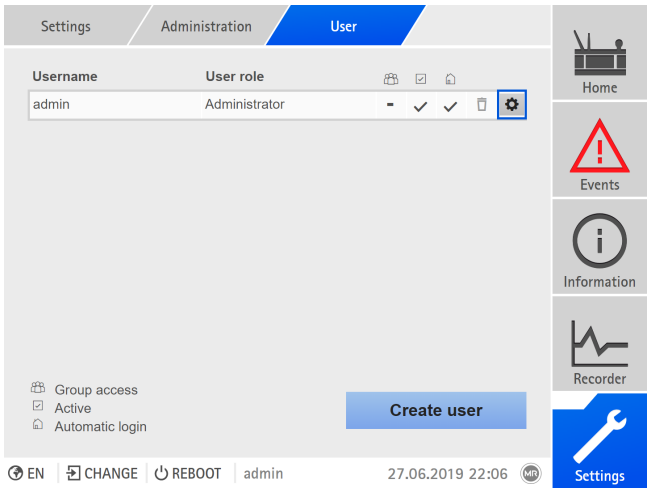

Figure 228: Overview of users created

You can only create, edit, and delete users if you are assigned an administrator role.

When in delivery status, you can log in as the administrator as follows:

- User name: `admin`
- Password: `admin`

Creating users

To create a new user, proceed as follows:

1. Go to **Settings > Administration > User**.
2. Press the **Create user** button.
3. Enter the **user name** once and the **password** twice.
4. Select the **role** you want.
5. If necessary, activate the **Group account**, **Active** or **Auto login** options.
6. Press the **Accept** button to save the user.

Editing users

To edit an existing user, proceed as follows:

1. Go to **Settings > Administration > User**.
2. In the list, select the ⚙ button for the desired user.
3. Make the amendments desired.
4. Press the **Accept** button to save the user.

Deleting user

To delete an existing user, proceed as follows:

1. Go to **Settings > Administration > User**.
2. In the list, select the button for the desired user.
3. Press the **Accept** button to delete the user.

9.34.4 Setting access rights to parameters and events

You can configure access rights to parameters and events for the available roles. The following options are available for this purpose:

- Read: Parameter/event may be displayed.
- Write: Parameter/event may be modified.
- Acknowledge: Event may be acknowledged.

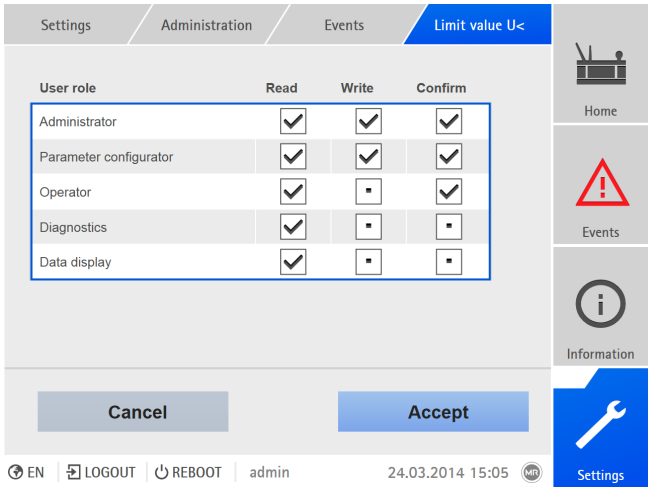

Figure 229: Setting access rights for an event

You can only change access rights if you are assigned an administrator role.

When in delivery status, you can log in as the administrator as follows:

- User name: `admin`
- Password: `admin`

To set the access rights to parameters and events, proceed as follows:

1. Go to **Settings > Administration > Parameters/events**.
   ⇨ A list of all parameters or events appears.
2. Select the desired entry in the list.
3. Select the options you want.
4. Press the **Accept** button to save the change.

9.34.5 User authentication via RADIUS (optional)

The device supports user authentication via RADIUS in accordance with RFC 2865. In this case, the device also functions as a RADIUS client. To use RADIUS, you must create a dictionary for ISM® devices on your RADIUS server and set the parameters for RADIUS on the device.

Note the following information:

- Only use RADIUS in a secure network, as sensitive information is transmitted.
- If a user ID has been created both on the RADIUS server and locally on the device, the device first tries to log in via the RADIUS server. If it is not possible to log in, the device will use the locally saved login data.
- If a user ID has not been created on the RADIUS server, the device uses the locally saved login data.

9.34.5.1 Creating a dictionary on the RADIUS server

You must create a dictionary for ISM® devices on your RADIUS server in accordance with the following specification.

```
VENDOR MR 34559
BEGIN-VENDOR MR
# Attributes
ATTRIBUTE MR-ISM-User-Group 1 integer
# Predefined values for attribute 'MR-ISM-User-Group'
VALUE MR-ISM-User-Group Administrator 1
VALUE MR-ISM-User-Group Parameter-configurator 2
VALUE MR-ISM-User-Group Operator 3
VALUE MR-ISM-User-Group Diagnostics 4
VALUE MR-ISM-User-Group Data-display 5
END-VENDOR MR
```

If your RADIUS server supports the importing of a dictionary, you can export the dictionary for ISM® devices from the device and import it onto your RADIUS server. For more information, refer to the information in the section titled Exporting data [▶Section 9.36.1, Page 323].

The user groups of the dictionary correspond to the user roles [▶Section 9.34.1, Page 313] of the device and the corresponding authorizations.

9.34.5.2 Configuring RADIUS

To establish a connection to the RADIUS server, you must set the following parameters.

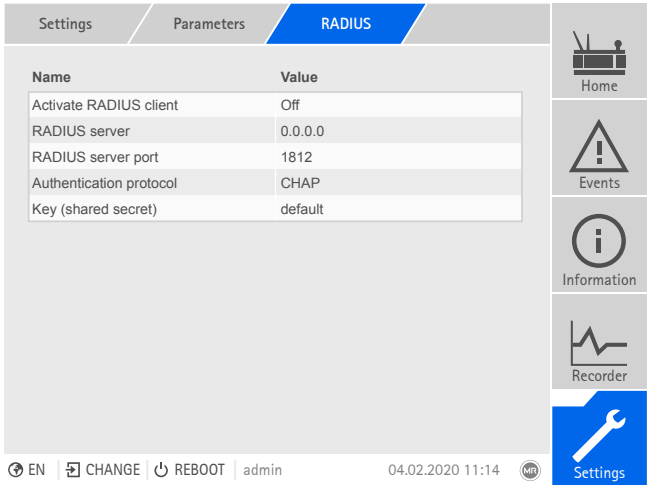

Figure 230: Configuring RADIUS

You can only configure RADIUS if you are assigned an administrator role.

When in delivery status, you can log in as the administrator as follows:

- User name: `admin`
- Password: `admin`

1. Go to **Settings > Parameters > System > RADIUS**.
2. Select the desired parameter.
3. Set the parameter.
4. Press the **Accept** button to save the modified parameter.

Activate RADIUS client

You can use this parameter to activate the RADIUS client.

RADIUS server

You can use this parameter to set the IP address of the RADIUS server.

RADIUS server port

You can use this parameter to set the port of the RADIUS server.

Authentication protocol

You can use this parameter to set the authentication protocol through which the server and client communicate. You can select the following options:

- PAP (password authentication protocol)
- CHAP (challenge handshake protocol)

Key (shared secret)

You can use this parameter to set the key (shared secret). You must set up the same key on the RADIUS client and the RADIUS server. The key may contain a maximum of 127 characters from the ASCII character set.

9.35 Information about device

9.35.1 Hardware

Under Hardware, you can display information on the device's hardware. You will find information about the signal level of the individual channels for the assemblies.

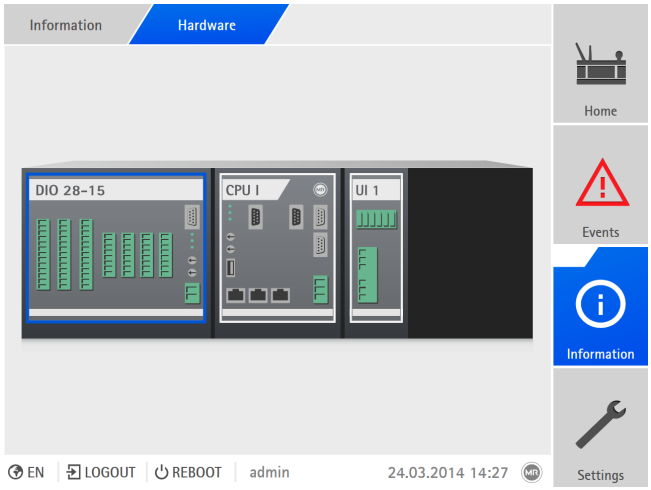

Figure 231: Displaying information about the device's hardware

1. Go to **Information > System > Hardware**.
2. Select the desired **Assembly** in order to display the signal levels of the channels.

9.35.2 Software

Under Software, you can display the version status of the software components of the device.

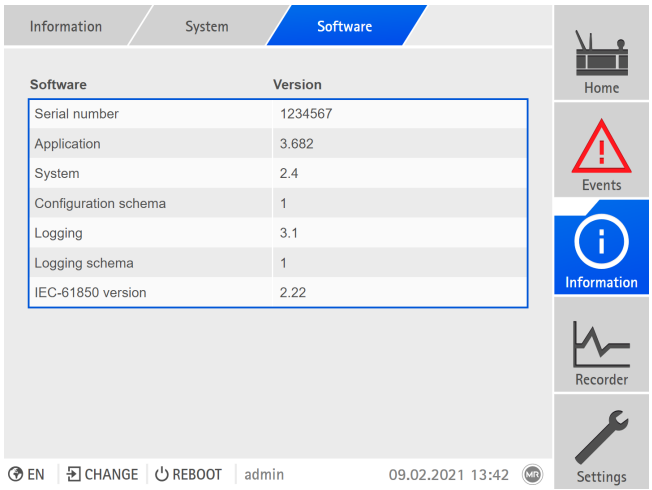

Figure 232: Information about the device's software

► Go to **Information > System > Software**.

9.35.3 Parallel operation

In the parallel operation menu, you can display information about the devices that are connected by CAN bus.

	Description
	Parallel operation status: ▪ Gray = Independent mode ▪ Blue = Parallel operation is active ▪ Red = Parallel operation error
CAN addr.	CAN bus address
Grp.	Parallel operation group
Method	Active parallel operation method
	Current tap position
U [V]	Voltage
I_p [%]	Active current
I_q [%]	Reactive curr.
	Blocking: ▪ Gray: Parallel operation not blocked ▪ Red: Parallel operation blocked

Table 96: Information about parallel operation

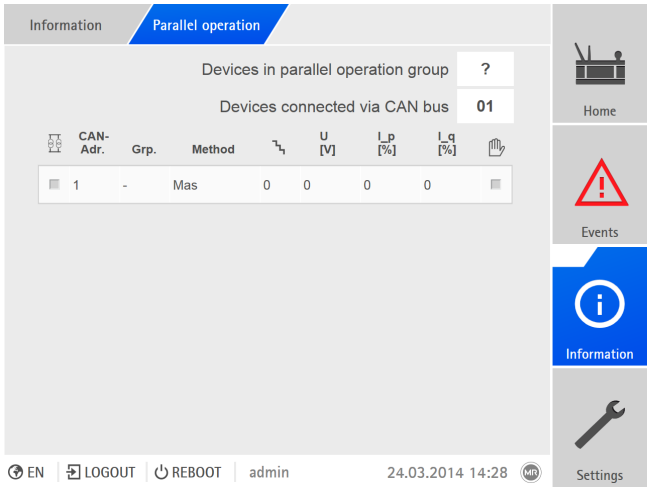

Figure 233: Parallel operation

► Go to **Information > On-load tap-changer regulator > Parallel operation**.

9.36 Import/export manager

The device is equipped with an import/export manager, which can be used to export and import various data.

To transfer the data, the following options are available:

Option	Description
USB	Data transfer via USB port on rear of CPU I assembly.
PC	Data transfer via PC using web-based visualization.

Table 97: Data transfer options

9.36.1 Exporting data

The device stops logging the measured value recorder data for the duration of the export.

You can export the following data from the device, depending on your device configuration:

Option	Description
System image	Complete image of the system (software and configuration). If you are using the option "with history", all of the event memory entries are also exported.
System configuration	System configuration
Customer program	Customer program export (TPLE).
Event memory	All event memory entries.
Recorder	Measured value memory export.
Parameter list	Parameter list with descriptive text and values (min, max, current).
Event list	Complete list of all possible events.
SCADA configuration	Control system configuration (e.g. ICD file for IEC 61850).
Operating Instructions	Operating instructions, protocol specifications.
Settings	Configuration of parameters and events.
Data point configuration	Data point configuration of the control system.
Sensor bus device description	Sensor description of the sensors for MR sensor bus that have been created with the sensor editor.
Service data	Device data for support through the Maschinenfabrik Reinhausen GmbH Technical Service department

Option	Description
Security log	Logbook of all instances of access and changes relating to security.
RADIUS dictionary	Dictionary for importing on a RADIUS server.

Table 98: Exporting data

Only remove the USB stick once the data transfer is complete. Otherwise data may be lost.

To export data, proceed as follows:

1. Go to **Settings > Export**.
2. Select the desired option for the export.

9.36.2 Importing data (software version 3.44 and later)

You can import the following data:

Option	Description
System image	Complete image of the system (software and configuration), with or without history.
Settings	All device settings: ▪ Parameter settings ▪ Event settings ▪ Administrative settings (users, access rights) The settings can also be imported from another device.
Language	Import of additional languages. You can install a maximum of 5 different languages on the device. If 5 languages are already installed, you will be asked to delete one during the import process.
SSL certificate	Import of an SSL certificate with associated key: ▪ Server certificate (.crt + .pem) ▪ Client certificate (.crt + .pem) ▪ Client CA (.crt) For the import, you will have to compress the certificate (*.crt) and key (*.pem) in a zip file. You can import certificates with the following key authentication: ▪ RSA with 1024 bits ▪ ECDSA with 256 bits ("secp256r1" or "prime256v1" curve).
Data point configuration	Data point configuration import

Option	Description
SCD import	Control system configuration import
TPLE	Customer program import (TPLE).

Table 99: Importing data

NOTICE

Damage to the file system!

The file system can become damaged due to an incorrect data transmission process. A damaged file system can lead to the device no longer being functional.

► Do not disconnect the device from the power supply during the import.

► During the import, do not remove the USB stick or disconnect the network connection.

To import data, proceed as follows:

1. Go to **Settings > Import**.
2. Select the desired option for data transmission (PC or USB).
3. Select the file to be imported.
   ⇨ The file is checked.
4. Press the **Import** button.

⇨ The data is imported, then the device is restarted.

9.37 Configuring media converter with managed switch

Observe the following information on configuring the media converter with managed switch SW 3-3. Use the following browser to call up web-based visualization:

- Firmware version 02.0.01: Internet Explorer 11
- Firmware version 07.1.00 or higher: HTML5-compatible browser, e.g., Google Chrome

9.37.1 Commissioning

Before integrating the Ethernet switch into your network, you must review the most important settings and adjust them if necessary. During this process, follow the information outlined in this chapter for commissioning the Ethernet switch.

Establishing a connection to the web-based visualization

The Ethernet switch is supplied with the following factory default settings: IP address 192.168.1.1; subnet mask 255.255.255.0; gateway address 0.0.0.0.

For commissioning the Ethernet switch, proceed as follows:

1. Establish connection with a computer via an Ethernet connection.
2. Configure the computer so that it is in the same subnet as the Ethernet switch.
3. Access the IP address 192.168.1.1 using a browser.
4. Login with the user information (login = admin; password = private). Switch the language if necessary (German/English).

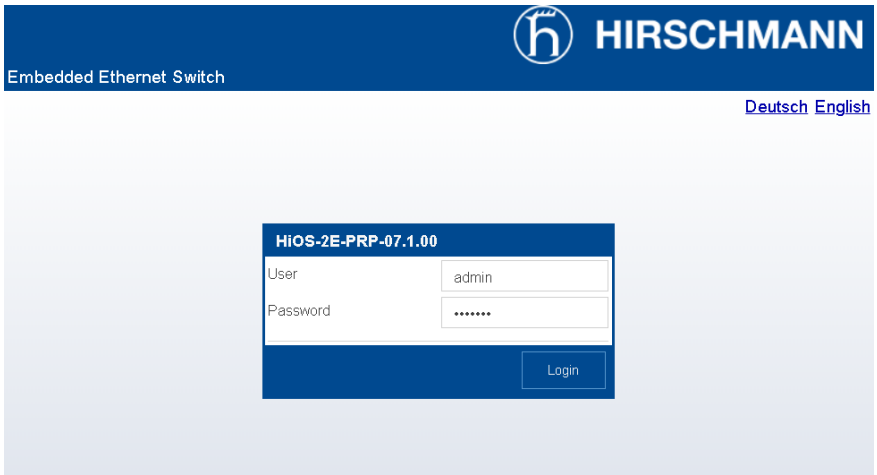

Figure 234: Login using a web interface

Changing the user name and password

Disabling unnecessary services

NOTICE

Damage to the device

If you disable all services, you will no longer be able to access the device later to configure or update it.

► Leave at least one service for secure communication enabled (e.g., SNMPv3, SSH or HTTPS).

1. Go to **Device security > Management Access**.

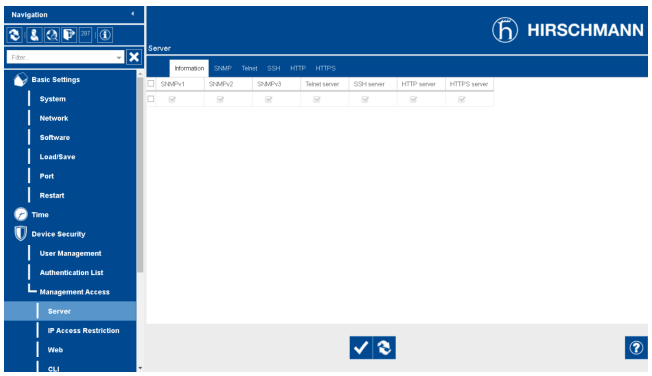

Figure 235: Management Access

2. Select the tab for the desired service.
3. Select **Off** to disable a service or use the checkboxes to disable sub-functions of a service.
4. Click on the button or **Write** to save the change.

Setting network settings

1. Go to **Basic settings > Grid > Global**.

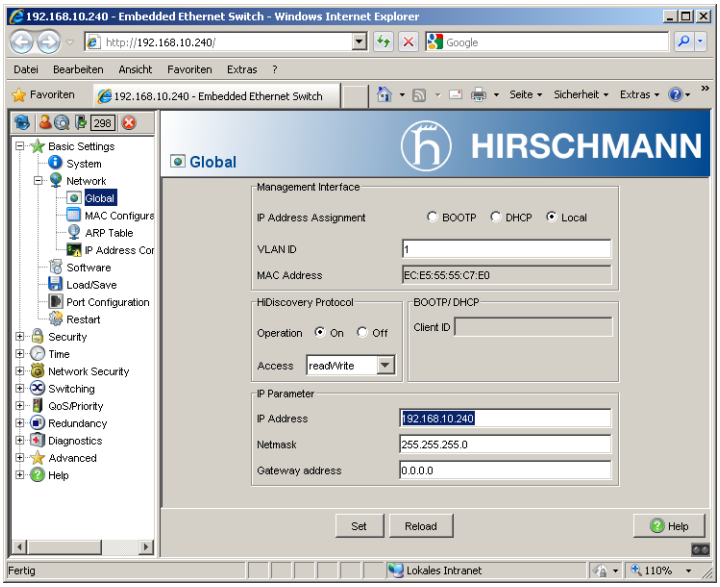

Figure 236: Network settings

2. Adjust the network settings and click on the button or **Write** to save the changes.
3. In the **Basic settings > Load/Save** menu, click on the **Save** button to permanently store the settings.
4. If necessary, establish a connection to the new IP address to continue changing settings. Click on the **Help** button to find out more information.
5. Attach the cable for connecting to your network.

9.37.2 Configuration

You can use the web interface to configure the Ethernet switch. You can find more information about the configuration using the online help in the web interface.

Calling up the web interface

To access the web interface, follow the instructions outlined in the Commissioning [▶Section 9.37.1, Page 326] chapter.

Selecting the redundancy protocol

To select the redundancy protocol, proceed as follows:

1. Go to **Redundancy**.
2. Select the specific menu item for the redundancy protocol.
3. Change the configuration and select the **On** option in the **Function** group field.

4. In the **Basic settings > Load/Save** menu, click on the **Save** button to permanently store the settings.

Deactivate the unused redundancy protocols by selecting the **Off** option in the **Function** group field.

Resetting to factory settings

To reset the Ethernet switch to its factory default settings, proceed as follows:

1. Go to **Basic settings > Load/Save** and click on the **Reset to factory defaults…** button.
2. Reestablish the connection to the IP address of 192.168.1.1 if necessary.
3. Set the MR factory settings in accordance with the following table.

Menu	Parameter	MR factory setting
Redundancy	Redundancy protocol	PRP
Security > Pre-login banner	Login banner	MR-specific
Basic setting > Port configuration	Ports 5+6	Deactivated

Table 100: MR factory setting

9.37.3 Updating the Firmware

To ensure the IT security of the device, we recommend always keeping the SW 3-3 assembly firmware up to date. The SW 3-3 assembly is based on the Belden/Hirschmann EES-25 product. Therefore, follow the information in the security bulletins published by Belden/Hirschmann:

- https://www.belden.com/security-assurance

You can obtain the firmware updates directly from the manufacturer Belden/Hirschmann:

- https://catalog.belden.com/index.cfm?event=pd&p=PF_942050003

Install the updates as described by the manufacturer Belden/Hirschmann.

Installing firmware updates

To update the firmware, proceed as follows:

✓ The firmware update has been downloaded.

1. Establish connection with a computer via an Ethernet connection.
2. Configure the computer so that it is in the same subnet as the Ethernet switch.
3. Access the IP address `192.168.1.1` using a browser.

4. Log in with the user data (default settings: login = `admin`; password = `private`). Switch the language if necessary (German/English).
5. Go to **Basic settings > Software** and click on the […] button or .

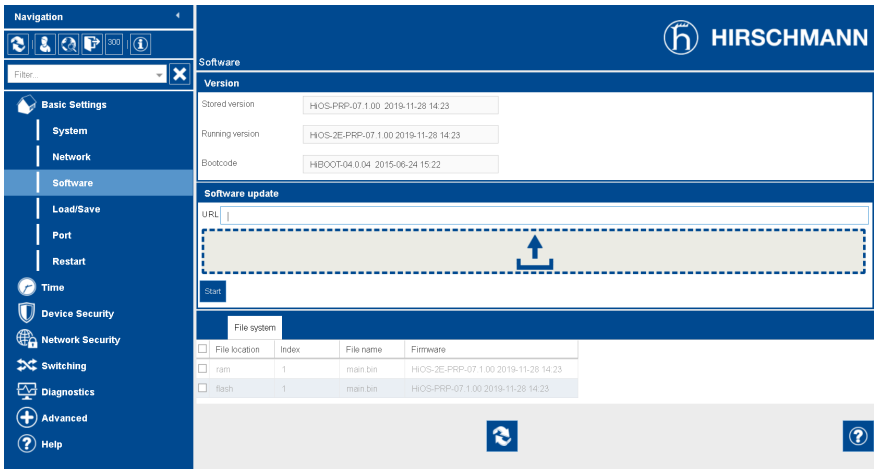

Figure 237: Uploading a firmware update

6. Select the downloaded firmware update file. When doing so, ensure you select the correct version (HSR or PRP).

   ⇨ The file will be loaded onto the assembly.
7. Click on the **update** or **start** button to start the update.

   ⇨ The firmware will be updated.
8. Once the update has been completed successfully: Go to **Basic setting > Restart** and click on the **Cold start** button to restart the assembly.

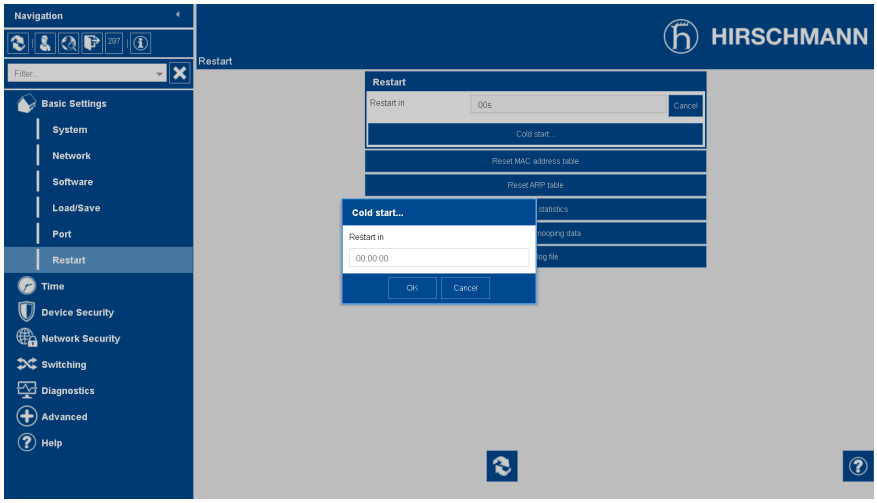

Figure 238: Restarting the assembly

9. Disconnect the PC connection via the Ethernet connection and re-establish connection to your network.

9.38 Transformer Personal Logic Editor (TPLE)

You can use the Transformer Personal Logic Editor (TPLE) function to program simple logical links via the web-based visualization. You can also link the inputs and outputs available on the device using function modules.

Note that the device does not meet the requirements of a protective device. Therefore, do not use TPLE to produce protective functions.

9.38.1 Function

9.38.1.1 Function groups

There are 10 function groups available that you can use to combine various sub-tasks into one function. In one function group, you can link up to 12 function modules with variables. You can rename function groups and activate or deactivate them individually.

9.38.1.2 Variables

The following types of variables for information processing are available for TPLE:

- Event inputs: You can use all the device's events as inputs for a function.
- Event outputs: 100 generic events are available as outputs for functions.
- Binary inputs: You can use all the device's configured digital inputs and up to 42 generic inputs of the device as inputs for a function.
- Binary outputs: You can use all the device's configured digital outputs and up to 20 generic outputs of the device as outputs for a function. If there is a control system present, 10 generic control system messages are available.
- Analog inputs: You can use all the device's configured analog inputs as inputs for a function.
- Binary flags: You can use up to 100 binary flags as variables to store intermediate values. You can use binary flags as inputs and outputs for a function.
- Analog flags: You can use up to 50 analog flags as variables to store intermediate values. You can use analog flags as inputs and outputs for a function.
- Discrete inputs: You can use all the device's available discrete inputs as inputs for a function.

9.38.1.3 Function modules

TPLE provides various function modules for processing the information.

9.38.1.3.1 AND

Description	AND, logical AND link
Inputs	Input 1…4 (BOOL)
Outputs	Output (BOOL)
Parameter	None
Function	If all configured inputs are TRUE, the output is TRUE, otherwise it is FALSE.
Initial state	All inputs and outputs are FALSE. Non-configured inputs are assumed to be TRUE. If no input is configured, the module is not run so it remains in its initial state.

Table 101: AND function module

9.38.1.3.2 NAND

Description	NAND, logical NOT-AND link
Inputs	Input 1…4 (BOOL)
Outputs	Output (BOOL)
Parameter	None
Function	If all configured inputs are TRUE, the output is FALSE, otherwise it is TRUE.
Initial state	All inputs and outputs are FALSE. Non-configured inputs are assumed to be TRUE so that they have no impact on the output. If no input is configured, the output therefore remains in the initial state of FALSE.

Table 102: NAND function module

9.38.1.3.3 OR

Description	OR, logical OR link
Inputs	Input 1…4 (BOOL)
Outputs	Output (BOOL)
Parameter	None
Function	If one of configured inputs is TRUE, the output is TRUE, otherwise it is FALSE.
Initial state	All inputs and outputs are FALSE. Non-configured inputs are assumed to be FALSE.

Table 103: OR function module

9.38.1.3.4 NOR

Description	NOR, logical NOT-OR link
Inputs	Input 1…4 (BOOL)
Outputs	Output (BOOL)
Parameter	None
Function	If all configured inputs are FALSE, the output is TRUE, otherwise it is FALSE.
Initial state	All inputs and outputs are FALSE. Non-configured inputs are assumed to be FALSE so that they have no impact on the output. If no input is configured, the output remains in the initial state of FALSE anyway.

Table 104: NOR function module

9.38.1.3.5 XOR

Description	XOR, logical EXCLUSIVE-OR link
Inputs	Input 1…2 (BOOL)
Outputs	Output (BOOL)
Parameter	None
Function	If an odd number of inputs is TRUE, the output is TRUE, otherwise it is FALSE.
Initial state	All inputs and outputs are FALSE. Non-configured inputs are assumed to be FALSE so that they have no impact on the output. If no input is configured, the output therefore remains in the initial state of FALSE.

Table 105: XOR function module

9.38.1.3.6 NOT

Description	NOT, logical NOT link
Inputs	Input (BOOL)
Outputs	Output (BOOL)
Parameter	None
Function	If the input is TRUE, the output is FALSE, otherwise it is TRUE.
Initial state	All inputs and outputs are FALSE. If the input is not configured, it is assumed to be TRUE so that the output remains in the initial state of FALSE.

Table 106: NOT function module

9.38.1.3.7 Current impulse relay

Description	RS, current impulse relay
Inputs	Trigger (BOOL) Set (BOOL) Reset (BOOL)
Outputs	Output (BOOL)
Parameter	None
Function	If the Reset input is TRUE, Output forcibly becomes FALSE. If the Reset input is FALSE and the Set input is TRUE, Output forcibly becomes TRUE. If the Reset and Set inputs are FALSE, the status of Output changes when there is a rising edge at the Trigger input. If there is no edge at the Trigger input, Output remains unchanged.
Initial state	All inputs and outputs are FALSE. Non-configured inputs are assumed to be FALSE so that they have no impact on the output.

Table 107: Current impulse relay function module

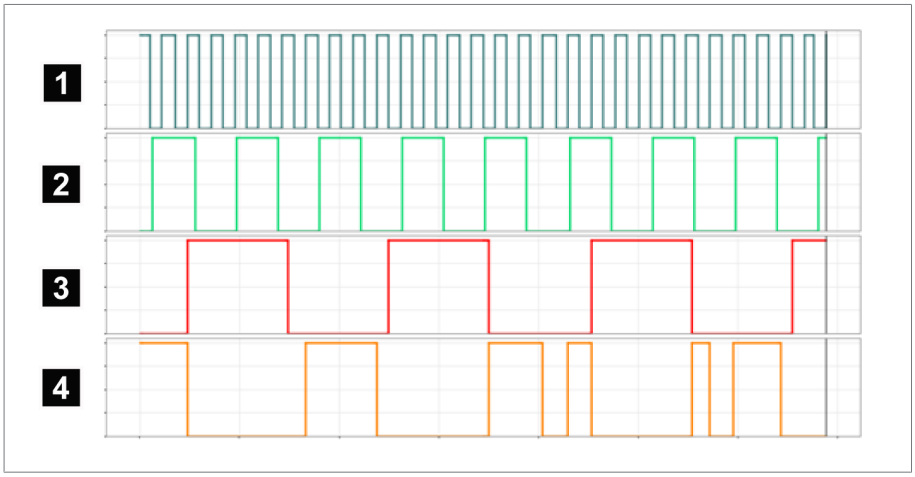

Figure 239: Example of RS

1	Trigger	2	Set
3	Reset	4	Output

9.38.1.3.8 Switch-on delay

Description	TON, switch-on delay
Inputs	Input (BOOL)
Outputs	Output (BOOL)
Parameter	Time ms (UINT32), 1...1,000,000, default = 1,000

Function	If Input has a rising edge, the internal timer is set to zero and starts to run. When the internal timer has reached or exceeded the parameter value, Output becomes TRUE and the counter stops running. If Input becomes FALSE, Output also instantly becomes FALSE. If the value of Time_ms is less than the cycle time, the cycle time applies instead.
Initial state	All inputs and outputs are FALSE.

Table 108: Switch-on delay function module

9.38.1.3.9 Switch-off delay

Description	TOFF, switch-off delay
Inputs	Trigger (BOOL) Reset (BOOL)
Outputs	Output (BOOL)
Parameter	Time ms (UINT32), 1...1,000,000, default = 1,000
Function	If Input becomes TRUE, Output also instantly becomes TRUE, this condition takes priority. If Input has a falling input, the internal timer is set to zero and starts to run. When the internal timer has reached or exceeded the parameter value, Output becomes FALSE and the counter stops running. If Input is FALSE and the Reset input becomes TRUE, Output instantly and forcibly becomes FALSE and the internal timer is set to the configured desired value. If the value of Time_ms is less than the cycle time, the cycle time applies instead.
Initial state	All inputs and outputs are FALSE.

Table 109: Switch-off delay function module

9.38.1.3.10 Pulse

Description	PLSE, pulse
Inputs	Trigger (BOOL)
Outputs	Output (BOOL)
Parameter	Time ms (UINT32), 1...1,000,000, default = 1,000

Function	If there is a rising edge at the Trigger input at any time, the internal timer is set to zero and starts to run, the output becomes TRUE. If the Trigger input becomes FALSE again during the pulse time, this has no impact on the expiration of the pulse time. Once the internal timer has expired, the output becomes FALSE. If the value of Time_ms is less than the cycle time, the cycle time applies instead.
Initial state	All inputs and outputs are FALSE.

Table 110: Pulse function module

9.38.1.3.11 Symmetrical pulse generator

Description	CLCK, symmetrical pulse generator
Inputs	Enable (BOOL)
Outputs	Output (BOOL)
Parameter	Time ms (UINT32), 1...1,000,000, default = 1,000
Function	The internal timer runs for a long as Enable is TRUE. When the internal timer has reached or exceeded the configured time value, the status of the output changes and the timer is restarted. The configured time therefore corresponds to half the period duration of the resulting signal. If the Enable input becomes FALSE, the output also instantly becomes FALSE and the internal timer is reset. If the value of Time_ms is less than the cycle time, the cycle time applies instead.
Initial state	All inputs and outputs are FALSE.

Table 111: Symmetrical pulse generator function module

9.38.1.3.12 Counter (forwards/backwards)

Description	COUNT, incremental counter
Inputs	Trigger (BOOL) Direction (BOOL) Reset (BOOL) Lock (BOOL)
Outputs	SINT32 (SINT32) REAL32 (REAL32)
Parameter	Reset value (SINT32), -10,000,000… +10,000,000, default = 0

Function	If there is a rising edge at Reset, the output value is set to the value of the Reset value parameter. A rising edge at Reset takes priority over all other inputs. For as long as Lock is TRUE, the pulse signal is not evaluated and the counter reading is retained. If no input is assigned, the default value FALSE is assumed. When Direction input = FALSE, the output value is incremented by one with every rising edge at the Trigger input. When Direction input = TRUE, the output value is decremented by one with every rising edge at the Trigger input.
Initial state	All inputs and outputs are zero or FALSE.

Table 112: Counter (forwards/backwards) function module

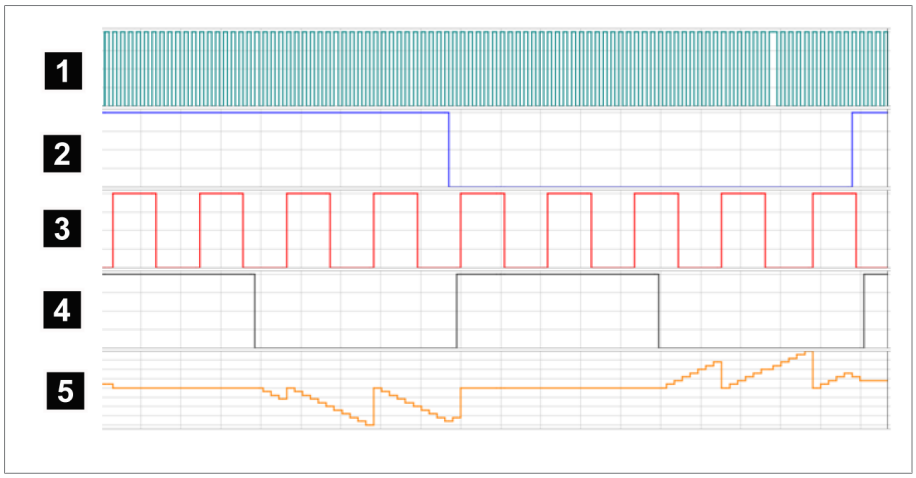

Figure 240: Example of COUNT

1	Trigger	2	Direction
3	Reset	4	Lock
5	Output		

9.38.1.3.13 Analog threshold value switch with hysteresis

Designation	THRES, threshold value switch with hysteresis
Inputs	Input (REAL32)
Outputs	Output (BOOL) Error (BOOL)
Parameter	On Limit (REAL32), -10,000,000… +10,000,000, default = 10,000,000 Off Limit (REAL32), -10,000,000 … +10,000,000, default = -10,000,000

Function	On Limit ≥ Off Limit setting: ▪ If the value of Input is greater than On Limit, Output becomes TRUE. ▪ If the value of Input is less than or equal to Off Limit, Output becomes FALSE. On Limit < Off Limit setting: ▪ If the value of Input is greater than On Limit and at the same time less than Off Limit, Output becomes TRUE. Otherwise, the Output is FALSE.
Initial state	All inputs and outputs are zero or FALSE.

Table 113: Analog threshold value switch with hysteresis function module

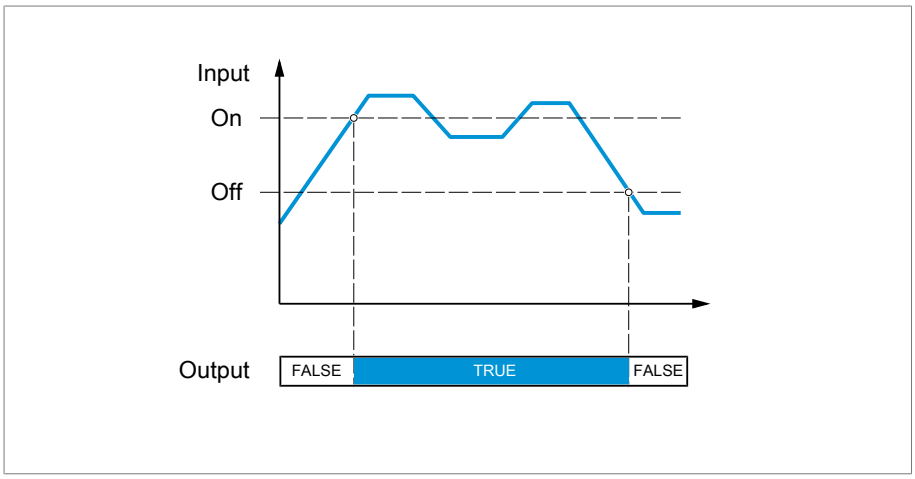

Figure 241: Analog threshold value switch with the On Limit > Off Limit setting

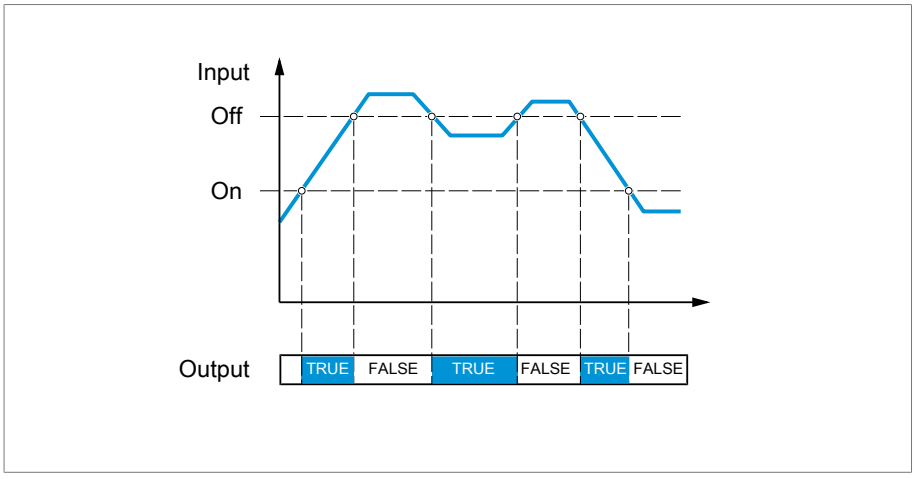

Figure 242: Analog threshold value switch with the On Limit < Off Limit setting

9.38.1.3.14 Analog multiplication

Description	MUL, analog multiplication
Inputs	Value (REAL32) Multiplier (REAL32)
Outputs	Result (REAL32) Overflow (BOOL)
Parameter	Constant multiplier (REAL32), -1,000,000...+1,000,000; default = 1
Function	Result = Value * Multiplier * Constant multiplier If the REAL32 range of numbers is exceeded, the Overflow output becomes TRUE.
Initial state	All inputs and outputs are zero or FALSE.

Table 114: Analog multiplication function module

9.38.1.3.15 Analog division

Description	DIV, analog division
Inputs	Divident (REAL32) Divisor (REAL32)
Outputs	Result (REAL32) DivByZero (BOOL) Overflow (BOOL)
Parameter	Constant divisor (REAL32), -1,000,000...+1,000,000; default = 1
Function	Result = Dividend / Divisor / Constant Divisor If dividing by zero, the DivByZero output becomes TRUE and Result is set to zero. If the REAL32 range of numbers is exceeded, the Overflow output becomes TRUE and Result is set to zero.
Initial state	All inputs and outputs are zero or FALSE.

Table 115: Analog division function module

9.38.1.3.16 Analog addition

Description	ADD, analog addition
Inputs	Input 1 (REAL32) Input 2 (REAL32)
Outputs	Result (REAL32) Overflow (BOOL)
Parameter	Offset (REAL32), -1,000,000...+1,000,000; default = 0

Function	Result = Input 1 + Input 2 + Offset If the REAL32 range of numbers is exceeded, the Overflow output becomes TRUE.
Initial state	All inputs and outputs are zero or FALSE.

Table 116: Analog addition function module

9.38.1.3.17 Analog subtraction

Description	SUB, analog subtraction
Inputs	Input 1 (REAL32) Input 2 (REAL32)
Outputs	Result (REAL32) Overflow (BOOL)
Parameter	Offset (REAL32), -1,000,000...+1,000,000; default = 0
Function	Result = Input 1 - Input 2 – Offset If the REAL32 range of numbers is exceeded, the Overflow output becomes TRUE.
Initial state	All inputs and outputs are zero or FALSE.

Table 117: Analog subtraction function module

9.38.1.3.18 Rising edge

Description	RTRG, rising edge trigger
Inputs	Input (BOOL)
Outputs	Output (BOOL)
Parameter	-
Function	When the input changes from FALSE to TRUE, the output becomes TRUE for one cycle of the function group and then changes back to FALSE.
Initial state	All inputs and outputs are FALSE.

Table 118: Rising edge function module

9.38.1.3.19 Falling edge

Description	FTRG, falling edge trigger
Inputs	Input (BOOL)
Outputs	Output (BOOL)
Parameter	-
Function	When the input changes from TRUE to FALSE, the output becomes TRUE for one cycle of the function group and then changes back to FALSE.
Initial state	All inputs and outputs are FALSE.

Table 119: Falling edge function module

9.38.1.3.20 Average value

Description	AVRG, average value
Inputs	Input (REAL32) Enable (BOOL) Reset (BOOL) Autorepeat (BOOL)
Outputs	Average (REAL32) Done (BOOL) Started (BOOL) SampleCount (UINT32)
Parameter	Time ms (UINT32): 1...2,000,000,000, default = 10,000 Sample time ms (UINT32): 1...10,000,000, default = 1,000
Function	Averaging starts with a rising edge of Enable. This does not affect averaging which is already underway. Any output value remaining from earlier is retained. The Done output becomes FALSE, the Started output becomes TRUE. Active averaging is interrupted with a rising edge of Reset. Average is set to zero, Done and Started become FALSE. If Enable is also TRUE during the rising Reset edge, a new averaging process is started. Done becomes TRUE and Started becomes FALSE once averaging is complete. Done remains TRUE until a Reset is detected or new averaging is triggered by a rising edge of Enable. If AutoRepeat and Enable are TRUE, a new averaging process is automatically started each time averaging is completed. Done is set for one cycle each time averaging is completed. The SampleCount output states how many samples have already been recorded. Sample time ms is the desired sample time in milliseconds. It is rounded up to the next whole multiple of the task cycle time and has a lower limit of at least one task cycle time. Time ms is the time period desired for averaging. It is internally rounded up to the next whole multiple of the sample time and has a lower limit of at least one sample time.
Initial state	All inputs and outputs are FALSE.

Table 120: Average value function module

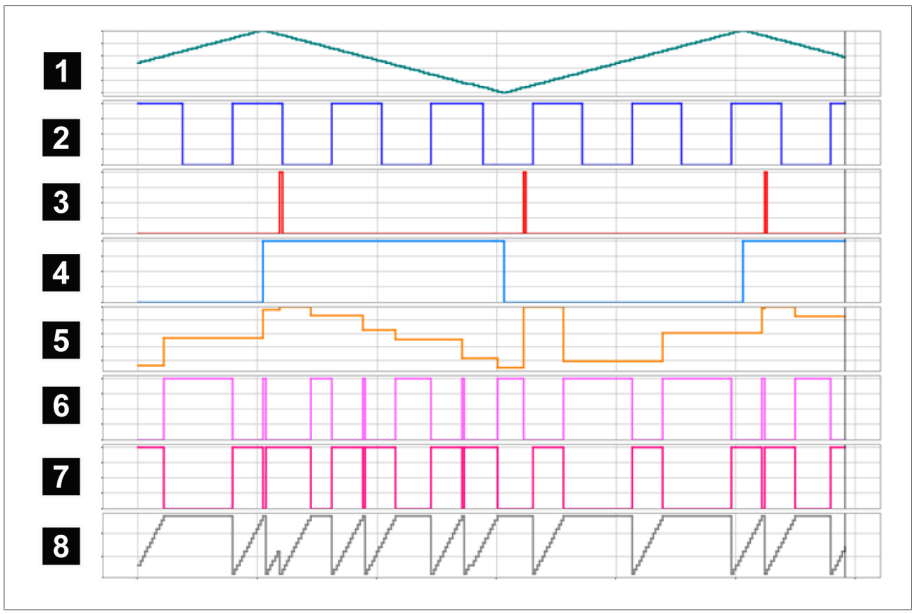

Figure 243: AVRG

1	Input	2	Enable
3	Reset	4	AutoRepeat
5	Average	6	Done
7	Started	8	SampleCount

9.38.1.3.21 Scaling

Description	SCAL, scaling
Inputs	Input (REAL32)
Outputs	Output (REAL32) Error (BOOL)
Parameter	Min In (REAL32): -10,000,000...+10,000,000, default = -10,000,000 Max In (REAL32): -10,000,000...+10,000,000, default = +10,000,000 Min Out (REAL32): -10,000,000...+10,000,000, default = -10,000,000 Max Out (REAL32): -10,000,000...+10,000,000, default = +10,000,000

Function	Output is calculated using the following formula: `Output = Min Out + (Max Out - Min Out) x (Input - Min In) / (Max In - Min In)` Output is set to 0 and Error = TRUE when: ▪ Input is not within the parameters Min In and Max In ▪ Min In is greater than Max In ▪ Min Out is greater than Max Out ▪ Max In is the same size as Min In (division by zero)
Initial state	All inputs and outputs are FALSE.

Table 121: Scaling function module

9.38.1.3.22 Bridge

Designation	BRDG, Bridge
Inputs	Analog Input (REAL32) Digital Input (BOOL)
Outputs	Analog Output (REAL32) Digital Output (BOOL)
Parameter	-
Function	Copies the value of Analog Input to Analog Output and Digital Input to Digital Output.
Initial state	All inputs and outputs are zero or FALSE.

Table 122: Bridge function module

9.38.1.3.23 RTOI

Description	RTOI, Real-to-Integer conversion
Inputs	Analog Input (REAL32)
Outputs	Analog Output (SINT32)
Parameter	-
Function	Copies the value of Analog Input to Analog Output and converts REAL32 to SINT32.
Initial state	All inputs and outputs are zero.

Table 123: RTOI function module

9.38.1.3.24 ITOR

Description	ITOR, Integer-to-real conversion
Inputs	UINT32 (UINT32) SINT32 (SINT32)
Outputs	Output U (REAL32) Output S (REAL32)

Parameter	-
Function	The value of UINT32 is output converted to Output U, the value of SINT32 is output converted to Output S.
Initial state	All inputs and outputs are zero.

Table 124: NAND function module

9.38.2 Configuring TPLE

You can configure TPLE on a PC using the web-based visualization. Only a live view is available on the device's display. To configure TPLE, you have to hold the role of Administrator or Parameterizer.

When in delivery status, you can log in as the administrator as follows:

- User name: `admin`
- Password: `admin`

9.38.2.1 Editing variables

You can adapt the name and description of the following variables:

- Binary inputs
- Binary outputs
- Analog inputs
- Binary flags
- Analog flags
- Discrete inputs

The names and descriptions of the generic events can also be adapted like all other device events. Note the Event management [▶ Section 9.33, Page 309] section.

The permissible number of characters is limited:

- Name: Maximum of 20 characters
- Description: Maximum of 80 characters

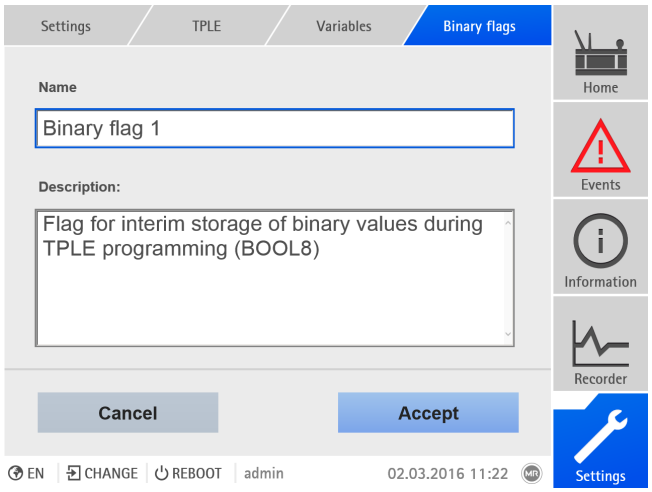

Figure 244: Editing variable

To edit the variable, proceed as follows:

1. Go to **Settings > TPLE > Variables**.
2. Select the **variable** you want.
3. Enter the **name** and **description**.
4. Press the **Accept** button to save the modified variable.

9.38.2.2 Creating functions

Within one function group, you can create up to 12 function modules to depict one function. To create, edit or delete a function, you have to call up the function group you want. To do so, proceed as follows:

1. Go to **Settings > TPLE > Function group**.
2. Select the **function group** you want.

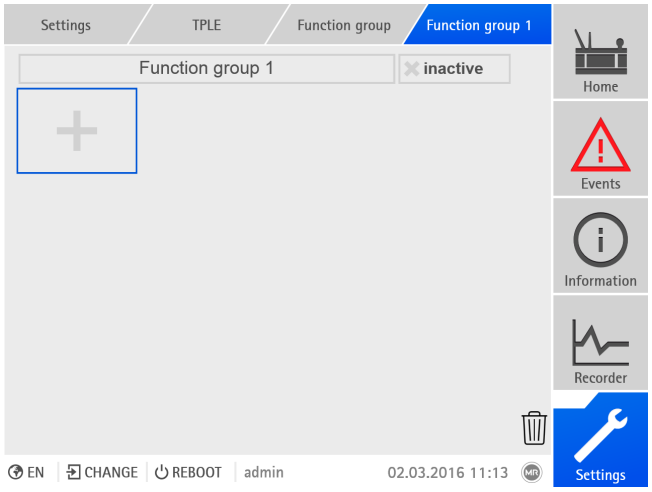

Figure 245: Function group

Creating function modules

To create a function module, proceed as follows:

► Press the **+** button to create a new function module.

Deleting function modules

To delete a function module, proceed as follows:

► Drag the desired **function module** to the trash can using drag & drop.

Sorting function modules

To sort a function module, proceed as follows:

► Drag the desired **function module** to the desired position using drag & drop.

Editing function module

To edit a function module, proceed as follows:

1. Select the desired **function module**.
2. Press the **Edit** button.

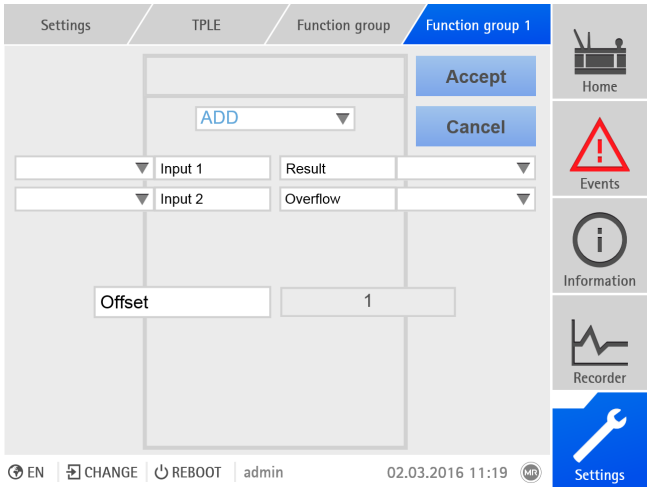

Figure 246: Editing function module

3. Select the **inputs** and **outputs** you want and set the **parameters**.
4. Press the **Accept** button to save the change to the function module.

9.38.2.3 Renaming function group

If necessary, you can rename the function group in order to better assign it.

To rename a function group, proceed as follows:

1. Go to **Settings > TPLE > Function group**.
2. Select the **function group** you want.

3. Select the text field with the **name of the function group** and enter the name you want.

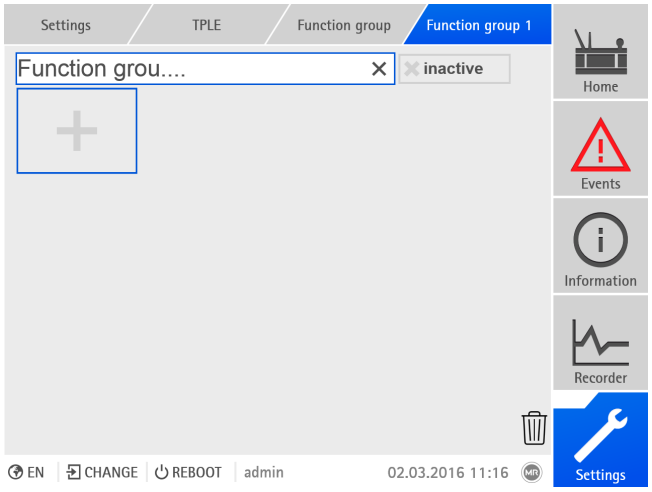

Figure 247: Renaming function group

4. Press [Enter] to accept the change.

9.38.2.4 Activating/deactivating function group

You can fully activate or deactivate a function group. When you deactivate a function group, none of the function group's function modules are processed.

To activate/deactivate a function group, proceed as follows:

1. Go to **Settings > TPLE > Function group**.
2. Select the **function group** you want.
3. Press the **Inactive** button.

⇨ Red **X**: Function group is inactive; gray **X**: Function group is active.

10 Fault elimination

This chapter describes how to rectify simple operating faults.

10.1 Motor-drive unit

Characteristics/details	Cause	Remedy
No tap-change operation possible ▪ Motor status "Error"	Motor-drive unit not synchronized	Synchronize motor-drive unit [▶Section 9.19, Page 210].
No tap-change operation possible	Motor voltage outside the permissible range	Check the voltage supply.
No tap-change operation possible ▪ Event "Blocking the drives" active.	Mechanical blocking of the motor-drive unit or the on-load tap-changer	Contact Reinhausen Manufacturing.
No tap-change operation possible ▪ Event *VIM module switched off* active.	Monitoring system (VIM) not ready for operation. No signal at the input *VIM status*	Check the function and wiring of the monitoring system (VIM).
No tap-change operation possible ▪ Event *VIM signal error (yellow)* active.	Signal is present at the input *VIM signal error (yellow)*	Check the function of the monitoring system (VIM) and acknowledge errors with the RESET key.
No tap-change operation possible Event *VIM vacuum interrupter error (red)* active.	Signal present at the input *VIM vacuum interrupter error (red)*	Check the function of the monitoring system (VIM) and acknowledge errors with the RESET key.
No tap-change operation possible ▪ Event *OLTC rotation direction error* active	Position sensor reporting an error.	Contact Reinhausen Manufacturing.
No tap-change operation possible ▪ Status display for OLTC-PreCheck is red	The OLTC-PreCheck function is active and one of the limit values has been exceeded.	Check measured values: ▪ On-load tap-changer oil level ▪ On-load tap-changer oil temperature ▪ Transformer current
		Check the configuration
	Wiring error	Check wiring as per connection diagram.
	Sensor defective	Replace sensor.
No tap-change operation possible ▪ No signal from cam switch S13	Wiring error	Check wiring as per connection diagram.
	Cam switch S13 is defective	Contact Reinhausen Manufacturing.
No tap-change operation possible	Motor protection device defective	Contact Reinhausen Manufacturing.

Characteristics/details	Cause	Remedy
Synchronizing the motor-drive unit not possible	Wiring error	Check wiring as per connection diagram.
	Tap position indicator not connected.	Connect the tap position indicator according to the connection diagram.
	Mechanical blocking of the motor-drive unit or the on-load tap-changer	Contact Reinhausen Manufacturing.
Synchronizing the motor-drive unit not possible ▪ Motor-drive unit switching in the wrong direction	Wiring error (polarity reversal)	Check wiring as per connection diagram.

Table 125: Motor-drive unit

10.2 Human-machine interface

Characteristics/details	Cause	Remedy
No display/screen is loaded	Power supply interrupted.	Check the voltage supply.
	Error when loading the current screen in the browser.	Press [F5] key to update the screen.
	Fuse faulty.	Contact Maschinenfabrik Reinhausen.
Connection cannot be established with visualization	Connection cable defective.	Check connection cable.
	IP addresses of visualization and SCADA are in the same subnet.	Check the setting of the IP addresses of the device and correct where necessary.
	PC not in same subnet as visualization.	Check the setting of the IP addresses of the device and PC and correct where necessary.
Browser displays an SSL warning when establishing a connection to the visualization.	The browser does not accept an SSL connection with a signed certificate that is non-public (this is the default status of the device).	Import signed SSL certificate or adjust browser settings.
	The device SSL certificate has expired.	Import SSL certificate.
	The device date/time is set incorrectly.	Set the date and time.
		When using time synchronization via SNTP: check SNTP server.
	IP address of interface ETH2.2 has changed.	Import SSL certificate with new IP address ("Alternative applicant name").

Table 126: Human-machine interface

10.3 Other faults

If you cannot resolve a problem, please contact Maschinenfabrik Reinhausen. Please have the following data to hand:

- Serial number
  - Nameplate
  - Info screen
- Software version [▶Section 9.35, Page 321]

Please provide answers to the following questions:

- Has the software been updated?
- Has there previously been a problem with this device?
- Have you previously contacted Maschinenfabrik Reinhausen about this issue? If yes, then who was the contact?

11 Inspection and maintenance

This chapter contains information about inspecting and maintaining the product.

11.1 Maintaining motor-drive unit

Regular maintenance is not required. We do however recommend that you contact Maschinenfabrik's Technical Service team after 600,000 tap-change operations.

When maintaining the on-load tap-changer, a function test should also be carried out on the motor-drive unit.

11.2 Cleaning motor-drive unit

You can clean the gear motor and housing of the control cabinet with a dry cloth. You can clean the inside of the control cabinet with a dry cloth.

12 Event messages

No.	Name	Description	Remedy
1	Limit value U<	Value has fallen below the limit value for undervoltage U<.	Check the current operating conditions of the transformer and the set U< parameters.
2	Limit value U<<	Value has fallen below the limit value for undervoltage U<<.	Check the current operating conditions of the transformer and the set U<< parameters.
3	Limit value U>	The limit value for overvoltage U> has been exceeded.	Check the current operating conditions of the transformer and the set U> parameters.
4	Limit value U>>	The limit value for overvoltage U>> has been exceeded.	Check the current operating conditions of the transformer and the set U>> parameters.
5	Limit value I<	Value has fallen below the limit value for undercurrent I<.	Check the current operating conditions of the transformer and the set I< parameters.
6	Limit value I<<	Value has fallen below the limit value for undercurrent I<<.	Check the current operating conditions of the transformer and the set I<< parameters.
7	Limit value I>	The limit value for overcurrent I> has been exceeded.	Check the current operating conditions of the transformer and the set I> parameters.
8	Limit value I>>	The limit value for overcurrent I>> has been exceeded.	Check the current operating conditions of the transformer and the set I>> parameters.
9	Limit value S<	Value has fallen below the limit value for apparent power S<.	Check the current operating conditions of the transformer and the set S< parameters.
10	Limit value S<<	Value has fallen below the limit value for apparent power S<<.	Check the current operating conditions of the transformer and the set S<< parameters.
11	Limit value S>	The limit value for apparent power S> has been exceeded.	Check the current operating conditions of the transformer and the set S> parameters.
12	Limit value S>>	The limit value for apparent power S>> has been exceeded.	Check the current operating conditions of the transformer and the set S>> parameters.
13	Limit value P<	Value has fallen below the limit value for active power P<.	Check the current operating conditions of the transformer and the set P< parameters.
14	Limit value P<<	Value has fallen below the limit value for active power P<<.	Check the current operating conditions of the transformer and the set P<< parameters.
15	Limit value P>	The limit value for active power P> has been exceeded.	Check the current operating conditions of the transformer and the set P> parameters.
16	Limit value P>>	The limit value for active power P>> has been exceeded.	Check the current operating conditions of the transformer and the set P>> parameters.
17	Limit value Q<	Value has fallen below the limit value for reactive power Q<.	Check the current operating conditions of the transformer and the set Q< parameters.
18	Limit value Q<<	Value has fallen below the limit value for reactive power Q<<.	Check the current operating conditions of the transformer and the set Q<< parameters.
19	Limit value Q>	The limit value for reactive power Q> has been exceeded.	Check the current operating conditions of the transformer and the set Q> parameters.
20	Limit value Q>>	The limit value for reactive power Q>> has been exceeded.	Check the current operating conditions of the transformer and the set Q>> parameters.
21	Limit value cos f <	Value has fallen below the limit value for power factor cos f<.	Check the current operating conditions of the transformer and the set cos f< parameters.

No.	Name	Description	Remedy
22	Limit value cos f <<	Value has fallen below the limit value for power factor cos f<<.	Check the current operating conditions of the transformer and the set cos f<< parameters.
23	Limit value Pos<	Value has reached or fallen below the limit value for tap position Pos<.	Check the current operating conditions of the transformer and the set Pos< parameters.
24	Limit value Pos>	Value has reached or exceeded the limit value for tap position Pos>.	Check the current operating conditions of the transformer and the set Pos> parameters.
25	Function monitoring	The control variable is outside of the bandwidth.	Check the current operating conditions of the transformer and the set bandwidth.
26	Switching direction control	The target tap position has not been reached.	Check the connections for the raise and lower contacts and the functionality of the tap-changer control.
27	Lower bandwidth limit value	Value has fallen below the lower bandwidth limit value.	The bandwidth is set too low. Check the parameter.
28	Upper bandwidth limit value	Value has exceeded the upper bandwidth limit value.	The bandwidth is set too high. Check the parameter.
32	Reversal of power flow	A reversal of power flow is present.	Check the current operating status of the transformer and the polarity of the current transformers if necessary.
33	R&X compensation calculation	R&X compensation cannot be calculated.	The set parameters do not allow a calculation of R&X compensation. Check the set parameters.
34	Z compensation calculation	Z compensation cannot be calculated.	The set parameters do not allow a calculation of Z compensation. Check the set parameters.
35	No master present	No master is present in the parallel operation group.	Specify a TAPCON® as the master for parallel operation and check whether the master is ready for operation.
36	Masters on CAN bus > 1	Several masters are present in the parallel operation group.	Ensure that just one TAPCON® is specified as the master in the parallel operation group.
37	Permitted tap difference	The permitted tap difference has been exceeded.	Check the current operating conditions of the transformers in parallel operation as well as the set parallel operation parameters of the TAPCON® units involved.
38	Tap difference to follower	A tap difference to a follower exists.	Check the current operating conditions of the transformers in parallel operation as well as the set parallel operation parameters of the TAPCON® units involved.
39	Tap difference with master	A tap difference with the master exists.	Check the current operating conditions of the transformers in parallel operation as well as the set parallel operation parameters of the TAPCON® units involved.
40	Different parallel operation methods	Different parallel operation methods have been set for multiple TAPCON® units.	Check the set parameters. Set the same parallel operation method for each TAPCON® in the parallel operation group.

No.	Name	Description	Remedy
41	Circulating reactive current blocking limit	The permitted circulating reactive current blocking limit has been exceeded.	Check the current operating conditions of the transformers in parallel operation as well as the set circulating reactive current blocking limit of the TAPCON® units involved.
42	CAN bus address	The CAN bus address is already being used for another TAPCON®.	Make sure that different CAN bus addresses are configured for each TAPCON®. Use a different CAN bus address.
43	Invalid tap position: Follower	The tap position of a follower in parallel operation is invalid.	Check the function and wiring of the follower's tap position capture. Connect as shown in the connection diagram.
44	Invalid tap position: Master	The tap position of a master in parallel operation is invalid.	Check the function and wiring of the master's tap position capture. Connect as shown in the connection diagram.
45	Blocking activated	Blocking has been activated by another TAPCON®.	Check the current operating conditions of the transformers in parallel operation and the set parameters for the corresponding TAPCON®.
46	Invalid measured current value in parallel operation group	The received measured current value of another TAPCON® in parallel operation is invalid.	Current measurement of the affected TAPCON® is not working correctly. Check the measurement transformer and the wiring of the corresponding TAPCON®.
47	Invalid measured voltage value in parallel operation group	The received measured voltage value of another TAPCON® in parallel operation is invalid.	The voltage measurement system of the affected TAPCON® is not working properly. Check the measurement transformer and the wiring of the corresponding TAPCON®.
48	No other TAPCON® in parallel operation group	There are no other TAPCON® units involved in parallel operation.	Check the current operating conditions of the transformers in parallel operation as well as the operational readiness and correct wiring of the TAPCON® units involved in parallel operation.
49	CAN bus node is missing	No CAN bus communication with other TAPCON® units present.	CAN bus communication not correctly configured. Check wiring as per connection diagram. Use CAN bus address ≠ 0. Assign a separate CAN bus address to each TAPCON®.
50	Motor runtime exceeded	The motor runtime has been exceeded.	Check the functional readiness of the motor-drive unit and the set parameters. Ensure that the value of the set motor runtime matches the affected motor-drive unit.
51	Invalid tap position	The captured tap position is invalid.	Check the function and wiring of the tap position capture of the corresponding TAPCON®. Connect as shown in the connection diagram.
152	Measured voltage is not available	There is no measured voltage available.	Check the measurement transformer and the wiring of the corresponding TAPCON®.
154	Invalid measured voltage value	The measured voltage value is invalid.	The TAPCON® voltage measurement is not working correctly. Check the measurement transformer and the wiring of the corresponding TAPCON®.
155	Circulating reactive current calculation	Circulating reactive current cannot be calculated.	The current-measurement system of a TAPCON® is not working properly. Check the measurement transformers and the wiring of the corresponding TAPCON®.

No.	Name	Description	Remedy
156	Motor protective switch	Motor protective switch triggered.	Follow the operating instructions for the motor-drive unit.
186	Tap position analog output	The value cannot be issued via the analog output.	Check the set parameters and the wiring of the analog output.
259	Rotating field incorrectly connected	Rotating field incorrectly connected	Check whether the motor is correctly connected to the power supply (note rotating field!).
260	Limit value ΔU-3ph	The limit value for the difference in voltage between the three phases has been exceeded.	Check the current operating conditions of the transformer and the set parameter ΔU-3ph.
263	Limit value Δf-3ph	The limit value for the angle difference between the three phases is exceeded.	Check the current operating conditions of the transformer and the set parameter Δf-3ph.
266	Test tap or configuration faulty	The connection and/or configuration of the three-phase measurement is faulty.	Inspect the connection of the current transformer and voltage transformer and the configuration of the three-phase measurement.
267	cosf interpolation active	The parallel operation is carried out with interpolated values.	No CAN bus communication with other TAPCON® units present. Check wiring as per connection diagram.
271	Signal from gear motor missing	No feedback from gear motor (S13)	Ensure that the gear motor is correctly connected to the control cabinet. Check the functionality of the cam switch S13.
276	Protective relay RS of OLTC column A triggered	The protective relay RS of the on-load tap-changer (column A) has been triggered.	Contact Maschinenfabrik Reinhausen GmbH's Technical Service department.
279	Pressure relief device of OLTC column A triggered	The pressure relief device of the on-load tap-changer (column A) has been triggered.	Contact Maschinenfabrik Reinhausen GmbH's Technical Service department.
282	Pressure relief device of transformer triggered	The pressure relief device of the transformer has triggered	Establish the cause of the pressure relief device triggering.
283	Buchholz relay: Accumulation of gases (column A)	The Buchholz relay of the on-load tap-changer (column A) is reporting the accumulation of gases.	Establish the cause of gases accumulating.
286	Buchholz relay: Loss of insulating fluid (column A)	The Buchholz relay of the on-load tap-changer (column A) is reporting a loss of insulation fluid.	Establish the cause of the loss of insulating fluid.
289	Buchholz relay: Insulating fluid surge (column A)	The Buchholz relay of the on-load tap-changer (column A) is reporting a sudden surge in insulating fluid.	Establish the cause of the surge in insulating fluid.
292	Buchholz relay: Accumulation of gases (transformer)	The Buchholz relay of the transformer is reporting that gases have accumulated.	Establish the cause of gases accumulating.
293	Buchholz relay: Loss of insulating fluid (transformer)	The Buchholz relay of the transformer is reporting that there has been a loss of insulating fluid.	Establish the cause of the loss of insulating fluid.

No.	Name	Description	Remedy
294	Buchholz relay: Insulating fluid surge (transformer)	The Buchholz relay of the transformer is reporting a sudden surge in insulating fluid.	Establish the cause of the surge in insulating fluid.
295	Tap position display error	The module for the tap position display is defective.	Check the module for the tap position display.
296	Communication with tap position display error	A connection with the module for the tap position display cannot be established.	Check the connection cable between the control and module for the tap position display.
297	Deviation in tap position	A deviation in the tap position has been detected.	The tap positions of the control and module for the tap position display are different. An automatic adjustment is performed.
298	Deviation in operations counter	A deviation in the operations counter has been detected.	The operations counters for the control and module for the tap position display are different. An automatic adjustment is performed.
299	OLTC: Mechanical blocking	The on-load tap-changer is mechanically blocked.	Check the on-load tap-changer.
300	Motor voltage invalid	Motor voltage is invalid.	Check the connection of motor voltage measurement card.
301	Generic SCADA command 1	The generic SCADA command 1 has been received.	-
302	Generic SCADA command 2	The generic SCADA command 2 has been received.	-
303	Generic SCADA command 3	The generic SCADA command 3 has been received.	-
304	Generic SCADA command 4	The generic SCADA command 4 has been received.	-
305	Generic SCADA command 5	The generic SCADA command 5 has been received.	-
306	Generic SCADA command 6	The generic SCADA command 6 has been received.	-
307	Generic SCADA command 7	The generic SCADA command 7 has been received.	-
308	Generic SCADA command 8	The generic SCADA command 8 has been received.	-
309	Generic SCADA command 9	The generic SCADA command 9 has been received.	-
310	Generic SCADA command 10	The generic SCADA command 10 has been received.	-
311	Generic digital input 1	There is a signal at generic digital input 1.	-
312	Generic digital input 2	There is a signal at generic digital input 2.	-
1001	Ambient temperature invalid	The analog signal for recording the ambient temperature is invalid.	Check the sensor, device wiring, and analog signal configuration.

No.	Name	Description	Remedy
1002	Lower oil temperature invalid	The analog signal for recording the lower oil temperature is invalid.	Check the sensor, device wiring, and analog signal configuration.
1010	Generic temperature 1 invalid	The analog signal for recording the generic temperature 1 is invalid.	Check the sensor, device wiring, and analog signal configuration.
1011	Generic temperature 2 invalid	The analog signal for recording the generic temperature 2 is invalid.	Check the sensor, device wiring, and analog signal configuration.
1012	Generic temperature 3 invalid	The analog signal for recording the generic temperature 3 is invalid.	Check the sensor, device wiring, and analog signal configuration.
1013	Generic temperature 4 invalid	The analog signal for recording the generic temperature 4 is invalid.	Check the sensor, device wiring, and analog signal configuration.
1014	Generic temperature 5 invalid	The analog signal for recording the generic temperature 5 is invalid.	Check the sensor, device wiring, and analog signal configuration.
1015	Generic temperature 6 invalid	The analog signal for recording the generic temperature 6 is invalid.	Check the sensor, device wiring, and analog signal configuration.
1016	Generic temperature 7 invalid	The analog signal for recording the generic temperature 7 is invalid.	Check the sensor, device wiring, and analog signal configuration.
1017	Generic temperature 8 invalid	The analog signal for recording the generic temperature 8 is invalid.	Check the sensor, device wiring, and analog signal configuration.
1019	Hot-spot temperature invalid	The analog signal for recording the hot-spot temperature is invalid or invalid parameters were set for the hot-spot calculation.	Check the sensor, device wiring, and analog signal configuration and the parameters for the hot-spot calculation.
1020	Hot-spot temperature winding 1 invalid	Invalid analog signal for recording the hot-spot temperature of winding 1 or invalid parameters for the hot-spot calculation.	Check the sensor, device wiring, and analog signal configuration and the parameters for the hot-spot calculation.
1021	Hot-spot temperature winding 2 invalid	Invalid analog signal for recording the hot-spot temperature of winding 2 or invalid parameters for the hot-spot calculation.	Check the sensor, device wiring, and analog signal configuration and the parameters for the hot-spot calculation.
1022	Hot-spot temperature winding 3 invalid	Invalid analog signal for recording the hot-spot temperature of winding 3 or invalid parameters for the hot-spot calculation.	Check the sensor, device wiring, and analog signal configuration and the parameters for the hot-spot calculation.
1024	Relative aging rate > limit value	Relative aging rate is greater than > limit value.	Check the current operating conditions of the transformer, the parameters for calculating the relative aging rate, and the set limit value.

No.	Name	Description	Remedy
1025	Relative aging rate >> limit value	Relative aging rate is greater than >> limit value.	Check the current operating conditions of the transformer, the parameters for calculating the relative aging rate, and the set limit value.
1026	Ambient temperature > limit value	Ambient temperature is greater than > limit value.	Check the current operating conditions of the transformer, temperature sensor, analog signal configuration, and the set limit value.
1027	Ambient temperature >> limit value	Ambient temperature is greater than >> limit value.	Check the current operating conditions of the transformer, temperature sensor, analog signal configuration, and the set limit value.
1028	Ambient temperature < limit value	Ambient temperature is less than the < limit value.	Check the current operating conditions of the transformer, temperature sensor, analog signal configuration, and the set limit value.
1029	Ambient temperature << limit value	Ambient temperature is less than the << limit value.	Check the current operating conditions of the transformer, temperature sensor, analog signal configuration, and the set limit value.
1030	Lower oil temperature > limit value	Lower oil temperature is greater than > limit value.	Check the current operating conditions of the transformer, temperature sensor, analog signal configuration, and the set limit value.
1031	Lower oil temperature >> limit value	Lower oil temperature is greater than >> limit value.	Check the current operating conditions of the transformer, temperature sensor, analog signal configuration, and the set limit value.
1032	Lower oil temperature < limit value	Lower oil temperature is less than < limit value.	Check the current operating conditions of the transformer, temperature sensor, analog signal configuration, and the set limit value.
1033	Lower oil temperature << limit value	Lower oil temperature is less than << limit value.	Check the current operating conditions of the transformer, temperature sensor, analog signal configuration, and the set limit value.
1052	Gen. temperature 1 > limit value	Generic temperature 1 is greater than > limit value.	Check the current operating conditions of the transformer, temperature sensor, analog signal configuration, and the set limit value.
1053	Gen. temperature 1 >> limit value	Generic temperature 1 is greater than >> limit value.	Check the current operating conditions of the transformer, temperature sensor, analog signal configuration, and the set limit value.
1054	Gen. temperature 1 < limit value	Generic temperature 1 is less than < limit value.	Check the current operating conditions of the transformer, temperature sensor, analog signal configuration, and the set limit value.
1055	Gen. temperature 1 << limit value	Generic temperature 1 is less than << limit value.	Check the current operating conditions of the transformer, temperature sensor, analog signal configuration, and the set limit value.
1056	Gen. temperature 2 > limit value	Generic temperature 2 is greater than > limit value.	Check the current operating conditions of the transformer, temperature sensor, analog signal configuration, and the set limit value.
1057	Gen. temperature 2 >> limit value	Generic temperature 2 is greater than >> limit value.	Check the current operating conditions of the transformer, temperature sensor, analog signal configuration, and the set limit value.
1058	Gen. temperature 2 < limit value	Generic temperature 2 is less than < limit value.	Check the current operating conditions of the transformer, temperature sensor, analog signal configuration, and the set limit value.

No.	Name	Description	Remedy
1059	Gen. temperature 2 << limit value	Generic temperature 2 is less than << limit value.	Check the current operating conditions of the transformer, temperature sensor, analog signal configuration, and the set limit value.
1060	Gen. temperature 3 > limit value	Generic temperature 3 is greater than > limit value.	Check the current operating conditions of the transformer, temperature sensor, analog signal configuration, and the set limit value.
1061	Gen. temperature 3 >> limit value	Generic temperature 3 is greater than >> limit value.	Check the current operating conditions of the transformer, temperature sensor, analog signal configuration, and the set limit value.
1062	Gen. temperature 3 < limit value	Generic temperature 3 is less than < limit value.	Check the current operating conditions of the transformer, temperature sensor, analog signal configuration, and the set limit value.
1063	Gen. temperature 3 << limit value	Generic temperature 3 is less than << limit value.	Check the current operating conditions of the transformer, temperature sensor, analog signal configuration, and the set limit value.
1064	Gen. temperature 4 > limit value	Generic temperature 4 is greater than > limit value.	Check the current operating conditions of the transformer, temperature sensor, analog signal configuration, and the set limit value.
1065	Gen. temperature 4 >> limit value	Generic temperature 4 is greater than >> limit value.	Check the current operating conditions of the transformer, temperature sensor, analog signal configuration, and the set limit value.
1066	Gen. temperature 4 < limit value	Generic temperature 4 is less than < limit value.	Check the current operating conditions of the transformer, temperature sensor, analog signal configuration, and the set limit value.
1067	Gen. temperature 4 << limit value	Generic temperature 4 is less than << limit value.	Check the current operating conditions of the transformer, temperature sensor, analog signal configuration, and the set limit value.
1068	Gen. temperature 5 > limit value	Generic temperature 5 is greater than > limit value.	Check the current operating conditions of the transformer, temperature sensor, analog signal configuration, and the set limit value.
1069	Gen. temperature 5 >> limit value	Generic temperature 5 is greater than >> limit value.	Check the current operating conditions of the transformer, temperature sensor, analog signal configuration, and the set limit value.
1070	Gen. temperature 5 < limit value	Generic temperature 5 is less than < limit value.	Check the current operating conditions of the transformer, temperature sensor, analog signal configuration, and the set limit value.
1071	Gen. temperature 5 << limit value	Generic temperature 5 is less than << limit value.	Check the current operating conditions of the transformer, temperature sensor, analog signal configuration, and the set limit value.
1072	Gen. temperature 6 > limit value	Generic temperature 6 is greater than > limit value.	Check the current operating conditions of the transformer, temperature sensor, analog signal configuration, and the set limit value.
1073	Gen. temperature 6 >> limit value	Generic temperature 6 is greater than >> limit value.	Check the current operating conditions of the transformer, temperature sensor, analog signal configuration, and the set limit value.
1074	Gen. temperature 6 < limit value	Generic temperature 6 is less than < limit value.	Check the current operating conditions of the transformer, temperature sensor, analog signal configuration, and the set limit value.

No.	Name	Description	Remedy
1075	Gen. temperature 6 << limit value	Generic temperature 6 is less than << limit value.	Check the current operating conditions of the transformer, temperature sensor, analog signal configuration, and the set limit value.
1076	Gen. temperature 7 > limit value	Generic temperature 7 is greater than > limit value.	Check the current operating conditions of the transformer, temperature sensor, analog signal configuration, and the set limit value.
1077	Gen. temperature 7 >> limit value	Generic temperature 7 is greater than >> limit value.	Check the current operating conditions of the transformer, temperature sensor, analog signal configuration, and the set limit value.
1078	Gen. temperature 7 < limit value	Generic temperature 7 is less than < limit value.	Check the current operating conditions of the transformer, temperature sensor, analog signal configuration, and the set limit value.
1079	Gen. temperature 7 << limit value	Generic temperature 7 is less than << limit value.	Check the current operating conditions of the transformer, temperature sensor, analog signal configuration, and the set limit value.
1080	Gen. temperature 8 > limit value	Generic temperature 8 is greater than > limit value.	Check the current operating conditions of the transformer, temperature sensor, analog signal configuration, and the set limit value.
1081	Gen. temperature 8 >> limit value	Generic temperature 8 is greater than >> limit value.	Check the current operating conditions of the transformer, temperature sensor, analog signal configuration, and the set limit value.
1082	Gen. temperature 8 < limit value	Generic temperature 8 is less than < limit value.	Check the current operating conditions of the transformer, temperature sensor, analog signal configuration, and the set limit value.
1083	Gen. temperature 8 << limit value	Generic temperature 8 is less than << limit value.	Check the current operating conditions of the transformer, temperature sensor, analog signal configuration, and the set limit value.
1086	Hot-spot > limit value	Hot-spot temperature is greater than > limit value.	Check the current operating conditions of the transformer, the parameters for calculating the hot-spot temperature, and the set limit value.
1087	Hot-spot >> limit value	Hot-spot temperature is greater than >> limit value.	Check the current operating conditions of the transformer, the parameters for calculating the hot-spot temperature, and the set limit value.
1088	Loss-of-life > limit value	Loss-of-life is greater than > limit value.	Check the current operating conditions of the transformer, the parameters for calculating the loss-of-life, and the set limit value.
1089	Loss-of-life >> limit value	Loss-of-life is greater than >> limit value.	Check the current operating conditions of the transformer, the parameters for calculating the loss-of-life, and the set limit value.
1095	OLTC oil level >> limit value	Oil level of on-load tap-changer is greater than >> limit value.	Check the on-load tap-changer oil level and the device wiring. If using an analog sensor, check the sensor, analog signal configuration, and the set limit value.
1097	OLTC oil level << limit value	Oil level of on-load tap-changer is less than << limit value.	Check the on-load tap-changer oil level and the device wiring. If using an analog sensor, check the sensor, analog signal configuration, and the set limit value.

No.	Name	Description	Remedy
1099	Transformer oil level >> limit value	Oil level of transformer is greater than >> limit value.	Check the transformer oil level and the device wiring. If using an analog sensor, check the sensor, analog signal configuration, and the set limit value.
1101	Transformer oil level << limit value	Oil level of transformer is less than << limit value.	Check the transformer oil level and the device wiring. If using an analog sensor, check the sensor, analog signal configuration, and the set limit value.
1106	OLTC oil temperature > limit value	Oil temperature of on-load tap-changer is greater than > limit value.	Check the current operating conditions of the on-load tap-changer, temperature sensor, analog signal configuration, and the set limit value.
1107	OLTC oil temperature >> limit value	Oil temperature of on-load tap-changer is greater than >> limit value.	Check the current operating conditions of the on-load tap-changer, temperature sensor, analog signal configuration, and the set limit value.
1108	OLTC oil temperature < limit value	Oil temperature of on-load tap-changer is less than < limit value.	Check the current operating conditions of the on-load tap-changer, temperature sensor, analog signal configuration, and the set limit value.
1109	OLTC oil temperature << limit value	Oil temperature of on-load tap-changer is less than << limit value.	Check the current operating conditions of the on-load tap-changer, temperature sensor, analog signal configuration, and the set limit value.
1112	Upper oil temperature > limit value	Upper oil temperature is greater than > limit value.	Check the current operating conditions of the transformer, temperature sensor, analog signal configuration, and the set limit value.
1113	Upper oil temperature >> limit value	Upper oil temperature is greater than >> limit value.	Check the current operating conditions of the transformer, temperature sensor, analog signal configuration, and the set limit value.
1114	Upper oil temperature < limit value	Upper oil temperature is less than < limit value.	Check the current operating conditions of the transformer, temperature sensor, analog signal configuration, and the set limit value.
1115	Upper oil temperature << limit value	Upper oil temperature is less than << limit value.	Check the current operating conditions of the transformer, temperature sensor, analog signal configuration, and the set limit value.
1121	OLTC oil temperature invalid	The analog signal for recording the on-load tap-changer's oil temperature is invalid.	Check the sensor, device wiring, and analog signal configuration.
1123	Upper oil temperature invalid	The analog signal for recording the upper oil temperature is invalid.	Check the sensor, device wiring, and analog signal configuration.
1145	Plan OLTC maintenance	OLTC maintenance is required soon.	Carry out OLTC maintenance soon.
1146	OLTC maintenance is required	OLTC maintenance is required.	Carry out OLTC maintenance.
1147	Plan OLTC replacement	The OLTC replacement is required soon.	Replace the OLTC soon.
1148	OLTC must be replaced	The OLTC must be replaced.	Replace the OLTC.
1149	Plan DSI replacement	The DSI must be replaced soon.	Replace the DSI soon.

No.	Name	Description	Remedy
1150	DSI must be replaced	The DSI must be replaced.	Replace the DSI.
1151	Plan selector maintenance	The selector maintenance is required soon.	Carry out selector maintenance soon.
1152	Selector maintenance is required	Selector maintenance is required.	Carry out selector maintenance.
1153	Plan oil sample	An oil sample is required soon.	Take an oil sample soon.
1154	Oil sample is required	An oil sample is required.	Take an oil sample.
1155	Plan operator maintenance (OLTC)	Operator maintenance (OLTC) is required soon.	Carry out operator maintenance (OLTC) soon.
1156	Operator maintenance (OLTC) is required	Operator maintenance (OLTC) is required.	Carry out operator maintenance (OLTC).
1157	Plan operator maintenance (transformer)	Operator maintenance (transformer) is required soon.	Carry out operator maintenance (transformer) soon.
1158	Operator maintenance (transformer) is required	Operator maintenance (transformer) is required.	Carry out operator maintenance (transformer).
3327	Calibration OLTC position acquisition	The on-load tap-changer position acquisition is not sufficiently calibrated.	Calibration position acquisition in accordance with the operating instructions.
3328	VIM signal error (yellow)	A signal is present at the input "VIM signal error (yellow)".	Check the function of the VIM module and acknowledge the error with the RESET key.
3329	VIM vacuum interrupter error (red)	A signal is present at the input "VIM vacuum interrupter error (red)".	Check the function of the VIM module and acknowledge the error with the RESET key.
3364	OLTC rotation direction error	The on-load tap-changer rotation direction is incorrect.	Check that motor-drive unit is correctly connected to the voltage supply in accordance with the connection diagram.
3365	VIM module switched off	A signal is not present at the VIM status digital input.	Check the function of the VIM module and the wiring.

Table 127: Event messages

13 Disassembly

The safe disassembly of the motor-drive unit is described below.

⚠ WARNING

Danger of death or severe injury!

An energized transformer and energized on-load tap-changer and motor-drive unit components can cause death or serious injuries during disassembly!

► Switch off the voltage supply.

► Secure the voltage supply to prevent an unintentional restart.

► Ensure that everything is de-energized.

► Cover or cordon off adjacent energized parts.

Disassembling the gear motor

Proceed as follows to disassemble the gear motor:

✓ The motor-drive unit must be ready for operation.

1. Switch the on-load tap-changer to the neutral position.
2. Switch OFF the control cabinet power supply.
3. Remove the connecting cable between the gear motor and the control cabinet.
4. **⚠ WARNING!** Secure the gear motor against falling off using a lifting device. Otherwise, the gear motor may become damaged and serious injuries may result.
5. Remove the gear motor screw connection on the on-load tap-changer head (3x M12).
6. Lower the gear motor using a lifting device.
7. Secure the OLTC adjustment position with a pin.

⇨ The gear motor is disassembled.

Removing the control cabinet

To remove the control cabinet, proceed as follows:

1. Remove the connecting cable between the gear motor and the control cabinet.
2. Remove the control cabinet connection cable.
3. Attach the lifting gear to the extendable control cabinet brackets.

4. Remove the nuts for fastening the control cabinet.

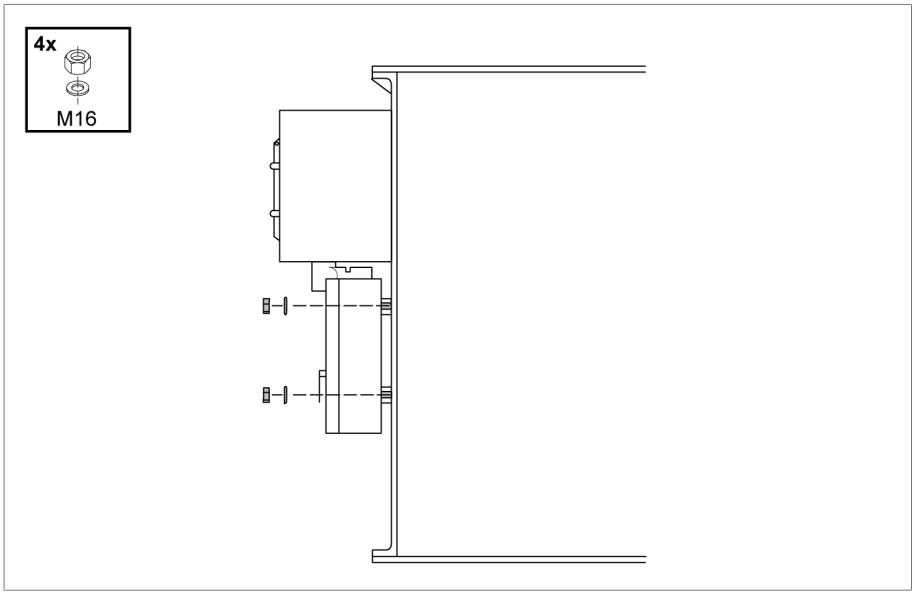

Figure 248: Removing the control cabinet mounting

5. **⚠ WARNING!** Remove and lower the control cabinet using the lifting gear. While doing so, ensure that the lifting gear cable angle does not fall below 45° relative to the horizontal. Otherwise, the control cabinet may become damaged and serious injuries may result.

⇨ The control cabinet is removed.

14 Disposal

Observe the national requirements applicable in the country of use.

15 Technical data

15.1 Gear motor

Gear motor	ETOS® TD
Connection power	0.45…0.75 kW
Voltage supply	3 AC/N 330...480 V
Frequency[1]	50 Hz or 60 Hz
Running time of output shaft per tap-change operation	approx. 6.5 s
Maximum number of operating positions	35
Permitted ambient temperature during operation	- 25...+ 55 °C
Protection class (DIN EN 60529)	IP 66
Weight (including adapter flange)	approx. 23.5 kg

Table 128: Gear motor technical data

[1]) According to your purchase order, you receive the gear motor in a version for 50 Hz power systems or 60 Hz power systems. Observe the information on the nameplate.

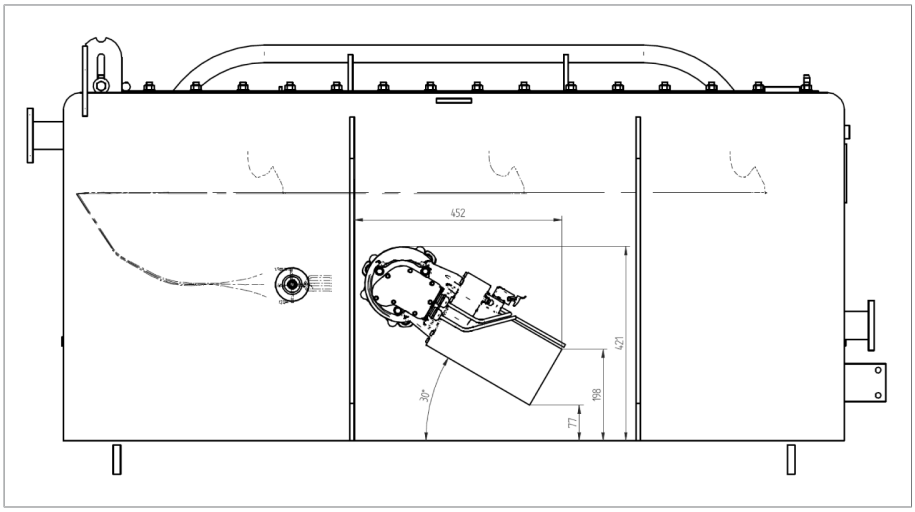

Figure 249: Gear motor dimensions (view from below)

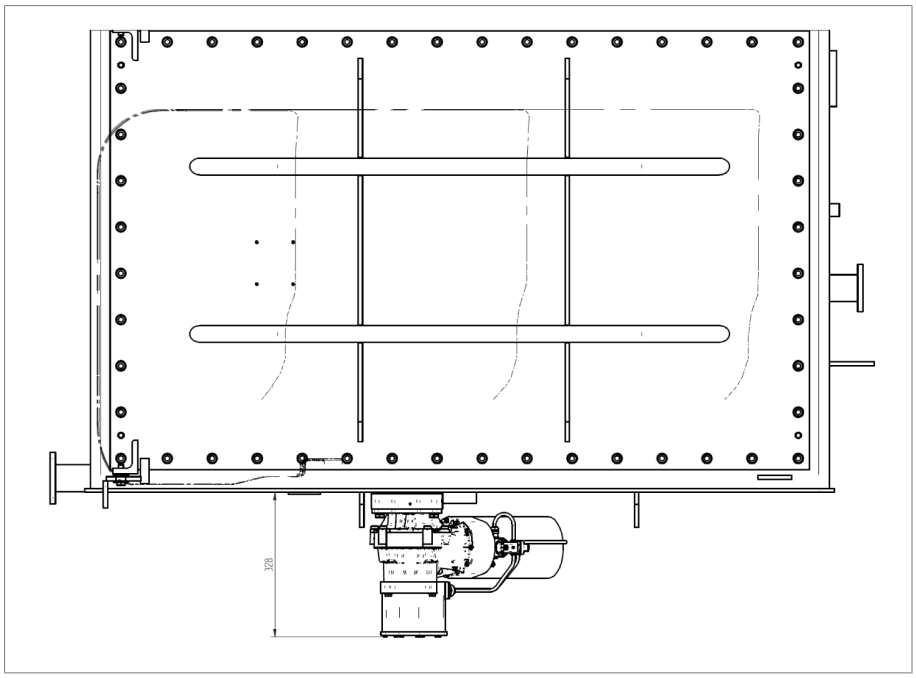

Figure 250: Gear motor dimensions (view from the front)

15.2 Control cabinet

Control cabinet	1200	1500
Dimensions (width x height x depth)	780 x 1370 x 500 mm	780 x 1690 x 500 mm
Power consumption	See nameplate	
Voltage supply	See nameplate	
Frequency	See nameplate	
Control and heating circuit voltage supply	See nameplate	
Heating power	100 W	150 W
Plug socket	220...240 V AC, max. 10 A	
Degree of protection	IP66	
Potential corrosiveness category in accordance with ISO 12944-2:2018	C4 high, C4 very high C5 high	
Permissible total weight	150 kg	200 kg

Table 129: Technical data for the control cabinet

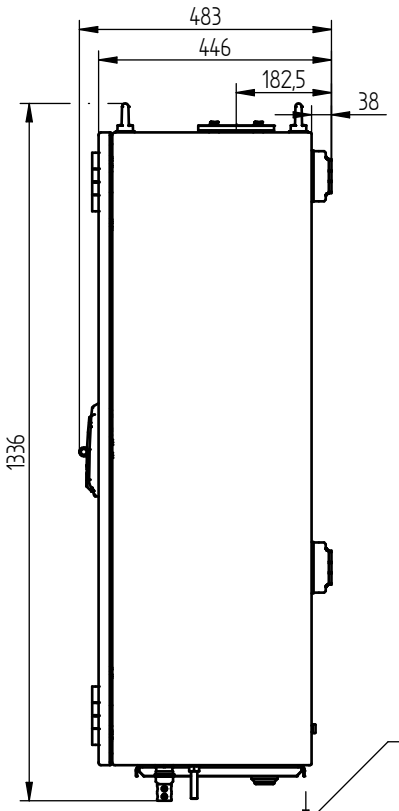

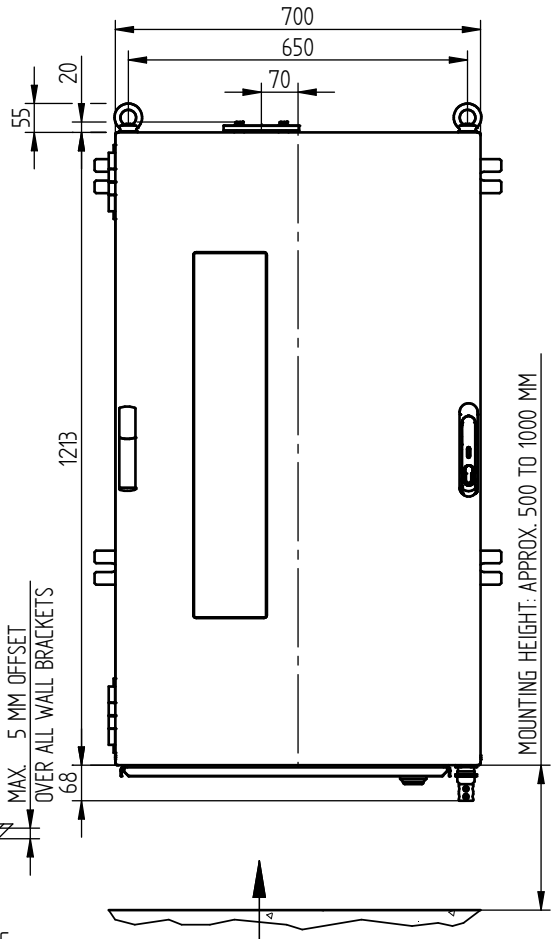

A–A
1:5

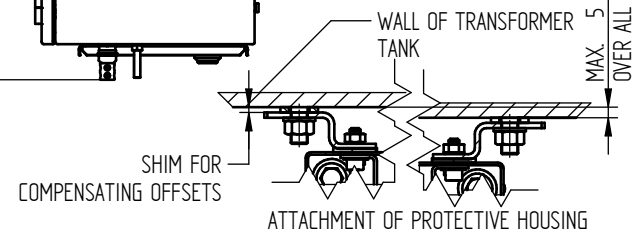

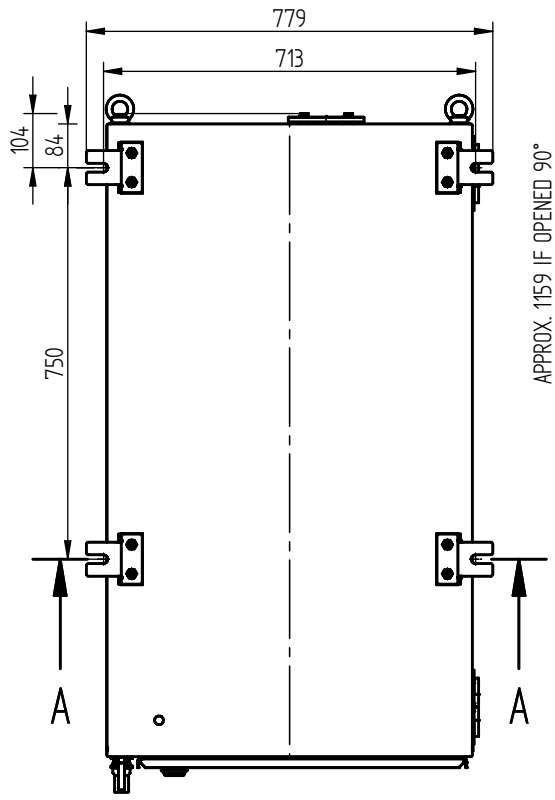

ARRANGEMENT OF FIXING HOLES ON PROTECTIVE HOUSING
(VIEWED FROM BEHIND)

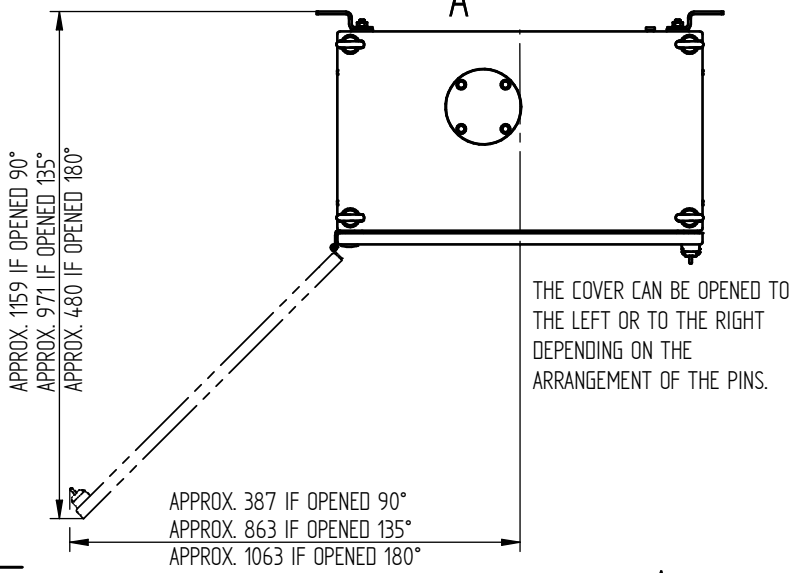

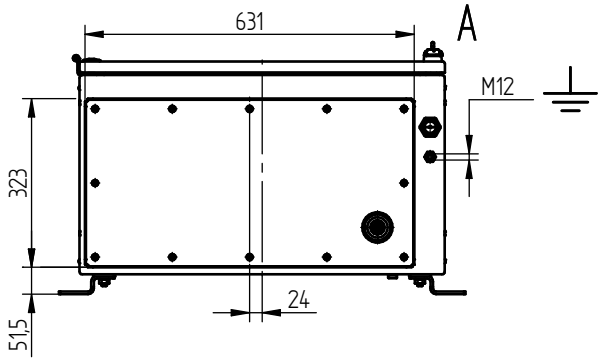

	Datum	Name	Dokumentnummer	
Gez.	09.11.2020	NOVACKJ	SED 7754572 000 00	
Gepr.	12.11.2020	STEMPFHUBERJ	Änderungsnummer	Maßstab
Norm.	13.11.2020	WANNINGER	1104191	1:10

Maßangaben in mm, soweit nicht anders angegeben

MR

MOTOR-DRIVE UNIT ETOS®
ETOS TOP DRIVE 1200
DIMENSION DRAWING

Serialnummer
–

Materialnummer 101335000E

Blatt 1/ 1

A3

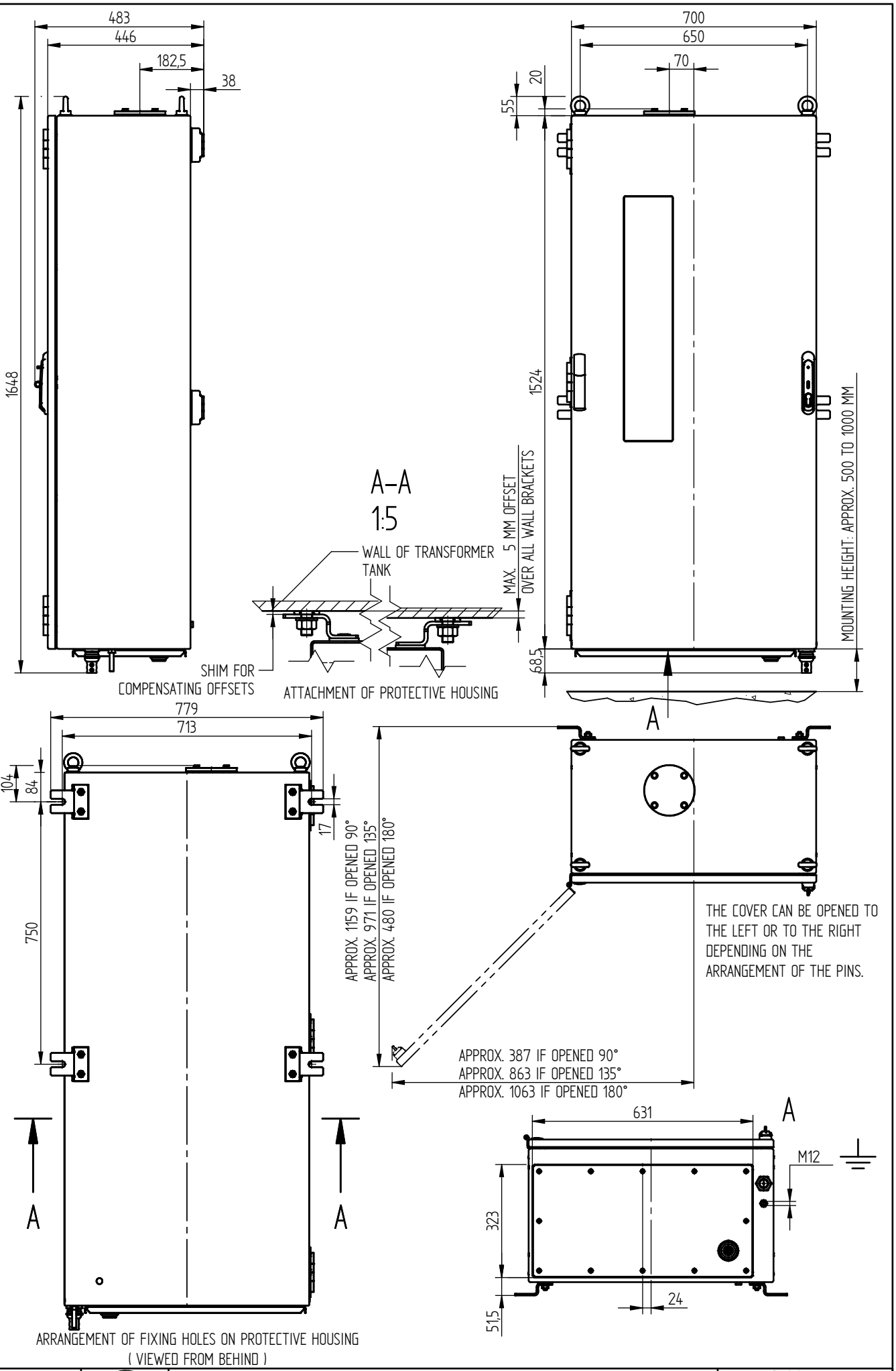

	Datum	Name	Dokumentnummer	
Gez.	10.11.2020	NOVACKJ	SED 7751759 000 00	
Gepr.	12.11.2020	STEMPFHUBERJ	Änderungsnummer	Maßstab
Norm.	13.11.2020	WANNINGER	1104191	1:10

Maßangaben in mm, soweit nicht anders angegeben

MR

MOTOR-DRIVE UNIT ETOS®
ETOS TOP DRIVE 1500
DIMENSION DRAWING

Serialnummer
–

Materialnummer
101334980E

Blatt
1/ 1

A3

15.3 ISM® assemblies

15.3.1 Voltage measurement and current measurement

	UI 1	UI 3
Measurement	1 phase	3-phase
Voltage measurement	U_N (RMS): 100 VAC Measuring range (RMS): 19.6...150 V AC Measuring accuracy (at U_N, -25...+70°C): <± 0.3% Intrinsic consumption: < 1 VA Measurement category III in accordance with IEC 61010-2-30	
Current measurement	I_N: 0.2 / 1 / 5 A Measuring range: 0.01...2.1 · I_N Overload capacity: 12.5 A (continuous), 500 A (for 1 s) Measuring accuracy (at I_N, -25...+70°C): <± 0.5% Intrinsic consumption: < 1 VA	
Phase angle	Measuring accuracy (-25...+70°C): U_x/I_x <± 0.5°; U_x/U_y <± 0.3°	
Frequency measurement	f_N: 50 / 60 Hz Measuring range: 45...65 Hz Measuring accuracy (-25...+70°C): <± 0.03%	

Table 130: Technical data for the UI 1 and UI 3 assemblies

Interface	Pin	Description
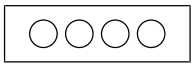 UI 1 N L NC NC UI 3 N L1 L2 L3	N	Voltage input for neutral conductor
	L, L1	Voltage input for phase L (UI 1) or L1 (UI 3)
	L2	Voltage input for phase L2 (UI 3 only)
	L3	Voltage input for phase L3 (UI 3 only)

Table 131: Voltage measurement

Interface	Pin	Description
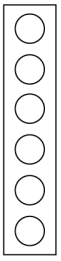 UI 1 UI 3 k k1 l l1 NC k2 NC l2 NC k3 NC l3	k, k1	Current input for phase L (UI 1) or L1 (UI 3)
	l, l1	Current output for phase L (UI 1) or L1 (UI 3)
	k2	Current input for phase L2 (UI 3 only)
	l2	Current output for phase L2 (UI 3 only)
	k3	Current input for phase L3 (UI 3 only)
	l3	Current output for phase L3 (UI 3 only)

Table 132: Current measurement

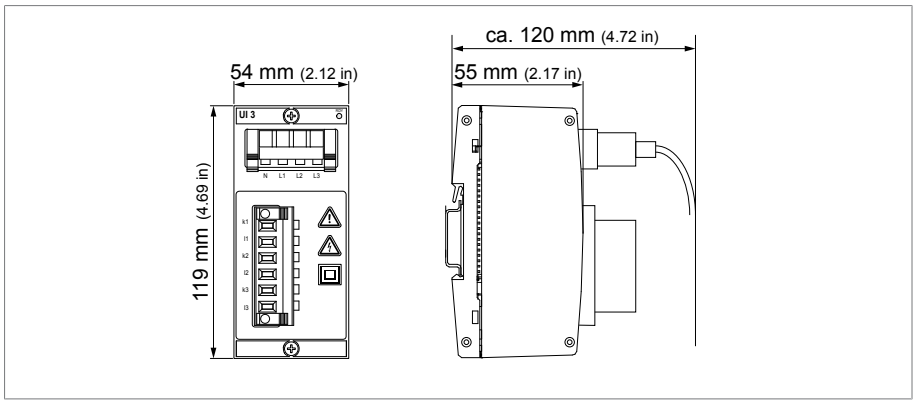

Figure 251: UI 1 und UI 3 dimensions

15.3.2 UI 5-4 voltage measurement and current measurement

	UI 5-4
Measurement	3-phase
Voltage measurement	U_N (RMS): 230 V AC Measuring range (RMS): 10...300 VAC Measuring accuracy (at U_N, -25...+70 °C): < ±0.3% Intrinsic consumption: < 1 VA Measurement category III in accordance with IEC 61010-2-30
Current measurement	I_N: 5 A Measuring range: 10 mA...15 A Overload capacity: 15 A (continuous), 100 A (for 1 s) Measuring accuracy (at I_N, -25...+70 °C): <± 0.5% Intrinsic consumption: < 1 VA
Phase angle	Measuring accuracy (-25 to +70 °C): V_x/I_x <±0.6°; V_x/U_y <±0.15°
Frequency measurement	f_N: 50 / 60 Hz Measuring range: 35...75 Hz Measuring accuracy: (-25 to +70°C): <±0.002 Hz

Table 133: Technical data of the UI 5-4 assemblies

Interface	Pin	Description
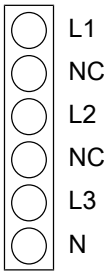	L1	Voltage input for phase L1
	NC	Not used
	L2	Voltage input for phase L2
	NC	Not used
	L3	Voltage input for phase L3
	N	Voltage input for neutral conductor

Table 134: Voltage measurement

Interface	Pin	Description
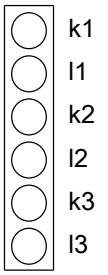	k1	Current input for phase L1
	I1	Current output for phase L1
	k2	Current input for phase L2
	I2	Current output for phase L2
	k3	Current input for phase L3
	I3	Current output for phase L3

Table 135: Current measurement

Interface	Pin	Description
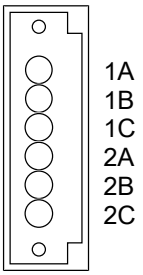	1A, 1B, 1C, 2A, 2B, 2C	No function

Table 136: Relay

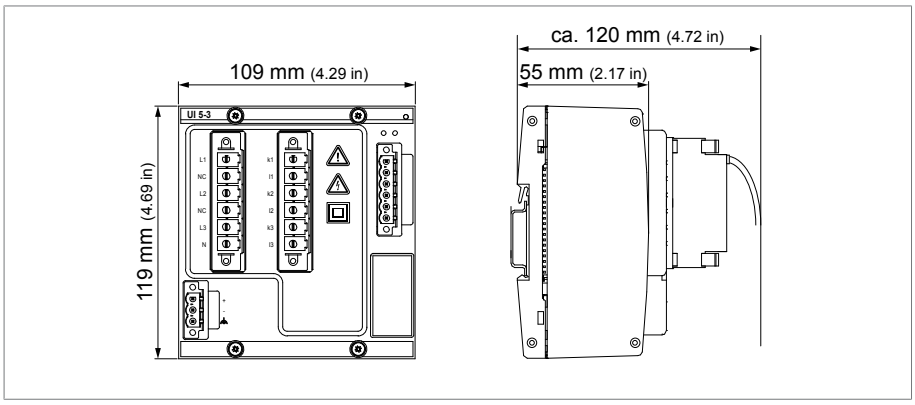

Figure 252: UI 5 dimensions

15.3.3 Digital inputs and outputs

		DIO 28-15	DIO 42-20	DIO 42-20 HL
Inputs (plug-based electrical isolation)	Quantity	28		42
	Logical 0	0...10 V AC (RMS) 0 to 10 V DC		0...40 V AC (RMS) 0 to 40 V DC
	Logical 1	18...260 V AC (RMS) 18 to 260 V DC		170...260 V AC (RMS) 170 to 260 V DC
	Input current	Typ. 1.3 mA (regardless of *U*)		
	Simultaneity factor	At 70°C and *U* ≥ 230 V: max. 50%		
Outputs (floating relay outputs)	Number (number of change-over contacts in parentheses)	15 (9)		20 (12)
	Contact load capacity	Min.: 5 V, 10 mA Max. AC: 230 VAC; 5 A Max. DC: See diagram		
	Simultaneity factor	Up to 60°C: 100%, > 60°C: -5%/K		

Table 137: Technical data for the DIO 28-15 and DIO 42-20 assemblies

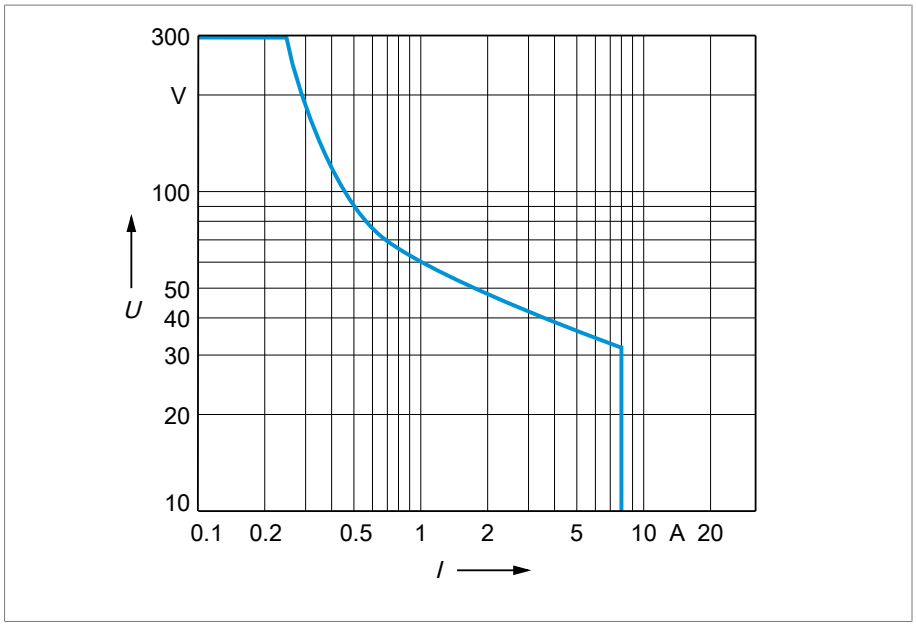

Figure 253: Contact load capacity of digital outputs with resistive load

⚠ CAUTION

Electric shock!

The inputs of the DIO assembly have plug-based electrical isolation. A mixture of voltage ranges (e.g. extra low voltage and low voltage) or various phases within a plug can lower the protection against electric shock.

► Use the same voltage ranges within a plug.

► Use the same phase within a plug.

Interface	Pin						Description
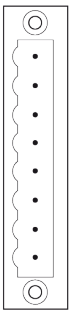	1	9	17	25	33	41	Input
	2	10	18	26	34	42	Input
	3	11	19	27	35	43	Input
	4	12	20	28	36	44	Input
	5	13	21	29	37	45	Input
	6	14	22	30	38	46	Input
	7	15	23	31	39	47	Input
	8	16	24	32	40	48	Common

Table 138: Digital inputs

Interface	Pin				Description
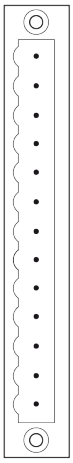	1 A	6 A	11 A	16A	Break contact
	1C	6C	11C	16C	Source contact
	1B	6B	11B	16B	Make contact
	2 A	7 A	12 A	17 A	Break contact
	2C	7C	12C	17C	Source contact
	2B	7B	12B	17B	Make contact
	3 A	8 A	13 A	18 A	Break contact
	3C	8C	13C	18C	Source contact
	3B	8B	13B	18B	Make contact
	4C	9C	14C	19C	Source contact
	4B	9B	14B	19B	Make contact
	5C	10C	15C	20C	Source contact
	5B	10B	15B	20B	Make contact

Table 139: Digital outputs

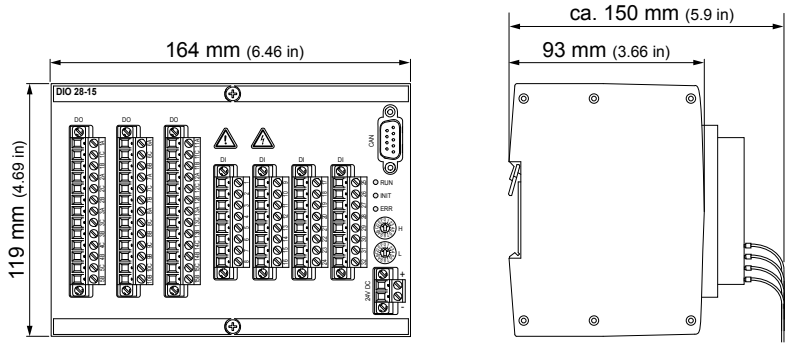

Figure 254: DIO 28-15 dimensions

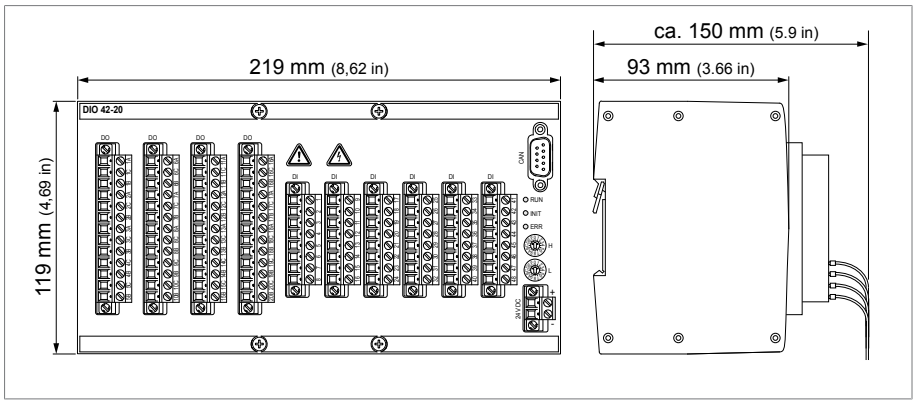

Figure 255: DIO 42-20 dimensions

15.3.4 Analog inputs and outputs

		AIO 2	AIO 4
Channels (input or output)		2	4
Inputs	Measuring range	0 to 10 V 0...20 mA 4...20 mA	
	Load resistance (0/4...20 mA)	Max. 300 Ω	
Outputs	Signal range	0 to 10 V 0...20 mA 4...20 mA	
	Load resistance (0/4...20 mA)	Max. 500 Ω	
Resistor contact series		Maximum resistance 100 Ω...10 kΩ, max. 35 tap positions	

Table 140: Technical data for the AIO 2 and AIO 4 assemblies

Interface	Pin				Description
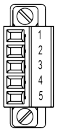	1	6	11	16	I OUT (+): Current output +
	2	7	12	17	I/U IN (+) U OUT (+): Voltage input +, current input +, voltage output +
	3	8	13	18	I/U IN (-): Voltage input -, current input -
	4	9	14	19	I/U OUT (-): Voltage output -, current output -
	5	10	15	20	Not used

Table 141: Analog inputs and outputs

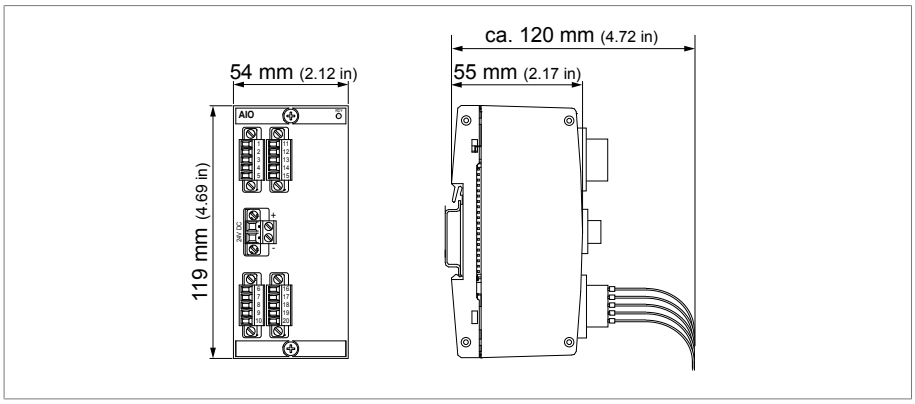

Figure 256: AIO 2 and AIO 4 dimensions

15.3.5 CPU (central processing unit) I

	CPU I
Processor	266 MHz
RAM	256 MB
Interfaces	1x serial RS232/485 (electrically isolated) 3x Ethernet 10/100 Mbps 1x USB 2.0 1x CAN (electrically isolated) 1x CAN
NVRAM (SRAM with battery backup)	256 kB
Application memory	1 GB
Power supply	+24 V DC (18...36 V DC)

Table 142: Technical data for the CPU I assembly

Interface	Pin	Description
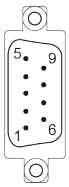	2	RXD (RS232)
	3	TXD (RS232)
	5	GND (RS232, RS485)
	6	RXD+/TXD+ (RS485)
	9	RXD-/TXD- (RS485)

Table 143: COM2 (RS232, RS485)

Interface	Pin	Description
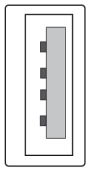	1	VCC
	2	D-
	3	D+
	4	GND

Table 144: USB 2.0

Interface	Pin	Description
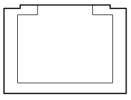	1	TxD+
	2	TxD-
	3	RxD+
	4	NC
	5	NC
	6	RxD-
	7	NC
	8	NC-

Table 145: ETH1, ETH 2.1, ETH 2.2 (RJ45)

Interface	Pin	Description
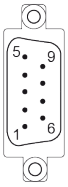	2	CAN-L
	3	CAN-GND
	7	CAN-H

Table 146: CAN1, CAN2

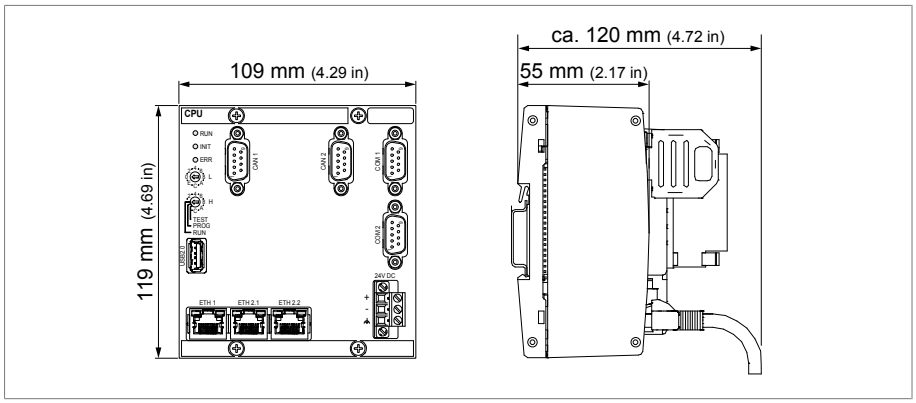

Figure 257: CPU dimensions

Optional accessories	
CAN bus	Terminating resistor ▪ D-SUB plug connector (9-pole) ▪ R = 120 Ω
	Connector with terminal strip for directly connecting CAN lines
Media converter for COM2 interface (only RS232)	Adapter from D-SUB (9-pole) to fiber-optic cable: ▪ ACF660/ST: F-ST, 660 nm, range max. 60 m at 40 kBd ▪ ACF660/SMA: F-SMA, 660 nm, range max. 60 m at 40 kBd ▪ ACF850/ST: F-ST, 850 nm, range max. 1,000 m at 40 kBd ▪ ACF850/SMA: F-SMA, 850 nm, range max. 1,000 m at 40 kBd

Table 147: Optional accessories

15.3.6 CPU (central processing unit) II

	CPU II
Processor	433 MHz
RAM	256 MB
Interfaces	1x serial RS232/485 (electrically isolated) 3x Ethernet 10/100 Mbps 1x USB 2.0 1x CAN (electrically isolated) 1x CAN
NVRAM (SRAM with battery backup)	512 kB
Application memory	Max. 4 GB
Power supply	+24 V DC (18...36 V DC)
Power consumption	Max. 22 W

Table 148: Technical data for the CPU II assembly

Interface	Pin	Description
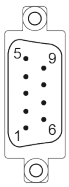	2	RXD (RS232)
	3	TXD (RS232)
	5	GND (RS232, RS485)
	6	RXD+/TXD+ (RS485)
	9	RXD-/TXD- (RS485)

Table 149: COM2 (RS232, RS485)

Interface	Pin	Description
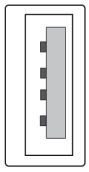	1	VCC
	2	D-
	3	D+
	4	GND

Table 150: USB 2.0

Interface	Pin	Description
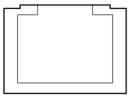	1	TxD+
	2	TxD-
	3	RxD+
	4	NC
	5	NC
	6	RxD-
	7	NC
	8	NC-

Table 151: ETH1, ETH 2.1, ETH 2.2 (RJ45)

Interface	Pin	Description
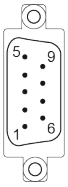	2	CAN-L
	3	CAN-GND
	7	CAN-H

Table 152: CAN1, CAN2

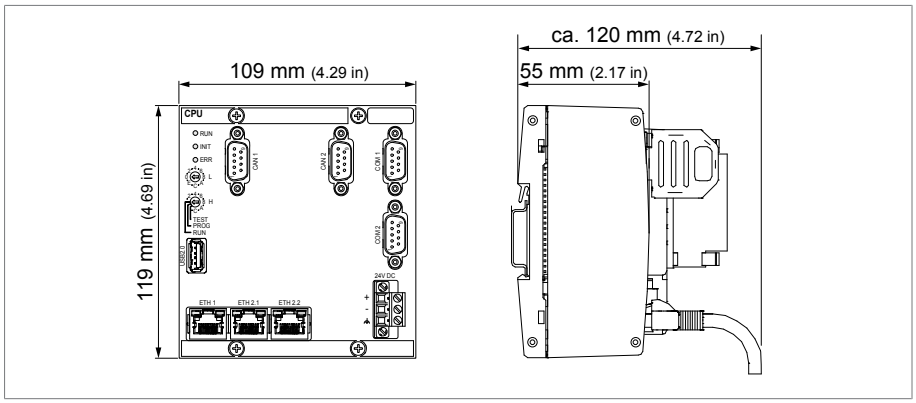

Figure 258: CPU dimensions

Optional accessories	
CAN bus	Terminating resistor ▪ D-SUB plug connector (9-pole) ▪ R = 120 Ω
	Connector with terminal strip for directly connecting CAN lines
Media converter for COM2 interface (only RS232)	Adapter from D-SUB (9-pole) to fiber-optic cable: ▪ ACF660/ST: F-ST, 660 nm, range max. 60 m at 40 kBd ▪ ACF660/SMA: F-SMA, 660 nm, range max. 60 m at 40 kBd ▪ ACF850/ST: F-ST, 850 nm, range max. 1,000 m at 40 kBd ▪ ACF850/SMA: F-SMA, 850 nm, range max. 1,000 m at 40 kBd

Table 153: Optional accessories

15.3.7 System networking

	MC 2-2
Description	Media converter
Interfaces	2x RJ45 2x duplex LC (SFP)
RJ45	Max. 100 m (per section) 10/100 Mbit/s Cable impedance 100 Ω
Fiber-optic cable	Max. 2,000 m 100 Mbit/s Light-emitting diode: class 1 Wave length: 1310 nm Max. optical output power: <1 mW (in accordance with IEC 60825-1:2014)

Table 154: Technical data for the MC 2-2 assembly

	SW 3-3
Description	Managed fast Ethernet switch per IEEE 802.3, store-and-forward switching
Interfaces	Media converters: ▪ 1x RJ45 ▪ 1x duplex LC (SFP) Managed switch with redundancy function: ▪ 2x RJ45 ▪ 2x duplex LC (SFP)
Redundancy protocols	PRP[1], RSTP

	SW 3-3
Time synchronization	PTPv2 (IEEE 1588-2008)
RJ45	Max. 100 m (per section) 10/100 Mbps Cable impedance 100 Ω
Fiber-optic cable	Max. 2,000 m 100 Mbps Light-emitting diode: class 1 Wavelength: 1,310 nm Max. optical output power: <1 mW (in accordance with IEC 60825-1:2014)

Table 155: Technical data for the SW 3-3 assembly

[1] Factory setting

Interface	Pin	Description
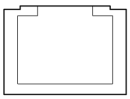	1	TxD+
	2	TxD-
	3	RxD+
	4	NC
	5	NC
	6	RxD-
	7	NC
	8	NC-

Table 156: ETHxx (RJ45)

Interface	Description
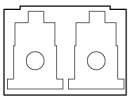	Fiber glass 50/125 and 62.5/125 multimode

Table 157: ETHxx (duplex LC SFP)

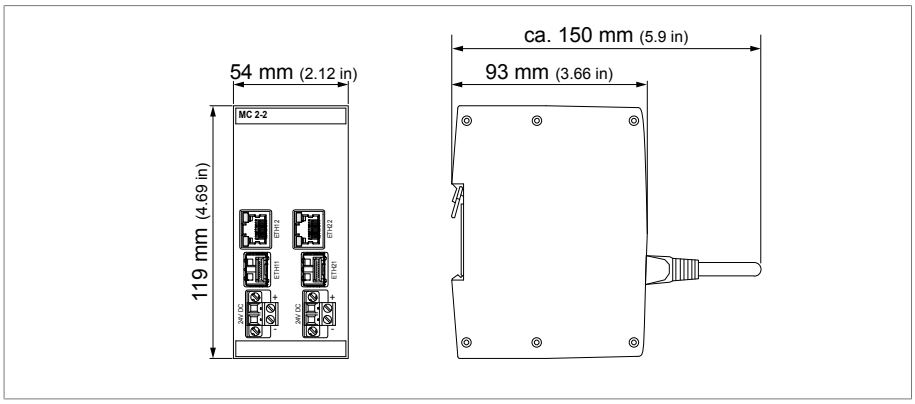

Figure 259: MC2-2 and SW3-3 dimensions

15.4 Tests

Electrical safety

IEC 61010-1	Safety requirements for electrical measurement and control and regulation equipment and laboratory instruments ▪ Protection class 1 ▪ Overvoltage category III ▪ Measurement category IV (UI1/UI3 assembly) ▪ Contamination level 2

Table 158: Electrical safety

EMC tests

IEC 61000-6-2	Immunity requirements for industrial environments
IEC 61000-6-4	Emission class A for industrial environments

Table 159: EMC tests

Glossary

CSO

Change-over selector operation

DGA

Analysis of the gases dissolved in the oil (Dissolved Gas Analysis)

DTR

Dynamic Transformer Rating

EMC

Electromagnetic compatibility

Generator sign convention

Definition for describing electrical circuits. The arrows for current rating and voltage on a "consumer" absorbing electrical power (e.g. a resistor) face opposite directions. U*I is the power generated in the component and -U*I is the power absorbed by the component.

GPI

General Purpose Input

GPO

General Purpose Output

Hot-spot

Point of highest temperature in the transformer winding.

ICD

IED Capability Description

IEEE

Worldwide association of engineers, mainly from the fields of electrical engineering and IT (Institute of Electrical and Electronics Engineers)

IFM

Insulation-friendly mode

IP

Internet Protocol

Load sign convention

Definition for describing electrical circuits. The arrows for current rating and voltage on a "consumer" absorbing electrical power (e.g. a resistor) face the same direction. U*I is the power absorbed by the component.

Motor Current Index

Integral (area under) of the motor current curve over the duration of the tap-change operation.

MQTT

Message Queuing Telemetry Transport. A network protocol for machine-to-machine communication which enables the transmission of ISM® data in the form of messages between two devices.

OLTC PreCheck

Check of the on-load tap-changer operating conditions prior to a tap-change operation to prevent damage to the on-load tap-changer and transformer.

PRD

Pressure relief device

PRP

Redundancy protocol in accordance with IEC 62439-3 (Parallel Redundancy Protocol)

PTP

PTP (Precision Time Protocol) is a standard for synchronizing clocks in a computer network. This synchronization is high-precision.

RADIUS

Protocol for authentication of users in computer networks in accordance with RFC 2865 (Remote Authentication Dial-In User Service).

RSO

Reverse tap-change operation

RSTP

Redundancy protocol in accordance with IEEE 802.1D-2004 (Rapid Spanning Tree Protocol)

SCADA

Technical processes are monitored and controlled using a computer system (Supervisory Control and Data Acquisition)

SNTP

NTP (Network Time Protocol) is a standard for synchronizing clocks in computer systems using packet-based communication networks. SNTP (Simple Network Time Protocol) is the simplified version of NTP.

TDSC

TAPCON® Dynamic Set Point Control

TPLE

Transformer Personal Logic Editor

TSO

Tap selector operation

URL

Uniform Resource Locator

List of key words

A

B

C

D

E

F

G

H

I

K

L

M

N

O

P

Q

R

S

T

U

V

W

Z

Maschinenfabrik Reinhausen GmbH
Falkensteinstrasse 8
93059 Regensburg

+49 (0)941 4090-0
sales@reinhausen.com

www.reinhausen.com

8127448/00 EN - ETOS® TD -
- 06/21 - Maschinenfabrik Reinhausen GmbH 2021

THE POWER BEHIND POWER.