Transport monitor
MESSKO® MLOG
Operating instructions

9121348/00 EN

The original operating instructions were written in German.

Table of contents

1 Introduction ... 6

1.1 Manufacturer ... 6

1.2 Completeness ... 6

1.3 Safekeeping ... 6

1.4 Notation conventions ... 6

1.4.1 Hazard communication system ... 6

1.4.2 Information system ... 7

1.4.3 Instruction system ... 8

1.4.4 Typographic conventions ... 8

2 Safety ... 10

2.1 Intended use ... 10

2.2 Fundamental safety instructions ... 10

2.3 Personnel qualification ... 12

3 Product description ... 13

3.1 Scope of delivery ... 13

3.2 Function description ... 13

3.3 Versions ... 13

3.4 Design ... 14

3.5 MESSKO® MLOG software ... 15

3.6 Nameplate ... 16

4 Packaging, transport and storage ... 17

4.1 Purpose ... 17

4.2 Suitability, structure and production ... 17

4.3 Markings ... 17

4.4 Transportation, receipt and handling of shipments ... 17

4.5 Storage of shipments ... 19

4.6 Further transport ... 19

Table of contents

5 Commissioning ... 20

5.1 Electromagnetic compatibility ... 21

5.2 Replacing the batteries ... 22

5.3 Installing the software ... 22

5.4 Preparing the device for transport monitoring ... 23

6 Mounting ... 26

6.1 Mounting the device ... 26

7 Operation ... 28

7.1 MESSKO® MLOG IM50 operation ... 28

7.1.1 Ending sleep mode ... 28

7.1.2 Checking the battery status ... 28

7.1.3 Checking the operating mode and memory status ... 29

7.1.4 Starting a recording ... 29

7.2 MESSKO® MLOG IM100 operation ... 30

7.2.1 Ending sleep mode ... 31

7.2.2 Querying the battery status via LEDs ... 31

7.2.3 Querying the remaining operating time via display ... 32

7.2.4 Checking the operating mode and memory status ... 32

7.2.5 Checking the number of alarms ... 33

7.3 Displaying a shock ... 33

7.4 Operating the device during transport monitoring ... 33

7.4.1 Changing the batteries ... 33

7.4.2 Setting a user marker ... 34

7.5 Removing the device ... 35

7.6 Evaluating the transport progression ... 35

8 Maintenance, inspection and care ... 37

8.1 Updating the firmware ... 37

9 Disposal 38

10 Technical data 39

11 Drawings 42

11.1 6991618_000 43

11.2 6991005_000 44

Glossary 45

1 Introduction

This technical document contains detailed descriptions on the safe and proper installation, connection, commissioning and monitoring of the product.

This technical document is intended solely for specially trained and authorized personnel.

1.1 Manufacturer

Maschinenfabrik Reinhausen GmbH
Falkensteinstrasse 8
93059 Regensburg
Germany

Tel.: +49 941 4090-0
E-mail: sales@reinhausen.com
Internet: www.reinhausen.com
MR Reinhausen customer portal: https://portal.reinhausen.com

Further information on the product and copies of this technical file are available from this address if required.

1.2 Completeness

This technical file is incomplete without the supporting documents.

The following documents apply to this product:

- Operating instructions
- Works certification

1.3 Safekeeping

Keep this technical file and all supporting documents ready at hand and accessible for future use at all times.

1.4 Notation conventions

This section contains an overview of the symbols and textual emphasis used.

1.4.1 Hazard communication system

Warnings in this technical file are displayed as follows.

1.4.1.1 Warning relating to section

Warnings relating to sections refer to entire chapters or sections, sub-sections or several paragraphs within this technical document. Warnings relating to sections have the following format:

⚠ WARNING

Type of danger!

Source of the danger and its consequences.

- ► Action
- ► Action

1.4.1.2 Embedded warning information

Embedded warnings refer to a particular part within a section. These warnings apply to smaller units of information than the warnings relating to sections. Embedded warnings use the following format:

⚠ DANGER! Instruction for avoiding a dangerous situation.

1.4.1.3 Signal words

Depending on the product, the following signal words are used:

Signal word	Meaning
DANGER	Indicates a hazardous situation which, if not avoided, will result in death or serious injury.
WARNING	Indicates a hazardous situation which, if not avoided, could result in death or serious injury.
CAUTION	Indicates a hazardous situation which, if not avoided, could result in minor or moderate injury.
NOTICE	Indicates measures to be taken to prevent damage to property.

Table 1: Signal words in warning notices

1.4.2 Information system

Information is designed to simplify and improve understanding of particular procedures. In this technical file it is laid out as follows:

Important information.

1.4.3 Instruction system

This technical file contains single-step and multi-step instructions.

Single-step instructions

Instructions which consist of only a single process step are structured as follows:

Aim of action

✓ Requirements (optional).

► Step 1 of 1.

⇨ Result of step (optional).

⇨ Result of action (optional).

Multi-step instructions

Instructions which consist of several process steps are structured as follows:

Aim of action

✓ Requirements (optional).

1. Step 1.

   ⇨ Result of step (optional).

2. Step 2.

   ⇨ Result of step (optional).

⇨ Result of action (optional).

1.4.4 Typographic conventions

Typographic convention	Purpose	Example
UPPERCASE	Operating controls, switches	ON/OFF
[Brackets]	PC keyboard	[Ctrl] + [Alt]
Bold	Software operating controls	Press **Continue** button

Typographic convention	Purpose	Example
…>…>…	Menu paths	Parameter > Control parameter
Italics	System messages, error messages, signals	*Function monitoring* alarm triggered
[► Number of pages]	Cross reference	[► Page 41].
Dotted underscore	Glossary entry, abbreviations, definitions, etc.	Glossary entry

Table 2: Typographic conventions used in this technical file

2 Safety

- Read this technical file through carefully to familiarize yourself with the product.
- This technical file is a part of the product.
- Read and observe the safety instructions provided in this section in particular.
- Observe the warnings in this technical file to avoid function-related dangers.
- The product is manufactured based on state-of-the-art technology. Nevertheless, risks to life and limb for the user or impairment of the product and other material assets due to the function may arise in the event of improper use.

2.1 Intended use

This device is for monitoring the transport and condition of goods of all types. If used as intended and in compliance with the requirements and conditions specified in this technical document as well as the warning notices contained in this technical document and attached to the product, the product does not pose risk of personal injury or damage to property or the environment. This applies throughout the entire service life of the product, from delivery, installation and operation to removal and disposal.

Intended use refers to the following:

- Operate the product in accordance with this technical document, the agreed-upon delivery conditions and the technical data.
- Ensure that any necessary work is only performed by qualified personnel.
- Only use the accessories included in the delivery for the intended purpose and in accordance with the specifications of this technical document.

2.2 Fundamental safety instructions

To prevent accidents, disruptions and damage as well as unacceptable adverse effects on the environment, those responsible for transport, installation, operation, maintenance and disposal of the product or parts of the product must ensure the following:

Work area

Untidy and poorly lit work areas can lead to accidents.

- Keep the work area clean and tidy.
- Make sure that the work area is well lit.
- Observe the applicable laws for accident prevention in the relevant country.

Explosion protection

Highly flammable or explosive gases, vapors and dusts can cause serious explosions and fire.

- Do not install or operate the product in areas where a risk of explosion is present.

Safety markings

Warning signs and safety information plates are safety markings on the product. They are an important aspect of the safety concept. Safety markings are depicted and described in the chapter "Product description".

- Observe all safety markings on the product.
- Make sure all safety markings on the product remain intact and legible.
- Replace safety markings that are damaged or missing.

Ambient conditions

To ensure reliable and safe operation, the product must only be operated under the ambient conditions specified in the technical data.

- Observe the specified operating conditions and requirements for the installation location.

Modifications and conversions

Unauthorized or inappropriate changes to the product may lead to personal injury, material damage and operational faults.

- Only modify the product after consultation with Maschinenfabrik Reinhausen GmbH.

Spare parts

Spare parts not approved by Maschinenfabrik Reinhausen GmbH may lead to physical injury, damage to the product and malfunctions.

- Only use spare parts that have been approved by Maschinenfabrik Reinhausen GmbH.
- Contact Maschinenfabrik Reinhausen GmbH.

Working during operation

You must only operate the product when it is in a sound operational condition. Otherwise it poses a danger to life and limb.

- Regularly check the operational reliability of safety equipment.
- Perform the inspection tasks described in this technical document regularly.

2.3 Personnel qualification

The person responsible for assembly, commissioning, operation and inspection must ensure that personnel are sufficiently qualified.

Operator

The operator uses and operates the product in line with this technical document. The operating company provides the operator with instruction and training on the specific tasks and the associated dangers arising from improper handling.

3 Product description

This chapter contains an overview of the design and function of the product.

3.1 Scope of delivery

The following components are included in the delivery:

- Transport monitor
- Technical documents
- USB stick with MESSKO® MLOG software
- 6 LR14 batteries 1.5 V Varta 4014
- Connection cable USB 2.0, type A – mini B (5-pin)
- Mounting kit (4 hexagon nuts, 4 washers, 4 spring washers)
- 2 adhesive labels with the notice "Transport is under surveillance"
- Fixation plate for welding (optional)

Please note the following:

- Check the shipment against the shipping documents for completeness
- Store the parts in a dry place until installation
- The product must remain in the packaging and may only be removed immediately before installation

3.2 Function description

The device is mounted in a secure position on goods being transported to record, for example, acceleration values during the transport via sensors. As soon as any set limit values are exceeded, the data is stored permanently and the limit violation is displayed on the device. In this way, any harmful loads on the transported goods during transport can be detected in good time. The progression of the transportation can be visualized. Monitored goods can include: heavy loads, such as power transformers, generators, satellites, paper rolls, etc.

3.3 Versions

The device is made up of a weather-resistant, impact-resistant polymer housing with thermoplastic protectors. It is available in the following versions:

3 Product description

MESSKO® MLOG IM50

- Measurement of acceleration in the X, Y and Z directions
- Measurement of the ambient temperature
- Measurement of the ambient humidity
- Registration of the GPS position (optional)

MESSKO® MLOG IM100

- Measurement of acceleration in the X, Y and Z directions
- Measurement of the ambient temperature
- Measurement of the ambient humidity
- Display
- Registration of the GPS position (optional)
- 6 universal inputs (optional)
- 2 digital inputs (optional)

3.4 Design

Figure 1: MESSKO® MLOG IM50

1	3 LEDs for status monitoring	2	ON and OFF keys

Figure 2: MESSKO® MLOG IM100

1	3 LEDs for status monitoring	2	Control pad
3	DISPLAY ON and DISPLAY OFF keys	4	3 softkeys
5	Display		

3.5 MESSKO® MLOG software

The software is on the supplied USB stick; this stick can be used to install the software on a PC. The software enables you to configure the device for recording prior to transport. After transport, you can evaluate the progression of the transport via the software. You can establish the connection between the device and the software via the supplied USB cable.

3.6 Nameplate

Figure 3: Nameplate on the rear of the device

4.1 Purpose

The packaging is designed to protect the packaged product during transport, loading, unloading and during periods of storage in such a way that no detrimental changes occur. The packaging must protect the goods against permitted transport stresses such as vibration, knocks and moisture (rain, snow, condensation).

The packaging also prevents the packaged goods from moving impermissibly within the packaging.

4.2 Suitability, structure and production

The goods are packaged in a sturdy cardboard box or solid wooden crate. These ensure that the shipment is secure when in the intended transportation position and that none of its parts touch the loading surface of the means of transport or touch the ground after unloading.

Inlays inside the box or crate stabilize the goods, preventing impermissible changes of position and protecting them from vibration.

4.3 Markings

The packaging bears a signature with instructions for safe transport and correct storage. The following symbols apply to the shipment of non-hazardous goods. Adherence to these symbols is mandatory.

	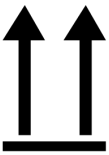			
Protect against moisture	Top	Fragile	Attach lifting gear here	Center of mass

Table 3: Shipping pictograms

4.4 Transportation, receipt and handling of shipments

In addition to vibrations, jolts must also be expected during transportation. In order to prevent possible damage, avoid dropping, tipping, knocking over and colliding with the product.

Should the packaging tip over or fall, damage is to be expected regardless of the weight.

4 Packaging, transport and storage

Every delivered shipment must be checked for the following by the recipient before acceptance (acknowledgment of receipt):

- Completeness based on the delivery slip
- External damage of any kind.

The checks must take place after unloading, when the box or transport container can be accessed from all sides.

Visible damage

If externally visible transport damage is detected upon receipt of the shipment, proceed as follows:

- Immediately record the transport damage found in the shipping documents and have this countersigned by the deliverer.
- In the event of severe damage, total loss or high damage costs, immediately notify the sales department at Maschinenfabrik Reinhausen GmbH and the relevant insurance company.
- After identifying damage, do not modify the condition of the shipment further and retain the packaging material until an inspection decision has been made by the transport company or the insurance company.
- Record the details of the damage on-site immediately with the transport company involved. This is essential for any claim for damages!
- If possible, photograph damage to packaging and packaged goods. This also applies to signs of corrosion on the packaged goods due to moisture (rain, snow, condensation) infiltrating the packaging.
- Make sure you also check the sealed packaging.

Hidden damage

In the event of damage that is not detected until unpacking after receipt of the shipment (hidden damage), proceed as follows:

- Make the party potentially responsible for the damage liable as soon as possible by telephone and in writing, and prepare a damage report.
- Observe the time periods applicable to such actions in the respective country. Inquire about these in good time.

With hidden damage, it is very hard to make the transportation company (or other responsible party) liable. Any insurance claims for such damage can be successful only if relevant provisions are expressly included in the insurance terms and conditions.

4.5 Storage of shipments

When selecting and setting up the storage location, ensure the following:

- Store the product and accessories in the original packaging until installation.
- Protect stored goods against moisture (rain, flooding, water from melting snow and ice), dirt, pests such as rats, mice, termites etc. and against unauthorized access.
- Store crates and boxes on pallets, timber beams or planks as protection against ground moisture and for improved ventilation.
- Ensure that the foundation has sufficient load-bearing capacity.
- Keep entrance paths clear.
- Check the stored goods at regular intervals. Also take appropriate action after storms, heavy rain or snow etc.

4.6 Further transport

Use the original product packaging for further transport.

If you transport the product to the final installation site in a mounted state, observe the following information in order to protect the product against mechanical damage due to external influences.

Transport packaging requirements

- Select packaging suitable for the duration of transport or storage, taking the climatic conditions into consideration.
- Ensure that the packaging protects the product against transport stress such as shaking, vibrations and impacts.
- Ensure that the packaging protects the product against moisture such as rain, snow and condensation.
- Ensure that the packaging allows for sufficient air circulation in order to prevent the formation of condensation.

5 Commissioning

This chapter describes how to commission the device correctly.

Observe the following danger notice:

NOTICE

Damage to the device!

Electrostatic discharge can lead to damage to the device.

► Take precautionary measures to prevent the build-up of electrostatic charges on work surfaces and personnel.

5.1 Electromagnetic compatibility

The device has been developed in accordance with the applicable EMC standards. The following points must be observed in order to maintain the EMC standards:

Canada	CAN ICES-3 (B)/NMB-3(B)
USA	FCC Part 15 Clause 15.105 Note: This equipment has been tested and found to comply with the limits for a Class A digital device, pursuant to part 15 of the FCC Rules. These limits are designed to provide reasonable protection against harmful interference in a residential installation. This equipment generates, uses and can radiate radio frequency energy and, if not installed and used in accordance with the instructions, may cause harmful interference to radio communications. However, there is no guarantee that interference will not occur in a particular installation. If this equipment does cause harmful interference to radio or television reception, which can be determined by turning the equipment off and on, the user is encouraged to try to correct the interference by one or more of the following measures: ▪ Reorient or relocate the receiving antenna. ▪ Increase the separation between the equipment and receiver. ▪ Connect the equipment into an outlet on a circuit different from that to which the receiver is connected. ▪ Consult the dealer or an experienced radio/TV technician for help.
	FCC Part 15 Clause 15.21 Changes or modifications not expressly approved by the party responsible for compliance could void the user's authority to operate the equipment.
	FCC Part 15.19(a) This device complies with part 15 of the FCC Rules. Operation is subject to the following two conditions: (1) This device must not cause harmful interference, and (2) this device must accept any interference received, including interference that may cause undesired operation.

5.2 Replacing the batteries

Figure 4: Opened device rear

1	10 cross recessed head screws	2	Battery for the real-time clock (type CR1225)
3	6 LR14 alkaline batteries		

Batteries can leak when they are dead. In the event of not using the device for a long period, remove the batteries.

1. Remove the 10 cross recessed head screws on the rear of the device and remove the rear panel.
2. Replace the 6 LR14 alkaline batteries.
3. Replace the rear panel. When doing so, ensure that the gasket is clean and undamaged.
4. Lightly tighten the 10 cross recessed head screws crosswise several times.
5. Tighten the screws with a torque of 1.8 Nm.

5.3 Installing the software

You can download the software from the Maschinenfabrik Reinhausen GmbH customer portal or install it via the supplied USB stick.

The MESSKO® MLOG software is a 32-bit application. From an operating system of Microsoft Windows 7 or later, the software can be used both with Windows 32-bit and in Windows 64-bit systems. It may be that you need administrator rights.

5.4 Preparing the device for transport monitoring

You must configure the device via the MESSKO® MLOG software prior to each transport monitoring action. Which settings you have to make depends on the application. An example preparation for transport is described in the following.

If the [*] symbol appears alongside the title of a window or a menu entry, this means that the changes made have not yet been saved and have not yet been transferred to the connected device. As soon as you switch to another area, a system message appears via which you can transfer the changes.

Establishing a connection between the device and software

1. Insert [▶Section 5.2, Page 22] a new set of batteries in the device.
2. Start the software on the PC.
3. Connect the device to the PC via the USB cable.
4. In the **MLOG > Connection >** menu, select **Establish Connection to MLOG**.
5. Select the connected device.

⇨ The connected device will be displayed in the "Connected MLOG" window and the "Online" LED flashes green in the "Connection State" window.

Configuring base settings

1. In the "Connected MLOG" window, select **Device Information** and check the data displayed.
2. In the "Connected MLOG" window, select **Configuration** > **Base Settings**.
3. In the "MLOG: Base Settings" window, enter a name for the transport project and select the language.

Configuring the recording settings

1. In the "Connected MLOG" window, select **Configuration** > **Recording Settings**.

2. In the "MLOG: Recording Settings" window, set whether the device is to record data in a specific time interval and/or when limit values are exceeded.
3. Optionally (only with devices with GPS module) configure the GPS data recording function. Select the **per Time Interval** checkbox, select the **if exceeding an Alert Limit** checkbox, and set the time interval.
4. Set the start time and end time for the transport recording. ***NOTICE!*** Because the device determines the installation position as being the normal position when recording starts, the recording may only be started after mounting the device [▶Section 6.1, Page 26]. This position is necessary for the correct determination of the acceleration values.

Configuring the acceleration, humidity and ambient temperature

1. In the "Connected MLOG" window, select **Configuration** > **Recording Settings > Internal Sensors > Acceleration**.
2. In the "MLOG: Acceleration" window, select the **Acceleration activated** checkbox and the **Alert Limit** checkbox, and set the desired limit value.
3. In the "Connected MLOG" window, select **Configuration** > **Recording Settings > Internal Sensors > Air Humidity**.
4. In the "MLOG: Air Humidity" window, select the **Air Humidity activated** checkbox and the **Upper Alert Limit** checkbox, and set the desired limit value.
5. Deactivate the **Air Humidity activated** checkbox.
6. In the "Connected MLOG" window, select **Configuration** > **Recording Settings > Internal Sensors > Ambient Temperature**.
7. In the "MLOG: Ambient Temperature" window, select the **Ambient Temperature activated** checkbox and the **Upper Alert Limit** checkbox and set the desired limit value.
8. Deactivate the **Ambient Temperature activated** checkbox.

Completing the configuration

1. As an option, go to **MLOG > Configuration > Create Configuration Template** to create a configuration template. Go to **File > Save** to save the template.
2. Go to **MLOG > Connection > Cut Connection to MLOG** to cut the connection between the device and the software. Remove the USB cable.

3. Briefly press the ON key or the DISPLAY ON key on the device.

⇨ The ACTIVE LED lights up for 3 seconds. The device has been configured and the device is ready for transport recording.

6 Mounting

This chapter describes how to correctly mount the device.

NOTICE

Electrostatic discharges

Damage to the device possible

► Take precautionary measures to prevent the build-up of electrostatic charges on work surfaces and personnel.

6.1 Mounting the device

To ensure that the device functions correctly, observe the following mounting conditions:

- Affix the device to the transport goods in a position that ensures protection against external damage.
- To prevent incorrect monitoring data, mount the device on structures of the transport goods that are not flexible and that cannot rock or vibrate due to transport motions.
- When selecting the installation position, ensure that GPS communication signals are not blocked or weakened by metal structures such as cover plates. Ideally, there should be an unobstructed view of the sky over at least a 180° sector.

Mounting the device:

1. Taking the listed mounted conditions into consideration, drill 4 holes at the installation position. For the diameter and clearance of the drill holes, refer to the hole pattern in the attached drawing.
2. **NOTICE!** To avoid damage, observe the specified tightening torque of 15…20 Nm.
3. Affix the device with 4 suitable screws and with the supplied mounting materials.

4. Optional: Weld the fixation plate for welding (available as an option) to a level surface of the transport goods and mount the device onto this using the supplied mounting materials.

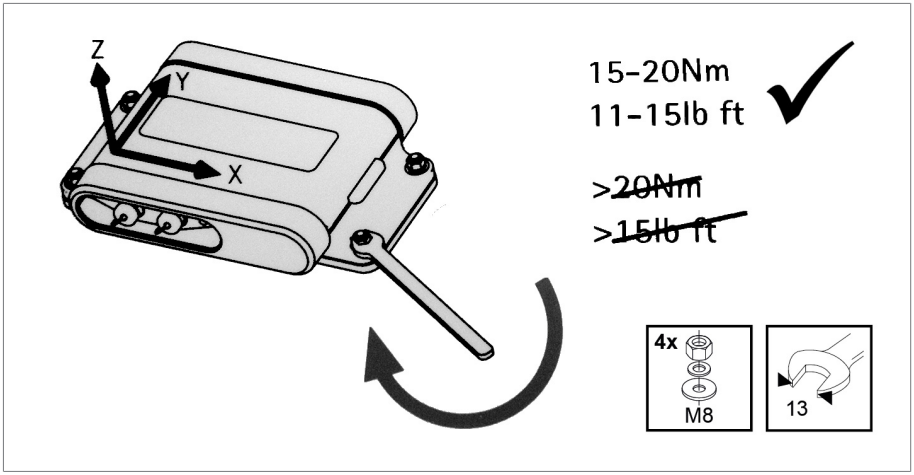

Figure 5: Graphical representation on the inside of the housing cover

7 Operation

7.1 MESSKO® MLOG IM50 operation

If the batteries are low, it is not possible to start a new recording. Only the timer recording (without GPS) starts.

Operate the device with the ON and OFF keys.

Figure 6: MESSKO® MLOG IM50

1	3 LEDs for status monitoring	2	ON and OFF keys

7.1.1 Ending sleep mode

If a key is not pressed, the device will switch to sleep mode after 4 minutes. To be able to further operate the device, you must end sleep mode:

► Press the ON key for longer than 2 seconds.

⇨ The ACTIVE LED and EVENT/ALARM LED light up for longer than 3 seconds.

⇨ Sleep mode has been ended. The device is active again.

7.1.2 Checking the battery status

► Briefly press the ON key.

Behavior	Meaning	Action
BATTERY LED flashes for 5 seconds	Battery status low	Change the batteries
BATTERY LED does not light up	Battery status sufficient	You can call up the prognosis of the remaining recording time via the software

Table 4: Checking the battery status

7.1.3 Checking the operating mode and memory status

► Briefly press the ON key.

Behavior	Meaning	Action
▪ ACTIVE LED lights up for 3 seconds ▪ EVENT/ALARM LED does not light up	Ready for recording Memory empty	-
▪ ACTIVE LED lights up for 3 seconds ▪ EVENT/ALARM LED lights up for 3 seconds	Recording not active Logbook in the memory	Read out logbook via the software and delete if necessary
▪ ACTIVE LED flashes for 3 seconds ▪ EVENT/ALARM LED does not light up	Recording running No alarm in the logbook	-
▪ ACTIVE LED flashes for 3 seconds ▪ EVENT/ALARM LED flashes for 5 seconds	Recording running At least 1 alarm in the logbook	Check the logbook via the software

Table 5: Check the operating mode and memory status

7.1.4 Starting a recording

► Press the ON key for longer than 4 seconds.

⇨ ACTIVE LED flashes for 3 seconds. The memory is empty and no recordings are being made.

⇨ The recording starts.

The following behavior indicates that the recording will not start:

Behavior	Meaning
EVENT/ALARM LED flashes for 5 seconds	Memory not empty
BATTERY LED flashes for 5 seconds	Battery status not sufficient
No LEDs light up	A recording is already underway OR The ON key was pressed for between 2 and 4 seconds

Table 6: Recording does not start

7.2 MESSKO® MLOG IM100 operation

If the batteries are low, it is not possible to start a new recording. Only the timer recording (without GPS) starts.

Operate the device with the DISPLAY ON and DISPLAY OFF keys, via the LEDs or via the display. Navigate through the display and confirm entries made using the control pad and the softkeys.

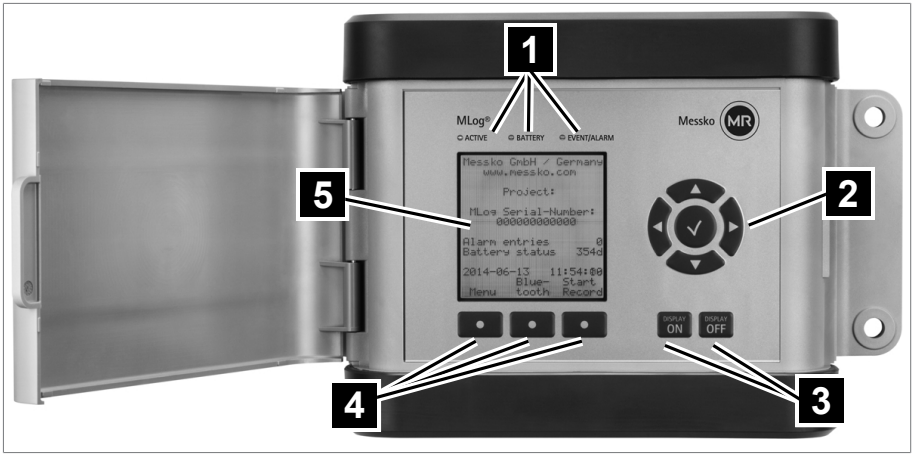

Figure 7: MESSKO® MLOG IM100

1	3 LEDs for status monitoring	2	Control pad
3	DISPLAY ON and DISPLAY OFF keys	4	3 softkeys
5	Display		

7.2.1 Ending sleep mode

If a key is not pressed, the display automatically switches off after 4 minutes and the device will switch to sleep mode. To be able to further operate the device, you must end sleep mode:

► Press the DISPLAY ON key for longer than 2 seconds.

⇨ Sleep mode has been ended. The display switches on and the device is active.

7.2.2 Querying the battery status via LEDs

► Briefly press the DISPLAY ON key.

Behavior	Meaning	Action
BATTERY LED flashes for 5 seconds	Battery status low	Change the batteries
BATTERY LED does not light up	Battery status sufficient	You can call up the prognosis of the remaining recording time via the display or via the software

Table 7: Querying the battery status via LEDs

7.2.3 Querying the remaining operating time via display

1. Optional: Press the DISPLAY ON key for longer than 2 seconds to end sleep mode and to switch the display on.
   ⇨ The remaining operating time is displayed in days on the home screen of the display. **NOTICE!** The prognosis of the remaining operating time depends on the actual configuration of the device, for example the time intervals for measurements and GPS data recording. Any potential future shock events or attempts to determine the GPS position after a shock are not taken into consideration.
2. Depending on the duration of the assignment, decide whether to change the batteries.

7.2.4 Checking the operating mode and memory status

► Briefly press the DISPLAY ON key.

Behavior	Meaning	Action
▪ ACTIVE LED lights up for 3 seconds ▪ EVENT/ALARM LED does not light up	Ready for recording Memory empty	-
▪ ACTIVE LED lights up for 3 seconds ▪ EVENT/ALARM LED lights up for 3 seconds	Recording not active Logbook in the memory	Read out logbook via the software and delete if necessary

Behavior	Meaning	Action
▪ ACTIVE LED flashes for 3 seconds ▪ EVENT/ALARM LED does not light up	Recording running No alarm in the logbook	-
▪ ACTIVE LED flashes for 3 seconds ▪ EVENT/ALARM LED flashes for 5 seconds	Recording running At least 1 alarm in the logbook	Check the logbook via the software

Table 8: Check the operating mode and memory status

7.2.5 Checking the number of alarms

1. Optional: Press the DISPLAY ON key for longer than 2 seconds to end sleep mode and to switch the display on.
   ⇨ The number of limit value violations is displayed under the alarm entries in the home screen of the display.
2. Read out the data via the software to analyze the alarms.

7.3 Displaying a shock

If a limit value is exceeded, the device analyzes the shock event. The EVENT/ALARM LED flashes briefly.

7.4 Operating the device during transport monitoring

During transport monitoring, you can check the battery status, the operating mode and the memory status via the LEDs and, in the case of the IM100, also via the display; depending on device version, refer to MESSKO® MLOG IM50 [▶Section 7.1, Page 28] operation or MESSKO® MLOG IM100 [▶Section 7.2, Page 30] operation.

7.4.1 Changing the batteries

In the event of longer transport assignments, it may be necessary to change the batteries during an ongoing transport monitoring action.

If the battery voltage falls below a certain level, the GPS module, included as an option, will be disabled to safeguard the basic functions of the device. Limit value violations for acceleration, temperature and humidity will continue to be detected and recorded. Time-controlled recordings will continue to be made.

To ensure that the prognosis of the remaining battery time works correctly, the USB cable connection to the computer must be removed prior to the battery change.

Registering a battery change

► Depending on the device version, press the OFF key or DISPLAY OFF key longer than 4 seconds.

⇨ The BATTERY LED lights up permanently.

⇨ The event will be registered in the logbook. The device continues recording and detecting limit value violations. GPS (optional) is disabled. The IM100 display is disabled. The batteries must be changed within the next 30 minutes.

Canceling or completing the battery change

► Depending on the device version, press the OFF key or DISPLAY OFF key longer than 4 seconds.

⇨ The BATTERY LED goes out.

⇨ The GPS is enabled, as long as the battery status is sufficient.

7.4.2 Setting a user marker

At any time, you can set markers, for example in the event of a transfer of risk during transport or transfer to another area of responsibility.

► Depending on the device version, press and hold down the OFF key or DISPLAY OFF key. At the same time, briefly press the ON key or DISPLAY ON key.

⇨ The EVENT/ALARM LED lights up for 2 seconds.

⇨ A new event with time stamp will be registered in the logbook. The next marker can be set as soon as the EVENT/ALARM LED goes out.

7.5 Removing the device

After transport monitoring, you can remove the device from the monitored transport goods.

End the recording prior to removal to prevent shock events caused by the removal process.

1. Depending on the device version, press the ON key or DISPLAY ON key for longer than 2 seconds, and then press it **briefly**, and check via the LEDs – and additionally with the IM100 via the display – whether the recording has already been stopped by the timer. If the recording is still running, stop it via the software.
2. Remove the screws and remove the device from the installation position.
3. Optional: Remove the screws on the fixation plate and lift the device off of the plate.

7.6 Evaluating the transport progression

Upon completion of a transport monitoring action, you can read out and save the transport data via the software:

1. Connect the device to the PC via the USB cable.
2. Start the software on the PC.
3. In the **MLOG > Connection >** menu, select **Establish Connection to MLOG**.
4. Select the connected device.
5. Go to **MLOG > Log Book > Read out Log Book from MLOG**.
6. Go to **File > Save** to save the open logbook.
7. In the "Log Books" window, go to **Log Book Entries > Records**.
8. In the "Log Books" window, select the **Show Measuring Data as Diagram** button.
   ⇨ The diagram will be displayed. A curve with the measured values over the entire recording period can be displayed for each sensor via the measuring-data drop-down list.
9. In the "Log Books" window under **Log Book Entries > Records > Recordings by exceeding the alarm limit**, select a desired date.
10. Select an entry for the desired date.

11. In the "Log Books" window, select the **Show Measuring Data as Table** button.
    ⇨ The table will be displayed. The individual sensors can be displayed via the measuring-data drop-down list.
12. Optional: Read out the measured data of the entries for a selected date in the "Details for the Selected Log Book Entry" window.

Generating and saving reports

1. In the "Log Books" window, select the logbook.
2. Select the **Generate Report** button.
3. In the "Report Configuration" window, set the language of the report as well as the number of diagrams of the most powerful shock events (shock duration >1 second).
4. In order to hide irrelevant events for evaluation in the report caused after transport, use the **Start time** and **End time** fields to limit the period considered in the report.
5. Save the report.
    ⇨ The report will be saved as a PDF file.

Saving GPS position data

1. Go to **Measured Data Analysis > Save route** (only with the GPS module) to save the position data as a KMZ file.
2. Display the transport route in Google Earth using the KMZ file.

Preparing the device for the next recording

✓ Ensure that the logbook has been saved.

1. Go to **MLOG > Log Book > Delete Log Book on MLOG** to delete the device logbook.
2. Synchronize the device time with the system time of the connected PC. The time is adopted as UTC (+/-0). A difference set manually on the device (MESSKO® MLOG IM100 only) to form the local time remains unaffected by this process and may have to be corrected.
3. Go to MLOG > Connection > **Cut Connection to MLOG** to cut the connection between the device and the software. Remove the USB cable.

8 Maintenance, inspection and care

The device is maintenance-free.

Check and clean the device after each action as follows:

1. Clean the housing of the device with a dry cloth.
2. Unscrew the device and remove the batteries.
3. Check the device for external damage.
4. Dry and store the device securely until the next action.

8.1 Updating the firmware

1. Download the latest firmware version from the customer portal. To do so, enter the serial number of the device. This is located on the nameplate and in the software on the upper right in the Device Information area.
2. In the software menu, go to **MLOG > Connection > Cut Connection to MLOG**.
3. Go to **MLOG > MLOG Firmware Update**.
4. Follow the instructions in the subsequent windows.
5. Upon successful update completion, go to **MLOG > Connection > Establish Connection to MLOG**.

9 Disposal

Observe the national disposal regulations in the country of use.

Permissible ambient conditions	
Location of use	Transport monitoring Indoors and outdoors, tropic-proof
Operating temperature	-40...+80 °C
Storage temperature	–40...+80 °C
Pressure equalization element	GoreTex membrane; external diameter Ø 14 mm [0.55"] / internal diameter Ø 8 mm [0.31"]
Degree of protection	IP65 in accordance with IEC 60529
Protection class	III

Dimensions and weight	
Housing	Width 297 mm [11.68"]; height 196 mm [7.72"]; depth 59 mm [2.31"]
Basic materials	Basic housing**:** Luran S
	Protectors**:** Softell TKS; resistance against weathering and aging, good resistance against chemicals
Mounting	4 through-holes for M8 screws
Weight	1.8 kg [3.97 lb]

Voltage supply	
Battery type	6 LR14, C-cell, alkaline (Zn/MnO2)
	Nominal voltage: 1.5 V per cell Capacity: min. 7800 mAh Service life 5 years
Connection to PC	Connection cable USB 2.0, type A – mini B (5-pin); cable length 3 m
Real-Time Clock (RTC) battery type	CR1225 Li/MnO2
	Voltage: 3 V Capacity: 48 mAh Service life: 10 years

10 Technical data

Measured values		
Acceleration	Sensor type	3-axis accelerometer
	Measuring range	±16g in the X, Y and Z axes
	Accuracy	See figure "Deviation"
	Sampling rate	1.6 kHz
	Resolution	0.1g
	Minimum shock duration	Setting range from 0 to 1000 ms
Temperature	Measuring range	-40 °C...+125 °C
	Accuracy	±1 °C (Measuring range -20 °C... +80 °C)
	Resolution	0.1 °C
Relative humidity	Measuring range	0...100% rH
	Accuracy	±3% rH (measuring range 20% rH...80% rH)
	Resolution	1% rH

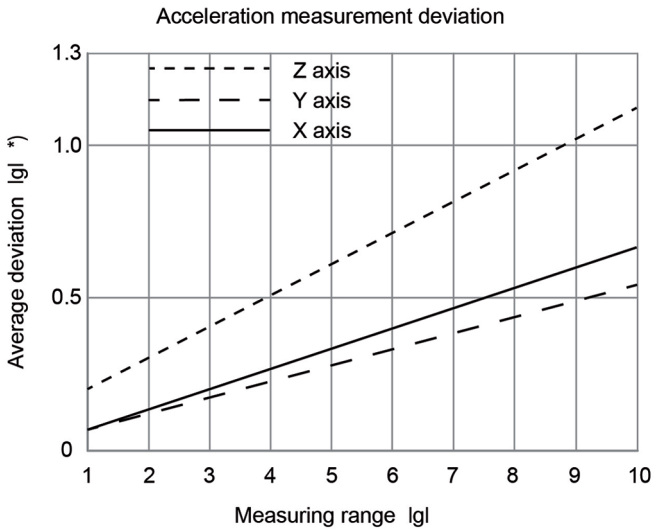

*) Average deviation over the measured devices

Figure 8: Deviation

Optional inputs (IM100 only)		
Digital inputs	Quantity	Max. 2 inputs
	Signal voltage "0"	<0.8 V
	Signal voltage "1"	>2.4 V
	Sampling rate	Setting range from 10 ms
Universal inputs	Quantity	2, 4 or 6 inputs
	Nominal voltage	0...5 V DC
	Resolution	12-bit A/D converter
	Measuring error	0.2% of the measuring range end value
	Internal resistance	>10 kΩ
	Sampling rate	Setting range from 10 ms

Display elements and operating controls	
Status LEDs	ACTIVE – green, BATTERY – yellow, EVENT/ALARM- red
Software	MESSKO® MLOG Software, additional licenses available as an option
Keys	IM50: 2 keys, contacts gold-plated stainless steel
	IM100: 10 keys, contacts gold-plated stainless steel
Display (IM100 only)	LCD display, black/white, 128 x 128 pixels, transreflective

Components		
Data memory	Activation time	<1 ms
	Time	Coordinated Universal Time (date/time)
	Storage medium	Non-volatile EEPROM
	Event log	125,000 events (64 bytes/event)
	Shock log	400 shock events (1.9 s/shock); 1.6 kHz sampling rate
Interfaces	USB	Mini-USB, type B
GPS module (optional)	Transmission values	Longitude and latitude (for geolocation), worldwide

11 Drawings

Refer to the following pages for drawings.

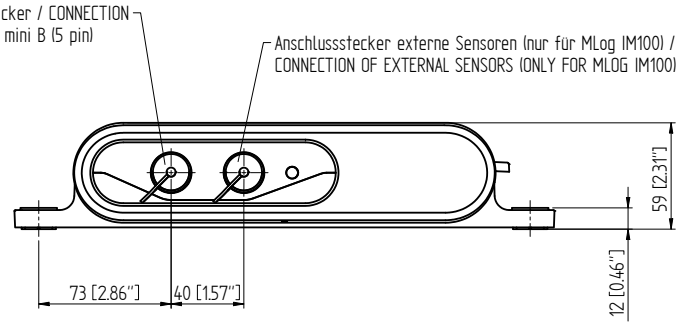

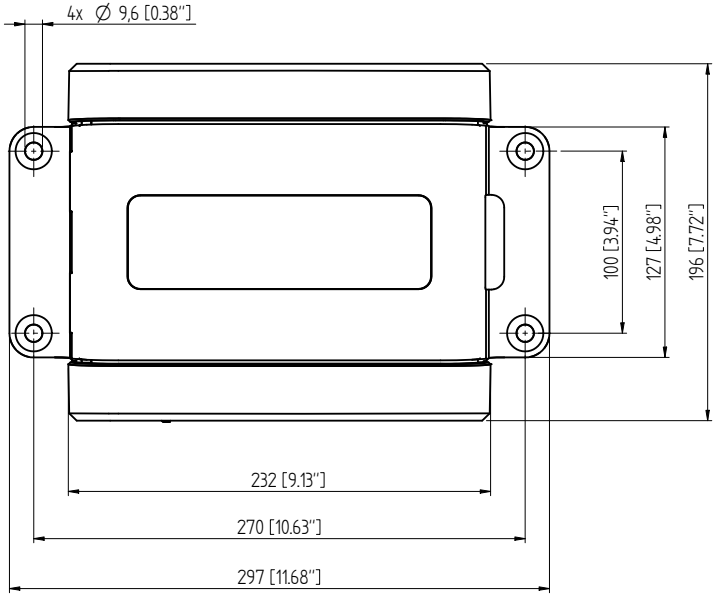

	Datum	Name	Dokumentnummer	
Gez.	-	-	SED 6991618 000 00	
Gepr.	-	-	Änderungsnummer	Maßstab
Norm.	-	-	1096314	12

Maßangaben in mm, soweit nicht anders angegeben

TRANSFORMER ACCESSORIES
MESSKO® MLOG
Abmessungen

Serialnummer

Materialnummer	Blatt
101262700M	1 / 1

A3

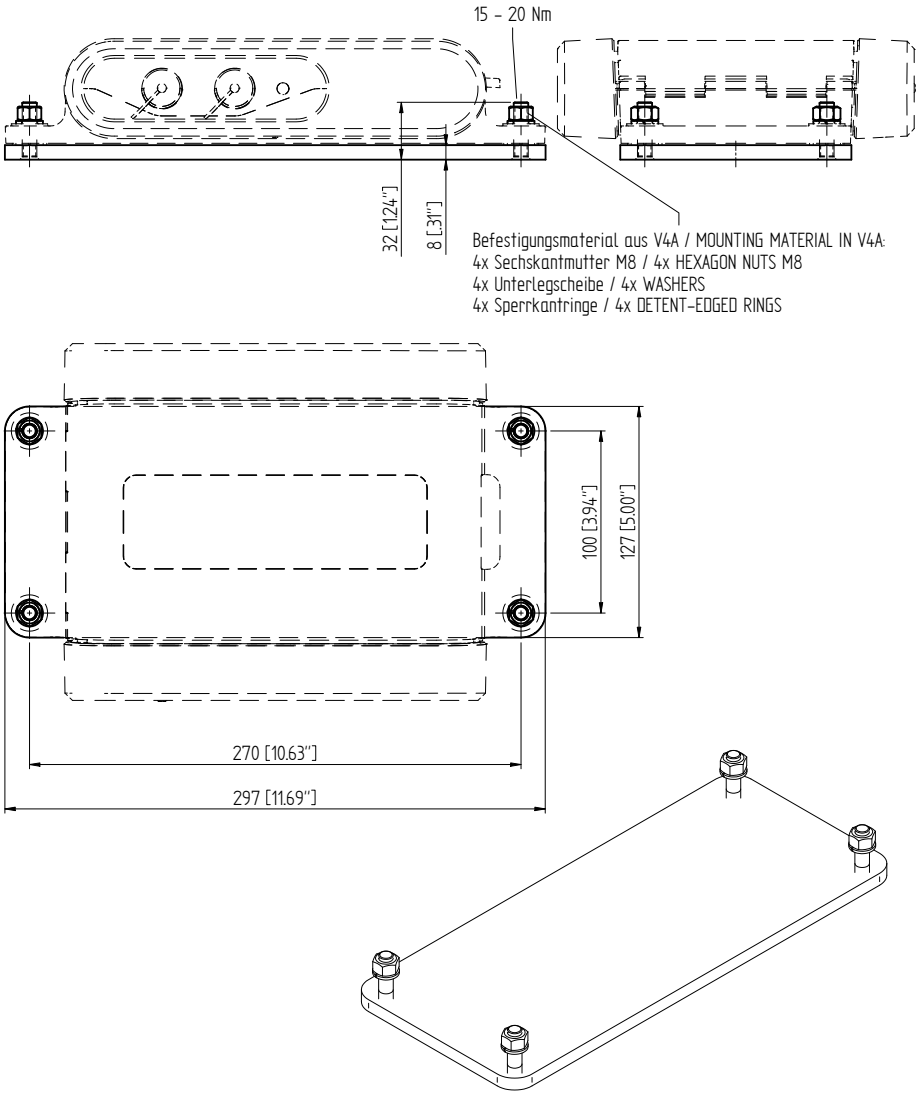

	Datum	Name	Dokumentnummer
Gez.	-	-	SED 6991005 000 00
Gepr.	-	-	Änderungsnummer / Maßstab
Norm.	-	-	1096314 / 12

Maßangaben in mm, soweit nicht anders angegeben

MR

Zubehör Transformator
MESSKO® MLOG
Befestigungsplatte

Serialnummer

Materialnummer: 101262650M

Blatt: 1/ 1

A3

EMC

Electromagnetic compatibility

Operating temperature

Permissible temperature in the immediate surroundings of the device during operation taking ambient influences, for example due to the equipment and installation location, into consideration.

Storage temperature

Permissible temperature for storing the device in an unmounted state or in a mounted state so long as the device is not in operation.

Maschinenfabrik Reinhausen GmbH
Falkensteinstrasse 8
93059 Regensburg

+49 (0)941 4090-0
sales@reinhausen.com

www.reinhausen.com

9121348/00 EN - MESSKO® MLOG -
F0410700 - 12/22 - Maschinenfabrik Reinhausen GmbH 2022

THE POWER BEHIND POWER.