THE POWER BEHIND POWER.

技术数据
MESSKO® MPREC®. 压力释放阀

5785291/05 ZH

© MR 公司保留所有权利
未经明确授权，不得擅自传播和复印本文档，也不得使用或告知他人文档内容。
违者需负赔偿责任。保留所有专利、实用新型和外观设计注册的权利。
上述文档编辑定稿之后，产品可能发生变更。
我们保留更改技术数据、设计和供货范围的权利。
原则上，在处理相应报价和订单时所提供的信息和相关约定都具有约束力。
产品按照 MR 的技术规范交付，该技术规范基于客户提供的信息。客户有义务确保指定产品与客户计划的应用范围兼容。
原版操作说明书采用德语编制。

1 设计/版本

本技术文档中包含了关于本产品技术特性的详细信息。如果想要订购产品，请登录网站 http://www.reinhausen.com，使用相应产品下方的询价和订购规范（“Bestellangabenblatt（Inquiry and order specifications)”）表。更多信息请访问 MR 客户门户网站: https://portal.reinhausen.com。

1.1 带标准防护盖的压力释放阀

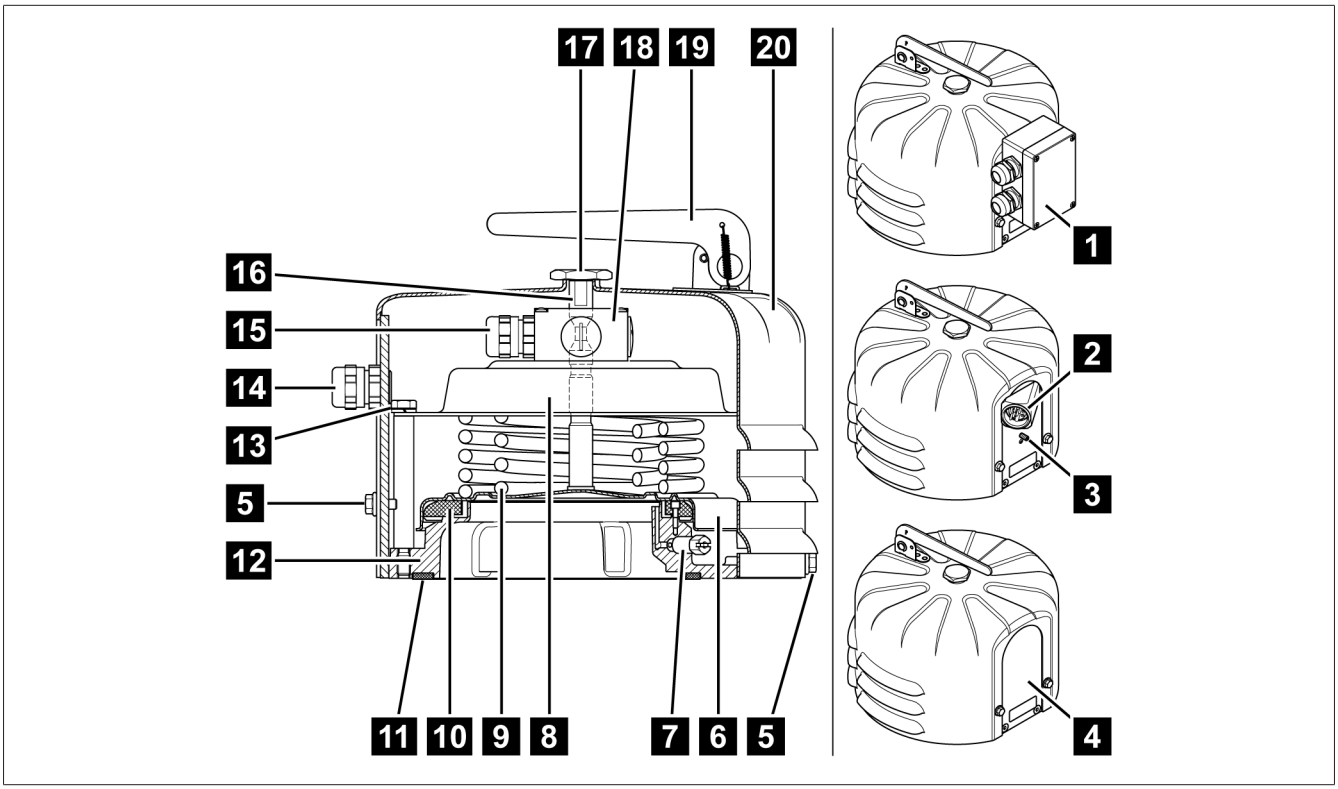

插图 1: 带标准防护盖的压力释放阀

1	端子盒	2	ANSI 插头或西屋插头
3	接地（仅适用于带插头的型号）	4	无连接，无微动开关（钢板无钻孔）
5	3 个 M6x10 外壳螺栓	6	阀板
7	放气塞	8	弹簧组的反向轴承
9	弹簧组	10	垫圈（轴向）和密封唇（径向）
11	安装密封环（可选）	12	设备法兰
13	6 个反向轴承固定螺栓	14	M20x1.5 电缆密封套，适用于直径为 5...14 mm 的电缆（可选 1/2” NPT 适配器用于客户的管接头）
15	微动开关上的 M20x1.5 电缆密封套	16	信号销
17	信号销帽	18	1 个或 2 个微动开关（可选）
19	信号杆（可选）	20	标准防护盖

1.2 带 OD 防护盖的压力释放阀

OD 防护盖上有一个排油口，用于在触发动作时排油。排油口设计成连接到管道的法兰，以便有选择性地排出溢出的油。随附的 O 型圈可密封法兰连接。

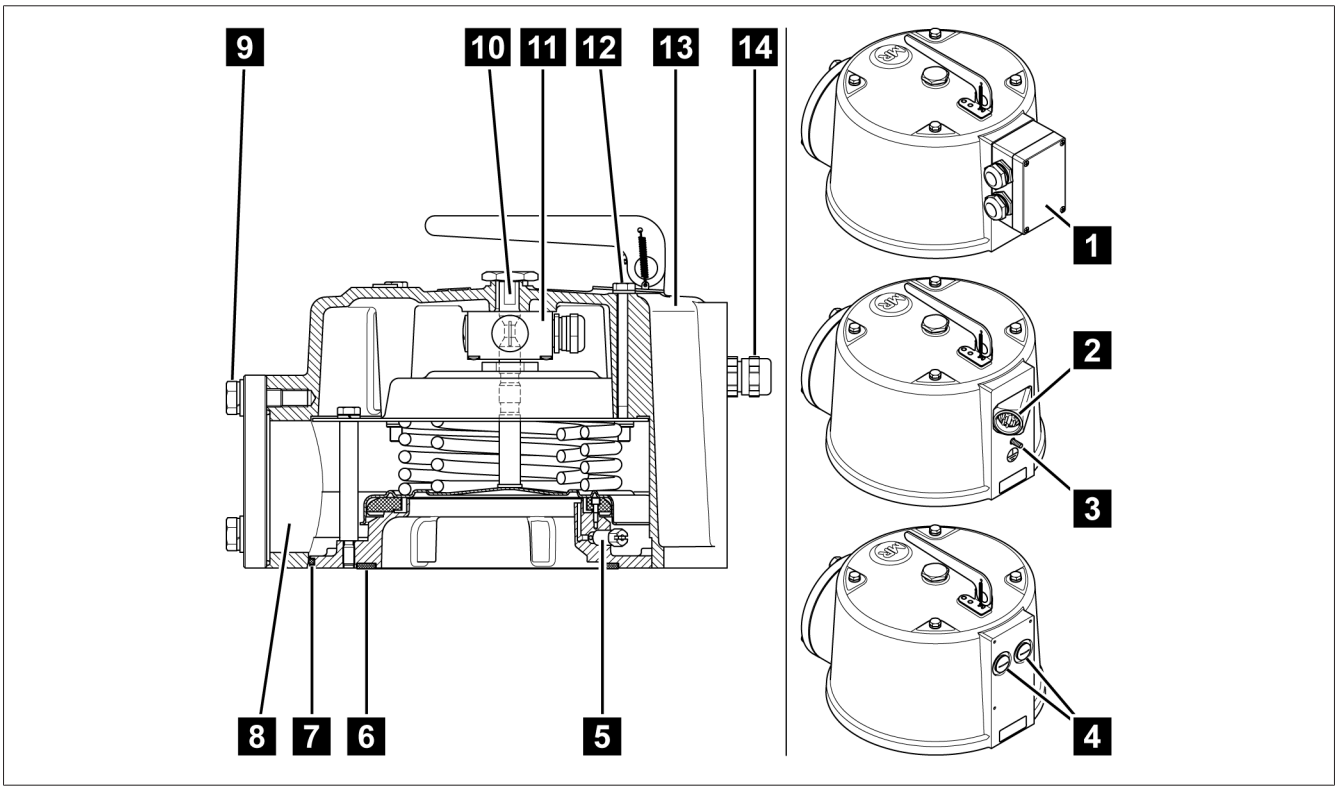

插图 2: 带 OD 防护盖的压力释放阀

1	端子盒	2	ANSI 插头或西屋插头
3	接地（仅适用于带插头的型号）	4	无连接，无微动开关（2 块钢板，带保护接头）
5	放气塞	6	安装密封环（可选）
7	阀和防护盖之间的 O 型圈密封垫	8	排油口
9	管接头，带 O 型圈 95x3 和 3 个带垫圈和锁垫的六角螺栓 M12x40，扳手尺寸为 19	10	信号销，带信号销帽
11	1 个或 2 个微动开关（可选）	12	4 个 M8x100 外壳螺栓
13	OD 防护盖	14	M20x1.5 电缆密封套，适用于直径为 5...14 mm 的电缆（可选 1/2" NPT 适配器用于客户的管接头）

2 技术数据

操作条件	
使用位置	室内和室外；耐热型
环境空气温度	-50°C...+80°C（仅机械型号） -40°C...+80°C（带微动开关的型号）
工作温度	–40°C...+80°C
绝缘液温度	–30°C...+120°C
存储温度	–50°C...+80°C
防护等级 （端子盒、电缆密封套、微动开关）	IP66 符合 IEC 60529
污染程度	3
过电压类别	III；外部防护：最大电流为 16 A 的小型断路器，C 特性

材料	
所有零件	都具有抗风化、耐变压器油的特性；所有外部零件都具有抗紫外特性
	海上型号：所有外部零件还具有耐海水腐蚀特性
设备法兰	防海蚀铝铸件
标准防护盖	带有 RAL 7033 或 RAL 7038 粉末涂层的防海蚀铝材
OD 防护盖	带有 RAL 7033 或 RAL 7038 粉末涂层的防海蚀铝铸件；阀板的密封唇包含在供货范围内
	可选择海上型号： – 符合 DIN 931/933 的 V4A 螺栓 – 符合 EN 60423、ISO 965 的电缆密封套 – 符合 ISO 12944 的涂漆类别 CX
阀板	不锈钢
垫圈材料	– 矿物油为 NBR – 替代绝缘液（硅油、派兰诺油或类似油物）为氟橡胶
弹簧	符合 EN 10270-1 SH 的弹簧钢，带有配置特定零件涂层的压缩弹簧（德语：KTL），用于标识和防腐蚀
信号销	防海蚀铝材；经过阳极化处理
	– 标准密封唇为红色，NBR（矿物油） – 氟橡胶为蓝色（替代绝缘液，例如硅油、派兰诺油或类似油物）
安装密封环（可选）	– 订购号：50032703 适用于 NBR（矿物油） – 订购号：73314900 适用于氟橡胶（替代绝缘液，例如硅油、派兰诺油或类似油物）
放气塞	自锁；不锈钢；扳手尺寸为 10
信号杆	可选；带 RAL 1026 粉末涂层的耐蚀钢，亮黄色；（不适用于海上应用）

尺寸	
固定件	Ø 235 mm [Ø 9.25"] 螺栓圆，带 6 个孔 Ø 15.5 mm [Ø 0.61"]
防护板	Ø 265 mm [Ø 10.43”] 标准防护盖
	Ø 290 mm [Ø 11.42”] OD 防护盖

尺寸	
排油口	仅适用于带 OD 防护盖的型号： – Ø 90 mm [3.54"] 带 O 型圈 95x3；螺栓圆，带 3 个孔 Ø 120 mm [Ø 4.72"] – 带内螺纹 G3 1/4" 的安装法兰或可焊接的安装法兰（可作为选件提供）
高度（触发状态下）	无信号杆的标准防护盖最高 234.5 mm [9.23"] 带信号杆的标准防护盖最高 340 mm [13.39"]
	无信号杆的 OD 防护盖最高 246 mm [9.96"] 带信号杆的 OD 防护盖最高 342 mm [13.46"]
安装密封环	可作为选件提供；Ø 200 mm x Ø 178.5 mm x 4.25 mm [Ø 7.87" x Ø 7.03" x 0.17"]
插头型号的连接电缆长度	1,219 mm [48"]；1,829 mm [72"]；2,134 mm [84"]；2,438 mm [96"]；3,658 mm [144"]；4,572 mm [180"]；5,004 mm [197"]；5,080 mm [200"]；6,096 mm [240"]；7,620 mm [300"]；9,144 mm [360"]；10,000 mm [394"]；11,990 mm [472"]；15,010 mm [591"]；20,110 mm [792"]
重量	约 6 kg（含标准防护盖） 约 11 kg（含 OD 防护盖）

LMPRD [1] 类型	工作压力		
	[psi]	[bar]	[kPa]
4-psi LMPRD	4 ± 1	0.28 ± 0.07	28 ± 6.9
5-psi LMPRD	5 ± 1	0.34 ± 0.07	34 ± 6.9
6-psi LMPRD	6 ± 1	0.41 ± 0.07	41 ± 6.9
8-psi LMPRD	8 ± 1	0.55 ± 0.07	55 ± 6.9
10-psi LMPRD	10 ± 1	0.69 ± 0.07	69 ± 6.9
12-psi LMPRD	12 ± 1	0.83 ± 0.07	83 ± 6.9
15-psi LMPRD	15 ± 2	1.03 ± 0.14	103 ± 13.8
20-psi LMPRD	20 ± 2	1.38 ± 0.14	138 ± 13.8
25-psi LMPRD	25 ± 2	1.72 ± 0.14	172 ± 13.8
30-psi LMPRD	30 ± 2	2.07 ± 0.14	207 ± 13.8
[1] LMPRD = 大型 MESSKO® 压力释放阀			

微动开关		
开关类型	带标准触点（银合金）的开关， 带镀金触点的开关	
触点类型	标准触点：	1 个 NO（常开触点）和 1 个 NC（常闭触点）□ 或 2 个 NO（常开触点）
	镀金触点：	1 个 NO（常开触点）和 1 个 NC（常闭触点）
外壳材料	防海蚀铝材	
额定工作电压	U_e = 240 V	

微动开关			
标准触点切换容量符合 IEC 60076-22-1	最大电流	10 A	30 ms
		24 V DC...220 V DC	
	接通容量	130 W	L/R <40 ms
	开断容量	25 W	L/R <40 ms
		230 V AC	
	接通容量	250 VA	cos φ >0.5
	开断容量	60 VA	cos φ >0.5
切换容量，带镀金触点的开关[2)] [2)] 切换更高的负载会破坏镀金层		24 V DC	
	接通容量	最大 0.1 W	阻性负载
	开断容量	最大 0.1 W	阻性负载
切换特性符合 IEC 60076-22-1	最小介电强度，短时电源工频耐压	2 kV，1 分钟，在电路和接地之间 1 kV，1 分钟，在断开位置的触点之间	
	最小介电强度，雷电冲击耐压	4 kV（峰值），在电路和接地之间 3 kV（峰值），在断开位置的触点之间	

通过电缆密封套连接	
接线端子	单线：0.5...2.5 mm^2，AWG 21...14；带压接套管的电线：0.5...1.5 mm^2，AWG 21...16
电缆密封套	IP66 和海上应用：M20x1.5 适用于电缆直径 5...14 mm；连接电缆不包含在供货范围内
可选 1/2" NPT 适配器	用于客户的管接头
防护等级	对于封闭式设备，为符合 IEC 60529 的 IP66

通过端子盒连接	
接线端子	单线：1...4 mm^2，AWG 18...12；带压接套管的电线：0.5...2.5 mm^2，AWG 21...14
电缆密封套	IP66：M25x1.5 适用于电缆直径 11...20 mm
	海上型号：M25x1.5 适用于电缆直径 11...20 mm，不锈钢
防护等级	对于封闭式设备，为符合 IEC 60529 的 IP66

通过插头连接	
连接电缆	ANSI 插座连接电缆 AWG 16，或 西屋插座连接电缆 AWG 16
防护等级	对于封闭式设备，为符合 IEC 60529 的 IP65

3 图纸

上述文件编辑定稿之后，产品可能发生变更。

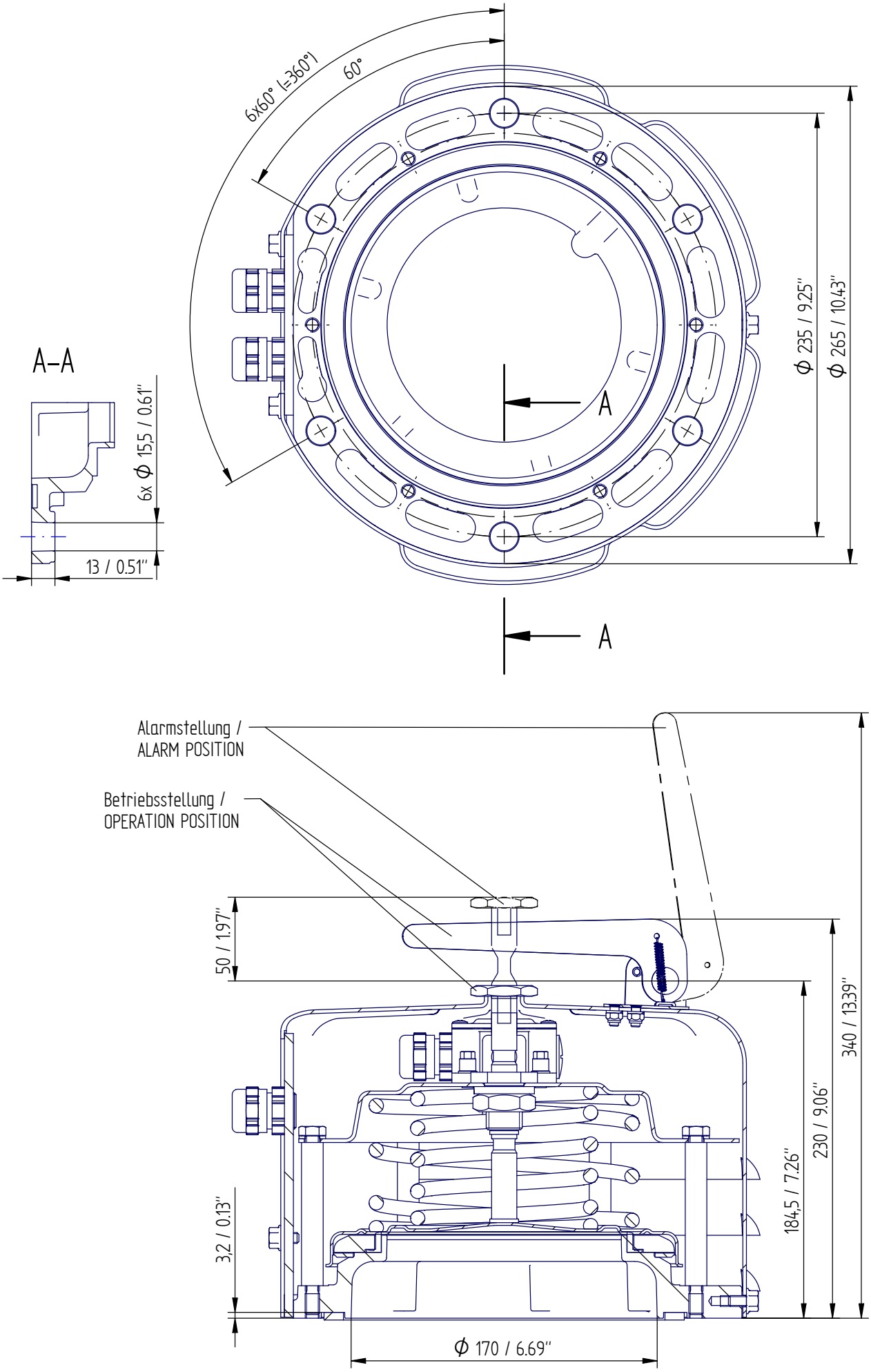

© MASCHINENFABRIK REINHAUSEN GMBH 2020
THE REPRODUCTION, DISTRIBUTION AND UTILIZATION OF THIS DOCUMENT AS WELL AS THE COMMUNICATION OF ITS CONTENTS TO OTHERS WITHOUT EXPRESS AUTHORIZATION IS PROHIBITED. OFFENDERS WILL BE HELD LIABLE FOR THE PAYMENT OF DAMAGES. ALL RIGHTS RESERVED IN THE EVENT OF THE GRANT OF A PATENT, UTILITY MODEL OR DESIGN.

	DATE	NAME	DOCUMENT NO.
DFTR.	-	-	SED 7257026 000 00
CHKD.	-	-	CHANGE NO. / SCALE
STAND.	-	-	1099141 / 1:2

DIMENSION IN mm EXCEPT AS NOTED

MR

TRANSFORMER ACCESSORIES
PRESSURE RELIEF DEVICE MPREC
STANDARD COVER

SERIAL NUMBER
–

MATERIAL NUMBER

SHEET
1/ 1

A3

	DATE	NAME	DOCUMENT NO.	
DFTR.	02.08.2023	THIELEK	SED 7266672 000 03	
CHKD.	02.08.2023	SCHAEFERB	CHANGE NO.	SCALE
STAND.	02.08.2023	KLEYN	1123935	1:2

© MASCHINENFABRIK REINHAUSEN GMBH 2020
THE REPRODUCTION, DISTRIBUTION AND UTILIZATION OF THIS DOCUMENT AS WELL AS THE COMMUNICATION OF ITS CONTENTS TO OTHERS WITHOUT EXPRESS AUTHORIZATION IS PROHIBITED. OFFENDERS WILL BE HELD LIABLE FOR THE PAYMENT OF DAMAGES. ALL RIGHTS RESERVED IN THE EVENT OF THE GRANT OF A PATENT, UTILITY MODEL OR DESIGN.

DIMENSION IN mm EXCEPT AS NOTED

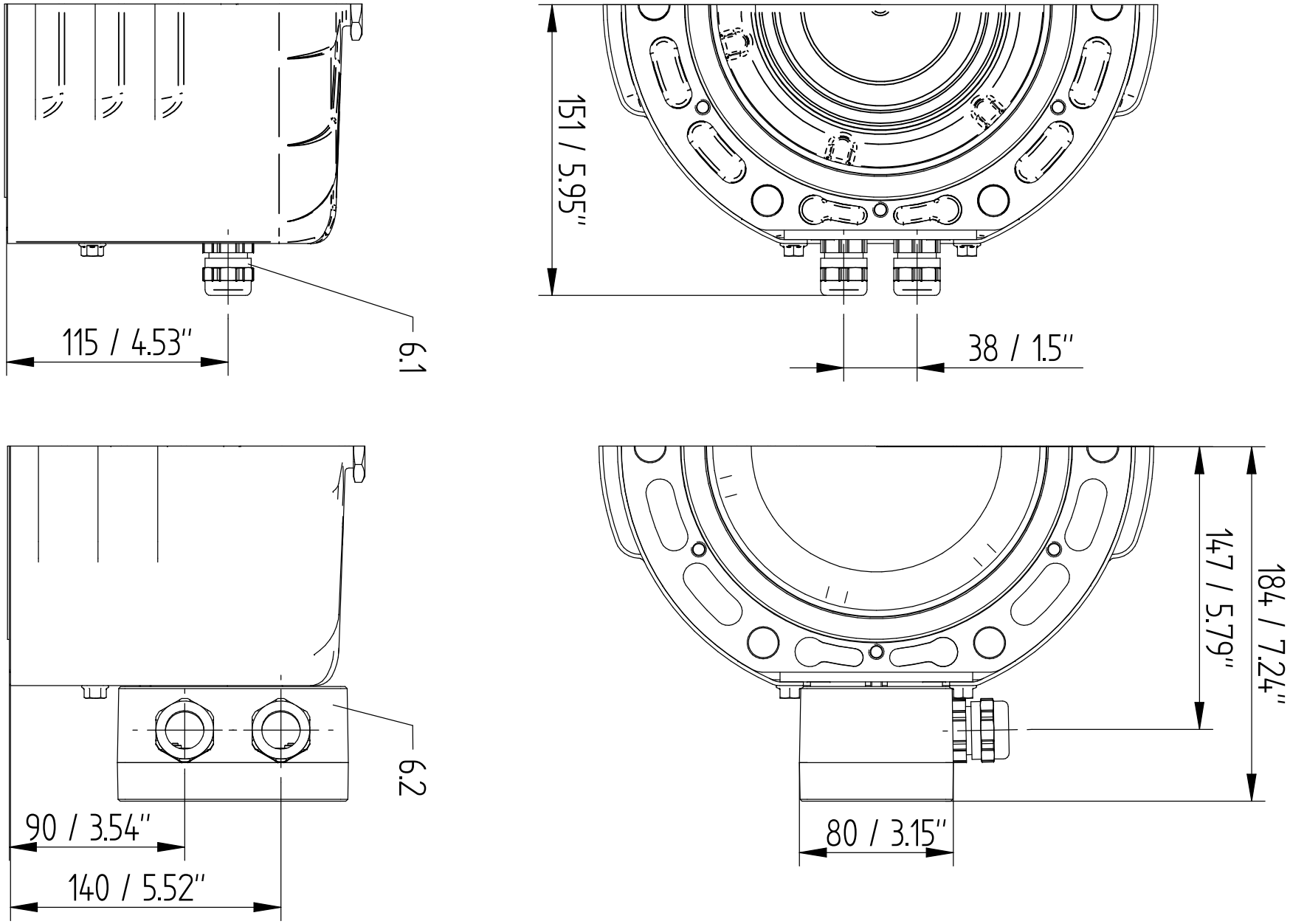

TRANSFORMER ACCESSORIES
PRESSURE RELIEF DEVICE MPREC
STANDARD COVER - DIRECT / BOX

SERIAL NUMBER
-

MATERIAL NUMBER
10159110OM

SHEET
1 / 3

A3

© MASCHINENFABRIK REINHAUSEN GMBH 2020
THE REPRODUCTION, DISTRIBUTION AND UTILIZATION OF THIS DOCUMENT AS WELL AS THE COMMUNICATION OF ITS CONTENTS TO OTHERS WITHOUT EXPRESS AUTHORIZATION IS PROHIBITED. OFFENDERS WILL BE HELD LIABLE FOR THE PAYMENT OF DAMAGES. ALL RIGHTS RESERVED IN THE EVENT OF THE GRANT OF A PATENT, UTILITY MODEL OR DESIGN.

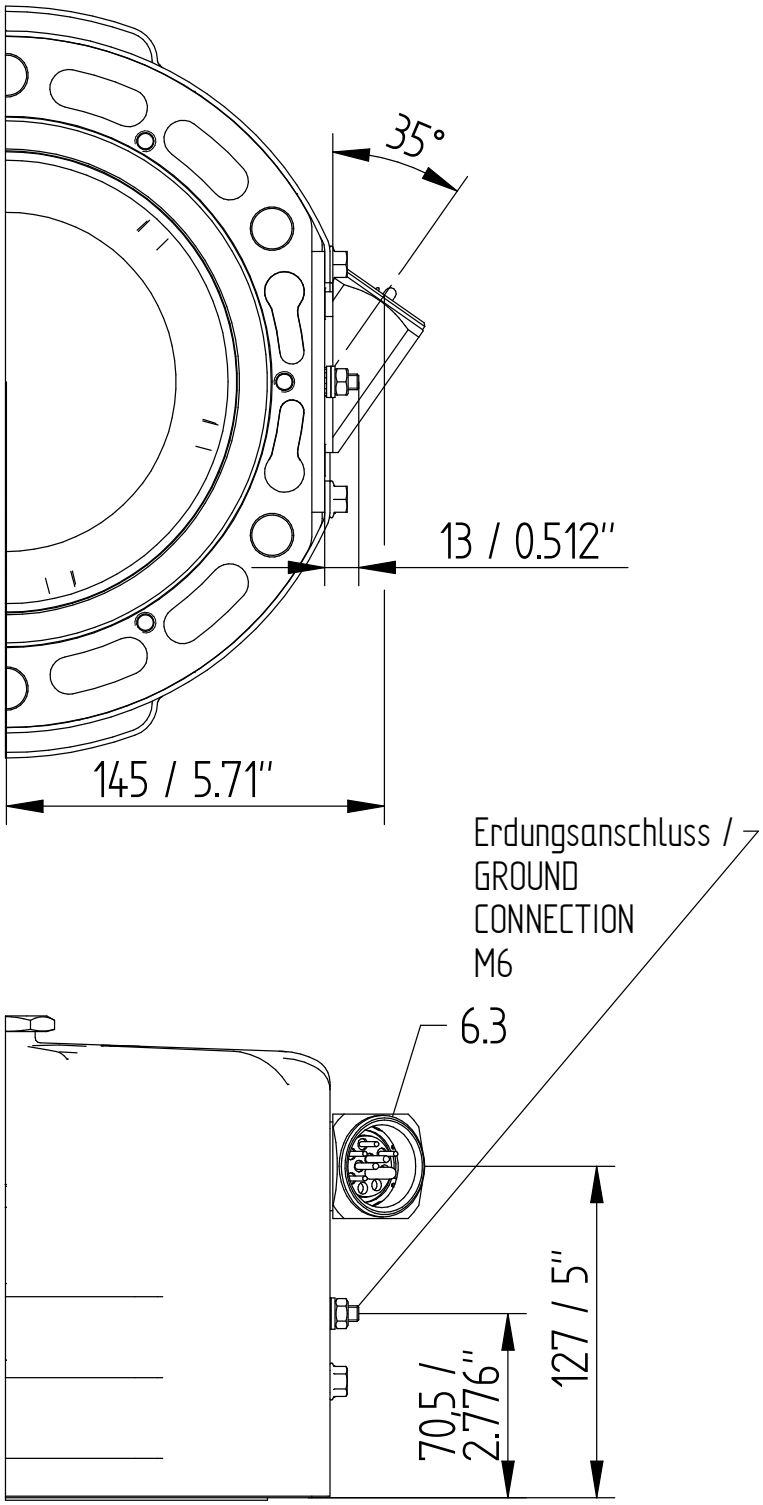

	DATE	NAME	DOCUMENT NO.
DFTR.	02.08.2023	THIELEK	SED 7266672 000 03
CHKD.	02.08.2023	SCHAEFERB	CHANGE NO. / SCALE
STAND.	02.08.2023	KLEYN	1123935 / 1:2

DIMENSION IN mm EXCEPT AS NOTED

TRANSFORMER ACCESSORIES
PRESSURE RELIEF DEVICE MPREC
STANDARD COVER – ANSI / WESTINGHOUSE

SERIAL NUMBER
–

MATERIAL NUMBER 101591100M

SHEET 2 / 3

A3

	DATE	NAME	DOCUMENT NO.	
DFTR.	02.08.2023	THIELEK	SED 7266672 000 03	
CHKD.	02.08.2023	SCHAEFERB	CHANGE NO.	SCALE
STAND.	02.08.2023	KLEYN	1123935	1:2

© MASCHINENFABRIK REINHAUSEN GMBH 2020
THE REPRODUCTION, DISTRIBUTION AND UTILIZATION OF THIS DOCUMENT AS WELL AS THE COMMUNICATION OF ITS CONTENTS TO OTHERS WITHOUT EXPRESS AUTHORIZATION IS PROHIBITED. OFFENDERS WILL BE HELD LIABLE FOR THE PAYMENT OF DAMAGES. ALL RIGHTS RESERVED IN THE EVENT OF THE GRANT OF A PATENT, UTILITY MODEL OR DESIGN.

DIMENSION IN mm EXCEPT AS NOTED

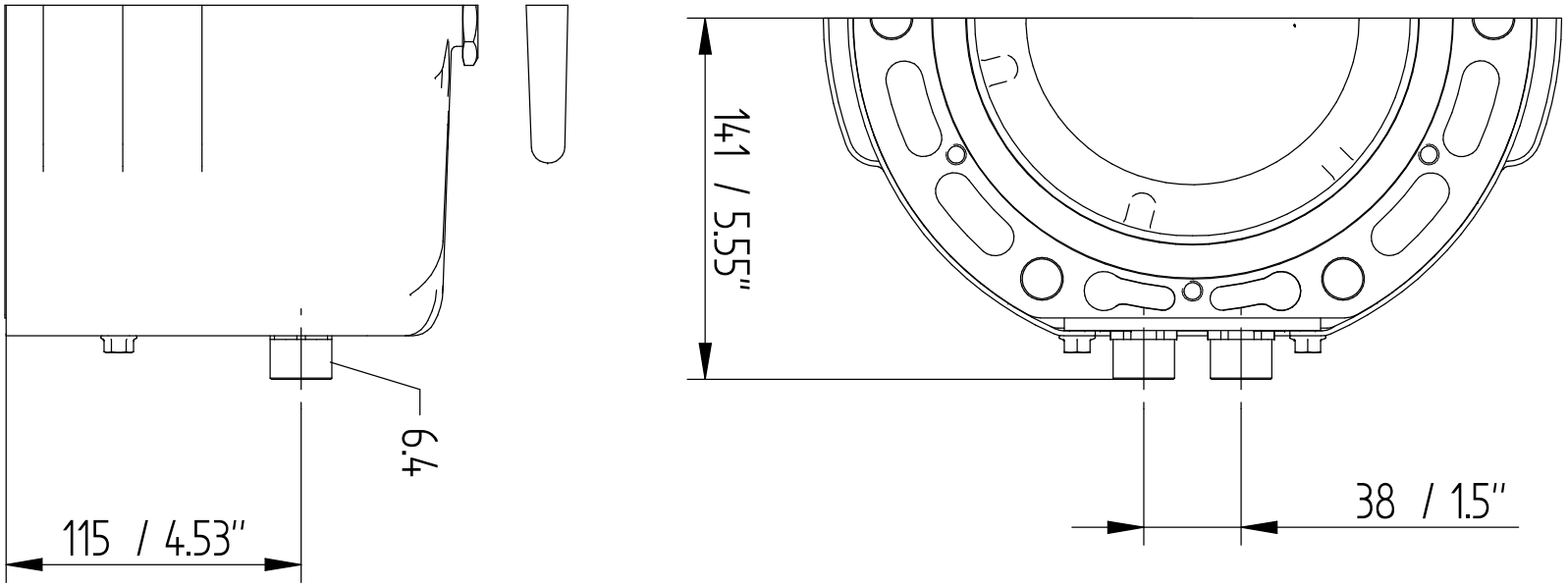

TRANSFORMER ACCESSORIES
PRESSURE RELIEF DEVICE MPREC
STANDARD COVER - 1/2" NPT - ADAPTER

SERIAL NUMBER
-

MATERIAL NUMBER
10159110OM

SHEET
3 / 3

A3

© MASCHINENFABRIK REINHAUSEN GMBH 2020
THE REPRODUCTION, DISTRIBUTION AND UTILIZATION OF THIS DOCUMENT AS WELL AS THE COMMUNICATION OF ITS CONTENTS TO OTHERS WITHOUT EXPRESS AUTHORIZATION IS PROHIBITED. OFFENDERS WILL BE HELD LIABLE FOR THE PAYMENT OF DAMAGES. ALL RIGHTS RESERVED IN THE EVENT OF THE GRANT OF A PATENT, UTILITY MODEL OR DESIGN.

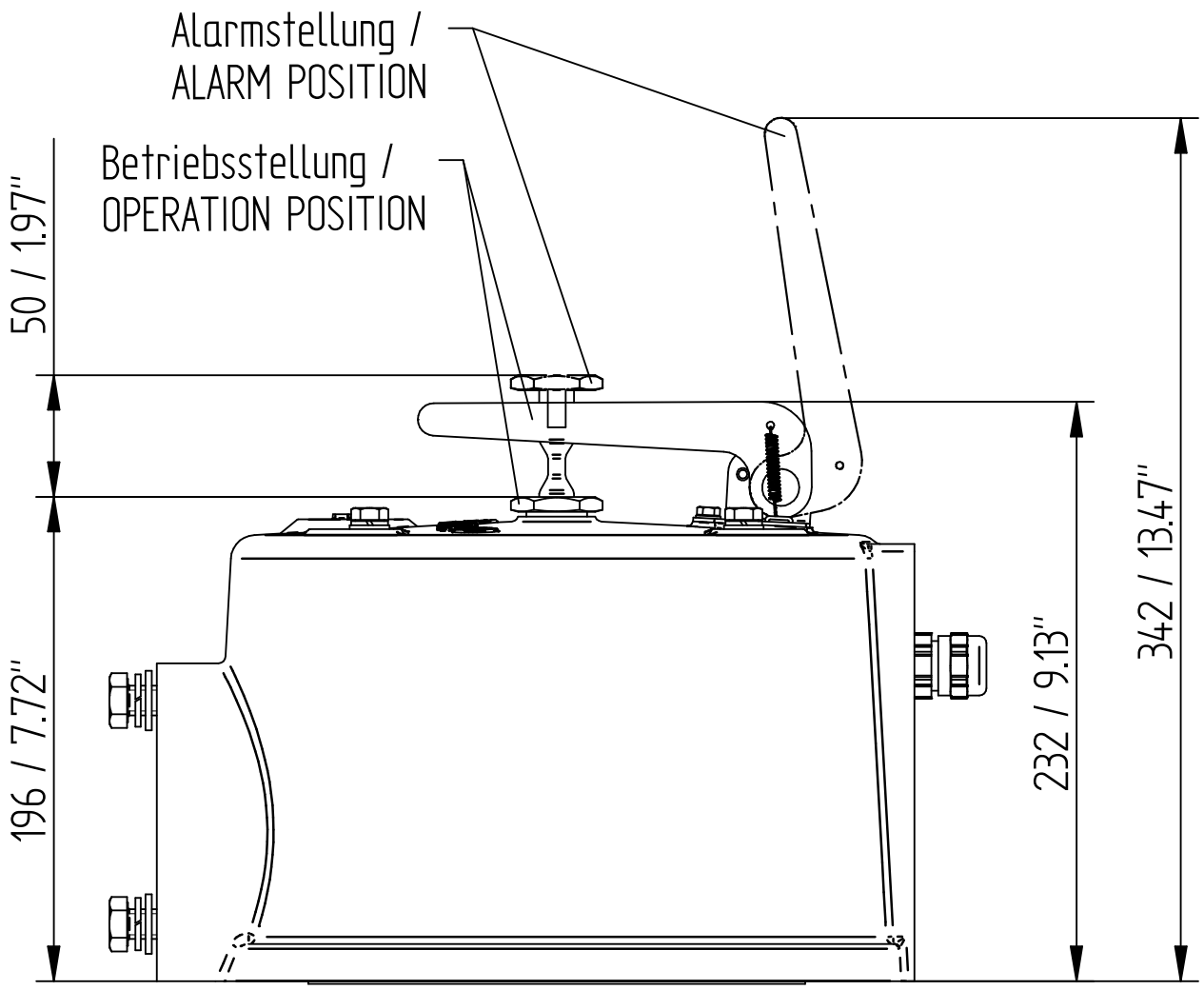

	DATE	NAME	DOCUMENT NO.
DFTR.	31.07.2023	THIELEK	SED 72674429 000 01
CHKD.	01.08.2023	SCHAEFERB	CHANGE NO. / SCALE
STAND.	02.08.2023	KLEYN	1123935 / 1:2

DIMENSION IN mm EXCEPT AS NOTED

MR

TRANSFORMER ACCESSORIES
PRESSURE RELIEF DEVICE MPREC
OD (OIL DIRECTED) COVER

SERIAL NUMBER
-

MATERIAL NUMBER
101784200M

SHEET
1 / 2

A3

© MASCHINENFABRIK REINHAUSEN GMBH 2020
THE REPRODUCTION, DISTRIBUTION AND UTILIZATION OF THIS DOCUMENT AS WELL AS THE COMMUNICATION OF ITS CONTENTS TO OTHERS WITHOUT EXPRESS AUTHORIZATION IS PROHIBITED. OFFENDERS WILL BE HELD LIABLE FOR THE PAYMENT OF DAMAGES. ALL RIGHTS RESERVED IN THE EVENT OF THE GRANT OF A PATENT, UTILITY MODEL OR DESIGN.

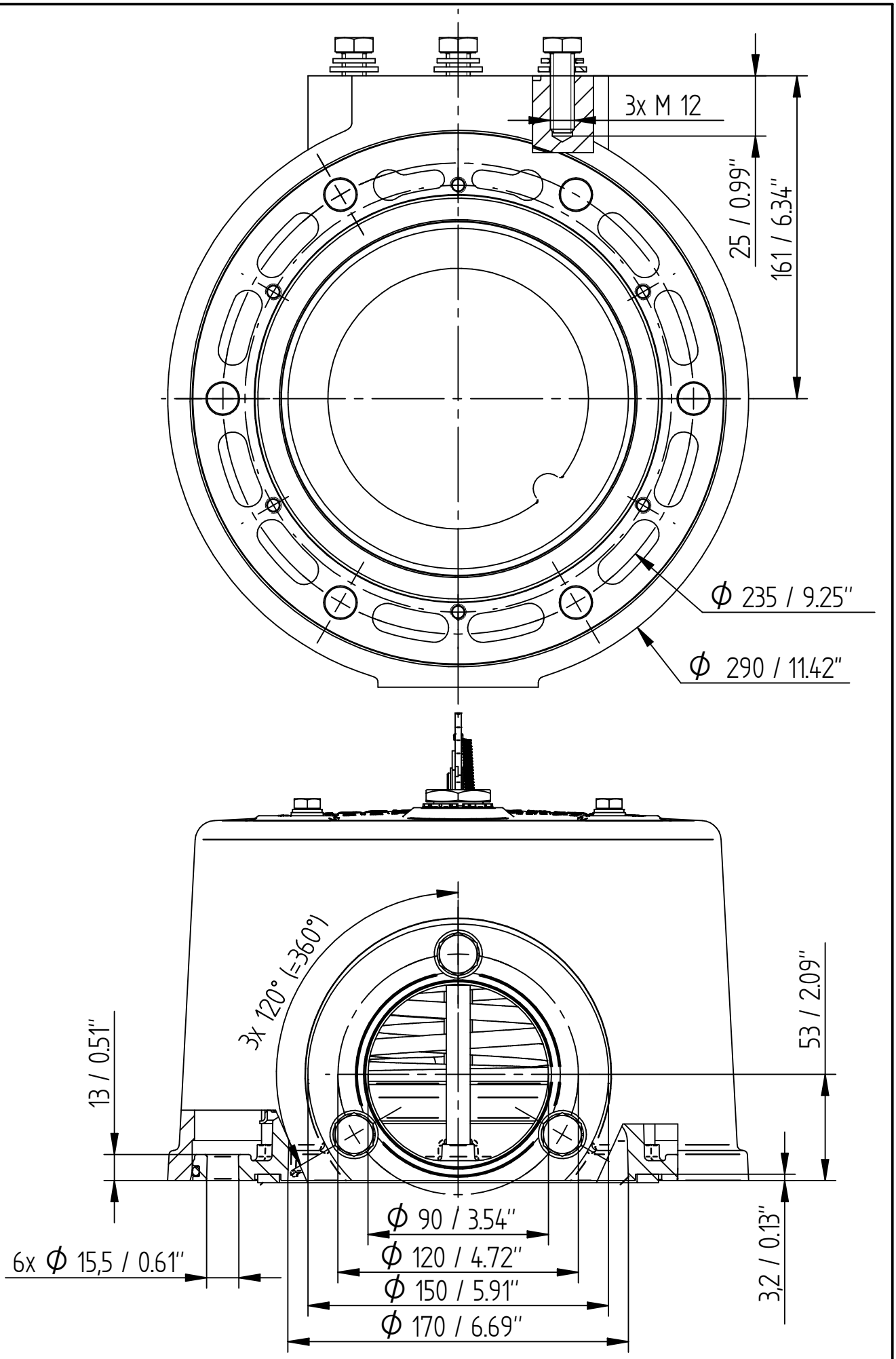

	DATE	NAME	DOCUMENT NO.	
DFTR.	31.07.2023	THIELEK	SED 7267429 000 01	
CHKD.	01.08.2023	SCHAEFERB	CHANGE NO.	SCALE
STAND.	02.08.2023	KLEYN	1123935	1:2

DIMENSION IN mm EXCEPT AS NOTED

MR

TRANSFORMER ACCESSORIES
PRESSURE RELIEF DEVICE MPREC
OD (OIL DIRECTED) COVER

SERIAL NUMBER
-

MATERIAL NUMBER
101784200M

SHEET
2/ 2

A4

	DATE	NAME	DOCUMENT NO.	
DFTR.	02.08.2023	THIELEK	SED 7266974 000 03	
CHKD.	02.08.2023	SCHAEFERB	CHANGE NO.	SCALE
STAND.	02.08.2023	KLEYN	1123935	1:2

© MASCHINENFABRIK REINHAUSEN GMBH 2020
THE REPRODUCTION, DISTRIBUTION AND UTILIZATION OF THIS DOCUMENT AS WELL AS THE COMMUNICATION OF ITS CONTENTS TO OTHERS WITHOUT EXPRESS AUTHORIZATION IS PROHIBITED. OFFENDERS WILL BE HELD LIABLE FOR THE PAYMENT OF DAMAGES. ALL RIGHTS RESERVED IN THE EVENT OF THE GRANT OF A PATENT, UTILITY MODEL OR DESIGN.

DIMENSION IN mm EXCEPT AS NOTED

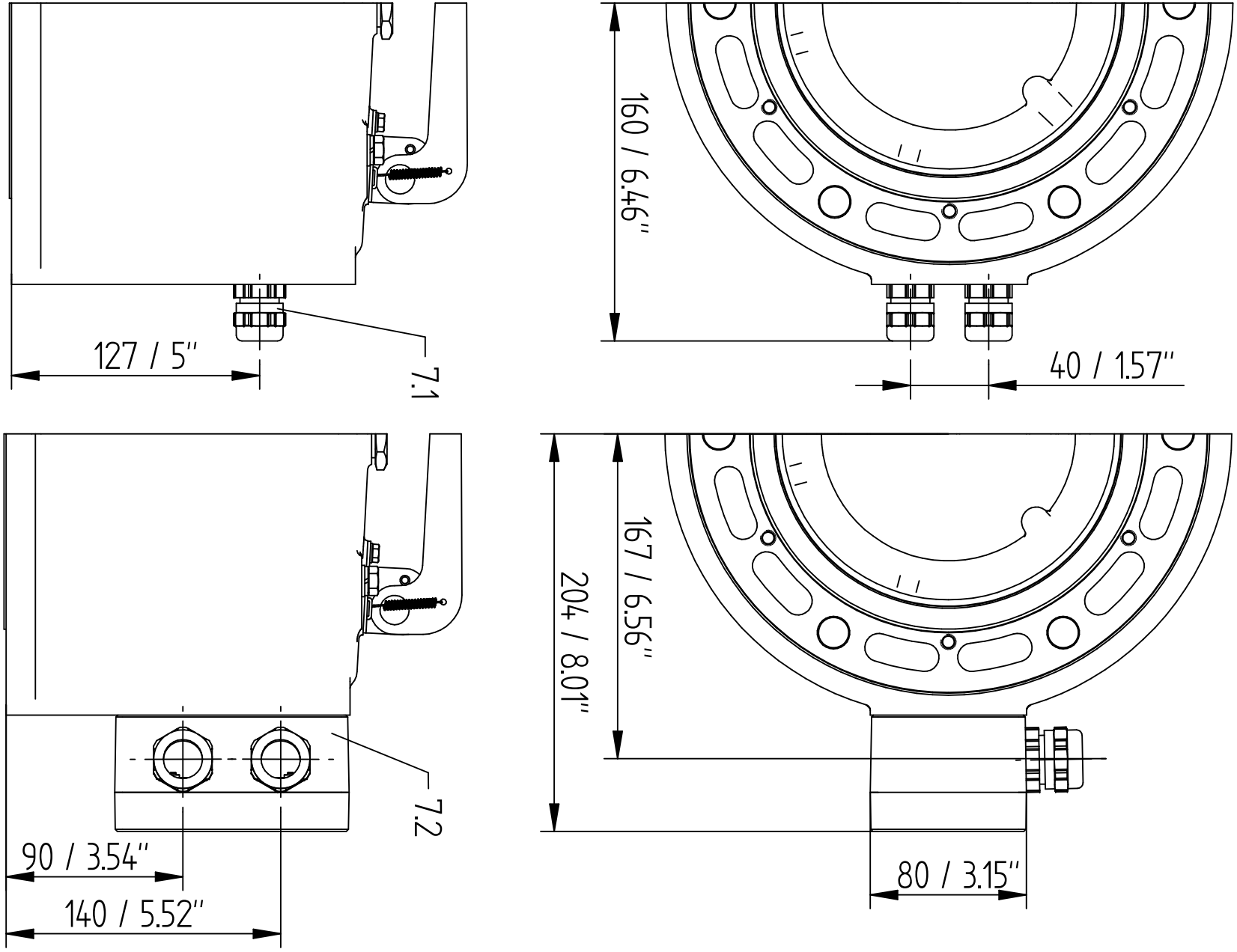

TRANSFORMER ACCESSORIES
PRESSURE RELIEF DEVICE MPREC
OD (OIL DIRECTED) COVER – DIRECT / BOX

SERIAL NUMBER
–

MATERIAL NUMBER
10159111OM

SHEET
1 / 3

A3

© MASCHINENFABRIK REINHAUSEN GMBH 2020
THE REPRODUCTION, DISTRIBUTION AND UTILIZATION OF THIS DOCUMENT AS WELL AS THE COMMUNICATION OF ITS CONTENTS TO OTHERS WITHOUT EXPRESS AUTHORIZATION IS PROHIBITED. OFFENDERS WILL BE HELD LIABLE FOR THE PAYMENT OF DAMAGES. ALL RIGHTS RESERVED IN THE EVENT OF THE GRANT OF A PATENT, UTILITY MODEL OR DESIGN.

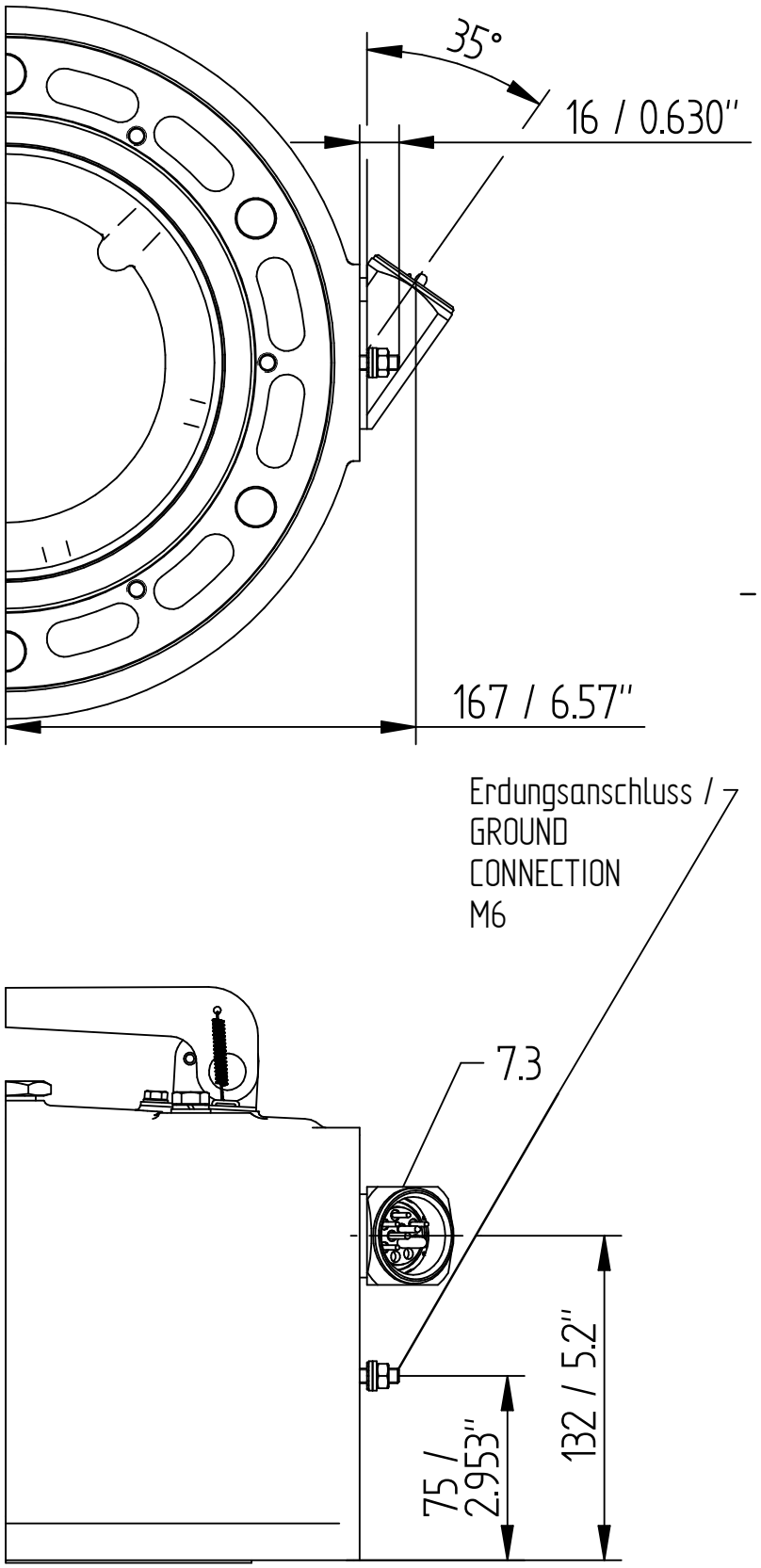

	DATE	NAME	DOCUMENT NO.
DFTR.	02.08.2023	THIELEK	SED 7266974 000 03
CHKD.	02.08.2023	SCHAEFERB	CHANGE NO. / SCALE
STAND.	02.08.2023	KLEYN	1123935 / 1:2

DIMENSION IN mm EXCEPT AS NOTED

MR

TRANSFORMER ACCESSORIES
PRESSURE RELIEF DEVICE MPREC
OD (OIL DIRECTED) COVER – ANSI / WESTINGHOUSE

SERIAL NUMBER
–

MATERIAL NUMBER
101591110M

SHEET
2 / 3

A3

© MASCHINENFABRIK REINHAUSEN GMBH 2020
THE REPRODUCTION, DISTRIBUTION AND UTILIZATION OF THIS DOCUMENT AS WELL AS THE COMMUNICATION OF ITS CONTENTS TO OTHERS WITHOUT EXPRESS AUTHORIZATION IS PROHIBITED. OFFENDERS WILL BE HELD LIABLE FOR THE PAYMENT OF DAMAGES. ALL RIGHTS RESERVED IN THE EVENT OF THE GRANT OF A PATENT, UTILITY MODEL OR DESIGN.

	DATE	NAME	DOCUMENT NO.
DFTR.	02.08.2023	THIELEK	SED 7266974 000 03
CHKD.	02.08.2023	SCHAEFERB	CHANGE NO. / SCALE
STAND.	02.08.2023	KLEYN	1123935 / 1:2

DIMENSION IN mm EXCEPT AS NOTED

MR

TRANSFORMER ACCESSORIES
PRESSURE RELIEF DEVICE MPREC
OD (OIL DIRECTED) COVER – 1/2" NPT – ADAPTER

SERIAL NUMBER
–

MATERIAL NUMBER 101591110M

SHEET 3 / 3

A3

	Datum	Name	Dokumentnummer	
Gez.	14.07.2022	THIELEK	SED 8235729 000 00	
Gepr.	14.07.2022	STOPPEL	Änderungsnummer	Maßstab
Norm.	14.07.2022	KLEYN	1116515	1:2

MASCHINENFABRIK REINHAUSEN GMBH COPYRIGHT RESERVED
THE REPRODUCTION, DISTRIBUTION AND UTILIZATION OF THIS DOCUMENT AS WELL AS THE COMMUNICATION OF ITS CONTENTS TO OTHERS WITHOUT EXPRESS AUTHORIZATION IS PROHIBITED. OFFENDERS WILL BE HELD LIABLE FOR THE PAYMENT OF DAMAGES. ALL RIGHTS RESERVED IN THE EVENT OF THE GRANT OF A PATENT, UTILITY MODEL OR DESIGN.

Maßangaben in mm, soweit nicht anders angegeben

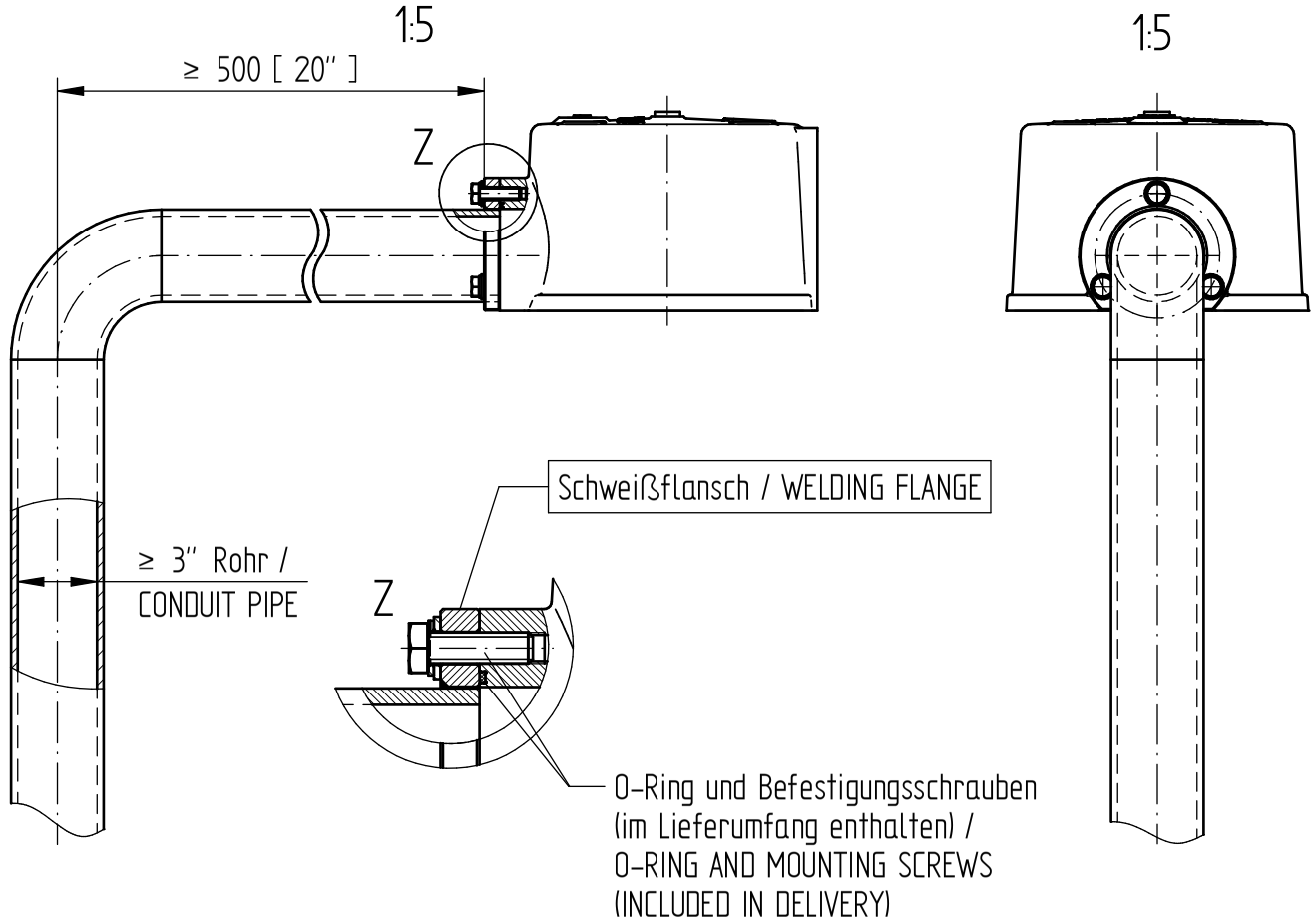

TRANSFORMER ACCESSORIES
MPREC Ableitrohr/DRAINAGE PIPE
Maßzeichnung/DIMENSION DRAWING

Materialnummer
1017161000M

Serialnummer
-

Blatt
1 / 3

	Datum	Name	Dokumentnummer	
Gez.	14.07.2022	THIELEK	SED 8235729 000 00	
Gepr.	14.07.2022	STOPPEL	Änderungsnummer	Maßstab
Norm.	14.07.2022	KLEYN	1116515	1:2

MASCHINENFABRIK REINHAUSEN GMBH COPYRIGHT RESERVED
THE REPRODUCTION, DISTRIBUTION AND UTILIZATION OF THIS DOCUMENT AS WELL AS THE COMMUNICATION OF ITS CONTENTS TO OTHERS WITHOUT EXPRESS AUTHORIZATION IS PROHIBITED. OFFENDERS WILL BE HELD LIABLE FOR THE PAYMENT OF DAMAGES. ALL RIGHTS RESERVED IN THE EVENT OF THE GRANT OF A PATENT, UTILITY MODEL OR DESIGN.

Maßangaben in mm, soweit nicht anders angegeben

Schweißflansch Bestell-Nr. / WELDING FLANGE ORDER NO.: 74045001
Werkstoff / MATERIAL: X5CrNi18-10 (1.4301, AISI 304)

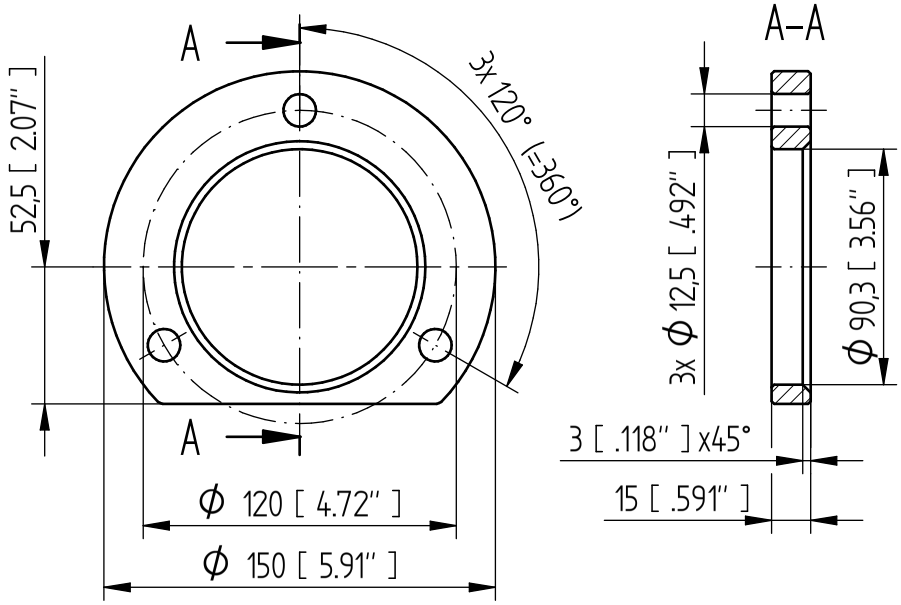

TRANSFORMER ACCESSORIES
MPREC Ableitrohr/DRAINAGE PIPE
Maßzeichnung/DIMENSION DRAWING

Materialnummer: 101716100M
Seriatnummer: -
Blatt: 2/3

	Datum	Name	Dokumentnummer	
Gez.	14.07.2022	THIELEK	SED 8235729 000 00	
Gepr.	14.07.2022	STOPPEL	Änderungsnummer	Maßstab
Norm.	14.07.2022	KLEYN	1116515	1:2

MASCHINENFABRIK REINHAUSEN GMBH COPYRIGHT RESERVED
THE REPRODUCTION, DISTRIBUTION AND UTILIZATION OF THIS DOCUMENT AS WELL AS THE COMMUNICATION OF ITS CONTENTS TO OTHERS WITHOUT EXPRESS AUTHORIZATION IS PROHIBITED. OFFENDERS WILL BE HELD LIABLE FOR THE PAYMENT OF DAMAGES. ALL RIGHTS RESERVED IN THE EVENT OF THE GRANT OF A PATENT, UTILITY MODEL OR DESIGN.

Maßangaben in mm, soweit nicht anders angegeben

Gewindeflansch Bestell-Nr. / FLANGE INTERNAL THREAD ORDER NO. 73647901
Werkstoff / MATERIAL X5CrNi18-10 (1.4301, AISI 304)

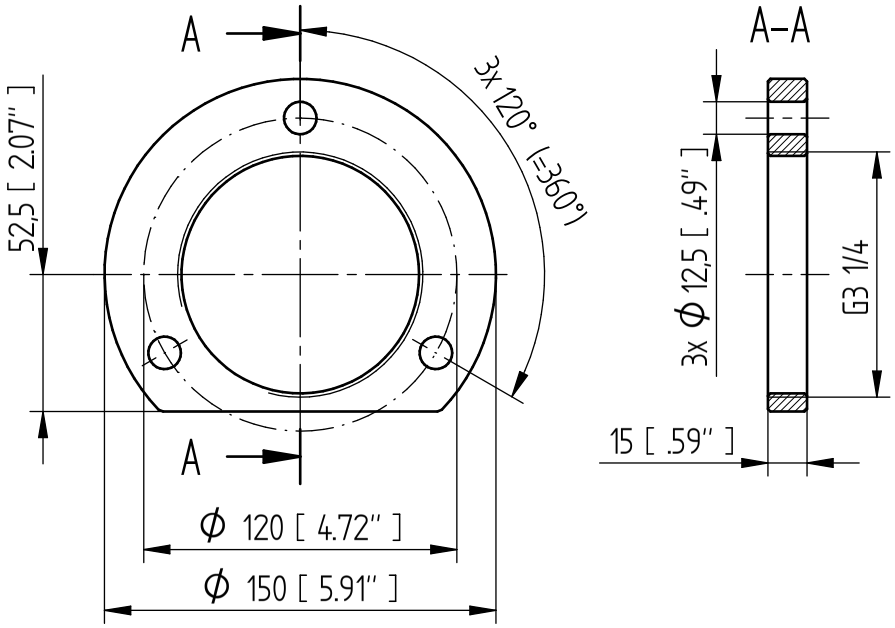

TRANSFORMER ACCESSORIES
MPREC Ableitrohr/DRAINAGE PIPE
Maßzeichnung/DIMENSION DRAWING

Materialnummer
101716100M

Seriatnummer
-

Blatt
3/3

Maschinenfabrik Reinhausen GmbH
Falkensteinstrasse 8
93059 Regensburg
Germany
+49 941 4090-0
info@reinhausen.com
reinhausen.com

Please note:
The data in our publications may differ from the data of the devices delivered.
We reserve the right to make changes without notice.
5785291/05 ZH - MESSKO® MPREC® 技术数据 -
10/23
MR 公司 2023

THE POWER BEHIND POWER.