www.reinhausen.com

On-load tap-changer VACUTAP® VV

Technical Data TD 203/05

	NOTE!
	The product may have been modified after this document went to press. We expressly reserve the right to make changes to the technical data, the design or the scope of delivery. In general, the information provided and the arrangements agreed during processing of the relevant offers and orders are binding.

Table of Contents

1 General

1.1 Summary of technical data

On-load tap-changer	VVIII 250 Y	VV III 250 D	VV III 400 Y	VV III 400D	VVIII 600 Y	VVIII 600 D	VV I 401[3]	VV I 401[3]
Number of poles and application	3 neutral point	3 at any position on the winding	3 neutral point	3 at any position on the winding	3 neutral point	3 at any position on the winding	1 at any position on the winding	
Max. rated through-current I_{um} (in A)	250		400		600		400	
Rated short-time withstand current (in kA)	6		6		6		6	
Rated short-circuit duration (in s)	3		3		3		3	
Rated peak withstand current (in kA)	15		15		15		15	
Max. rated step voltage U_i (in V)	2000		2000...1700[1]		2000...1000[1]		2000...1700[1]	
Step capacity (in kVA)	see diagram P_{St}-/I_u							
Rated frequency (in Hz)	50...60							
Operating positions	without change-over selector: max. 12, with change-over selector max. 23						with change-over selector	
Rated insulation level								
Highest voltage for equipment U_m (in kV)[2]	40 76	40 76 145[4]	40 76	40 76 145[4]	40 76	40 76 145[4]	76	145[4]
Rated lightning impulse withstand voltage (in kV, 1,2 I 50)	200 350	200 350 650	200 350	200 350 650	200 350	200 350 650	350	650
AC withstand voltage (in kV, 50 Hz, 1 min.)	70 140	70 140 275	70 140	70 140 275	70 140	70 140 275	140	275
Rated withstand voltages of internal insulation	see table 3							
Oil compartment	Pressure-proof up to 0.3 bar, continuous difference pressure (test pressure 0.6 bar), head and cover of the on-load tap-changer are vacuum-proof.							
Temperature range	The on-load tap-changer VACUTAP® VV can be operated in the rated load range with oil temperatures of -25 °C to +105 °C.							
Tap-change supervisory control	Optional for all types see 733452							
Pressure relief device MPREC	Optional for all types see 737780							

Table 1a

On-load tap-changer	VV III 40 kV		VV III 76 kV		VV III 145 V		VV I 76 kV		VV I 145 kV	
Weight without oil (approx. in kg)	240		255		280		200		215	
Displacement volume (in dm^3)	295		328		405		148		178	
Oil filling quantity V_S and min. volume ΔV[5]	V_S	ΔV	V_S	ΔV	V_S	ΔV	V_S	ΔV	V_S	ΔV
of the diverter switch oil compartment (in dm^3)	240	30	265	33	325	39	125	16	145	19
Oil suction pipe	optional				optional[6]		optional		optional[6]	

Table 1b

Notes for **table 1a** and **table 1b**:

[1] See also diagram U_i / I_u

[2] In acc. with VDE0111, part 1: r.m.s. value of the phase-phase voltage for which a piece of equipment is rated for its insulation.

[3] 600 A model on request

[4] A max. operating voltage of 132 kV + 15 % = 151.8 kV is amissible if the test voltages for the 145 kV series are not exceeded.

[5] Applies for oil temperature ϑ = -30 °C ... +100 °C

[6] Applies for column 145 kV: Oil suction pipe not to be used together with oil filter unit!

1.2 Specified minimum oil conservator height

The oil conservator height is determined by calculating the distance between the upper edge of the OLTC cover and the oil level in the oil conservator (see also appendix drawing 899759) .

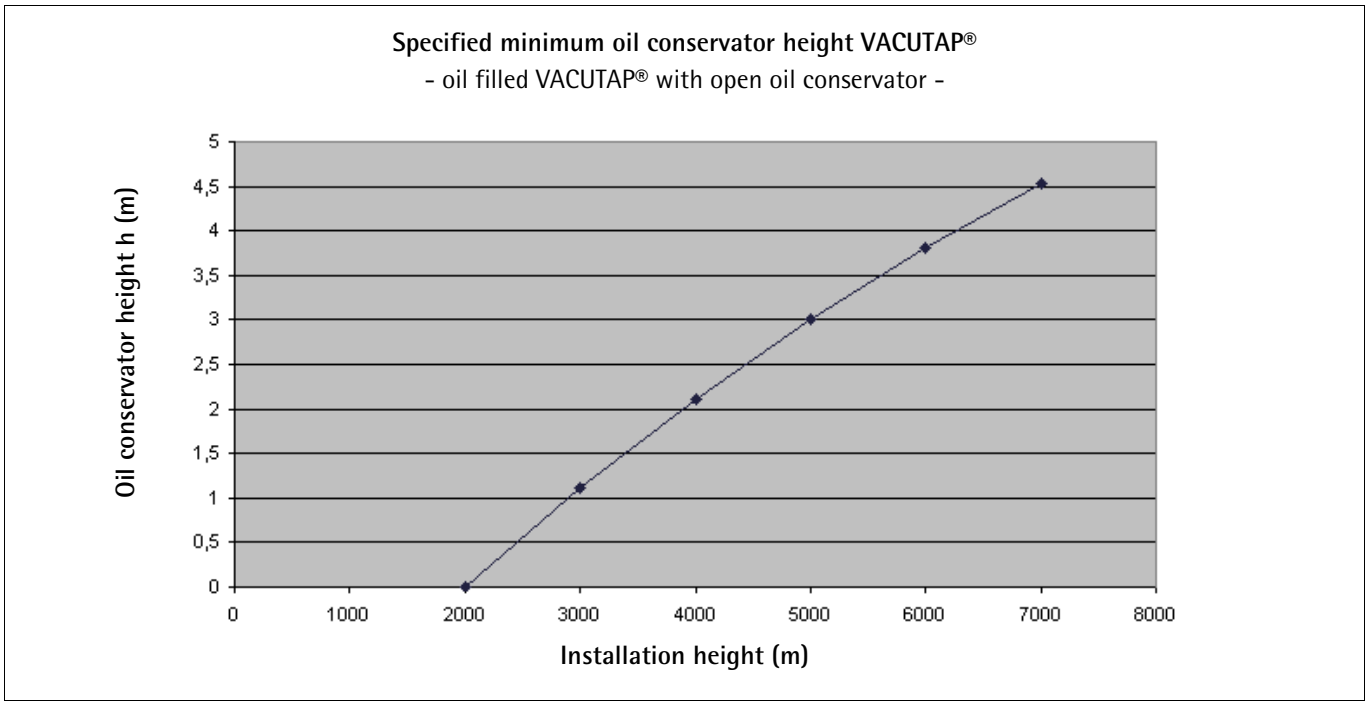

1.3 Survey

1.3.1 Survey of the designs (no. of poles, change-over selector, installation length, fig. 1, 899541)

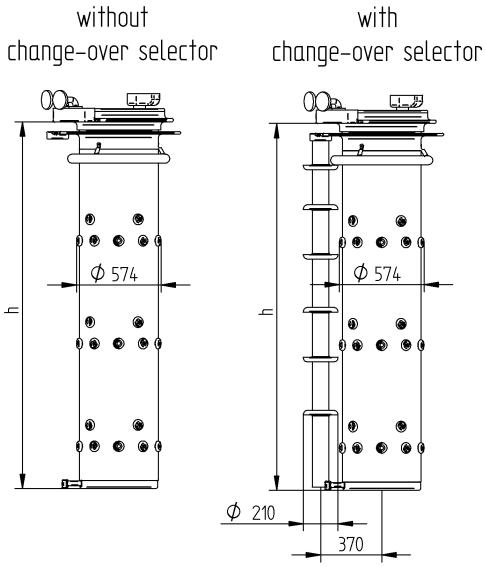

VV III 250/400/600 - D -
145 - 10/12 - O/W/G

installation length h in mm

U_m (kV)	without / with change-over selector
145	2224

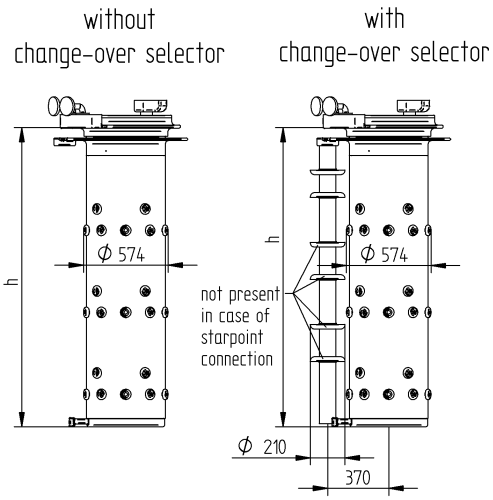

VV III 250/400/600 - Y/D -
40...76 - 10/12 - O/W/G

installation length h in mm

U_m (kV)	without / with change-over selector
40	1628
76	1810

VV I 401 - 76 - 10/12 - W/G

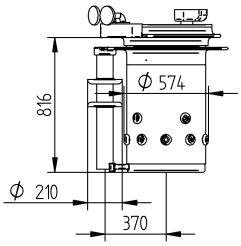

VV I 401 - 145 - 10/12 - W/G

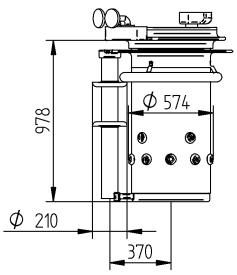

1

1.3.2 Survey of the basic connection diagrams (890616)

Survey of the basic connection diagrams (fig. 2a, 2b, 2c) with designation of the tap selector terminals in accordance with MR standards. This contact designation corresponds to the specifications in the on-load tap-changer dimension drawings.

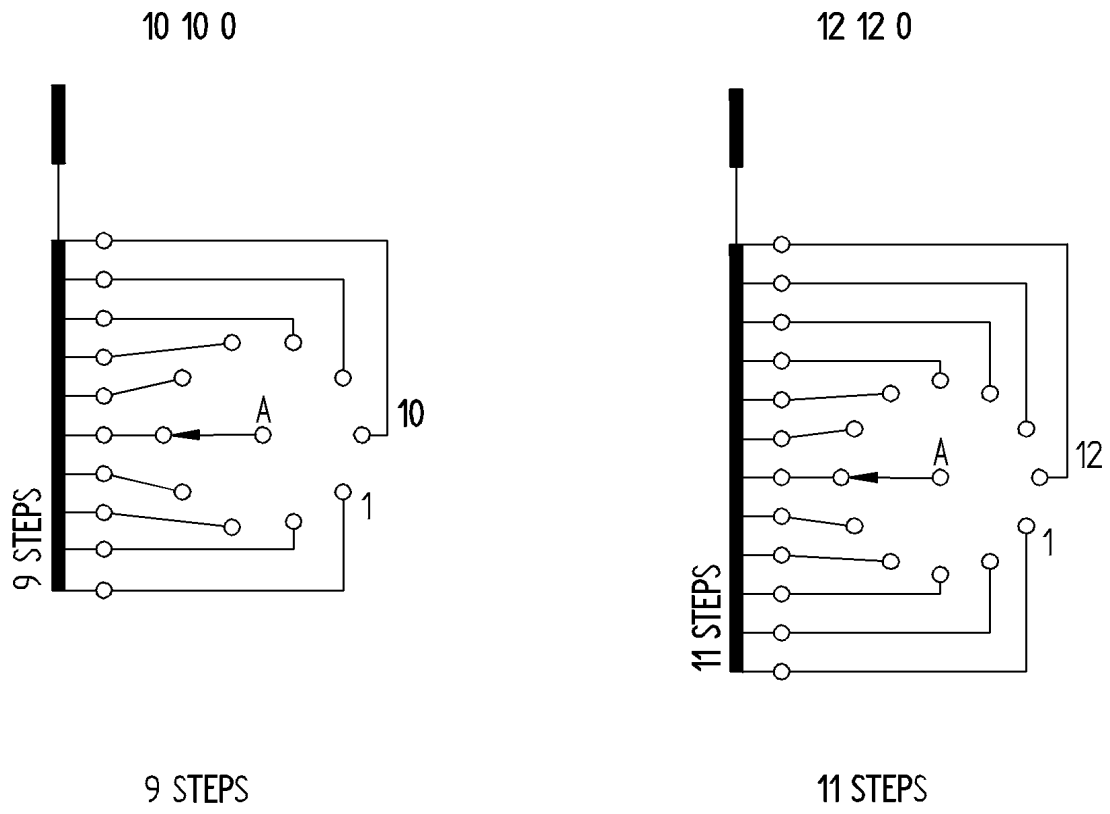

2a

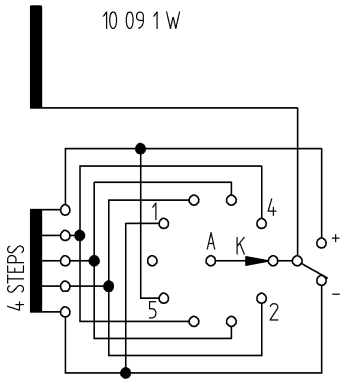

±4 STEPS

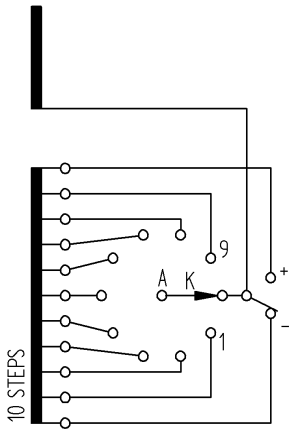

±9 STEPS

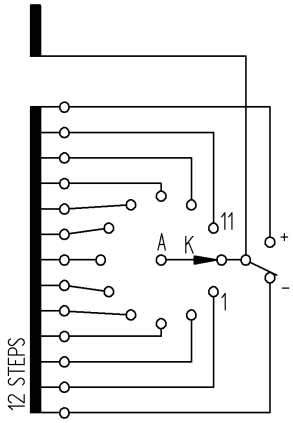

±11 STEPS

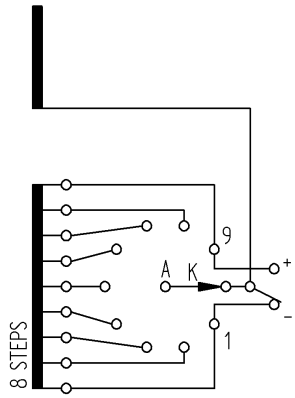

±8 STEPS

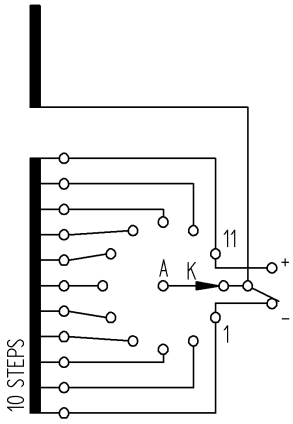

±10 STEPS

2b

10 09 1 G

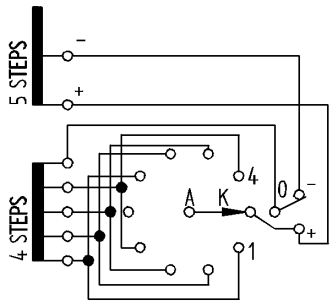

±4 STEPS

10 19 1 G

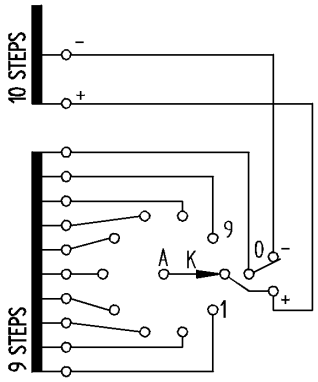

±9 STEPS

12 23 1 G

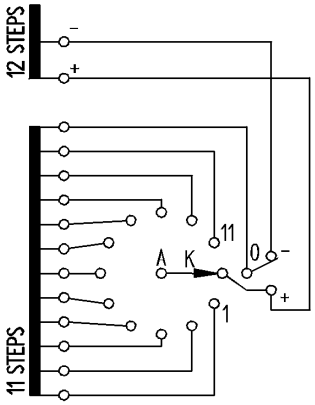

±11 STEPS

10 19 3 G

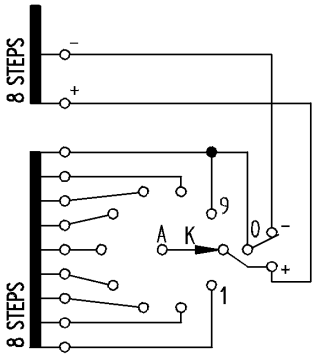

±8 STEPS

12 23 3 G

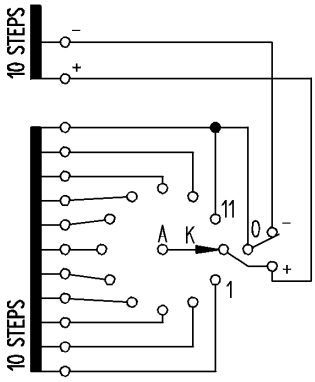

±10 STEPS

2c

1.3.3 On-load tap-changer VV III Y, basic connection diagram 10 10 0 (fig. 3, ZS030040)

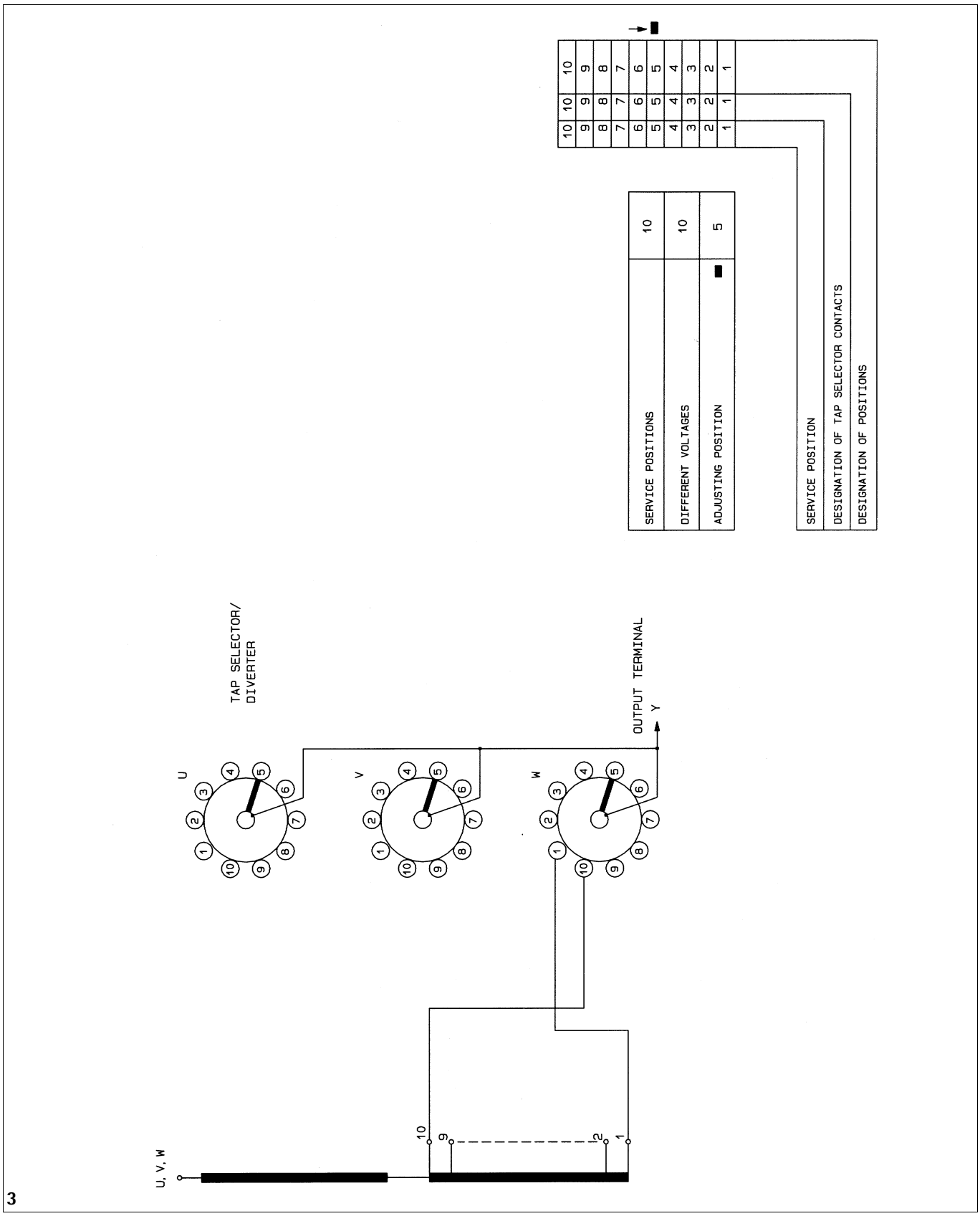

3

1.3.4 On-load tap-changer VV III Y, basic connection diagram 10 19 1 W (fig. 4, ZS030041)

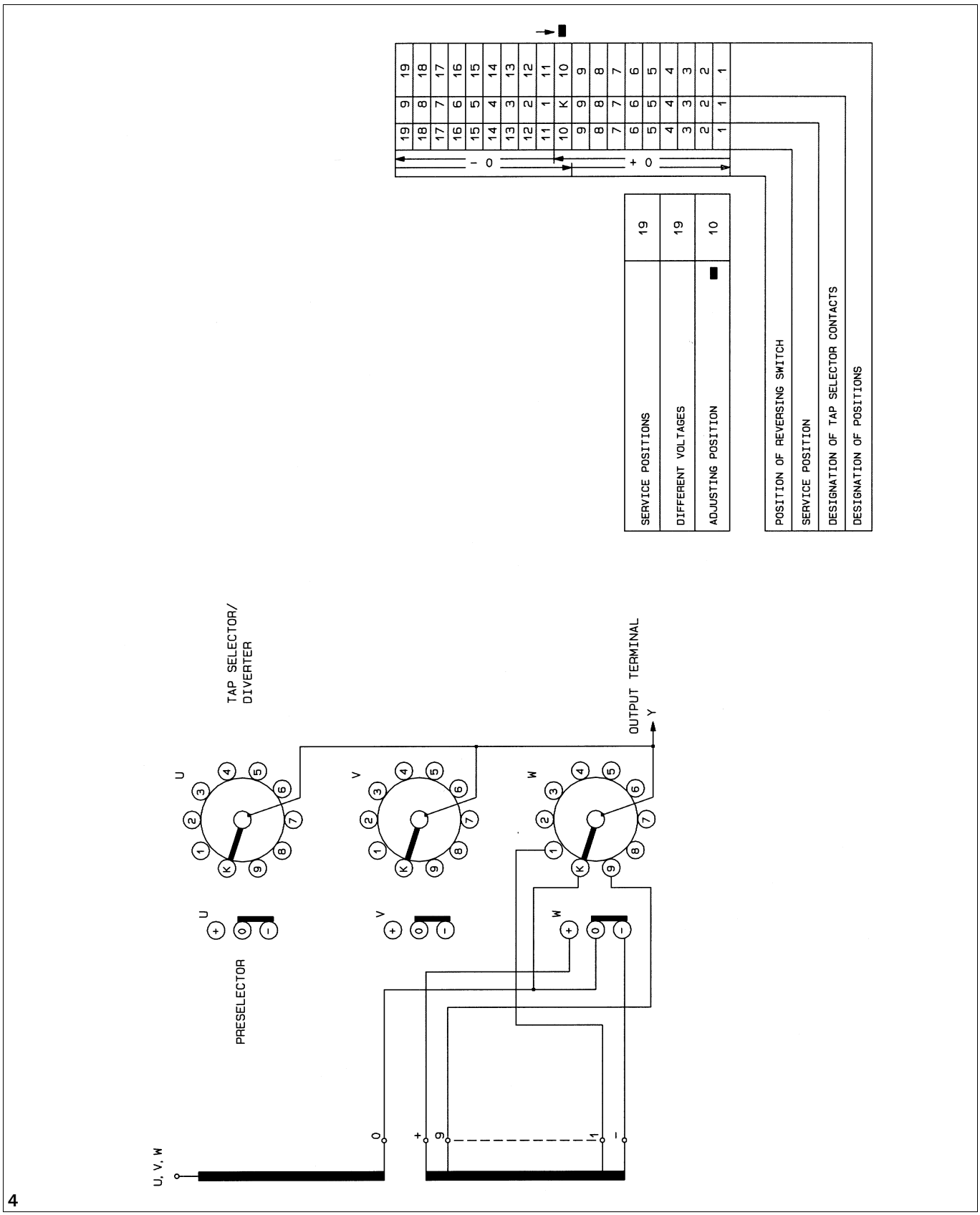

1.3.5 On-load tap-changer VV III Y, basic connection diagram 10 19 1 G (fig. 5, ZS030042)

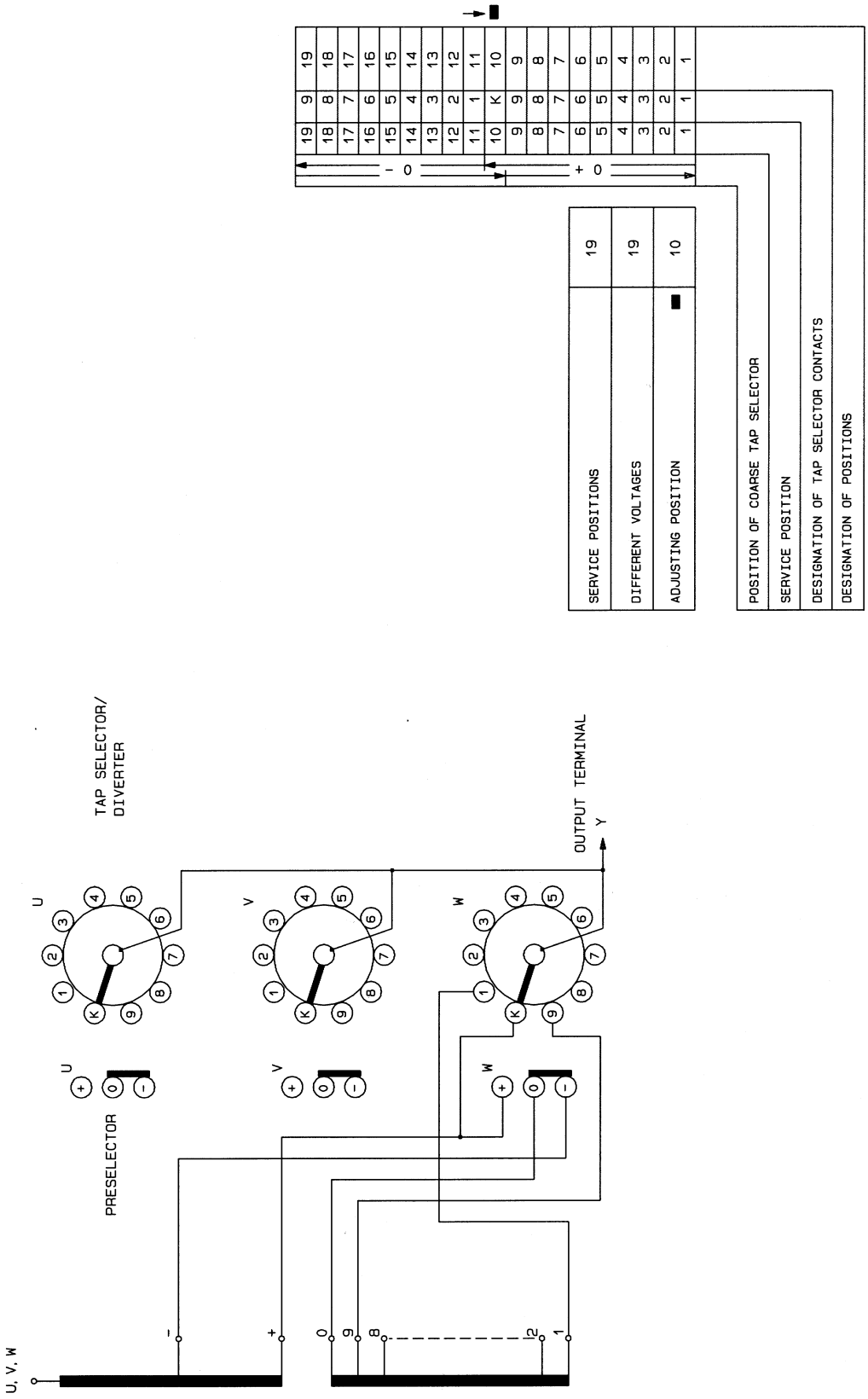

5

2 Technical Data

2.1 Rated through-current (I_u), rated step voltage (U_i) and step capacity (P_{St})

On-load tap-changer	VV III 250	VV III 400 / VV I 401	VV III 600
Contacts	10/12	10/12	10/12
I_U (in A)	250	400	600
U_i (in V)	2000	2000...1700[1)]	2000...1000[1)]
P_{St} (in kVA)	see diagram P_{St}/I_u		

Table 2 Rated through-currents (I_u), related rated step voltage (U_i) and step capacities (P_{St}), at highest and lowest rated step voltage of the step capacity curve (see **fig. 6**).

Note: [1)] See also diagram U_i-/I_u

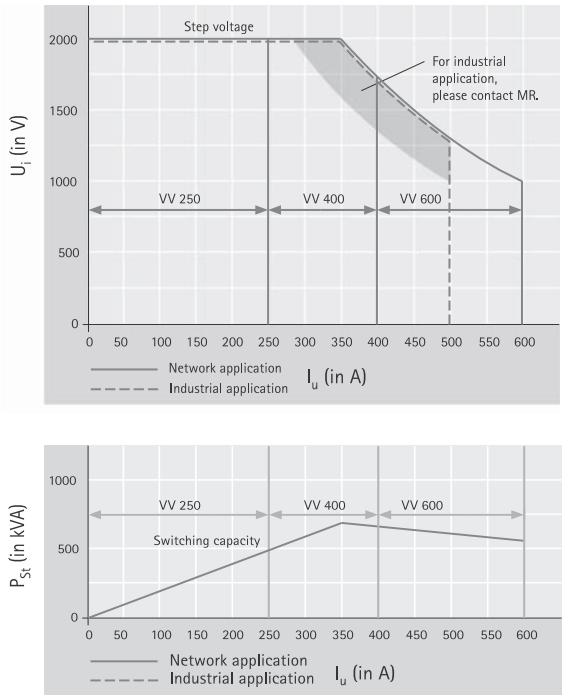

Fig. 6 Step capacities (I_u, U_i)

2.2 Life of the vacuum interrupters

The vacuum interrupters should be replaced as a precautionary measure after 600,000 tap-change operations.

2.3 Rated withstand voltages of the internal insulation

Insulation distances		Voltage shape and period	V V III xxx D			V V III xxx Y	V V I	
a	U_m = 40 kV	kV 1.2/50 µs	200			200	U_m = 76 kV	200
	U_m = 76 kV	kV 50Hz 1 min	50			50		50
	U_m = 145 kV	kV 1.2/50 µs	250				U_m = 145 kV	250
		kV 50Hz 1 min	65					65
a1	U_m = 40 kV	kV 1.2/50 µs	100			100	U_m = 76 kV	100
	U_m = 76 kV	kV 50Hz 1 min	20			20		20
	U_m = 145 kV	kV 1.2/50 µs	130				U_m = 145 kV	130
		kV 50Hz 1 min	30					30
b			b_1	b_2	b_3			
	U_m = 40 kV	kV 1.2/50 µs	200	250	300	200		
		kV 50Hz 1 min	70	80	90	85		
	U_m = 76 kV	kV 1.2/50 µs	350	490	520	200		
		kV 50Hz 1 min	140	165	180	85		
	U_m = 145 kV	kV 1.2/50 µs	650	730	800			
		kV 50Hz 1 min	275	285	300			
c1	U_m = 40 kV	kV 1.2/50 µs	400			400	U_m = 76 kV	400
	U_m = 76 kV	kV 50Hz 1 min	100			100		100
	U_m = 145 kV	kV 1.2/50 µs	500				U_m = 145 kV	500
		kV 50Hz 1 min	130					130
c2			$c2_1$		$c2_2$			
	U_m = 40 kV	kV 1.2/50 µs	250		300	350		
		kV 50Hz 1 min	80		90	140		
	U_m = 76 kV	kV 1.2/50 µs	490		520	350		
		kV 50Hz 1 min	165		180	140		
	U_m = 145 kV	kV 1.2/50 µs	730		800			
		kV 50Hz 1 min	285		300			
f			f_1		f_2			f1 f2
	U_m = 40 kV	kV 1.2/50 µs	200		250	200		
		kV 50Hz 1 min	70		80	70		
	U_m = 76 kV	kV 1.2/50 µs	350		490	350	U_m = 76 kV	350 490
		kV 50Hz 1 min	140		165	140		140 165
	U_m = 145 kV	kV 1.2/50 µs	650		730		U_m = 145 kV	650 730
		kV 50Hz 1 min	275		285			275 285

Table 3 Rated withstand voltage (in kV) of the insulation distances (rated lightning impulse withstand voltage), AC withstand voltage) on the on-load tap-changer.

Without change-over selector

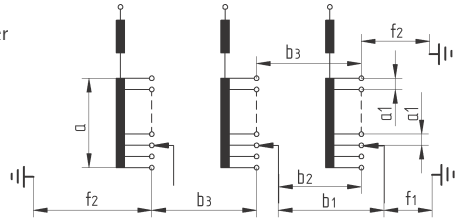

With reversing switch (+) - position

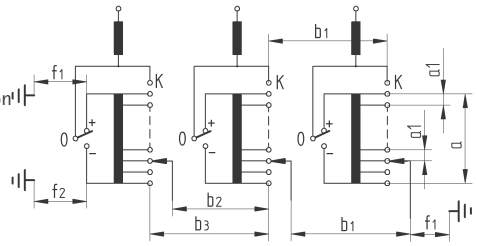

With reversing switch (–) - position

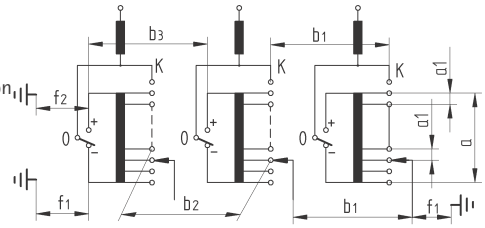

With coarse tap selector (+) - position

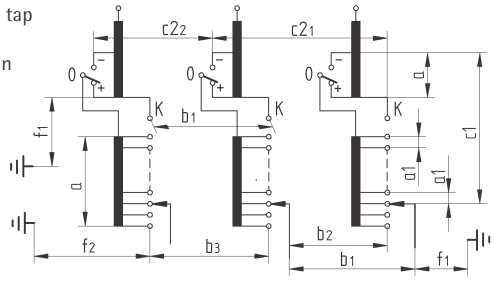

With coarse tap selector (–) - position

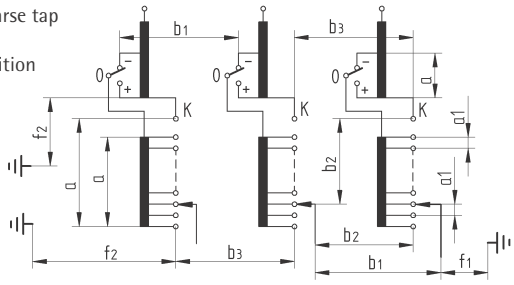

a1 = Between tap selector contacts of the winding of one step position (connected or not).

a = Between beginning and end of a tapped winding and, with coarse tap winding, between beginning and end of a coarse tap winding. Note for coarse tapping arrangement in (-) -position of the change-over selector:
When stressed with impulse voltage, the permissible withstand voltage "a" must be adhered to between the end of a coarse tap winding connected with the K tap selector contact and the tap selector contact at the end of the tapped winding of the same phase.

b = Between the tap selector contacts of different phases and between change-over selector contacts of different phases, which are connected with the beginning/end of a tapped winding or with a tap selector contact.
The permissible voltages between the contacts for tap-changers for delta connection vary with the positions of the change-over selector and the tap selector. This is the reason the different permissible withstand voltages (b_1, b_2 or b_3) must be adhered to for an insulation distance.

b_1 = Between selected contacts of different phases.
b_2 = From the selected contact of one phase to the unselected contacts of other phases.
b_3 = Between unselected contacts of different phases.

f = Between tap selector contacts and (+) -change-over selector contacts to ground.
Different values apply to designs with delta connection:
f_1 = Between terminal and ground and in the (+) - position of the change-over selector, between (+) -change-over selector contacts and ground.
f_2 = Between unselected tap selector contacts and in the (-) -position of the change-over selector, between (+) - contacts and ground.

Additional for coarse tapping arrangement in (+) - position of the change-over selector:

c1 = From one (-) - change-over selector contact to terminal of the same phase.

c2 = Between (-) -change-over selector contacts of different phases and a (-) - change-over selector contact to a (+) - change-over selector contact of another phase.
Different permissible values apply to tap-changers with delta connection:
$c2_1$ = Between a (-) -change-over selector contact and a (+) - change-over selector contact of another phase.
$c2_2$ = Between (-) change-over selector contacts of different phases.

Fig. 7

Specific dielectric stress of the tap winding

3 Appendix

3.1 On-load tap-changer VACUTAP® VV - classification (737774)

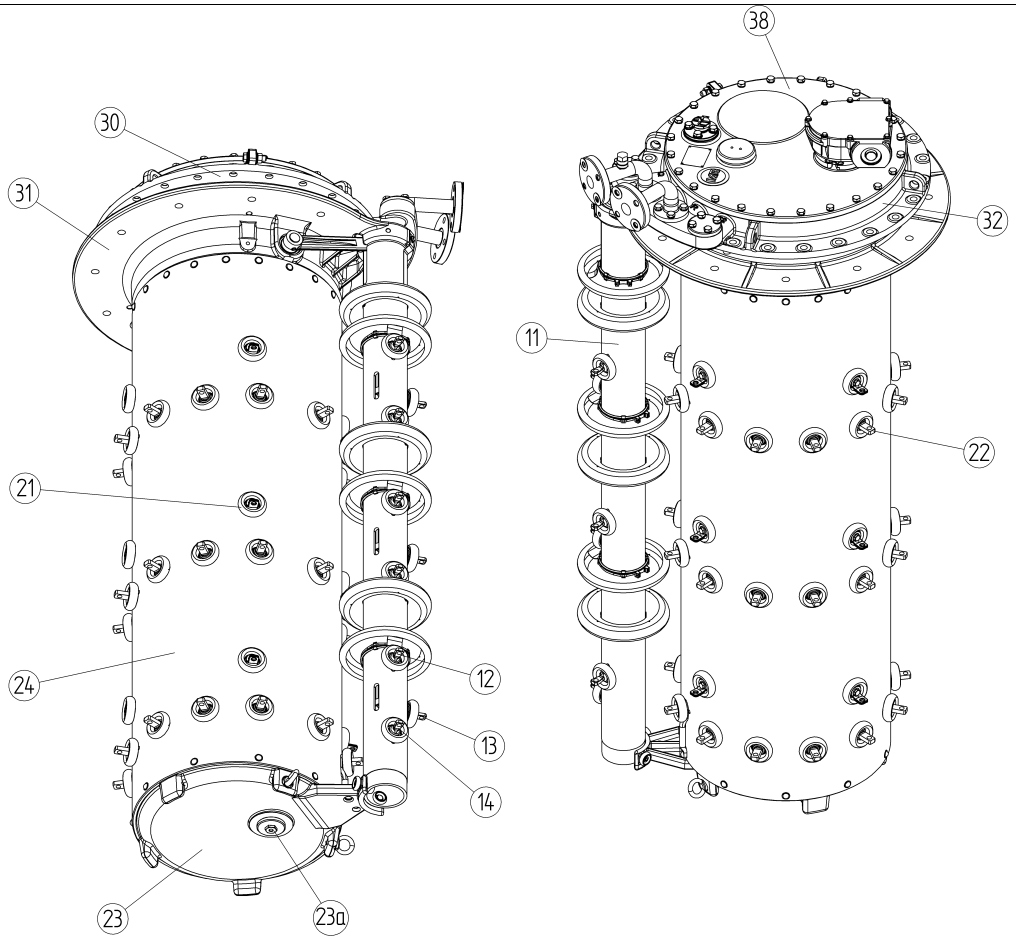

11 = Change-over selector pipe

12 = Change-over selector terminal "+"

13 = Change-over selector terminal "0"

14 = Change-over selector terminal "-"

21 = Take-off terminal

22 = Fine tap selector terminal

23 = Oil compartment bottom with kerosene drain plug 23a

24 = Tap changer oil compartment

30 = Tap changer head complete with 31 und 32 , refer to 898 863 : and 737 060 :

31 = Tap changer head - bottom part

32 = Tap changer head - top part

38 = Tap changer head cover

3.2 On-load tap-changer VACUTAP® VV III 250/400/600-Y/D-40...76-10/12-0 (899120)

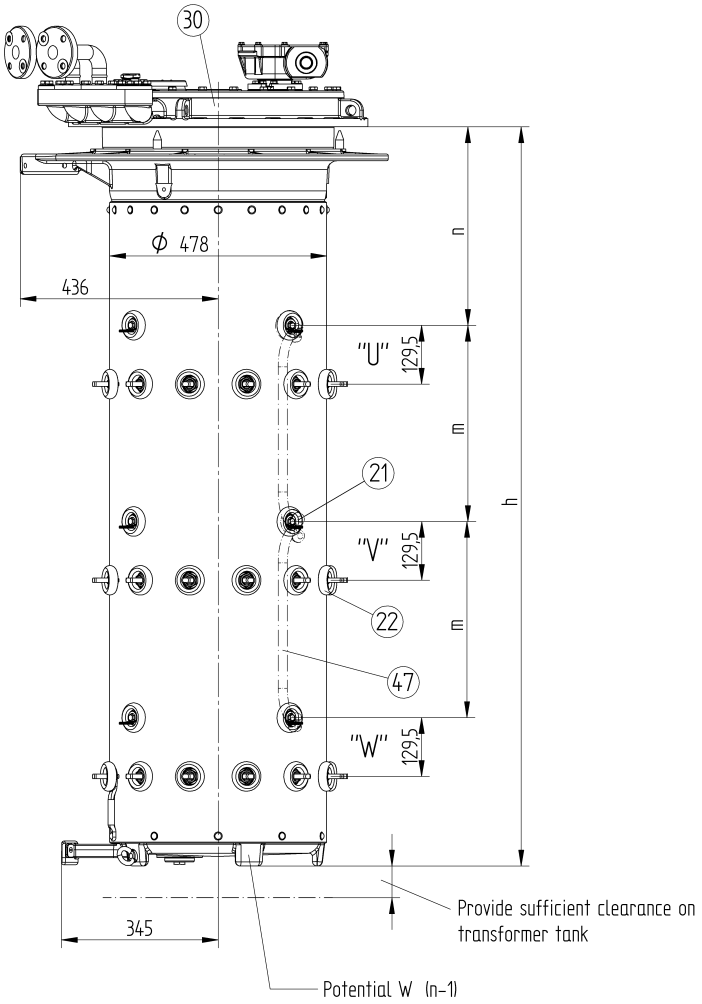

21 = Take-off terminal
22 = Fine tap selector terminal
Dimensions refer to 737 776 :

30 = Tap changer head , dimensions refer to 898 863 : and 737 060 :

47 V V - Y only : Neutral point connection lead , dimensions refer to 738 806 :

U_m [kV]		40	76
Dimensions [mm]	m	432	497
	n	437	489
	h	1628	1810

⚠ The connecting diagram is binding for the designation of the terminals and phases

3.3 On-load tap-changer VACUTAP® VV III 250/400/600-Y/D-40...76-10/12-W/G (899119)

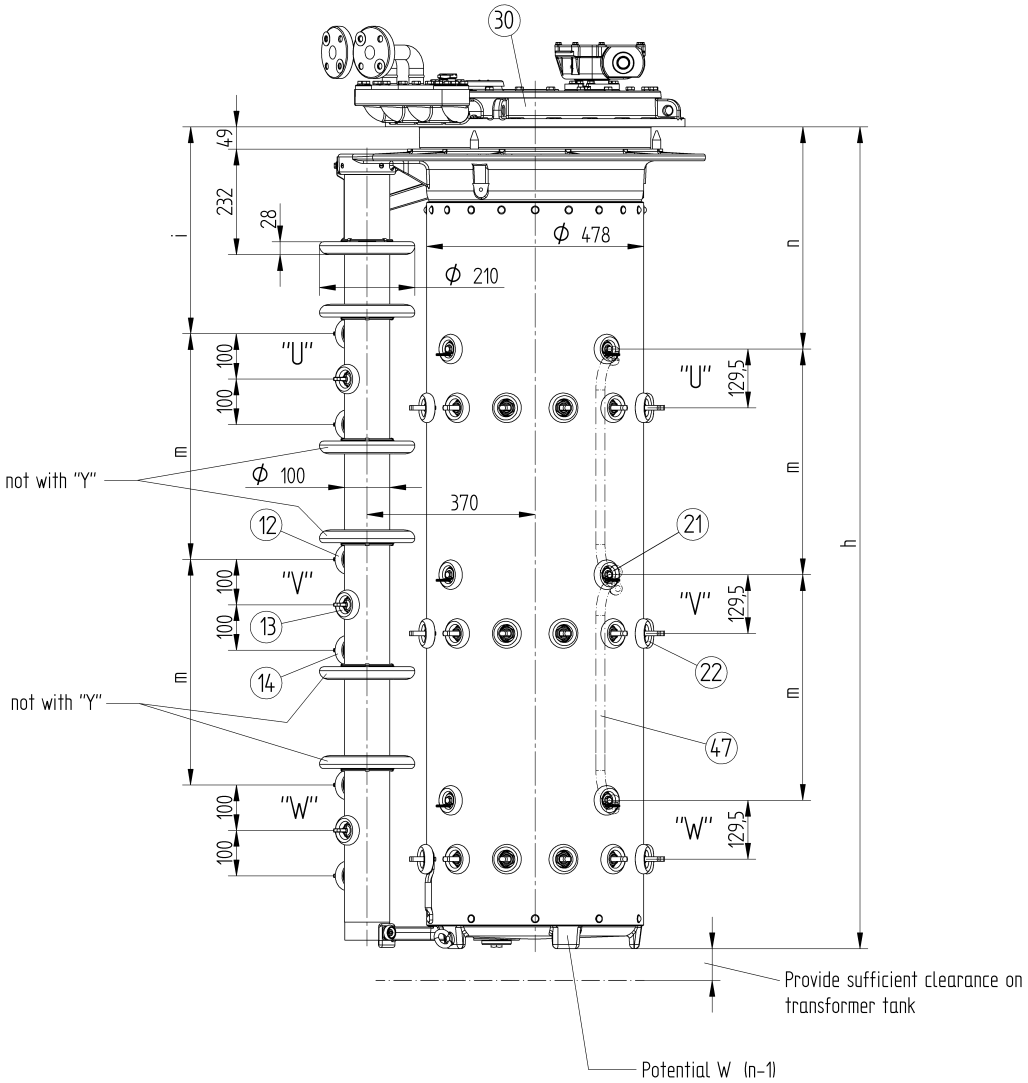

12 = Change-over selector terminal "+"
13 = Change-over selector terminal "0"
14 = Change-over selector terminal "–"
21 = Take-off terminal
22 = Fine tap selector terminal

Dimensions refer to 737 775 :

U_m [kV]		40	76
Dimensions [mm]	i	404	456
	m	432	497
	n	437	489
	h	1628	1810

30 = Tap changer head , dimensions refer to 898 863 : and 737 060 :

47 V V – Y only : Neutral point connection lead , dimensions refer to 738 806 :

⚠ The connecting diagram is binding for the designation of the terminals and phases

3.4 On-load tap-changer VACUTAP® VV III 250/400/600-D-145-10/12-0 (899163)

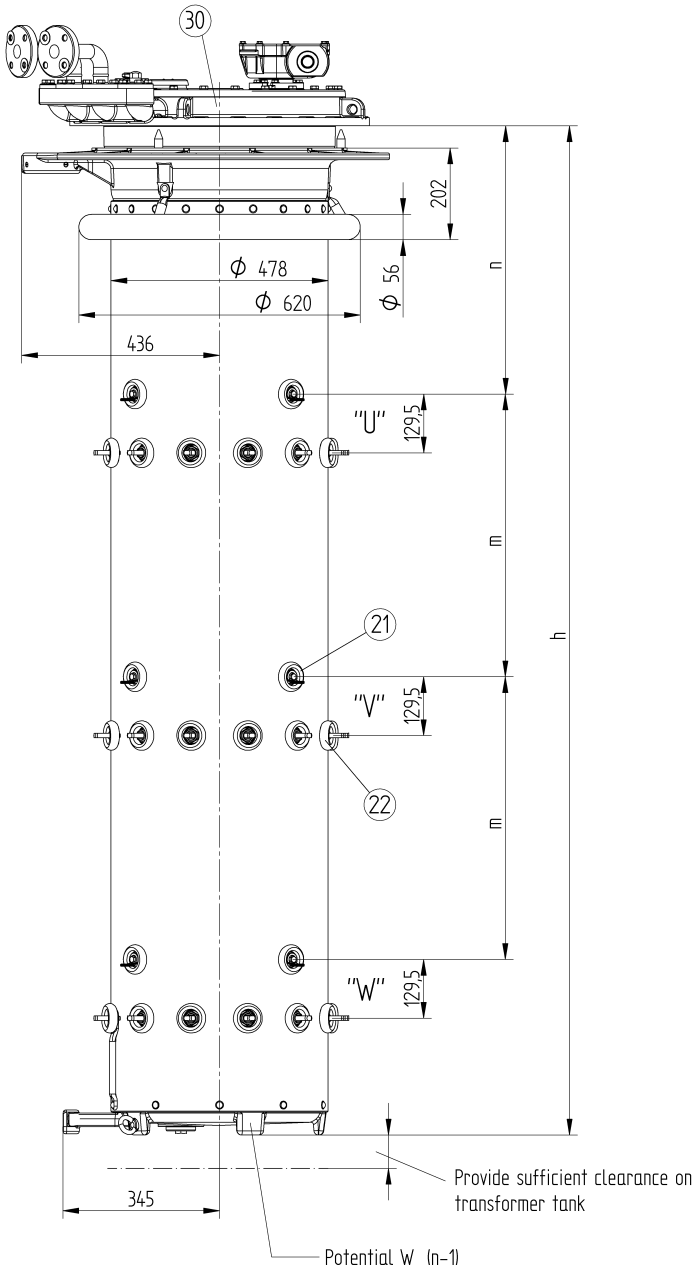

21 = Take-off terminal
22 = Fine tap selector terminal
Dimensions refer to 737 776 :

30 = Tap changer head , dimensions refer to 898 863 : and 737 060 :

U_m [kV]		145
Dimensions [mm]	m	623
	n	591
	h	2224

⚠ The connecting diagram is binding for the designation of the terminals and phases

3.5 On-load tap-changer VACUTAP® VV III 250/400/600-D-145-10/12-W/G (899162)

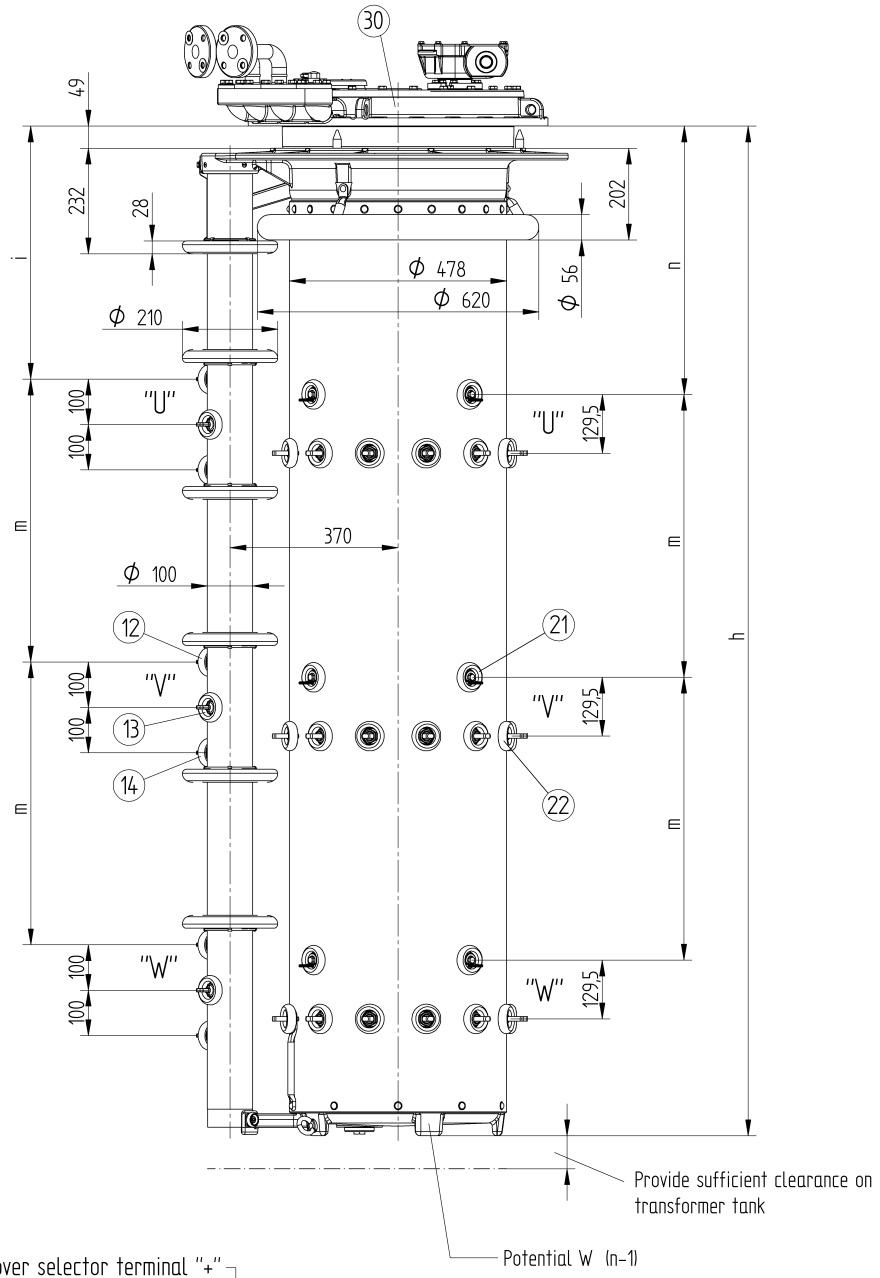

(12) = Change-over selector terminal "+"
(13) = Change-over selector terminal "0"
(14) = Change-over selector terminal "-"
(21) = Take-off terminal
(22) = Fine tap selector terminal
(30) = Tap changer head , dimensions refer to 898 863 : and 737 060 :

Dimensions refer to 737 775 :

U_m [kV]		145
Dimensions [mm]	i	558
	m	623
	n	591
	h	2224

⚠ The connecting diagram is binding for the designation of the terminals and phases

3.6 On-load tap-changer VACUTAP® VV I 401–76–10/12-W/G (899121)

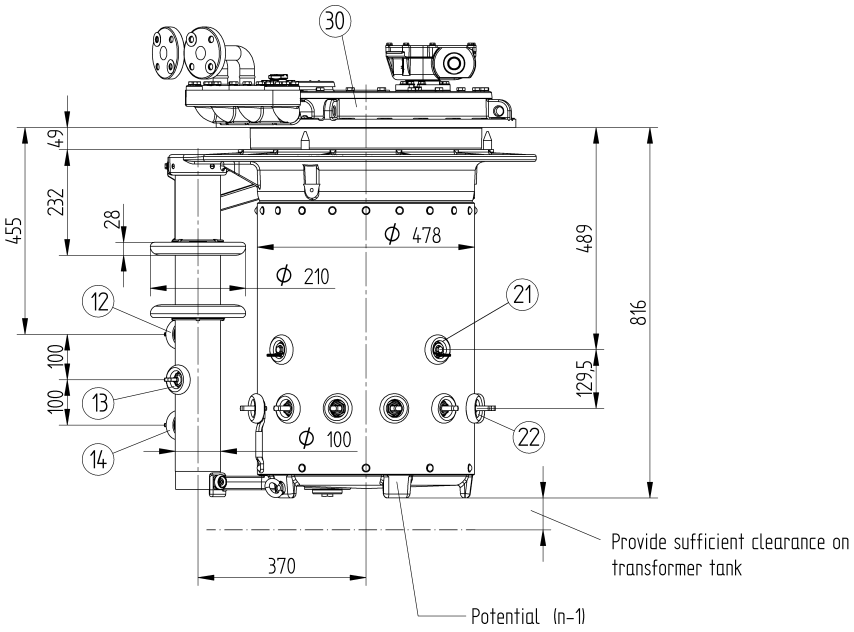

12 = Change-over selector terminal "+"
13 = Change-over selector terminal "0"
14 = Change-over selector terminal "-"
21 = Take-off terminal
22 = Fine tap selector terminal

Dimensions refer to 737 775 :

30 = Tap changer head , dimensions refer to 898 863 : and 737 060 :

⚠ The connecting diagram is binding for the designation of the terminals and phases

3.7 On-load tap-changer VACUTAP® VV I 401-145-10/12-W/G (727986)

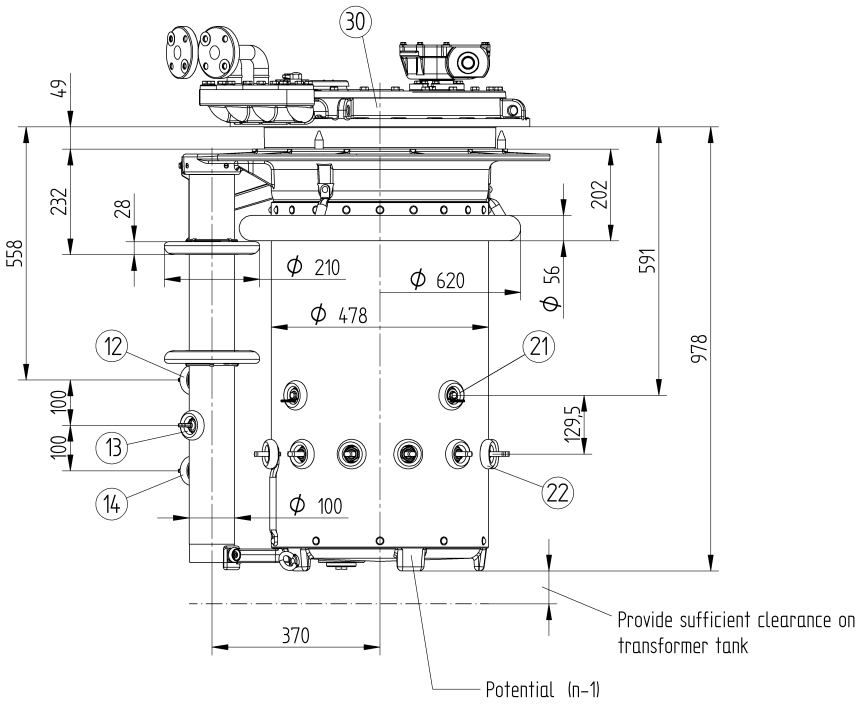

12 = Change-over selector terminal "+"
13 = Change-over selector terminal "0"
14 = Change-over selector terminal "-"
21 = Take-off terminal
22 = Fine tap selector terminal

Dimensions refer to 737 775 :

30 = Tap changer head , dimensions refer to 898 863 : and 737 060 :

⚠ The connecting diagram is binding for the designation of the terminals and phases

3.8 On-load tap-changer VACUTAP® VV, terminal dimensions - with change-over selector (737775)

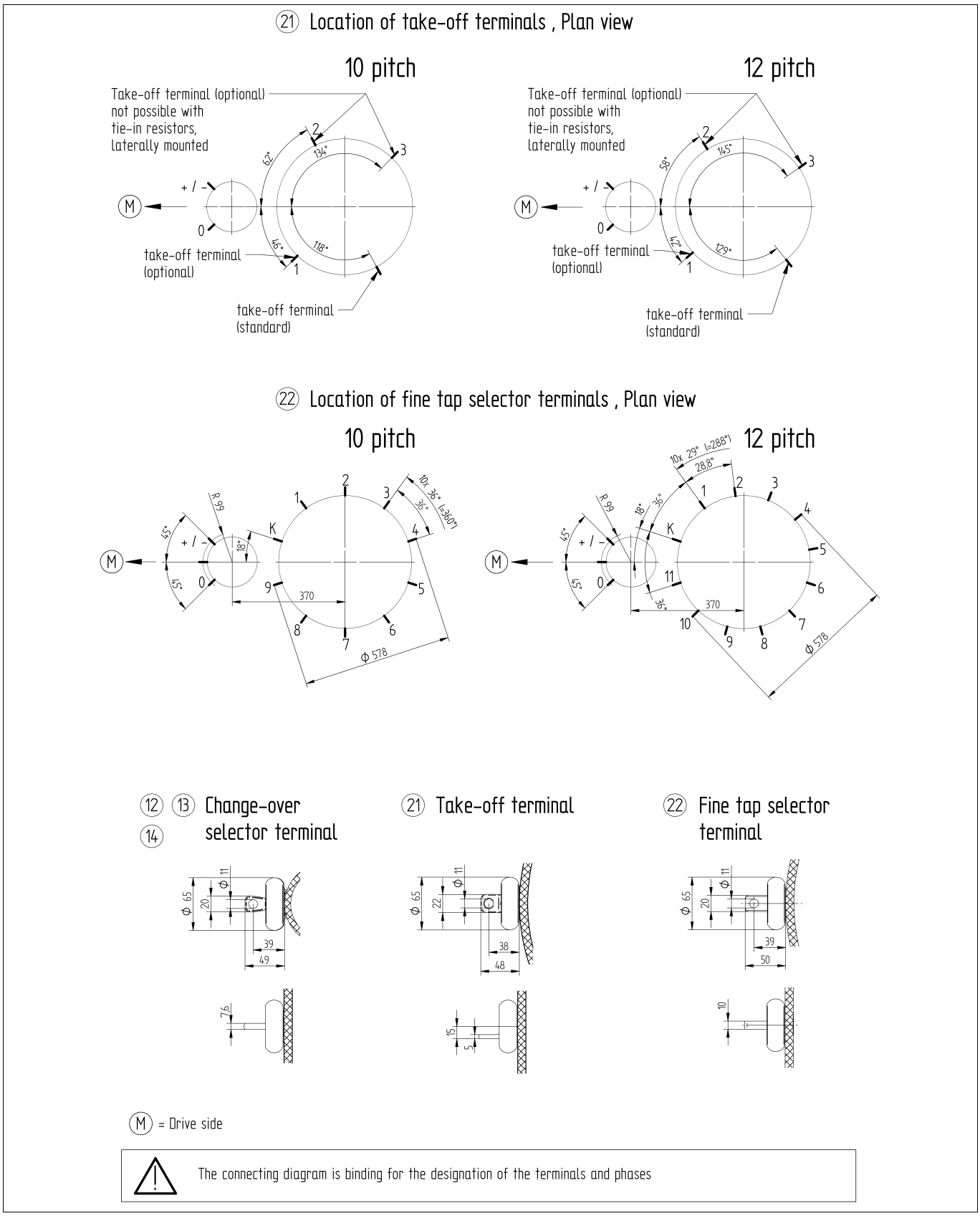

3.9 On-load tap-changer VACUTAP® VV, terminal dimensions - without change-over selector (737776)

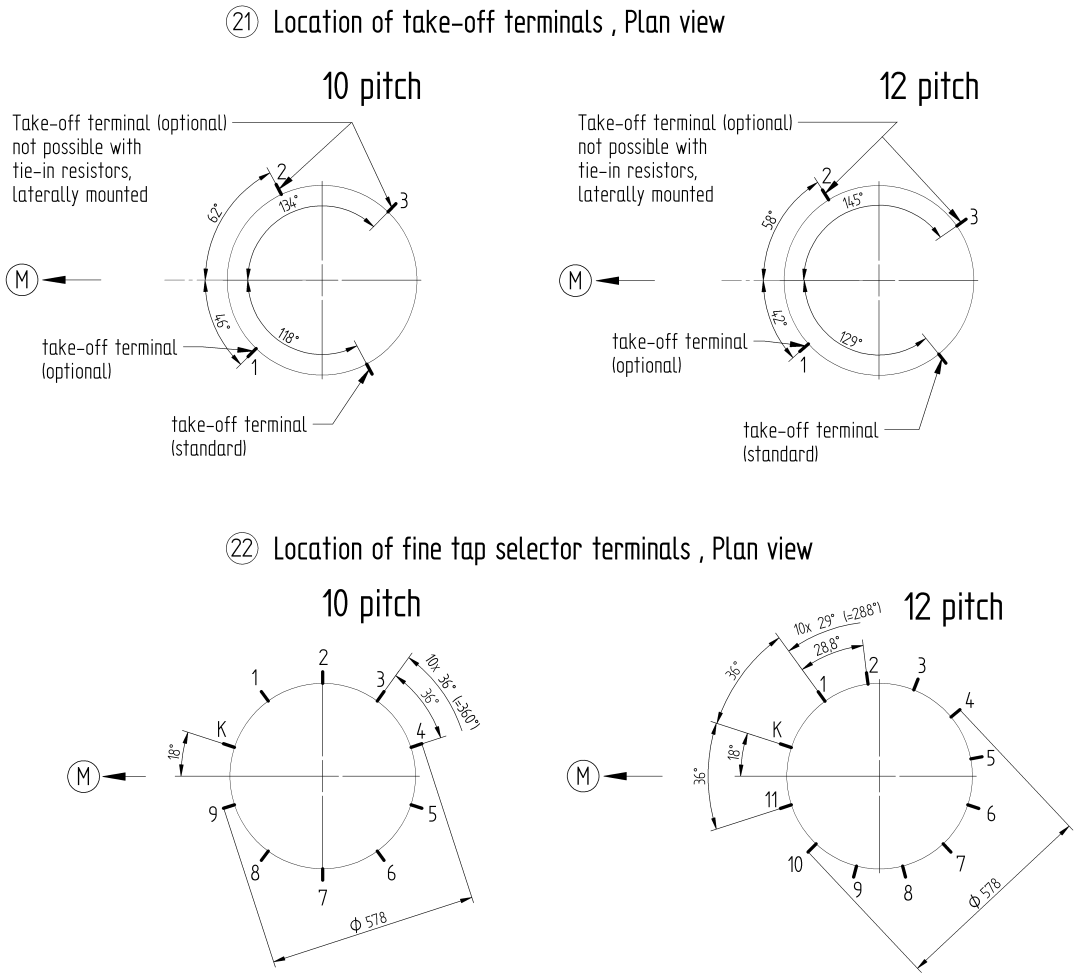

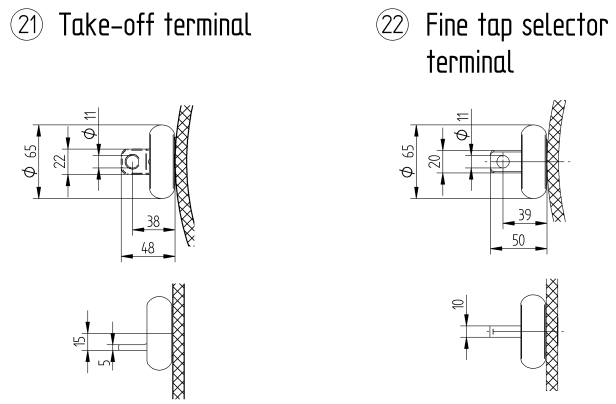

M = Drive side

⚠ The connecting diagram is binding for the designation of the terminals and phases

3.10 On-load tap-changer VACUTAP® VV, position of the connecting terminals (899051)

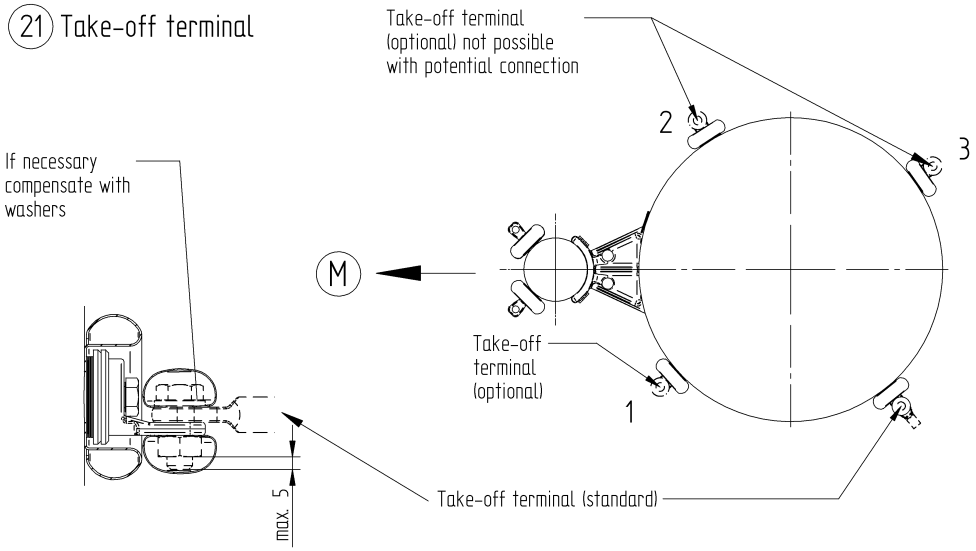

These take-off terminals (with or without take-off leads) are to be fitted with screening caps (included in MR's delivery) by the transformer manufacturer.

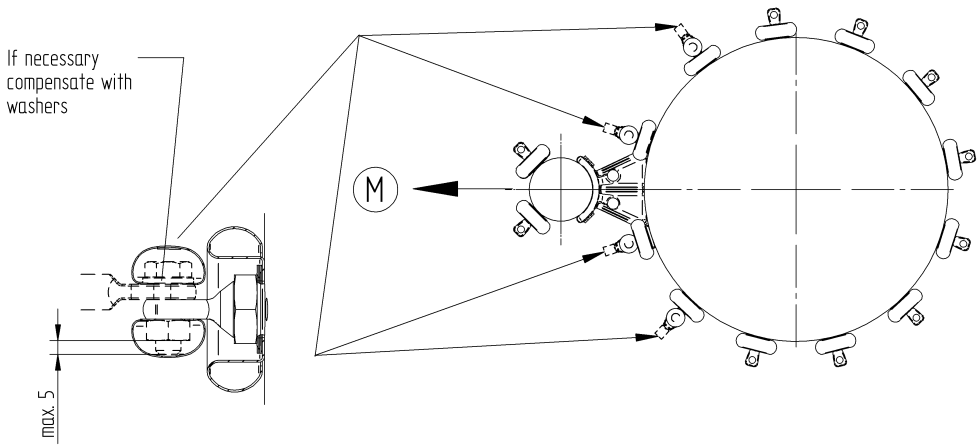

These terminals are to be fitted with screening caps (included in MR's delivery) by the transformer manufacturer.

M = Drive side

The connecting diagram is binding for the designation of the terminals and phases

3.11 On-load tap-changer VACUTAP® VV, oil suction pipe (optional) (739172)

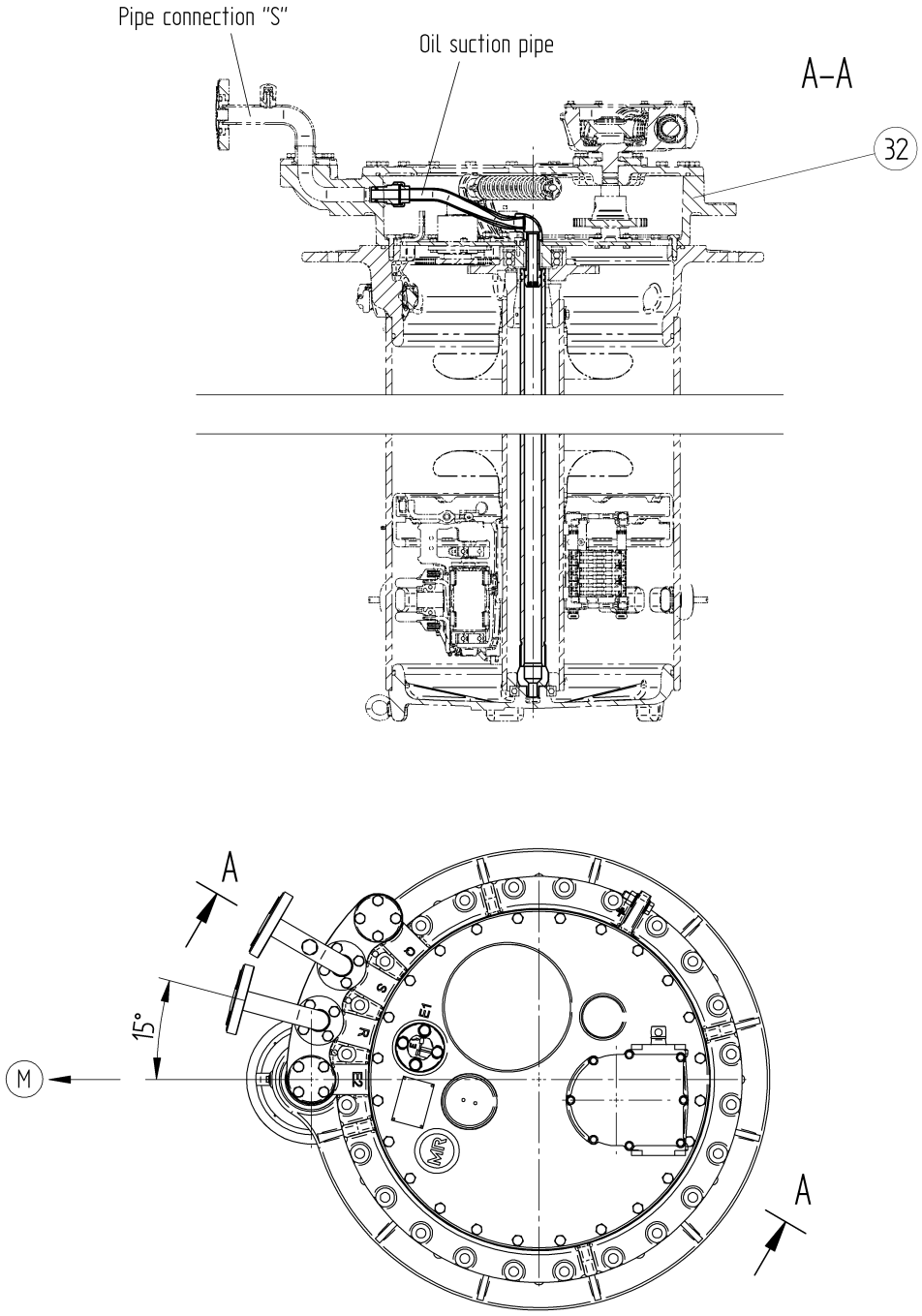

(M) Drive side

The upper part of the OLTC head (32) CANNOT be turned in the model with oil suction pipe , see drawing 737 060 :

3.12 On-load tap-changer VACUTAP® VV, tap-changer head without oil suction pipe (898863)

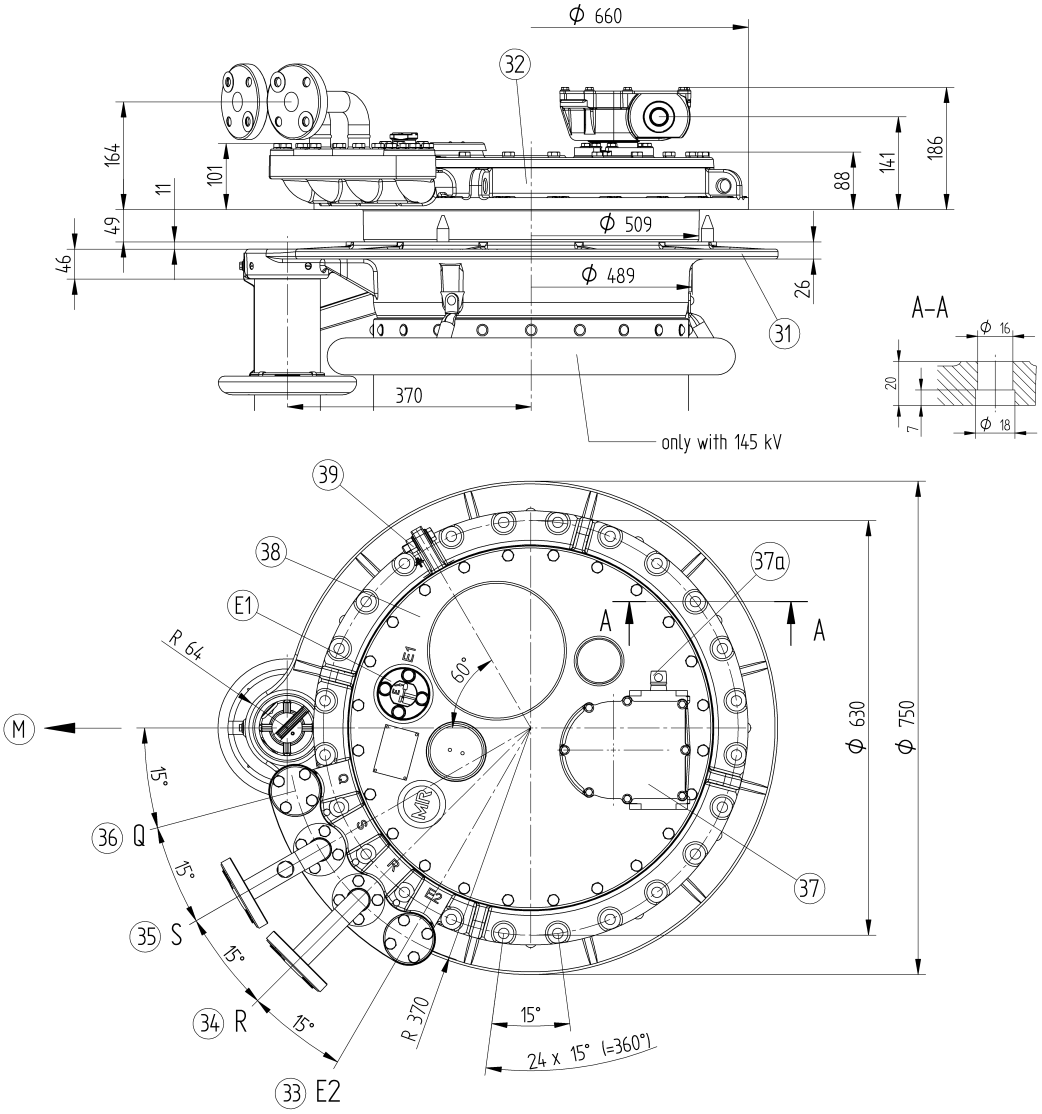

(E1) Bleeding facility for Tap-Changer

(31) Tap-Changer head - bottom part

(32) Tap-Changer head - top part , can be turned towards the bottom part (31) of the head in steps of 15°
The Tap-Changer head cover cannot be turned.

(33) E2 = Bleeding facility for space under the head outside the oil compartment

(34) Pipe connection R for protective relay

(35) Pipe connection S

(36) Pipe connection Q (optional)

Connections can be swivelled 360°
dimensions and selection 899 496 :

(37) Upper gear unit with drive shaft 37a , dimensions and selection see 737 782 :

(38) Tap changer head cover

(39) Earth connection M12

(M) Drive side

⚠ The upper part of the OLTC head (32) CANNOT be turned in the model with oil suction pipe , see drawing 737 060 :

3.13 On-load tap-changer VACUTAP® VV, OLTC head with oil suction pipe (737060)

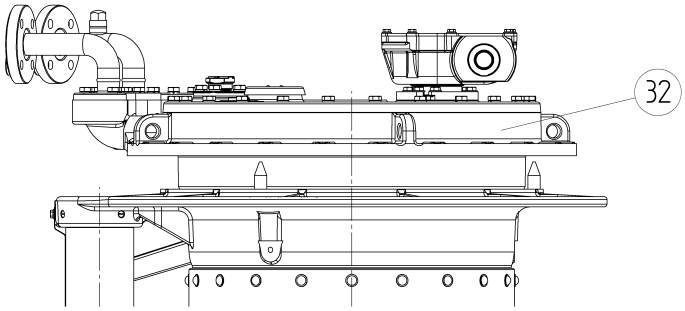

POSITION OF THE UPPER PART OF THE OLTC HEAD IN THE MODEL WITH OIL SUCTION PIPE

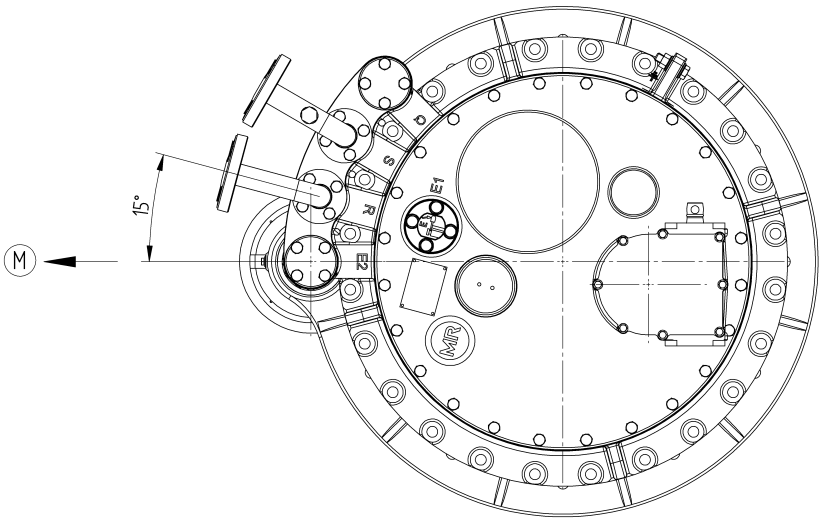

ALL OTHER DIMENSIONS OF THE OLTC HEAD SEE DRAWING 898 863 :

(M) = DRIVE SIDE

⚠ THE UPPER PART OF THE OLTC HEAD (32) CANNOT BE TURNED IN THE MODEL WITH OIL SUCTION PIPE

3.14 On-load tap-changer VACUTAP® VV, head cover design - standard design (737777)

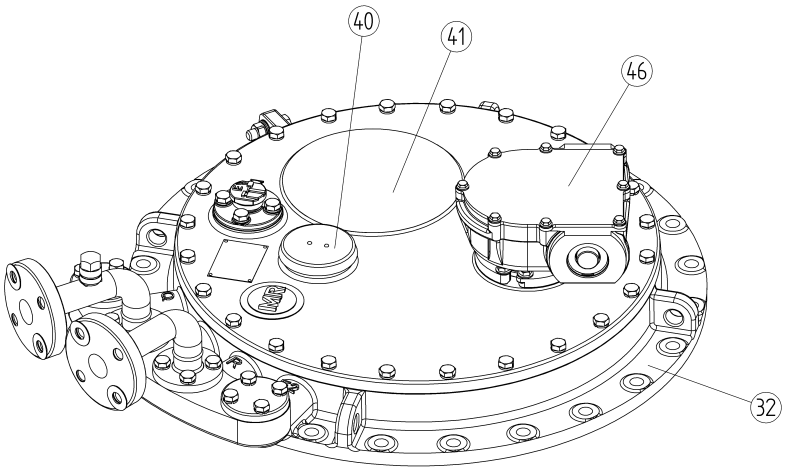

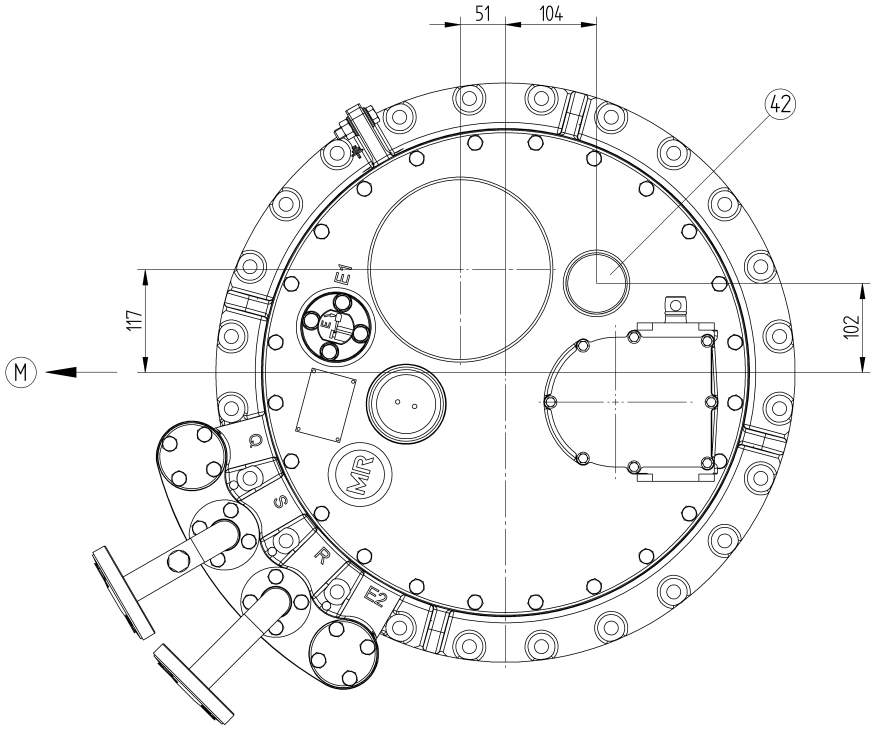

(32) Tap-Changer head - top part , can be turned towards the bottom part of the head in steps of 15°
The Tap-Changer head cover cannot be turned.

(40) Inspection glass cover for tap position indicator

(41) Burst pressure membrane

(42) Temperature sensor (optional)

(46) Upper gear unit , dimensions and selection see 737 782 :

(M) Drive side

⚠ The upper part of the OLTC head CANNOT be turned in the model with oil suction pipe , see drawing 737 060 :

3.15 On-load tap-changer VACUTAP® VV, head cover design, standard design with supervisory control (737778)

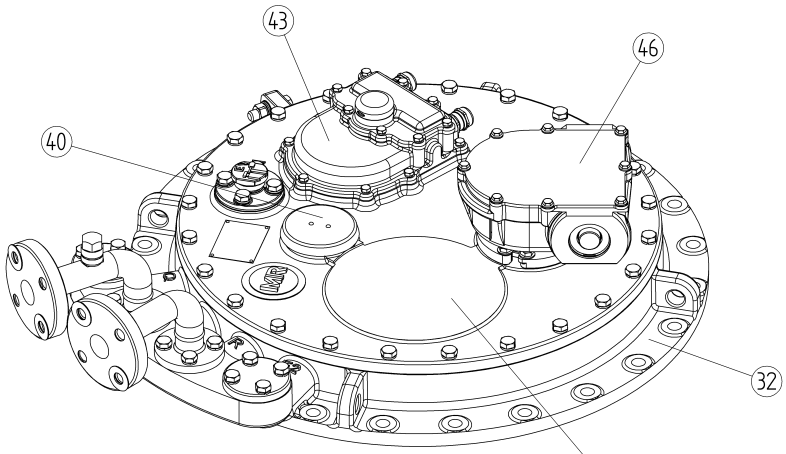

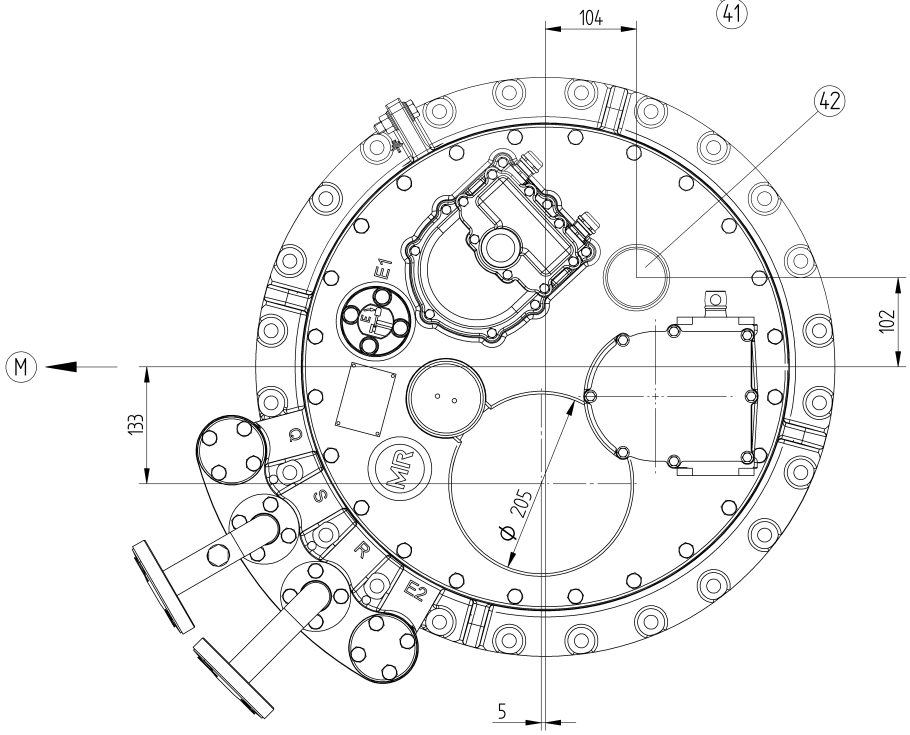

32 Tap-Changer head – top part , can be turned towards the bottom part of the head in steps of 15°
The Tap-Changer head cover cannot be turned.

40 Inspection glass cover for tap position indicator

41 Burst pressure membrane

42 Temperature sensor (optional)

43 Supervisory control , dimensions and selection see 733 452 :

46 Upper gear unit , dimensions and selection see 737 782 :

M Drive side

⚠ The upper part of the OLTC head CANNOT be turned in the model with oil suction pipe , see drawing 737 060 :

3.16 On-load tap-changer VACUTAP® VV, head cover design with flange for pressure relief device (737779)

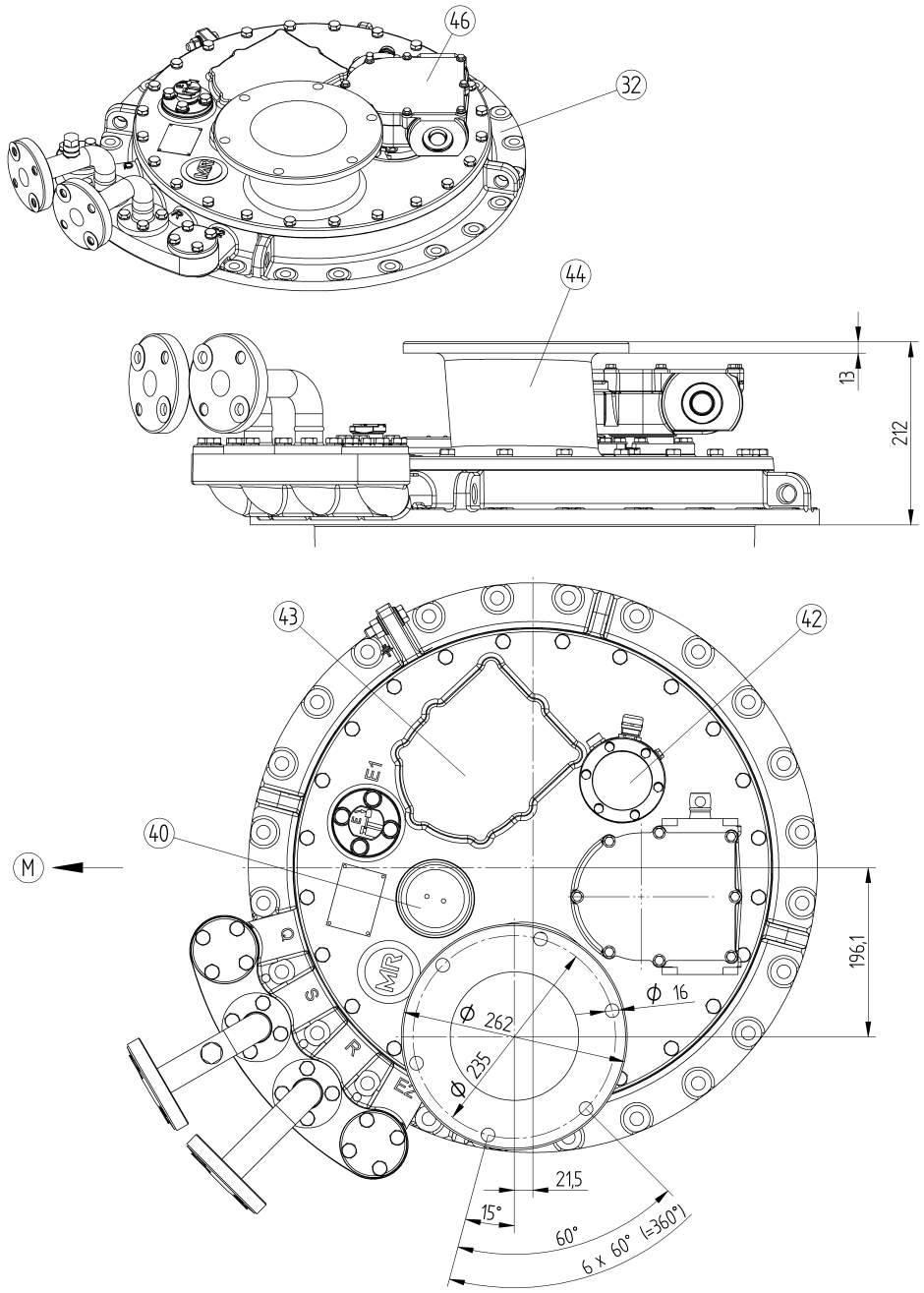

32 Tap-Changer head - top part , can be turned towards the bottom part of the head in steps of 15°
The Tap-Changer head cover cannot be turned.

40 Inspection glass cover for tap position indicator

42 Temperature sensor (optional)

43 Supervisory control , dimensions and selection see 733 452 :

44 Flange for pressure relief device

46 Upper gear unit , dimensions and selection see 737 782 :

M Drive side

⚠ The upper part of the OLTC head CANNOT be turned in the model with oil suction pipe , see drawing 737 060 :

3.17 On-load tap-changer VACUTAP® VV, head cover design with pressure relief device MPREC (737780)

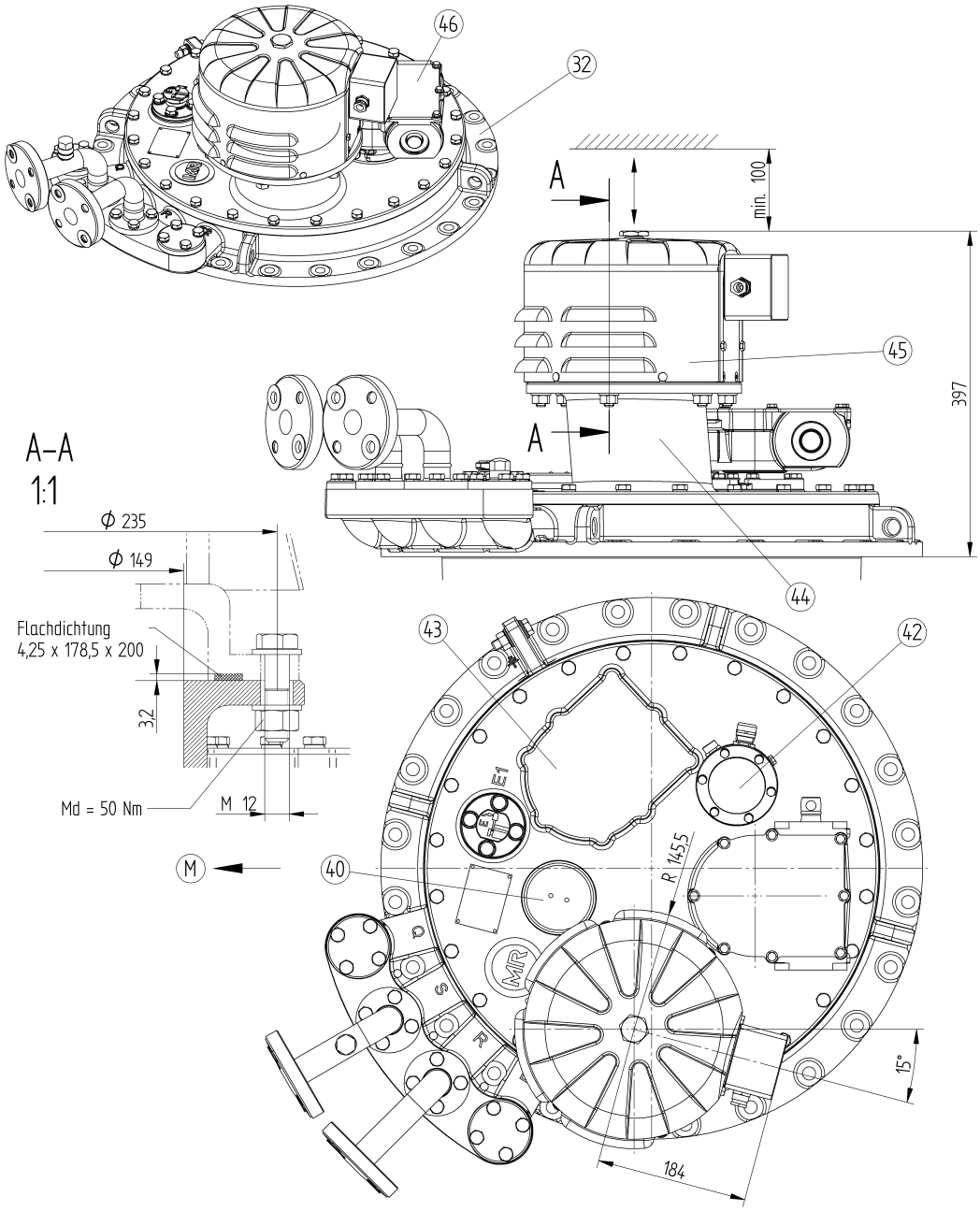

(32) Tap-Changer head – top part , can be turned towards the bottom part of the head in steps of 15°
The Tap-Changer head cover cannot be turned.

(40) Inspection glass cover for tap position indicator

(42) Temperature sensor (optional)

(43) Supervisory control , dimensions and selection see 733 452 :

(44) Flange for pressure relief device

(45) Pressure relief device , can be installed turned in 60° steps

(46) Upper gear unit , dimensions and selection see 737 782 :

(M) Drive side

⚠ The upper part of the OLTC head CANNOT be turned in the model with oil suction pipe , see drawing 737 060 :

3.18 On-load tap-changer VACUTAP® VV, head cover design, dimensions of tap change supervisory control (733452)

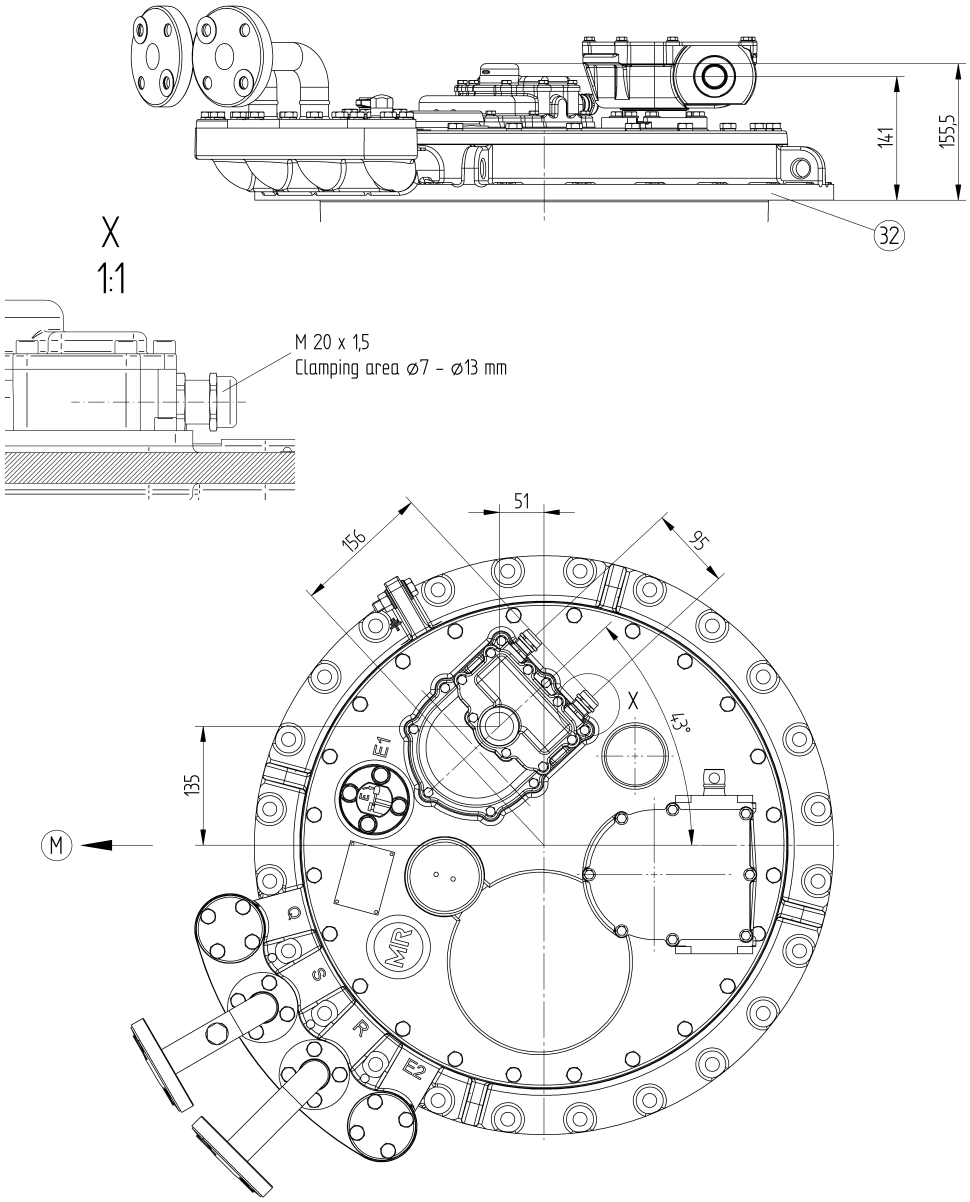

(32) Tap-Changer head - top part , can be turned towards the bottom part of the head in steps of 15°
The Tap-Changer head cover cannot be turned.

(M) Drive side

⚠ Take care when installing the electrical lines so that they do not abstruct the OLTC cover when it is opened for maintenance.

⚠ The upper part of the OLTC head CANNOT be turned in the model with oil suction pipe , see drawing 737 060 :

3.19 On-load tap-changer VACUTAP® VV, pipe connection (899496)

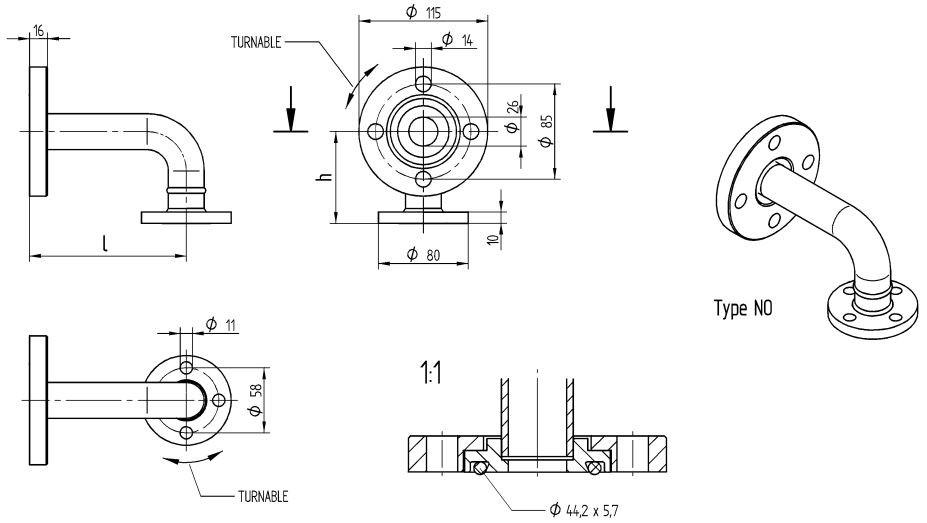

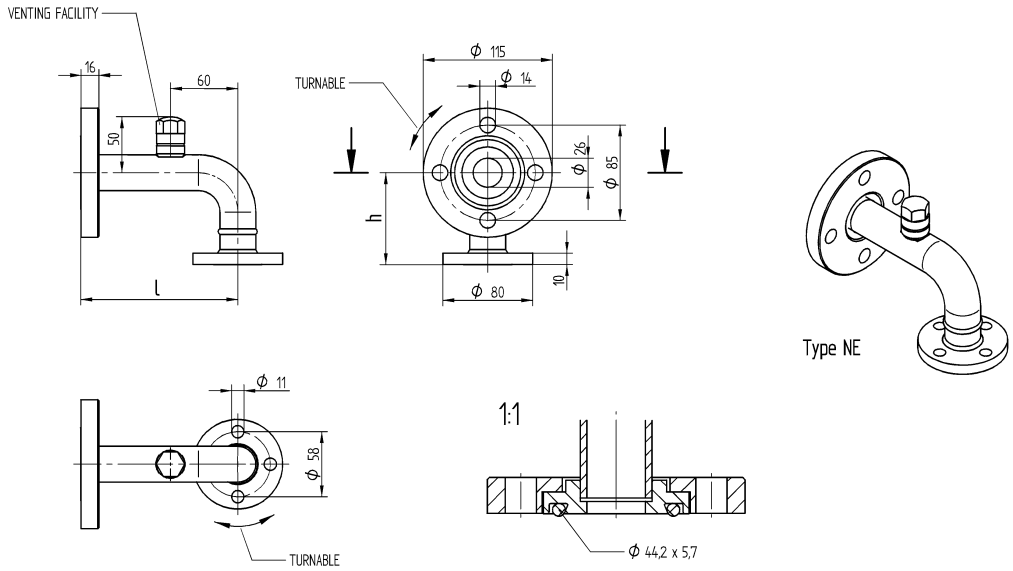

EXAMPLE FOR ORDERING A PIPE CONNECTION
WITHOUT VENTING FACILITY WITH l=140 AND h=45 :

" PIPE CONNECTION TYPE NO 140 x 45 "

	STANDARD DIMENSIONS		DESIGN	
	" l "	" h "	TYPE NO	TYPE NE
	140	45	●	
	140	68	●	●
PREFERRED DESIGN	140	82	●	●
	228,6	82		●
	140	132	●	
	140	183	●	
	140	255	●	●
	140	313	●	●

● = AVAILABLE

ALL FLANGES ARE TURNABLE BEFORE THE BOLTING

3.20 On-load tap-changer VACUTAP® VV, neutral point connection lead (738806)

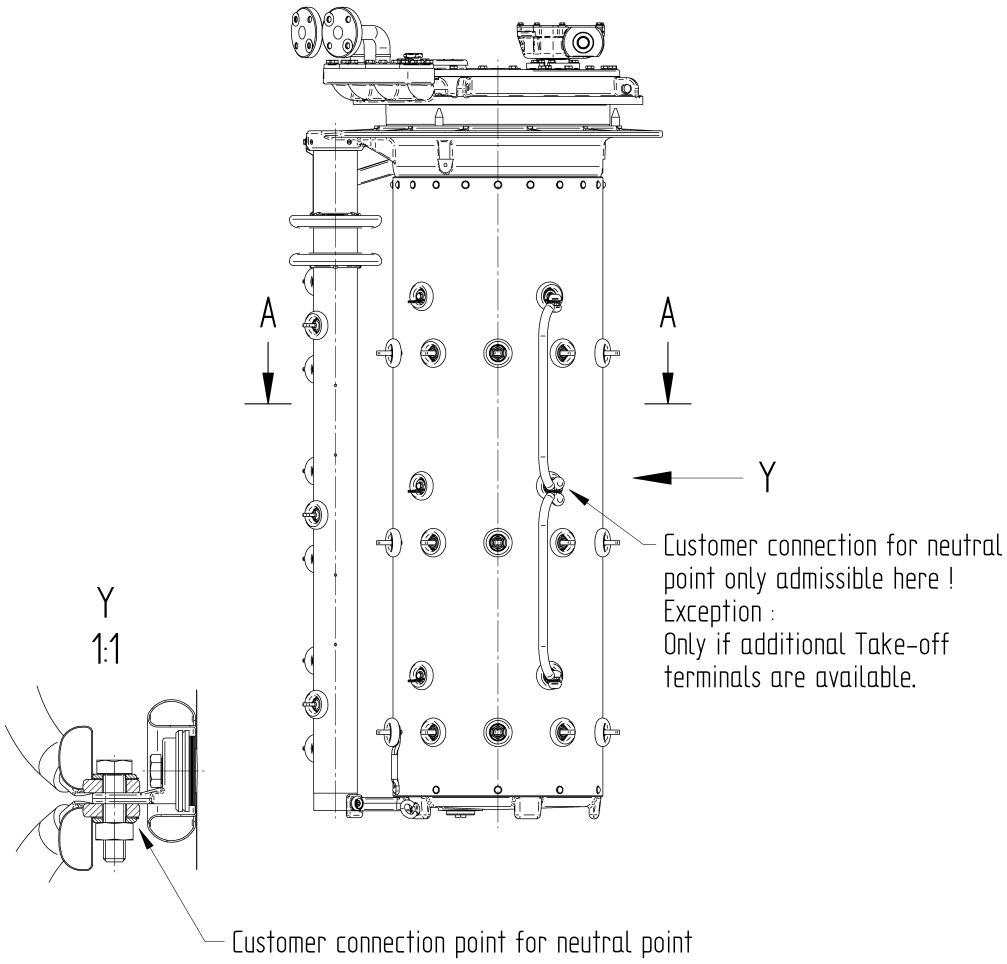

Position of neutral point connection lead

A-A , 10 pitch

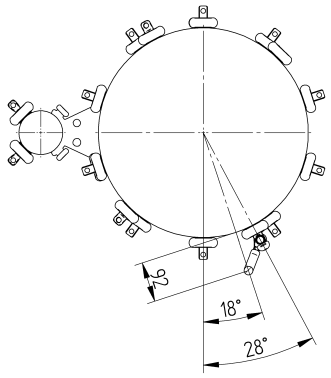

A-A , 12 pitch

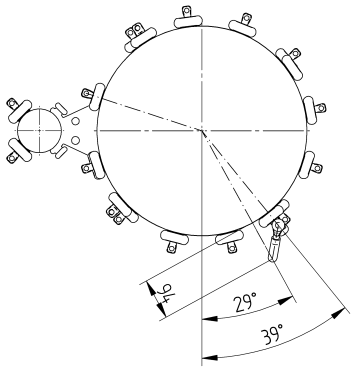

⚠ The position of the neutral point connection lead must not be changed !

3.21 On-load tap-changer VACUTAP® VV, tie-in resistors attached laterally (899407)

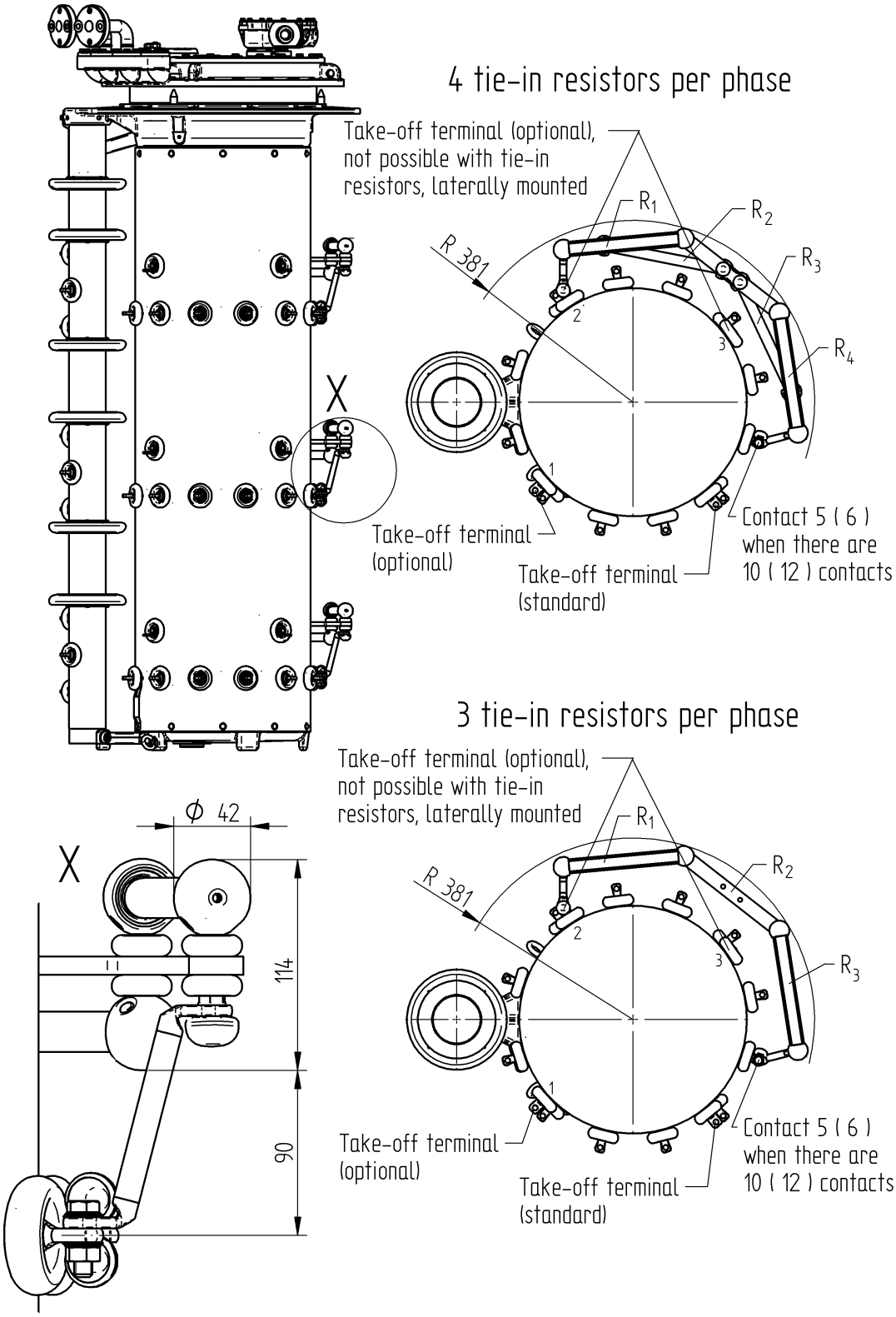

3.22 On-load tap-changer VACUTAP® VV, installation drawing (738902)

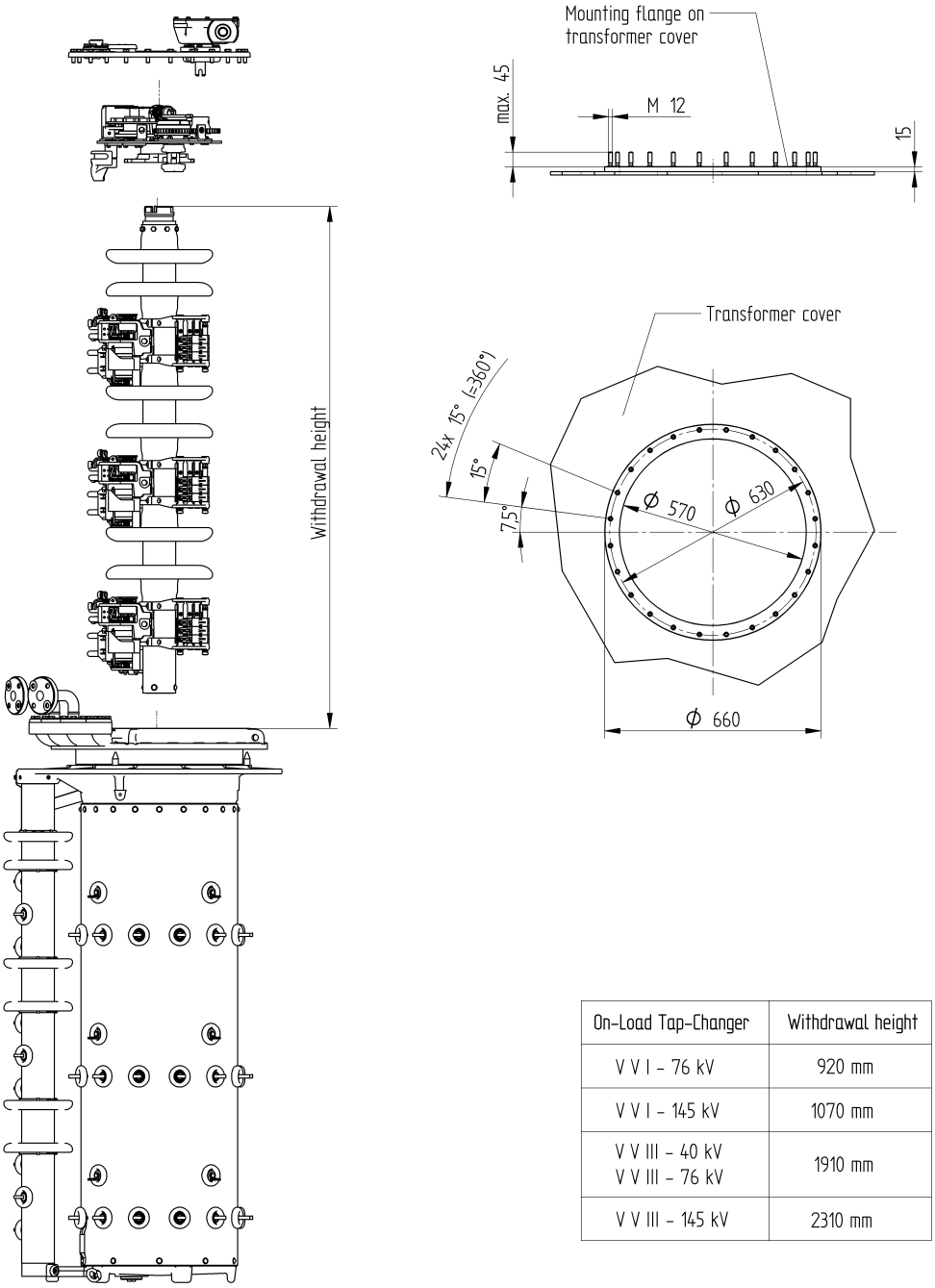

On-Load Tap-Changer	Withdrawal height
V V I - 76 kV	920 mm
V V I - 145 kV	1070 mm
V V III - 40 kV V V III - 76 kV	1910 mm
V V III - 145 kV	2310 mm

⚠ The withdrawal height corresponds to the clearance between the cover flange and the lifting device of the OLTC insert, while the mounting rod is inserted. Additional fixing pads, which may be necessary for affixing the OLTC insert, have to be considered too.

3.23 On-load tap-changer VACUTAP® VV, assembly drawing bell-type mounting (899110)

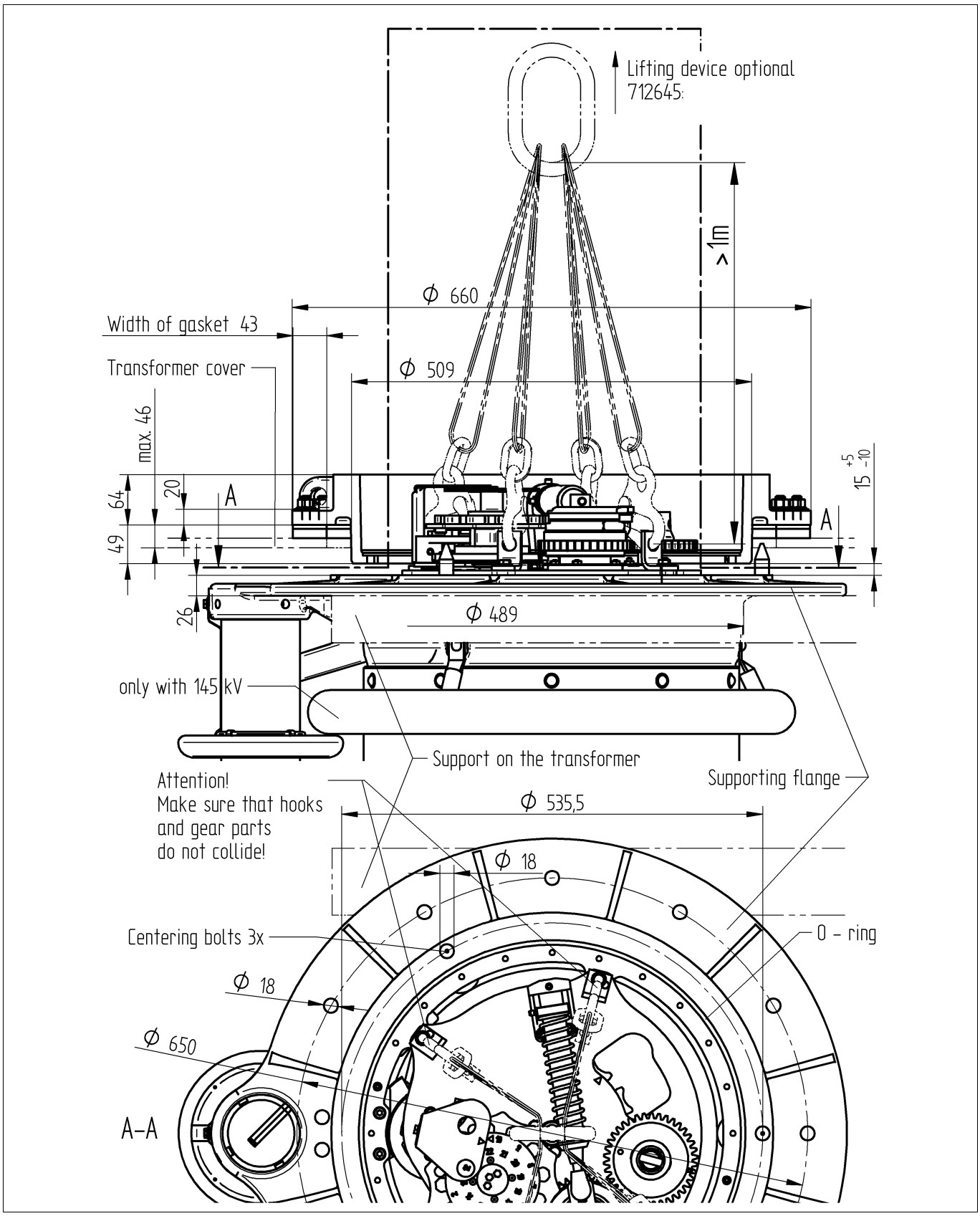

3.24 On-load tap-changer VACUTAP® VV, position of OLTC for bell-type mounting (899409)

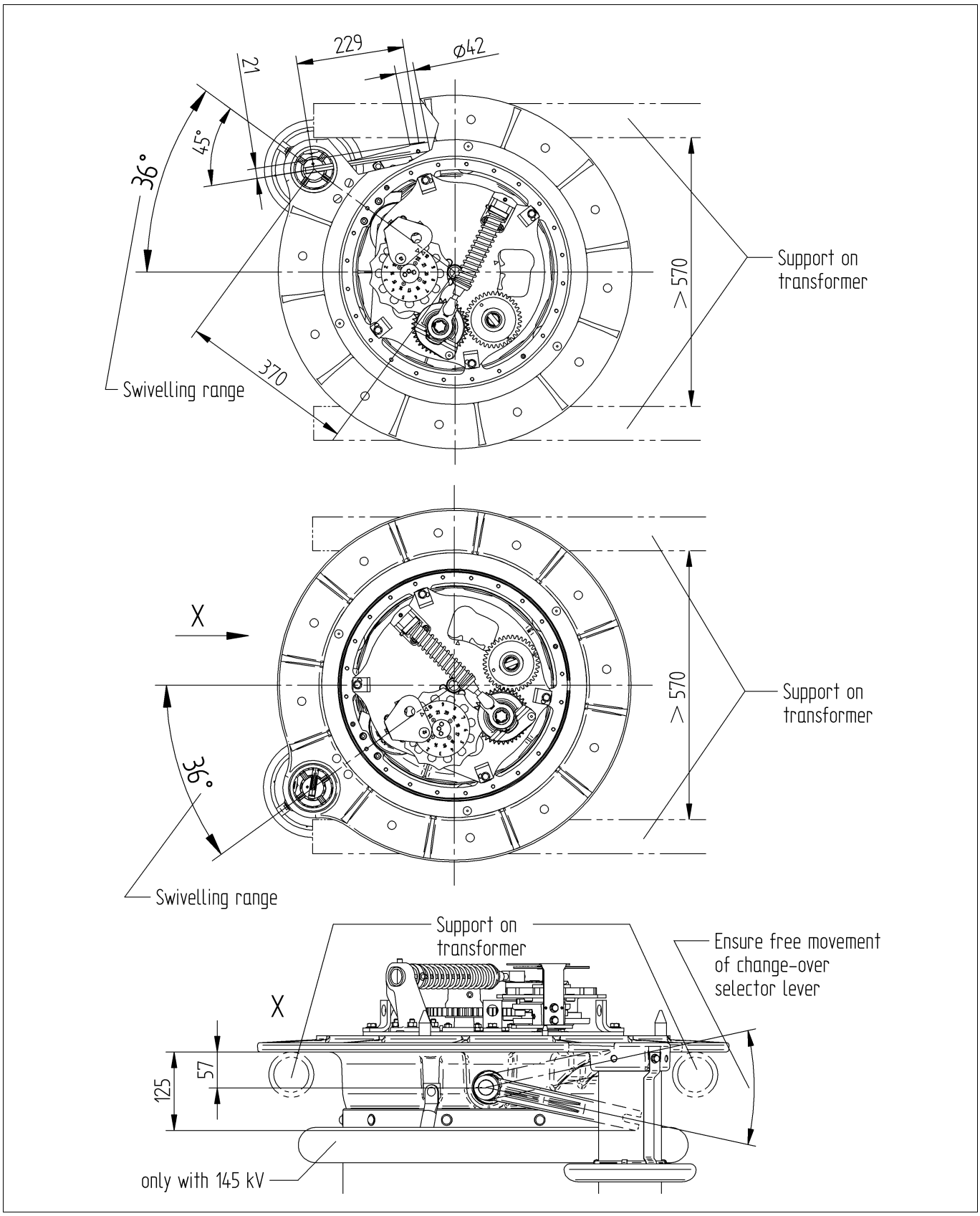

3.25 On-load tap-changer VACUTAP® VV, assembly drawing cover mounting (898866)

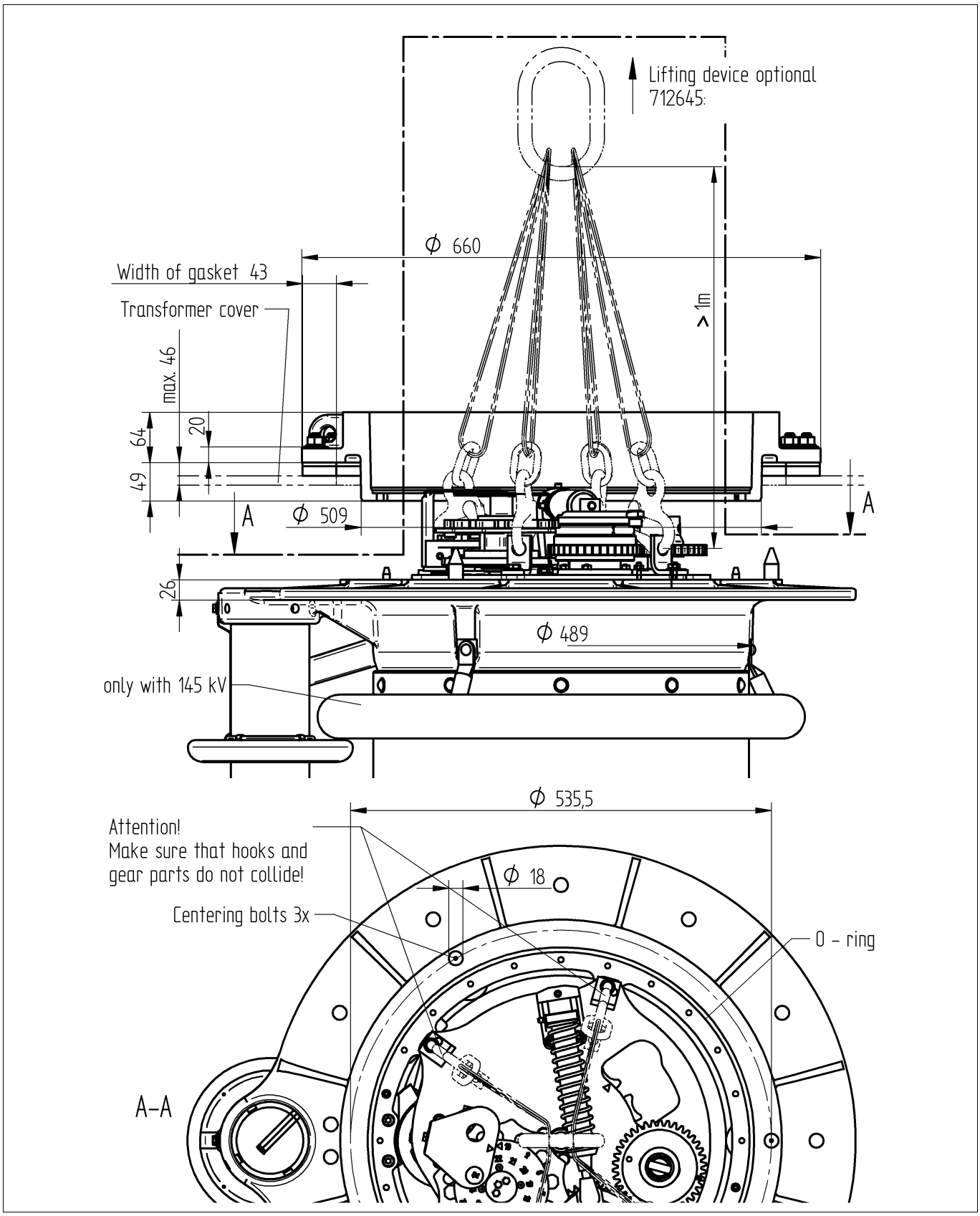

3.26 On-load tap-changer VACUTAP® VV, drive shaft versions of the upper gear unit (737782)

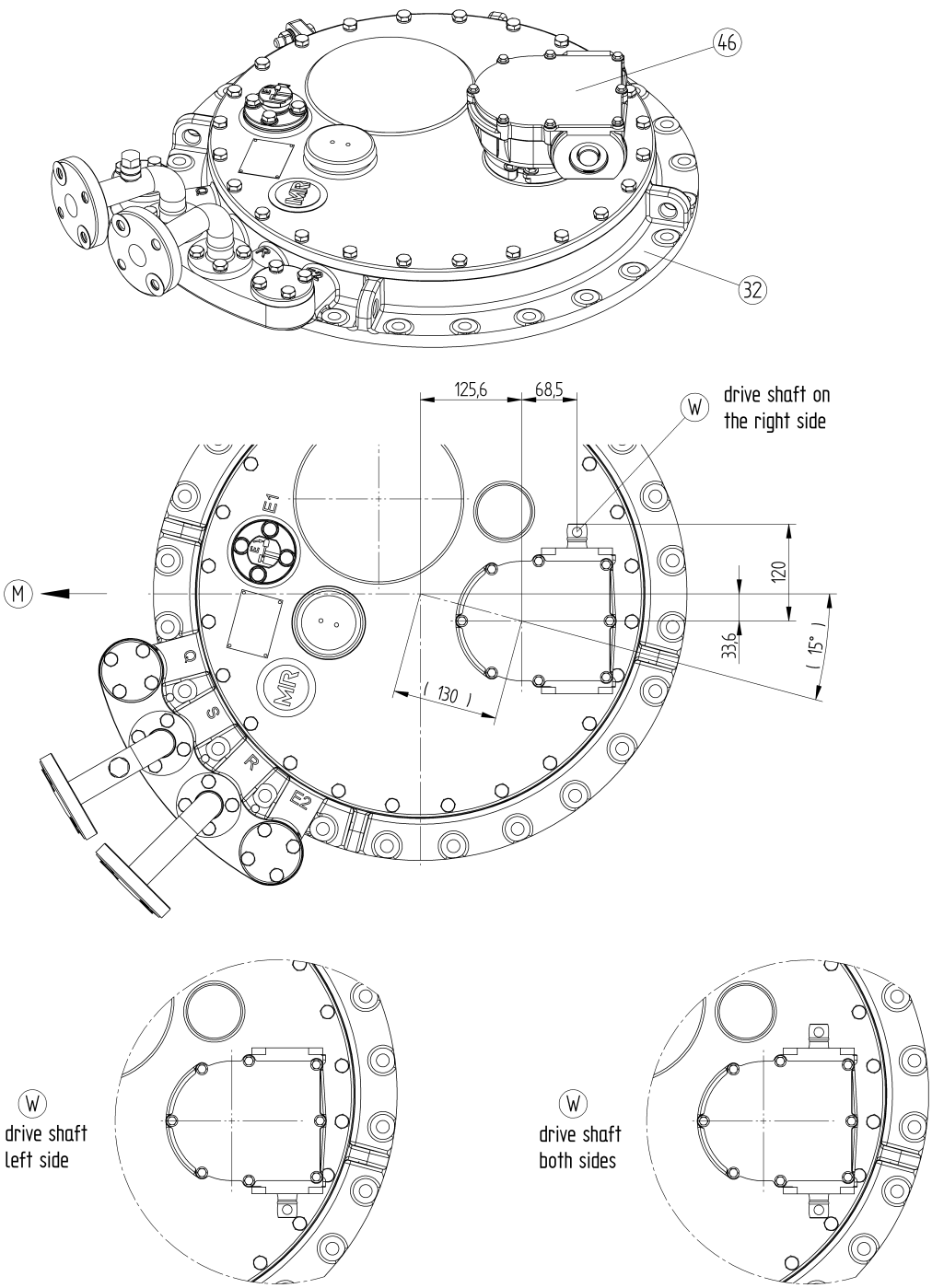

32 Tap-Changer head - top part , can be turned towards the bottom part of the head in steps of 15°
The Tap-Changer head cover cannot be turned.

46 Upper gear unit , steplessy turnable to 360° , Limitation of the swivelling range see 899 210 : and 899 211 :

W Drive side

⚠ The upper part of the OLTC head CANNOT be turned in the model with oil suction pipe , see drawing 737 060 :

3.27 On-load tap-changer VACUTAP® VV, swivelling range of upper gear unit, drive shaft on the left (899210)

Drive shaft on the left :

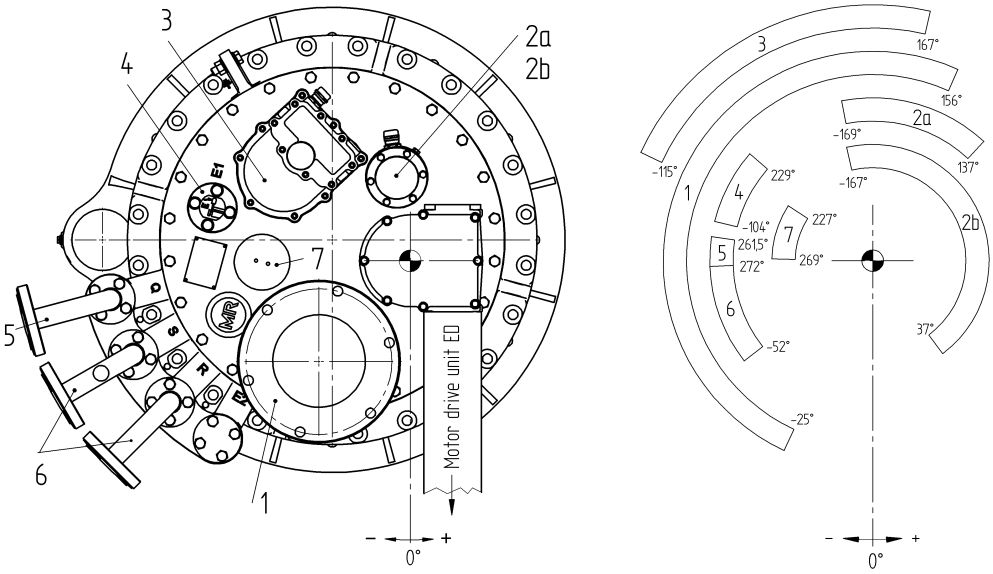

= Swivel range not possible because of :

1 = Flange for pressure relief device
2a = Temperature sensor or
2b = Thermometer case
3 = Supervisory control
4 = Bleeding facility
5 = Pipe connection "Q"
6 = Pipe connection "S" und "R" (Standard)

7 = This swivel range, which hides the position indication, should be avoided

Swivelling ranges :
By turning around its own axis and by the steplessly turnable upper gear unit, the tap changer can be adapted to the transformer.

The NOT usable swivelling ranges of the upper gear unit are shown above on the right.

Only for the design without oil suction pipe :
As the top part and the bottom part of the head can be turned to each other (in steps of 15°), the swivelling ranges change accordingly.

⚠ The upper part of the OLTC head CANNOT be turned in the model with oil suction pipe , see drawing 737 060 :

3.28 On-load tap-changer VACUTAP® VV, swivelling range of upper gear unit, drive shaft on the right (899211)

Drive shaft on the right :

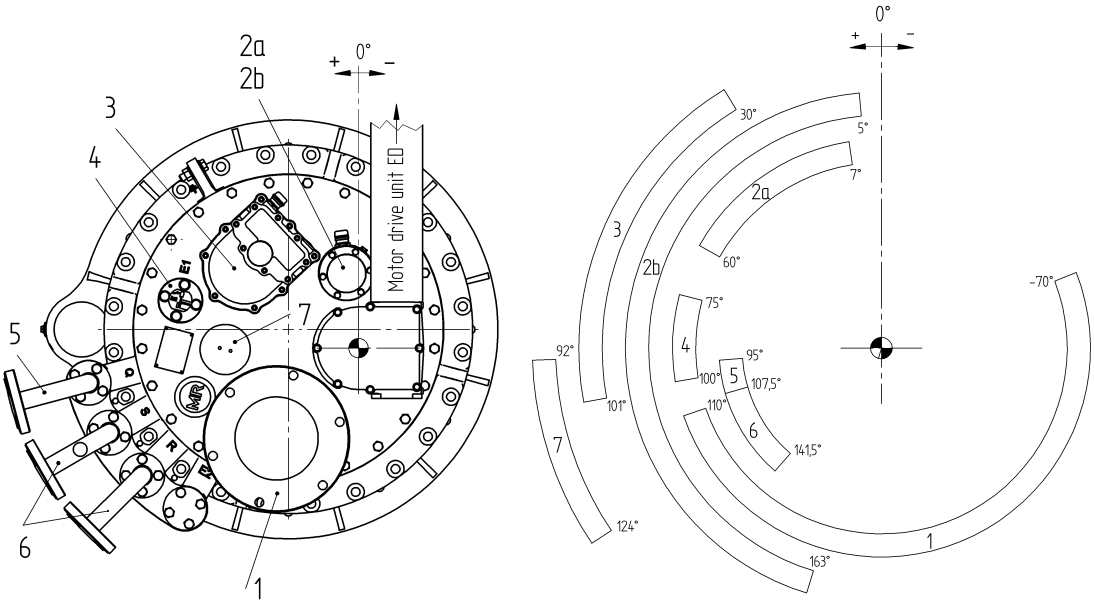

= Swivel range not possible because of :

1 = Flange for pressure relief device
2a = Temperature sensor or
2b = Thermometer case
3 = Supervisory control
4 = Bleeding facility
5 = Pipe connection "Q"
6 = Pipe connection "S" und "R" (Standard)

7 = This swivel range, which hides the position indication, should be avoided

Swivelling ranges :
By turning around its own axis and by the steplessly turnable upper gear unit, the tap changer can be adapted to the transformer.

The NOT usable swivelling ranges of the upper gear unit are shown above on the right.

Only for the design without oil suction pipe :
As the top part and the bottom part of the head can be turned to each other (in steps of 15°), the swivelling ranges change accordingly.

⚠ The upper part of the OLTC head CANNOT be turned in the model with oil suction pipe , see drawing 737 060 :

3.29 On-load tap-changer VACUTAP® VV, horizontal drive shaft (899169)

Arrangement G 4
(Standard design)

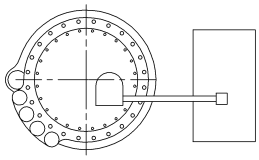

Arrangement G 11 , G 12
(Standard design)

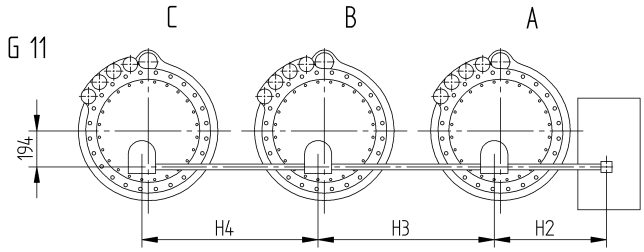

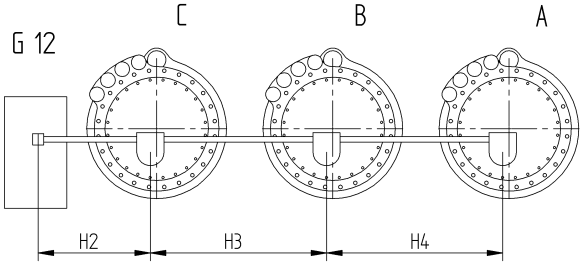

Arrangement G 9 , G 10
(Special design)

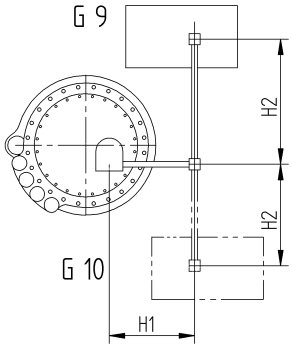

Arrangement G 13 , G 14
(Special design)

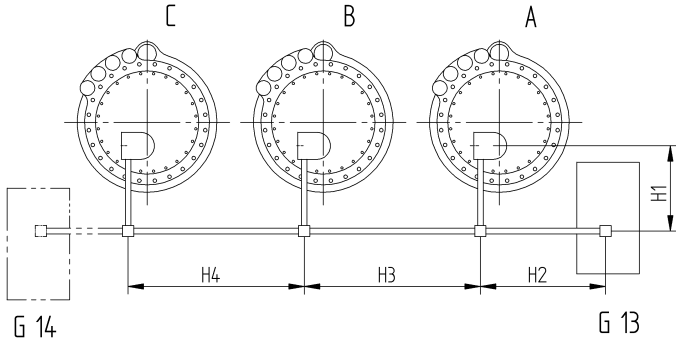

Minimum dimensions				Intermediate bearing required for		
Arrangement	H1	H2	H3 , H4	H1	H2	H3, H4
G 4	≧400	——	Determined by the insulation distance between poles A, B and C (can be mechanically realized up to min. 840 mm)	>2254	——	——
G 9, G 10	≧400	≧400		>2309	>2259	——
G 11, G 12	——	≧400		——	>2254	>2249
G 13, G 14	≧520	≧400		——	>2259	>2259

Attention : H1 and H2 can be mechanically realized as minimum dimensions,
larger when the upper gear unit is turned into a certain position.

⚠ The representations are only examples. It should be checked first if the position (swivel range) of the upper gear unit is possible. See here also 899 210 : und 899 211 :

3.30 On-load tap-changer VACUTAP® VV, transformer with on-load tap-changer, schematic drawing (899759)

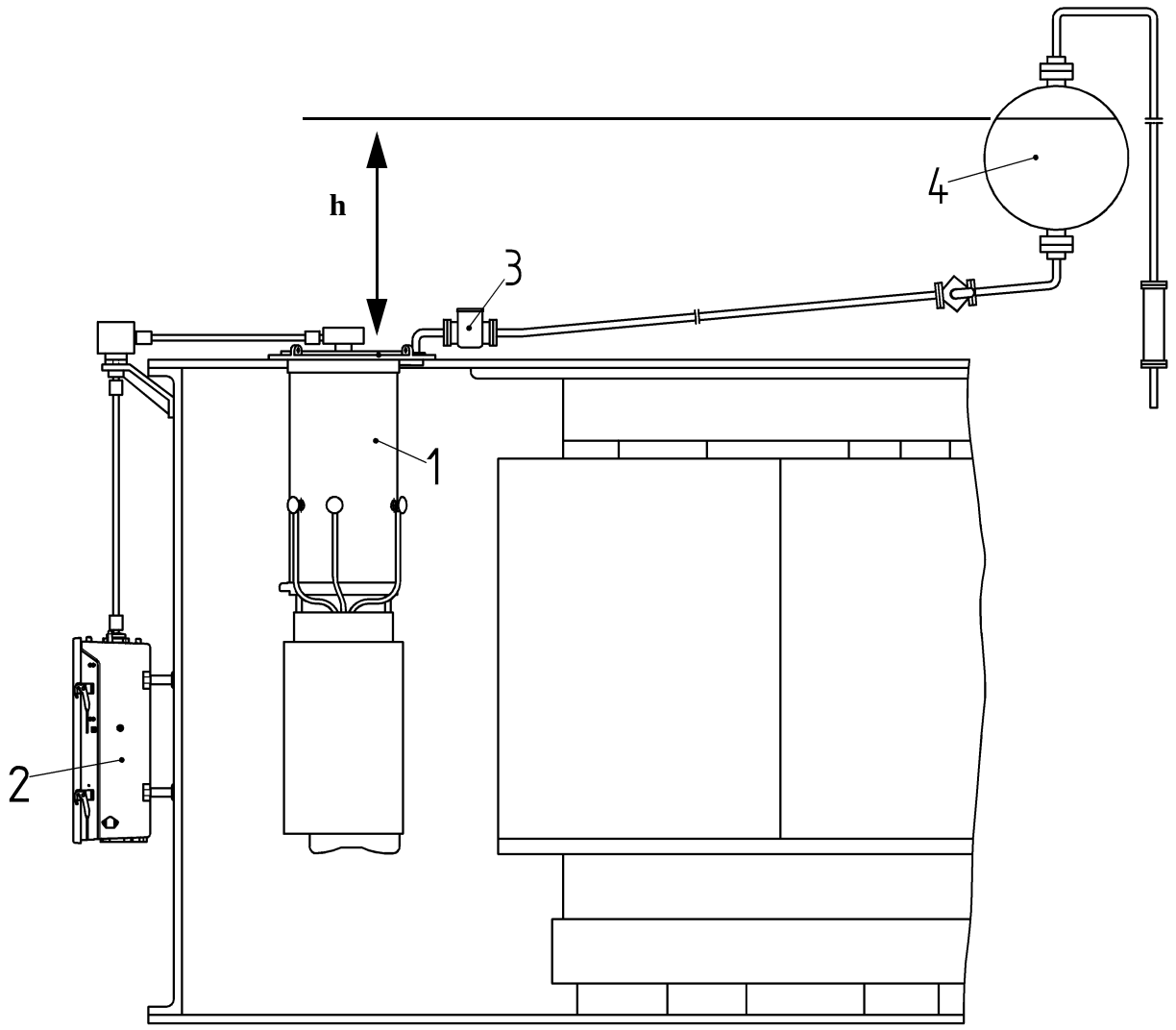

1) On-load tap-changer
2) Motor-drive unit
3) Protective relay
4) Oil conservator

www.reinhausen.com

©Maschinenfabrik Reinhausen GmbH
Falkensteinstrasse 8
D - 93059 Regensburg

Phone: +49 (0)941 4090 0
Fax: +49 (0)941 4090 7001
E-Mail: sales@reinhausen.com

TD 203/05 EN • 01/17 • F0112804 • Printed in Germany