On-load tap-changer OILTAP® V

Installation and commissioning instructions

4427491/01 EN

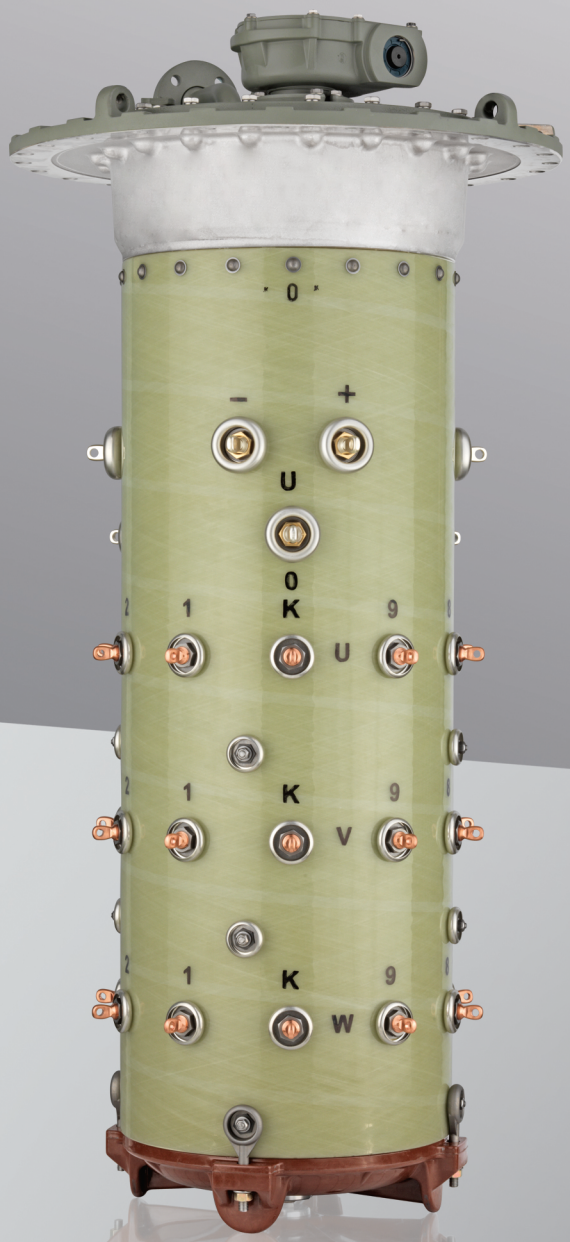

The original operating instructions were written in German.

Table of contents

1 Introduction

This technical file contains detailed descriptions of the safe and proper installation, connection, and commissioning of the product.

It also includes safety instructions and general information about the product.

Information about operation can be found in the operating instructions.

This technical file is intended solely for specially trained and authorized personnel.

1.1 Manufacturer

The product is manufactured by:

Maschinenfabrik Reinhausen GmbH

Falkensteinstraße 8
93059 Regensburg, Germany
Tel.: (+49) 9 41/40 90-0
Fax: (+49) 9 41/40 90-7001
E-mail: sales@reinhausen.com

Further information on the product and copies of this technical file are available from this address if required.

1.2 Completeness

This technical file is incomplete without the supporting documents.

The following documents are considered supporting documents:

- Unpacking instructions
- Supplement
- Routine test report
- Connection diagrams
- Dimensional drawings
- Order confirmation

1.3 Safekeeping

Keep this technical file and all supporting documents ready at hand and accessible for future use at all times.

1.4 Notation conventions

This section contains an overview of the symbols and textual emphasis used.

1.4.1 Hazard communication system

Warnings in this technical file are displayed as follows.

1.4.1.1 Warning relating to section

Warnings relating to sections refer to entire chapters or sections, sub-sections or several paragraphs within this technical file. Warnings relating to sections use the following format:

⚠ WARNING **Type of danger!**

Source of the danger and outcome.

► Action

► Action

1.4.1.2 Embedded warning information

Embedded warnings refer to a particular part within a section. These warnings apply to smaller units of information than the warnings relating to sections. Embedded warnings use the following format:

⚠ DANGER! Instruction for avoiding a dangerous situation.

1.4.1.3 Signal words and pictograms

The following signal words are used:

Signal word	Definition
DANGER	Indicates a hazardous situation which, if not avoided, will result in death or serious injury.
WARNING	Indicates a hazardous situation which, if not avoided, could result in death or serious injury.
CAUTION	Indicates a hazardous situation which, if not avoided, could result in minor or moderate injury.
NOTICE	Indicates measures to be taken to prevent damage to property.

Table 1: Signal words in warning notices

Pictograms warn of dangers:

Pictogram	Definition
	Warning of a danger point
	Warning of dangerous electrical voltage
	Warning of combustible substances
	Warning of danger of tipping
	Warning of danger of crushing

Table 2: Pictograms used in warning notices

1.4.2 Information system

Information is designed to simplify and improve understanding of particular procedures. In this technical file it is laid out as follows:

Important information.

1.4.3 Instruction system

This technical file contains single-step and multi-step instructions.

Single-step instructions

Instructions which consist of only a single process step are structured as follows:

Aim of action
✓ Requirements (optional).
► Step 1 of 1.
⇨ Result of step (optional).
⇨ Result of action (optional).

Multi-step instructions

Instructions which consist of several process steps are structured as follows:

Aim of action
✓ Requirements (optional).
1. Step 1.
⇨ Result of step (optional).
2. Step 2.
⇨ Result of step (optional).
⇨ Result of action (optional).

2 Safety

This technical file contains detailed descriptions on the safe and proper installation, connection, commissioning and monitoring of the product.

- Read this technical file through carefully to familiarize yourself with the product.
- This technical file is a part of the product.
- Read and observe the safety instructions provided in this chapter in particular.
- Observe the warnings in this technical file in order to avoid function-related dangers.
- The product is manufactured on the basis of state-of-the-art technology. Nevertheless, risks to life and limb of the user or impairment of the product and other material assets may occur during use due to function-related dangers.

2.1 Appropriate use

The product is an on-load tap-changer and adjusts the transmission ratio of transformers without interrupting the load flow. The product is designed solely for use in electrical energy systems and facilities. If used as intended and in compliance with the requirements and conditions specified in this technical file as well as the warning notices in this technical file and attached to the product, then the product does not present any danger to people, property or the environment. This applies throughout the service life of the product, from delivery, installation and operation to removal and disposal.

The following is considered appropriate use:

- Use the product only with the transformer specified in the order.
- The serial numbers of on-load tap-changer and on-load tap-changer accessories (drive, drive shaft, bevel gear, protective relay, etc.) must match if the on-load tap-changer and on-load tap-changer accessories are supplied as a set for one order.
- You will find the standard valid for the product and the year of issue on the nameplate.
- Operate the product in accordance with this provided technical file, the agreed delivery conditions and technical data.
- Ensure that all necessary work is performed by qualified personnel only.
- Only use the equipment and special tools included in delivery for the intended purpose and in accordance with the specifications of this technical file.

2.2 Fundamental safety instructions

To prevent accidents, disruptions and damage as well as unacceptable adverse effects on the environment, those responsible for transport, installation, operation, maintenance and disposal of the product or parts of the product must ensure the following:

Personal protective equipment

Loosely worn or unsuitable clothing increases the danger of becoming trapped or caught up in rotating parts and the danger of getting caught on protruding parts. This increases the danger to life and limb.

- All necessary devices and personal protective equipment required for the specific task, such as a hard hat, safety footwear, etc. must be worn. Observe the section "Personal protective equipment" [▶Section 2.4, Page 14].
- Never wear damaged personal protective equipment.
- Never wear rings, necklaces, or other jewelry.
- If you have long hair, wear a hairnet.

Work area

Untidy and poorly lit work areas can lead to accidents.

- Keep the work area clean and tidy.
- Make sure that the work area is well lit.
- Observe the applicable laws for accident prevention in the relevant country.

Working during operation

The product may only be operated in a sound, operational condition. Otherwise it poses a danger to life and limb.

- Regularly check the operational reliability of safety equipment.
- Comply with the inspection work, maintenance work and maintenance intervals described in this technical file.

Explosion protection

Highly flammable or explosive gases, vapors and dusts can cause serious explosions and fire. This increases the danger to life and limb.

- Do not install, operate or perform maintenance work on the product in areas where a risk of explosion is present.

Safety markings

Warning signs and safety information plates are safety markings on the product. They are an important aspect of the safety concept.

- Observe all safety markings on the product.
- Make sure all safety markings on the product remain intact and legible.
- Replace safety markings that are damaged or missing.

Ambient conditions

To ensure reliable and safe operation, the product must only be operated under the ambient conditions specified in the technical data.

- Observe the specified operating conditions and requirements for the installation location.

Auxiliary materials and operating materials

Auxiliary materials and operating materials not approved by the manufacturer can lead to personal injury, damage to property and malfunctions of the product.

- For the on-load tap-changer oil compartment, only use insulating fluids that meet the requirements in accordance with IEC 60296.
- If approved by the transformer manufacturer, you can use alternative insulating fluids approved by Maschinenfabrik Reinhausen GmbH in the transformer tank.
- It is imperative that you consult with Maschinenfabrik Reinhausen GmbH because specific selector operating conditions apply to alternative insulating fluids.
- Only use conductive and grounded hoses, pipes, and pump equipment that are approved for flammable liquids.
- Only use lubricants and auxiliary materials approved by the manufacturer.
- Contact the manufacturer.

Modifications and conversions

Unauthorized or inappropriate changes to the product may lead to personal injury, material damage and operational faults.

- Only modify the product after consultation with the manufacturer.

Spare parts

Spare parts not approved by the manufacturer may lead to physical injury, damage to the product and operational faults.

- Only use spare parts approved by the manufacturer.
- Contact the manufacturer.

2.3 Personnel qualification

The person responsible for assembly, commissioning, operation, maintenance and inspection must ensure that the personnel are sufficiently qualified.

Electrically skilled person

The electrically skilled person has a technical qualification and therefore has the required knowledge and experience, and is also conversant with the applicable standards and regulations. The electrically skilled person is also proficient in the following:

- Can identify potential dangers independently and is able to avoid them.
- Is able to perform work on electrical systems.
- Is specially trained for the working environment in which (s)he works.
- Must satisfy the requirements of the applicable statutory regulations for accident prevention.

Electrically trained persons

An electrically trained person receives instruction and guidance from an electrically skilled person in relation to the tasks undertaken and the potential dangers in the event of inappropriate handling as well as the protective devices and safety measures. The electrically trained person works exclusively under the guidance and supervision of an electrically skilled person.

Operator

The operator uses and operates the product in line with this technical file. The operating company provides the operator with instruction and training on the specific tasks and the associated potential dangers arising from improper handling.

Technical Service

We strongly recommend having maintenance, repairs and retrofitting carried out by our Technical Service department. This ensures that all work is performed correctly. If maintenance is not carried out by our Technical Service department, please ensure that the personnel who carry out the maintenance are trained and authorized by Maschinenfabrik Reinhausen GmbH to carry out the work.

Authorized personnel

Authorized personnel are trained by Maschinenfabrik Reinhausen GmbH to carry out special maintenance.

2.4 Personal protective equipment

Personal protective equipment must be worn during work to minimize risks to health.

- Always wear the personal protective equipment required for the job at hand.
- Never wear damaged personal protective equipment.
- Observe information about personal protective equipment provided in the work area.

Personal protective equipment to be worn at all times

	**Protective clothing** Close-fitting work clothing with a low tearing strength, with tight sleeves and with no protruding parts. It mainly serves to protect the wearer against being caught by moving machine parts.
	**Safety shoes** To protect against falling heavy objects and slipping on slippery surfaces.

Special personal protective equipment for particular environments

	**Safety glasses** To protect the eyes from flying parts and splashing liquids.
	**Visor** To protect the face from flying parts and splashing liquids or other dangerous substances.
	**Hard hat** To protect from falling and flying parts and materials.
	**Hearing protection** To protect from hearing damage.
	**Protective gloves** To protect from mechanical, thermal, and electrical hazards.

3 Product description

This chapter contains an overview of the design and function of the product.

3.1 Scope of delivery

The product is packaged with protection against moisture and is usually delivered as follows:

- On-load tap-changer
- Drive shaft with coupling parts and bevel gear
- Protective devices
- Technical files

Please refer to the delivery slip for full details of scope of delivery.

On-load tap-changers can also be provided as an on-load tap-changer set with a common motor-drive unit.

Note the following information:

- Check the shipment for completeness on the basis of the shipping documents.
- Store the parts in a dry place until installation
- The product must remain in its airtight, protective wrapping and may only be removed immediately before installation

You will find more information in the "Packaging, transport, and storage" [▶Section 4, Page 33] chapter.

3.2 On-load tap-changer

3.2.1 Function description

On-load tap-changers are used to adjust the transmission ratio of transformers without interrupting the load flow. This makes it possible to compensate for aspects such as fluctuations in voltage occurring in the power transmission grid. For this purpose, on-load tap-changers are fitted in transformers and connected to the active part of the transformer.

A motor-drive unit which receives a control impulse (e.g. from a voltage regulator) changes the operating position of the on-load tap-changer, as a result of which the transformer's transmission ratio is adapted to the prevailing operating requirements.

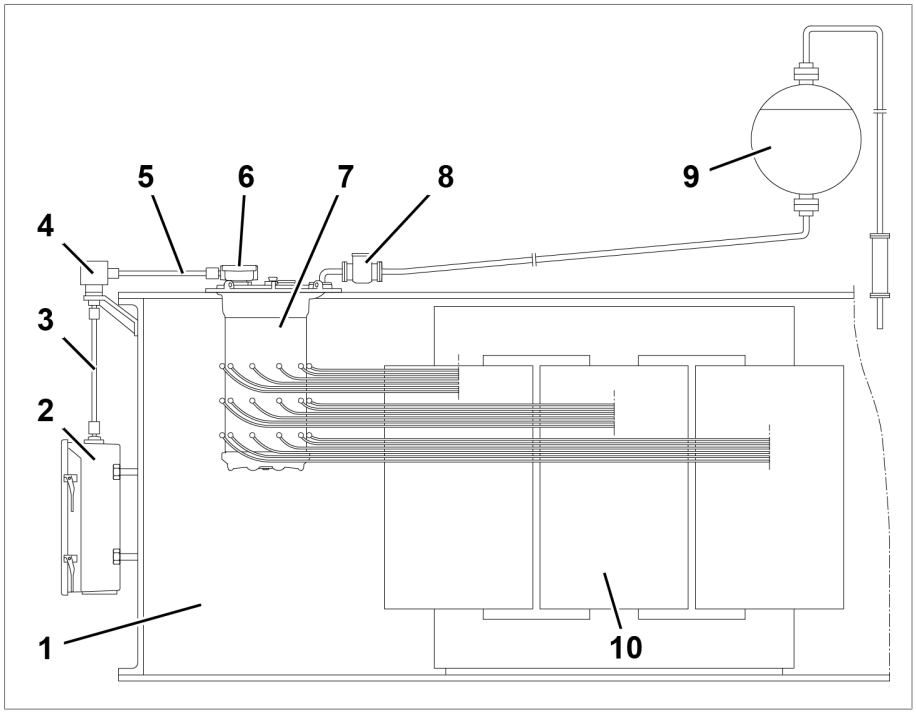

Figure 1: System overview of on-load tap-changer transformer

1	Transformer tank	6	Upper gear unit
2	Motor-drive unit	7	On-load tap-changer
3	Vertical drive shaft	8	RS protective relay
4	Bevel gear	9	Oil conservator
5	Horizontal drive shaft	10	Active part of the transformer

3.2.2 Setup/versions

The on-load tap-changer is designed in tubular form and combines the functions of a diverter switch and tap selector. The insulating fluid is separated from the transformer oil by means of the cylindrical pressure-proof oil compartment.

The on-load tap-changer is secured to the transformer cover by the on-load tap-changer head. If required, the on-load tap-changer is equipped with a change-over selector.

The on-load tap-changer and motor-drive unit are shipped in the adjustment position.

The design and designation of the most important on-load tap-changer components are shown in the installation drawings in the appendix.

For the number of maximum operating positions of the on-load tap-changer, refer to the technical data.

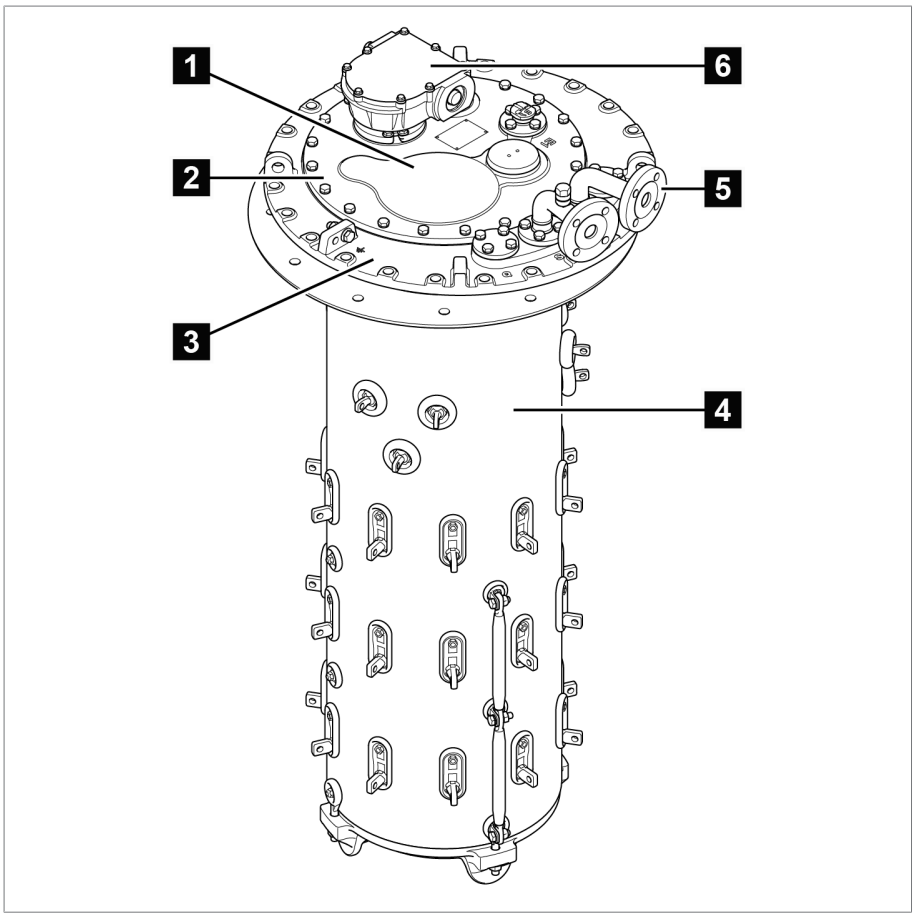

Figure 2: OILTAP® V on-load tap-changer

1	Rupture disk	2	On-load tap-changer head cover
3	On-load tap-changer head	4	Oil compartment
5	Pipe bend	6	Upper gear unit

3.2.2.1 Pipe connections

The on-load tap-changer head features 4 pipe connections for different purposes.

Depending on the order, some or all of these pipe connections are fitted with pipe bends ex factory. All pipe bends can be freely swiveled once the pressure ring is loosened.

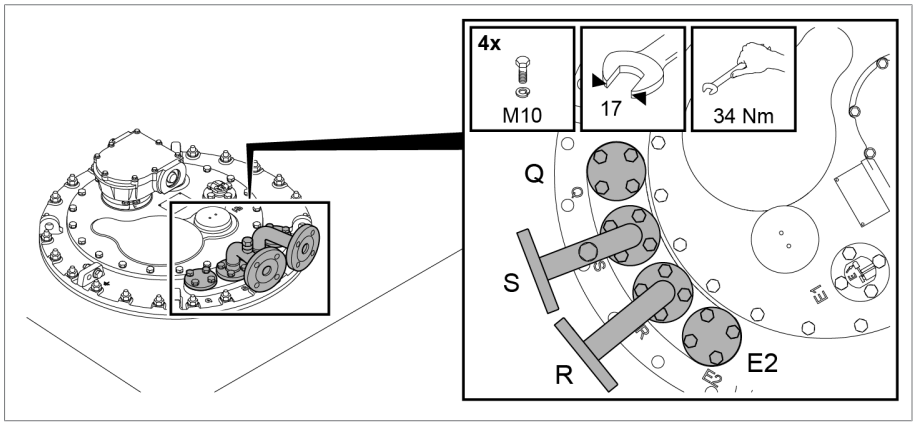

Figure 3: Pipe connections with pipe bends

Pipe connection Q

Pipe connection Q is closed with a blank cover and is intended for connecting the oil filter unit.

The functions of the R and Q pipe connections can be interchanged.

Pipe connection S

The pipe bend on pipe connection S features a vent screw and can be connected to a pipe that ends with a drain valve on the side of the transformer tank at operating height. If the on-load tap-changer is fitted with an oil suction pipe, the on-load tap-changer can be completely emptied via pipe connection S.

Pipe connection R

Pipe connection R is intended for attachment of the protective relay and connection of the on-load tap-changer oil conservator and can be interchanged with pipe connection Q.

Pipe connection E2

Pipe connection E2 is sealed off with a blank cover. It leads into the oil tank of the transformer, directly under the on-load tap-changer head and can be connected to a collective pipe for the Buchholz relay, if necessary. This pipe connection serves a further purpose, namely to equalize the pressure between the transformer tank and oil compartment of the on-load tap-changer, which is necessary for drying, filling with insulating fluid and transportation of the transformer.

3.2.3 Name plate

The name plate is on the on-load tap-changer head cover.

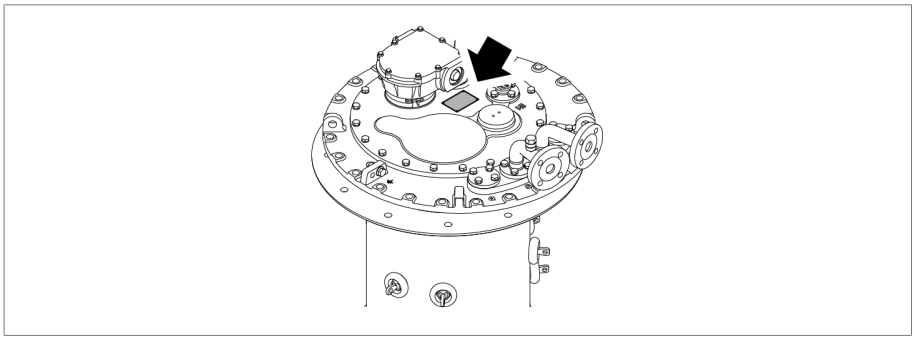

Figure 4: Position of name plate

3.2.4 Protective devices

Note that special operating conditions that can affect the protection concept apply in the case of special applications, such as hermetic transformers or the use of alternative insulating fluids. Always consult the transformer manufacturer and Maschinenfabrik Reinhausen GmbH regarding special applications. The special conditions are provided with the order confirmation.

Below you will find the product description for protective devices for standard applications that are included in the scope of delivery or available as options:

3.2.4.1 Protective relay

3.2.4.1.1 Function description

The protective relay is looped into the circuit breaker tripping circuit, thus protecting the on-load tap-changer and transformer in the event of a fault within the on-load tap-changer oil compartment. It is tripped when the specified speed of flow from the on-load tap-changer head to the oil conservator is exceeded due to a fault. The flowing insulating fluid actuates the flap valve which tips over into position OFF. The contact in the dry-reed magnetic switch is thereby actuated, the circuit breakers are tripped, and the transformer is de-energized.

The protective relay is a component of an on-load tap-changer filled with insulating fluid and its properties conform to the respective applicable version of IEC publication 60214-1.

Diverter switch operations at rated switching capacity or at permissible overload will not cause the protective relay to trip.

The protective relay responds to flow, not to gas accumulated in the protective relay. It is not necessary to bleed the protective relay when filling the transformer with insulating fluid. Gas accumulation in the protective relay is normal.

3.2.4.1.2 Design/versions

Front view

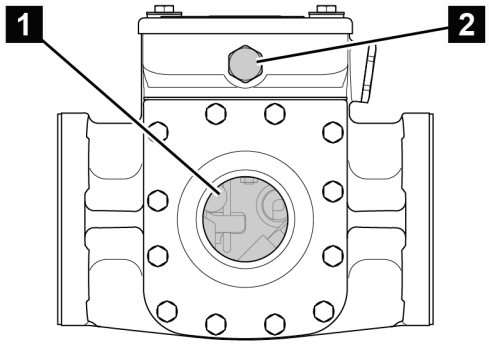

Figure 5: Protective relay RS 2001

1	Inspection window	2	Pressure equalization element

Rear view

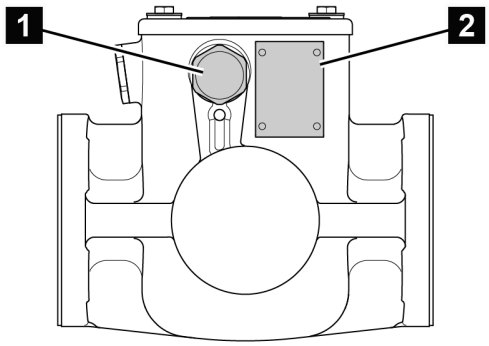

Figure 6: Protective relay RS 2001

1	Dummy plug	2	Nameplate

The protective relay RS 2001/R has an extra inspection window on the rear.

View from above

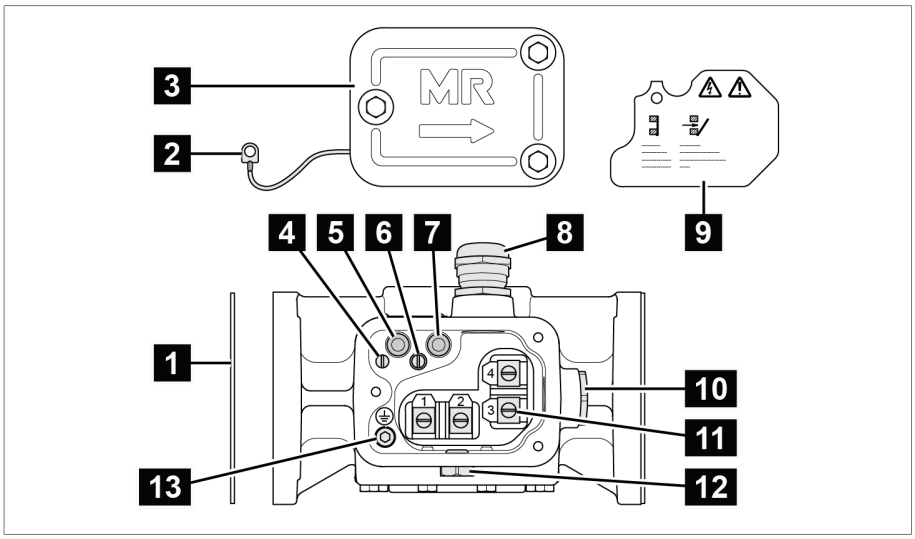

Figure 7: Protective relay RS 2001

1	Gasket	2	Potential tie-in
3	Terminal box cover	4	Slotted head screw for potential tie-in
5	OPERATION (reset) test button	6	Slotted head screw for protective cover
7	OFF (test tripping) test button	8	Cable gland
9	Protective cover	10	Dummy plug
11	Connection terminal	12	Pressure equalization element
13	Cylinder head screw for protective conductor connection		

The protective relays RS 2003 and RS 2004 have a 1/2"-14NPT adapter in place of the cable gland.

3.2.4.1.3 Nameplate

The nameplate is on the back of the protective relay.

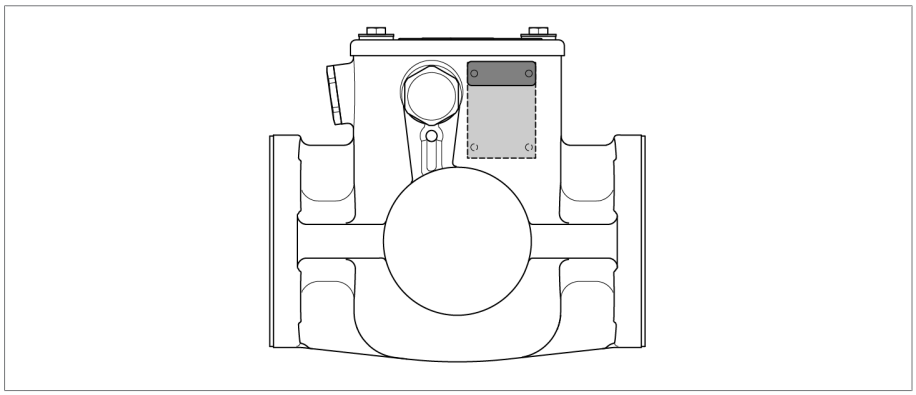

Figure 8: Nameplate

3.2.4.2 Pressure monitoring device DW

3.2.4.2.1 Function description

The DW 2000 pressure monitoring device protects the on-load tap-changer from impermissible pressure increases, contributing to the safety of the transformer. The pressure monitoring device is installed on the outside of the on-load tap-changer and is tripped by impermissible static and dynamic pressures in the on-load tap-changer oil compartment.

The pressure monitoring device uses a concept where a corrugated tube acts as a barometer together with a spring providing counter force. This assembly is mechanically linked to the sensor on the snap-action switch.

The pressure increase activates the sensor on the snap-action switch, which flips into the OFF position. This triggers the circuit breaker and de-energizes the transformer. The sensor on the snap-action switch has to be reset to the initial position by hand after tripping.

Low-energy interference does not cause the pressure monitoring device to trip since the required tripping pressure is not reached. The tripping pressure is set at the factory and prevented from being changed.

The pressure monitoring device responds to large pressure increases faster than the RS 2001 protective relay. The RS 2001 protective relay is part of the standard MR protection system and comes as standard.

Additional use of a pressure-operated relay also requires installation of the provided RS 2001 protective relay.

The features and characteristics of the pressure monitoring device comply with the respective applicable version of IEC publication 60214-1.

Diverter switch operations at the rated switching capacity or permitted overload do not cause the pressure-operated relay to trip.

The pressure-operated relay responds to a pressure change and not to gas accumulation under the pressure-operated relay. Gas accumulation under the pressure-operated relay is normal.

3.2.4.2.2 Design/versions

This chapter gives you an overview of the structure of the pressure monitoring device.

The pressure monitoring device consists of a pressure measuring element and an adjacent snap-action switch.

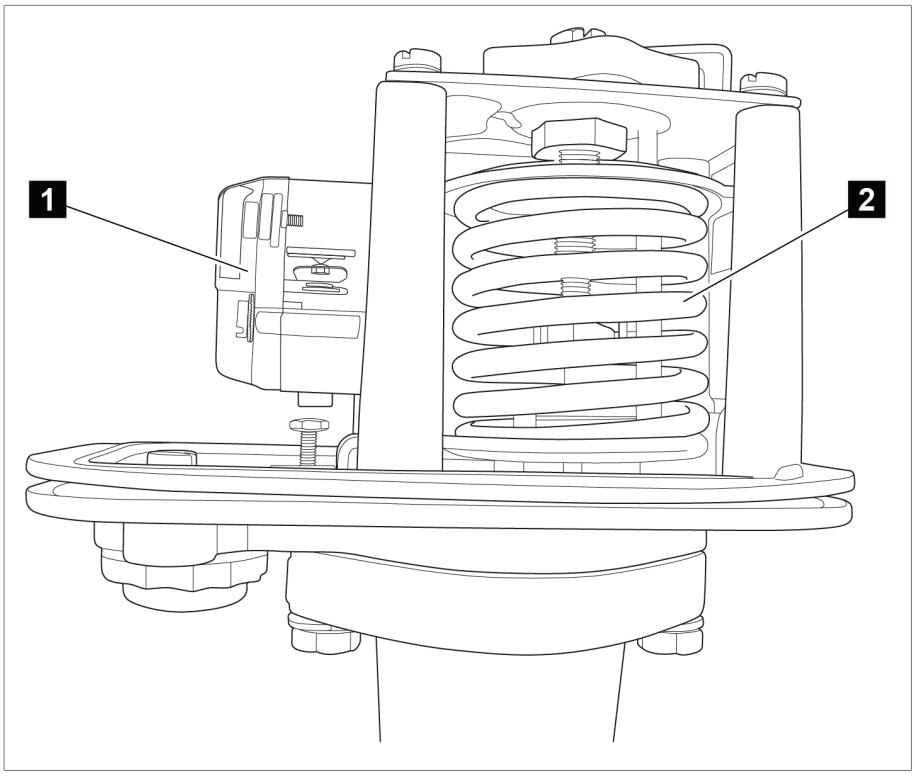

Figure 9: Snap-action switch and pressure measuring element

1	Snap-action switch	2	Pressure measuring element

The snap-action switch has a normally open switch and normally closed switch with snap action.

During operation, the snap-action switch and pressure measuring element are protected by a cover cap. Ventilation is provided on the top of the pressure monitoring device.

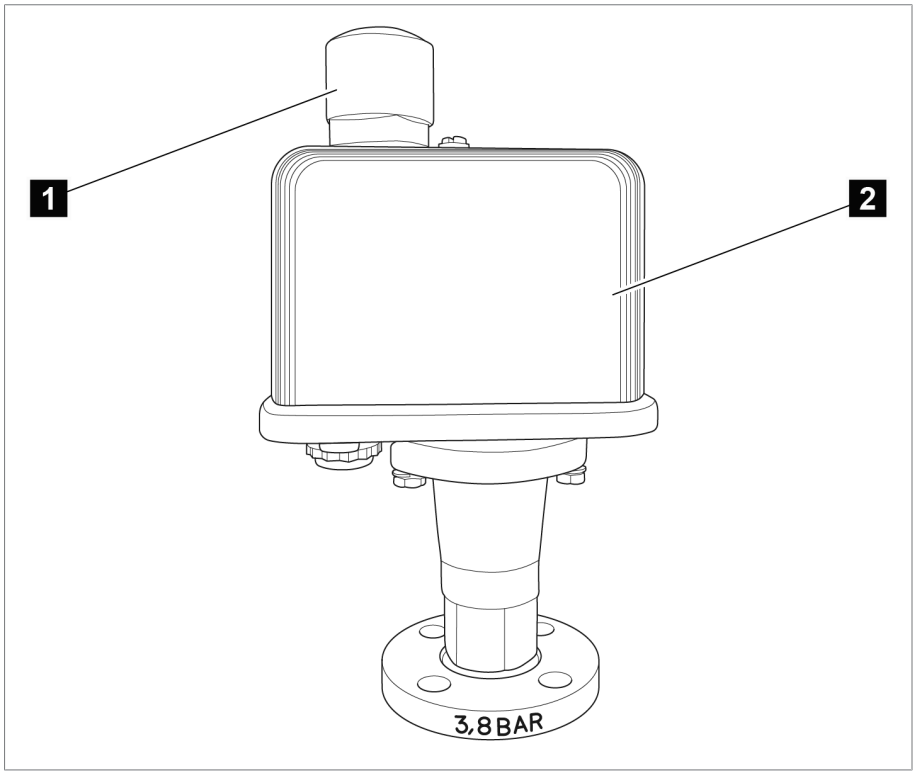

Figure 10: Pressure monitoring device with cover cap and ventilation

1	Ventilation	2	Cover cap

There are two variants of the pressure monitoring device:

- DW 2000 for vertical installation
- DW 2000 for horizontal installation

The housing and cover cap of the pressure monitoring device consist of lightweight, corrosion-resistant metal.

3.2.4.3 Rupture disk

The rupture disk is a pressure relief device without signaling contact in accordance with IEC 60214-1 and is located in the on-load tap-changer head cover.

The rupture disk responds to a defined overpressure in the oil compartment of the on-load tap-changer.

3.2.4.4 Pressure relief device MPreC®

On request, MR will supply a pre-fitted MPreC® pressure relief device in place of the rupture disk. This device responds to a defined overpressure in the oil compartment of the on-load tap-changer.

The on-load tap-changer therefore meets the requirements of IEC 60214-1 regarding pressure relief devices.

3.2.4.5 Temperature monitoring

The temperature monitoring system monitors the temperature of the insulating fluid in the oil compartment of the on-load tap-changer.

3.3 Drive shaft

3.3.1 Function description

The drive shaft is the mechanical connection between motor-drive and on-load tap-changer head / de-energized tap-changer head.

The bevel gear changes the direction from vertical to horizontal.

Accordingly, the vertical drive shaft has to be mounted between drive and bevel gear, and the horizontal drive shaft between bevel gear and on-load tap-changer or de-energized tap-changer.

3.3.2 Design/versions

The drive shaft consists of a square tube and is coupled at each end by two coupling brackets and one coupling bolt to the driving or driven shaft end of the device to be connected.

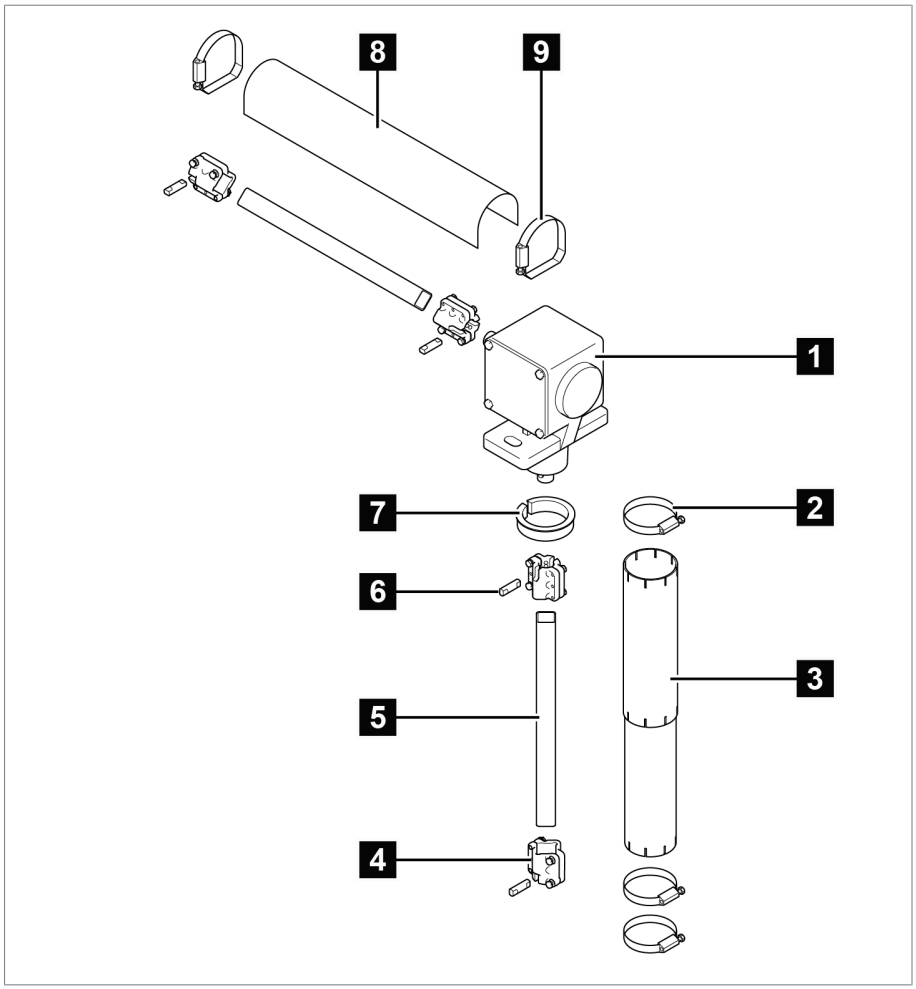

Figure 11: Components of the drive shaft

1	Bevel gear	2	Hose clip
3	Telescopic protective tube	4	Coupling bracket
5	Square tube	6	Coupling bolt
7	Adapter ring	8	Protective cover
9	Hose clip		

3.3.2.1 Drive shaft without cardan joint and without insulator

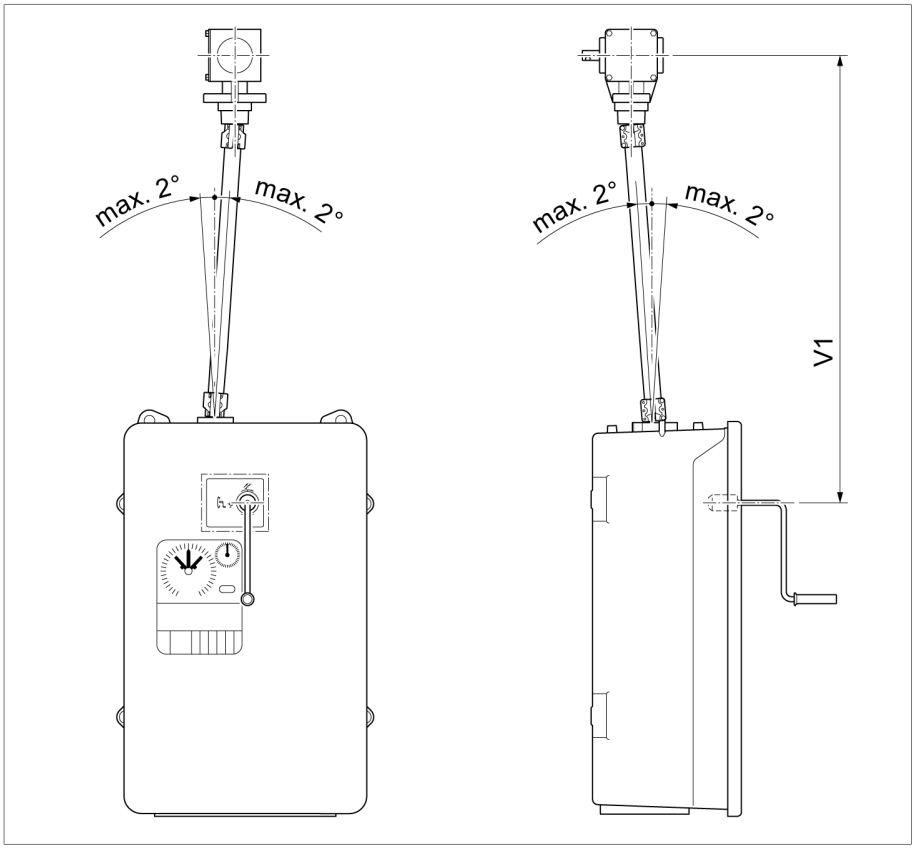

Figure 12: Drive shaft without cardan joint and without insulator (= standard version)

Configuration	V 1 min	Intermediate bearing
Middle of hand crank – middle of bevel gear (maximum permissible axial offset 2°)	536 mm	When the maximum value of 2472 mm is exceeded, it is necessary to use an intermediate bearing. V 1 ≤ 2472 mm (without intermediate bearing) V 1 > 2472 mm (with intermediate bearing)

3.3.2.2 Drive shaft without cardan joint and with insulator

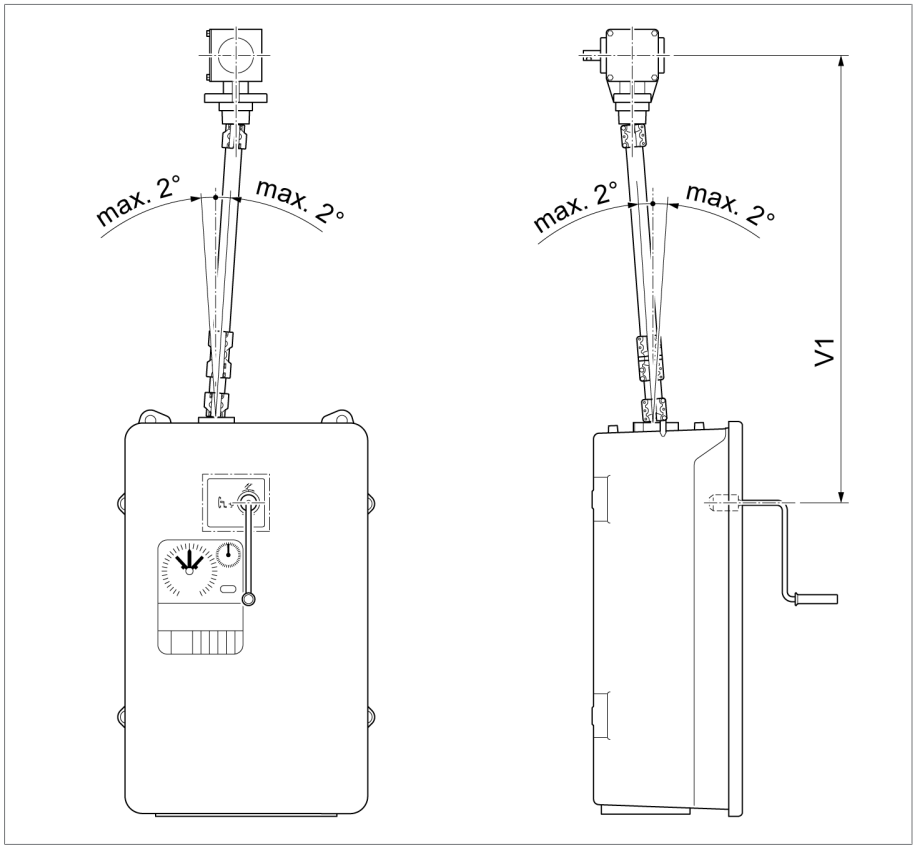

Figure 13: Drive shaft without cardan joint and with insulator (= special model)

Configuration	V 1 min	Intermediate bearing
Middle of hand crank – middle of bevel gear (maximum permissible axial offset 2°)	706 mm	When the maximum value of 2472 mm is exceeded, it is necessary to use an intermediate bearing. V 1 ≤ 2472 mm (without intermediate bearing) V 1 > 2472 mm (with intermediate bearing)

3.3.2.3 Drive shaft with cardan joint and without insulator

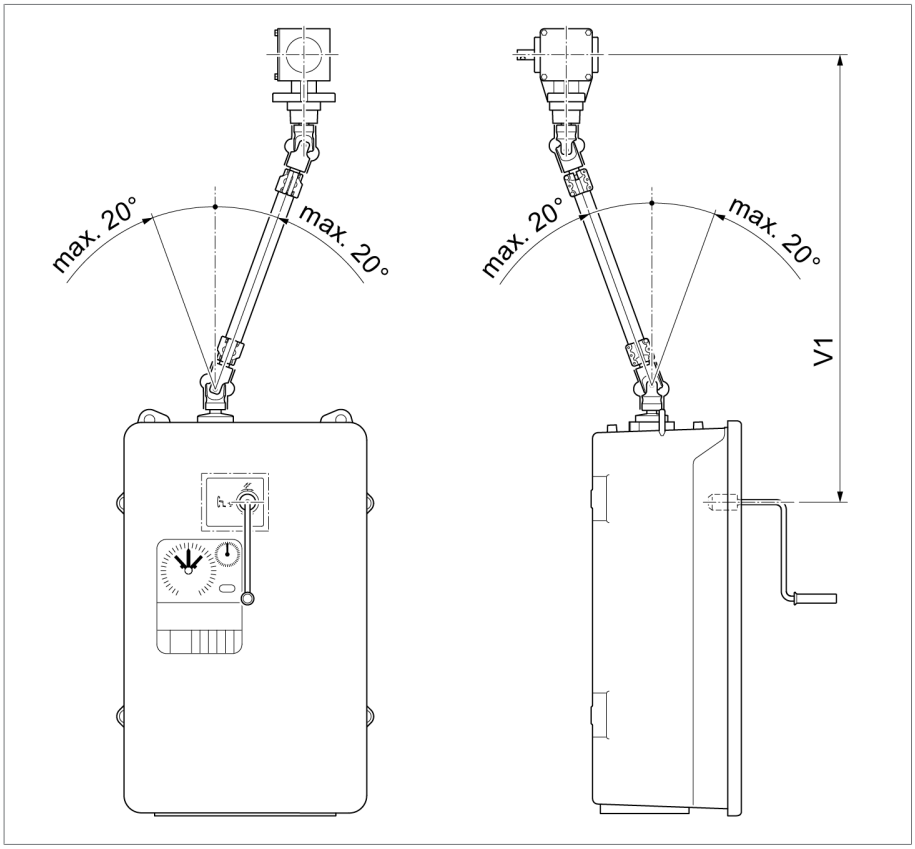

Figure 14: Drive shaft with cardan joint and without insulator (= special model)

Configuration	V 1 min [mm]	Intermediate bearing for [mm]
Middle of hand crank – middle of bevel gear (maximum permissible axial offset 20°)	798	V 1 > 2564

3.3.2.4 Drive shaft with cardan joint and with insulator

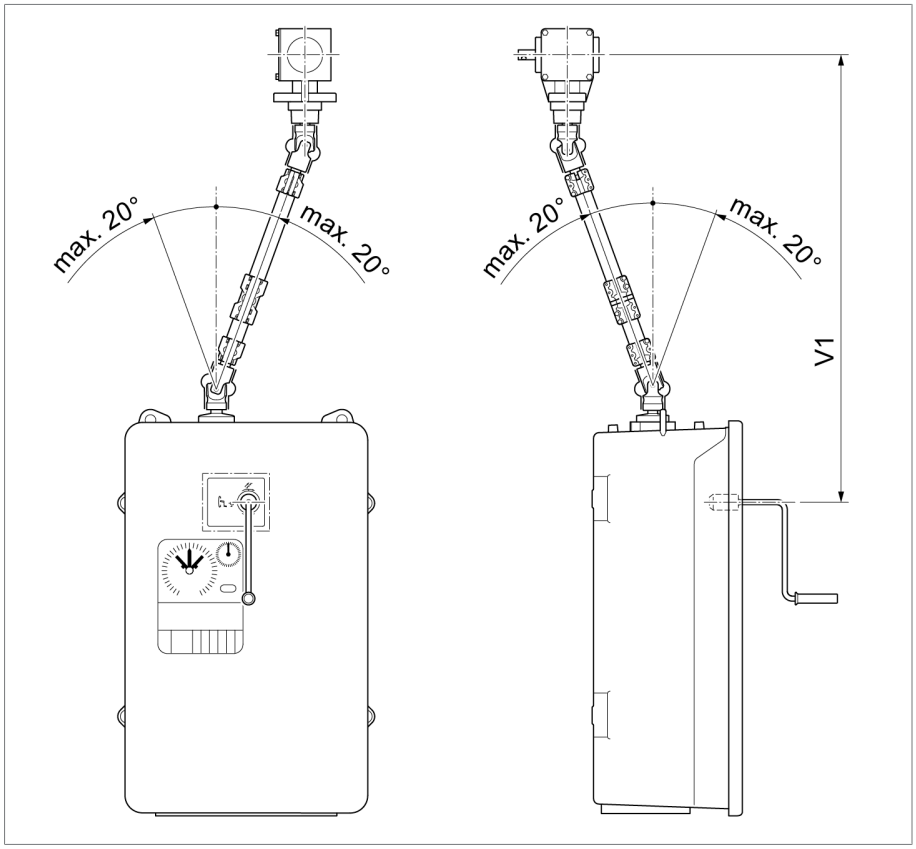

Figure 15: Drive shaft with cardan joint and with insulator (= special model)

Configuration	V 1 min [mm]	Intermediate bearing for [mm]
Middle of hand crank – middle of bevel gear (maximum permissible axial offset 20°)	978	V 1 > 2772

3.3.3 Identification plate

The identification plate is on the telescopic protective tube.

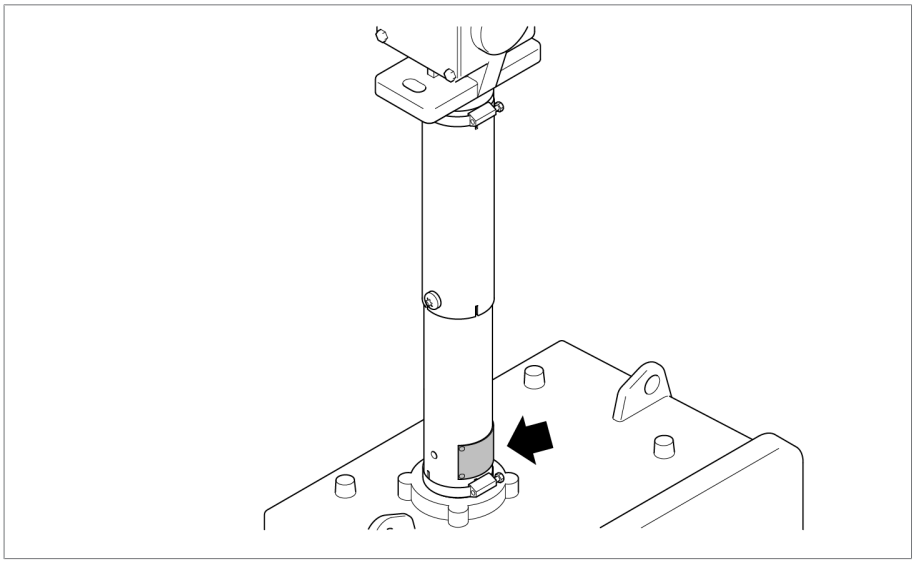

Figure 16: Position of the identification plate

3.4 OF 100 Oil Filter Unit

The purpose of the OF 100 oil filter unit is to clean the on-load tap-changer's insulating fluid with the paper filter insert and to clean and dry the fluid with the combined filter insert.

For on-load tap-changers where the number of tap-change operations per year is higher than 15,000, we recommend the use of the OF 100 oil filter unit with paper filter insert. This can extend the intervals between maintenance.

For more information, consult the MR operating instructions "OF 100 oil filter unit".

When using the OILTAP® V III 200 D and V III 350 D on-load tap-changers in countries with a tropical or subtropical climate where the relative humidity is extremely high and the temperature in the oil conservator usually falls below the dew point every day, we recommend you use an OF 100 oil filter unit with combined filter insert to maintain the dielectric properties of the insulating fluid. If, under such circumstances, the highest operating voltage between the phases of the on-load tap-changer is > 55 kV, you must use the OF 100 oil filter unit with combined filter insert.

4 Packaging, transport and storage

4.1 Packaging

The products are sometimes supplied with sealed packaging and sometimes in a dry state, depending on requirements.

Sealed packaging surrounds the packaged goods with plastic foil on all sides.

Products that have also been dried are identified by a yellow label on the sealed packaging. In the dry state, delivery is also possible in a transport container.

The information in the following sections should be applied as appropriate.

4.1.1 Suitability

NOTICE **Property damage due to incorrectly stacked crates!**

Stacking the crates incorrectly can lead to damage to the packaged goods.

- ► The outer marking on the packaging states if, for example, the on-load tap-changer or selector has been packed upright. Never stack these crates.
- ► General rule: Do not stack crates above a height of 1.5 m.
- ► For other crates: Only stack up to 2 equally sized crates on top of one another.

The packaging is suitable to ensure undamaged and fully functional means of transportation in compliance with local transportation laws and regulations.

The packaged goods are packed in a sturdy crate. This crate ensures that, when in the intended transportation position, the packaged goods are stabilized to prevent impermissible changes in position, and that none of the parts touch the loading surface of the means of transport or touch the ground after unloading.

Sealed packaging surrounds the packaged goods with plastic foil on all sides. The packaged goods are protected from humidity using a desiccant. The plastic foil was bonded after the desiccant is added.

4.1.2 Markings

The packaging bears a signature with instructions for safe transport and correct storage. The following symbols apply to the shipment of non-hazardous goods. Adherence to these symbols is mandatory.

	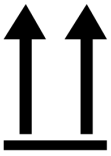			
Protect against moisture	Top	Fragile	Attach lifting gear here	Center of mass

Table 3: Shipping pictograms

4.2 Transportation, receipt and handling of shipments

⚠ WARNING

Danger of death and damage to property!

Danger of death and damage to property due to tipping or falling load.

- ▶ Only transport the crate when closed.
- ▶ Do not remove the securing material used in the crate during transport.
- ▶ If the product is delivered on a pallet, secure it sufficiently.
- ▶ Only trained and authorized persons may select the sling gear and secure the load.
- ▶ Do not walk under the hanging load.
- ▶ Use means of transport and lifting gear with a sufficient carrying capacity in accordance with the weight stated on the delivery slip.

In addition to oscillation stress, jolts must also be expected during transportation. In order to prevent possible damage, avoid dropping, tipping, knocking over and colliding with the product.

If a crate tips over, falls from a certain height (e.g. when slings tear) or is subject to an unbroken fall, damage must be expected regardless of the weight.

Every delivered shipment must be checked for the following by the recipient before acceptance (acknowledgment of receipt):

- Completeness based on the delivery slip
- External damage of any type

The checks must take place after unloading when the crate or transport container can be accessed from all sides.

Visible damage If external transport damage is found upon receipt of the shipment, proceed as follows:

- Immediately record the identified transport damage in the shipping documents and have this countersigned by the carrier.
- In the event of severe damage, total loss or high damage costs, immediately notify the manufacturer and the relevant insurance company.
- After identifying damage, do not modify the condition of the shipment further and retain the packaging material until an inspection decision has been made by the transport company or the insurance company.
- Record the details of the damage immediately on site together with the carrier involved. This is essential for any claim for damages.
- Photograph damage to packaging and packaged goods. This also applies to signs of corrosion on the packaged goods due to moisture inside the packaging (rain, snow, condensation).
- ***NOTICE!*** If the product is delivered in sealed packaging, inspect this immediately. If the sealed packaging is damaged, do not under any circumstances install or commission the packaged goods. Either re-dry the dried packaged goods as per the operating instructions, or contact the manufacturer to agree on how to proceed. Failure to do so may result in damage to the packaged goods.
- Identify the damaged parts.

Hidden damage When damages are not determined until unpacking after receipt of the shipment (hidden damage), proceed as follows:

- Make the party responsible for the damage liable as soon as possible by telephone and in writing, and prepare a damage report.
- Observe the time periods applicable to such actions in the respective country. Inquire about these in good time.

With hidden damage, it is very hard to make the transportation company (or other responsible party) liable. Any insurance claims for such damages can only be successful if relevant provisions are expressly included in the insurance terms and conditions.

4.3 Storage of shipments

Packaged goods dried by Maschinenfabrik Reinhausen

Upon receipt of the shipment, immediately remove the packaged goods dried by Maschinenfabrik Reinhausen from the sealed packaging and store air-tight in dry insulating fluid until used if the packaged goods were not supplied in insulating fluid.

Non-dried packaged goods

Non-dried packaged goods but with a functional sealed packaging can be stored outdoors when the following conditions are complied with.

When selecting and setting up the storage location, ensure the following:

- Protect stored goods against moisture (flooding, water from melting snow and ice), dirt, pests such as rats, mice, termites and so on, and against unauthorized access.
- Store the crates on timber beams and planks as a protection against rising damp and for better ventilation.
- Ensure sufficient carrying capacity of the ground.
- Keep entrance paths free.
- Check stored goods at regular intervals. Also take appropriate action after storms, heavy rain or snow and so on.

Protect the packaging foil from direct sunlight so that it does not disintegrate under the influence of UV rays, which would cause the packaging to lose its sealing function.

If the product is installed more than 6 months after delivery, suitable measures must be taken without delay. The following measures can be used:

- Correctly regenerate the drying agent and restore the sealed packaging.
- Unpack the packed goods and store in a suitable storage space (well ventilated, as dust-free as possible, humidity < 50% where possible).

4.4 Unpacking shipments and checking for transportation damages

- ***NOTICE!*** Transport the packaged crate to the place where installation will take place. Do not open the sealed packaging until just before installation. If this is not done, damage to the packaged goods may occur due to ineffectively sealed packaging.
- **⚠ WARNING!** When unpacking, check the condition of the packaged goods.Secure packaged goods in an upright crate from tipping out. If this is not done, the packaged goods may be damaged and serious injuries may result.
- Check completeness of supplementary parts on the basis of the delivery slip.

5 Mounting

This chapter describes how to install the on-load tap-changer in a transformer, how to dry the on-load tap-changer as well as how to mount the protective devices and drive components.

5.1 Preparatory work

Perform the work stated below before installing the on-load tap-changer in the transformer.

5.1.1 Fitting mounting flange on transformer cover

A mounting flange is required for fitting the on-load tap-changer head on the transformer cover. This can be supplied as an option or can be produced by the customer. Mounting flanges made by the customer must comply with the installation drawings in the appendix.

► **NOTICE!** Fit mounting flange on transformer cover (pressure tight).Ensure that the sealing face makes complete contact and is not damaged.

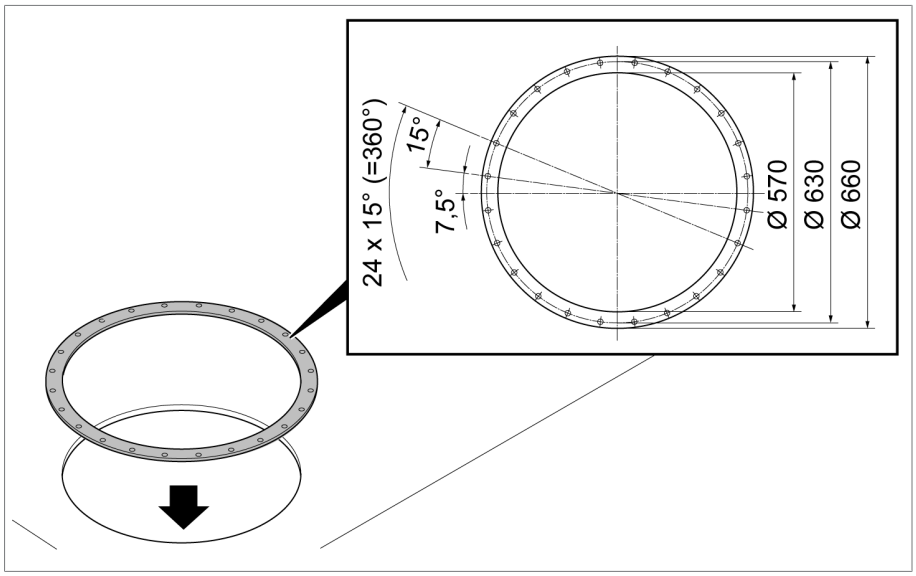

Figure 17: Mounting flange

5.1.2 Fitting stud bolts on mounting flange

To attach the stud bolts to the mounting flange, use a tracing template. This can be provided upon request free of charge for the initial installation of the on-load tap-changer.

1. Place tracing template on mounting flange and use the four markings to align.

2. Fit stud bolts on mounting flange.

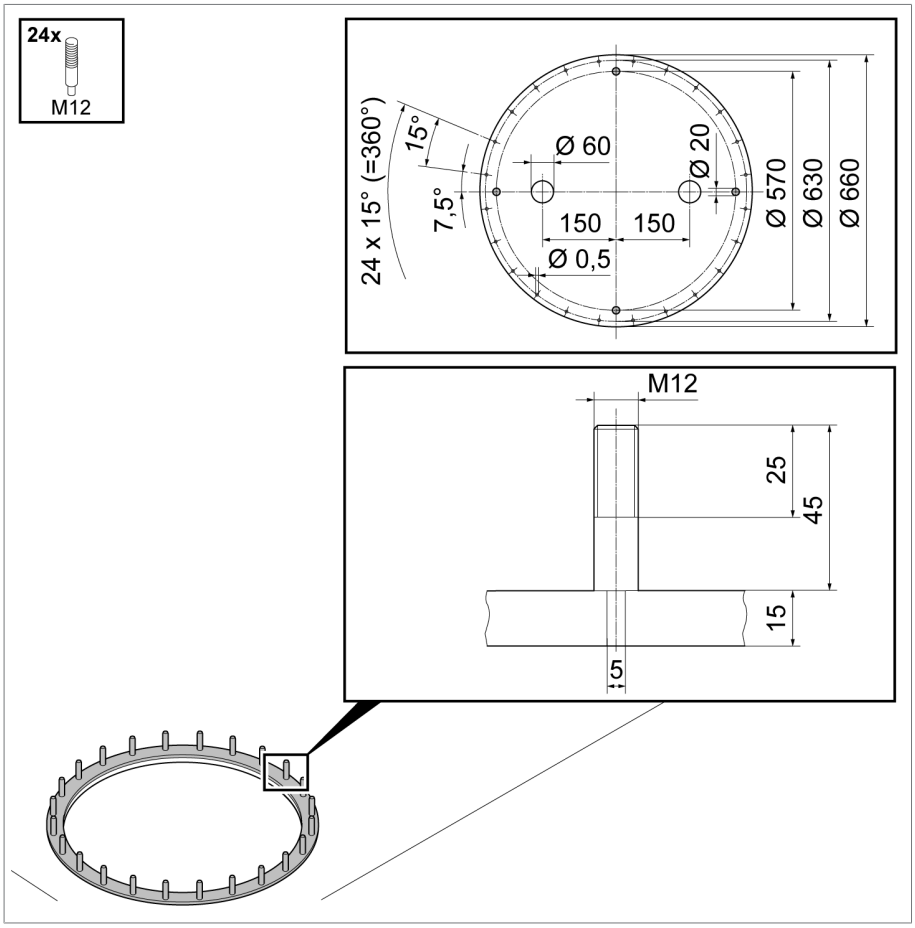

Figure 18: Stud bolt

5.2 Installing the on-load tap-changer in the transformer (standard version)

Perform the work stated below in order to install the on-load tap-changer in the transformer (standard version).

5.2.1 Fastening on-load tap-changer on transformer cover

1. **⚠ WARNING!** Place on-load tap-changer on a level surface and secure it against tipping. An unstably positioned on-load tap-changer may tip, resulting in serious injuries and damage.
2. Remove red-colored packaging material and transport material from on-load tap-changer.
3. Ensure that the on-load tap-changer is in the adjustment position. The adjustment position is indicated in the on-load tap-changer connection diagram included in delivery.

4. **NOTICE!** Unsuitable gaskets lead to leakage of insulating fluid and therefore to damage to the on-load tap-changer. Clean the sealing surfaces on the mounting flange and on-load tap-changer head. Place a gasket **1** suitable for the insulating fluid used on the mounting flange **2**.

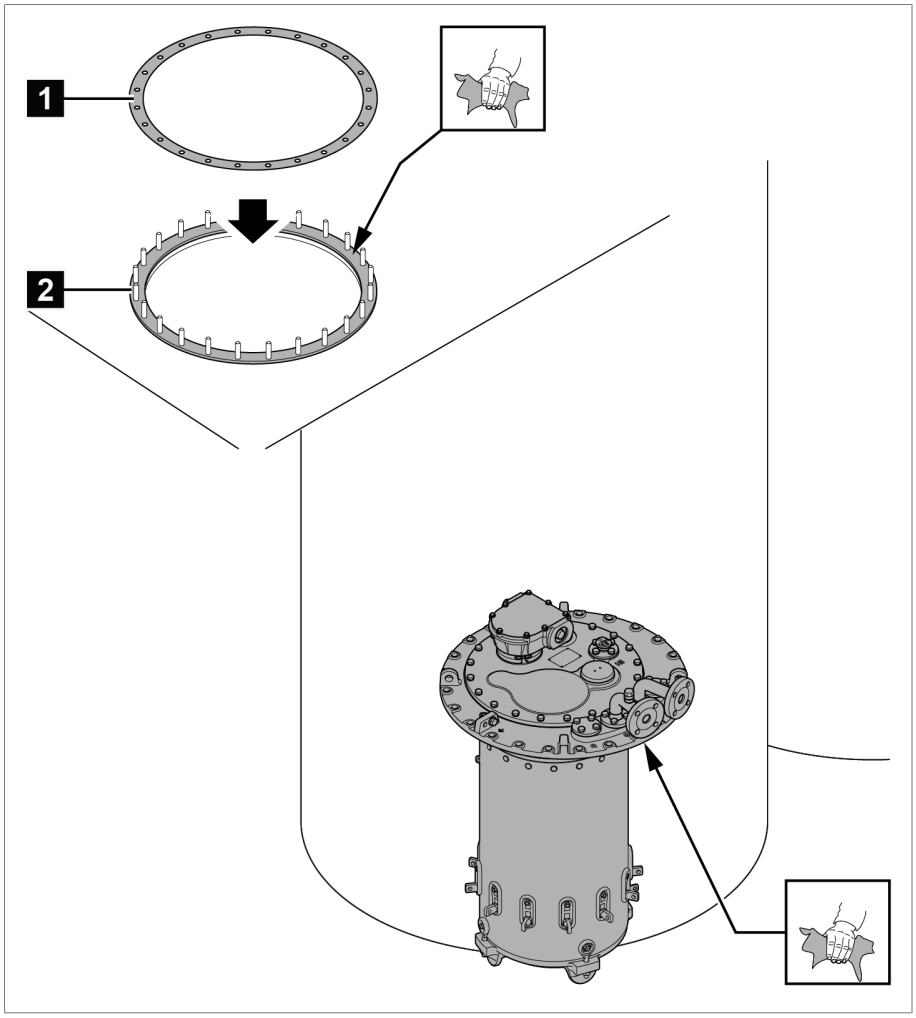

Figure 19: Cleaning the sealing surfaces

5. **NOTICE!** Lift the on-load tap-changer by hooking up the on-load tap-changer head and carefully lower it into the cover opening of the transformer. When lowering, take care not to damage the connection contacts.

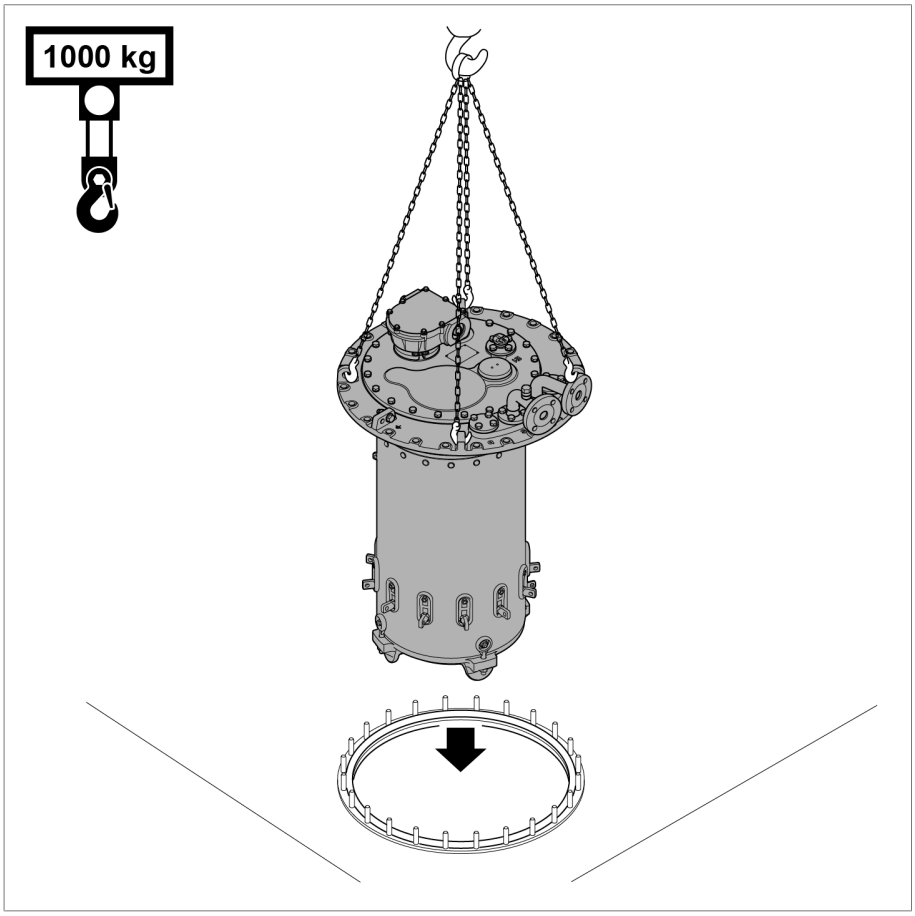

Figure 20: Lowering on-load tap-changer

6. Check that the on-load tap-changer head is mounted in the position specified by the design.

7. Screw the on-load tap-changer head to the mounting flange. The tightening torque depends on the screw connection elements used.

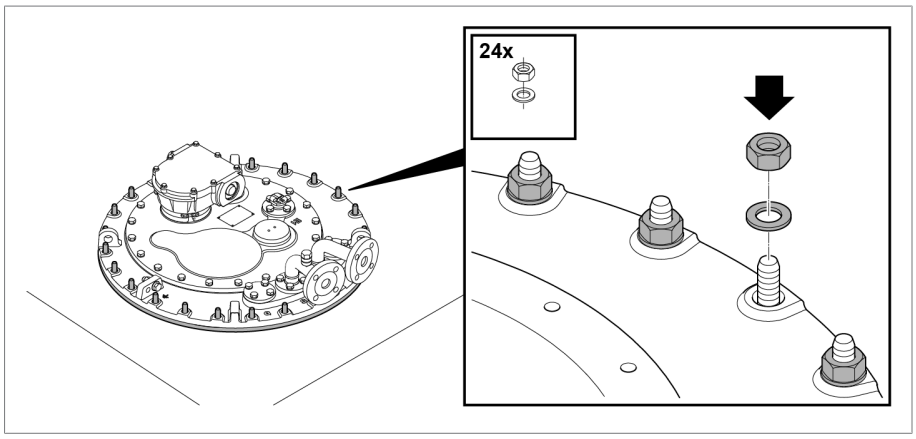

Figure 21: On-load tap-changer head

5.2.2 Connecting the tap winding and on-load tap-changer take-off lead

NOTICE

Damage to the on-load tap-changer!

Connecting leads which place mechanical strain on the on-load tap-changer will damage the on-load tap-changer!

► Establish and secure connections with care.

► Do not twist connection contacts.

► Connect connecting leads without warping or deforming.

► If necessary use an expansion loop for connecting leads.

1. Connect the tap winding and on-load tap-changer take-off lead in accordance with the connection diagram included with the delivery.
2. If connection leads have to cross the open surface of the oil compartment/change-over selector, there must be a clearance of 50 mm between the connecting leads and the surface of the oil compartment/change-over selector.

The designations of the on-load tap-changer's connection contacts are shown in the connection diagram. The connection contacts are provided with horizontal or vertical through-holes (see appendix):

- OILTAP® V 350: 11 mm diameter for M10 screws
- OILTAP® V 200: 9 mm diameter for M8 screws (M8 screws on tap selector, M10 screws on change-over selector and take-off terminals)

5.2.3 Performing transformer ratio test before drying

NOTICE

Damage to the on-load tap-changer!

Damage to the on-load tap-changer due to transformer ratio test being incorrectly performed.

- ► Do not perform more than 250 tap-change operations on the on-load tap-changer. If more than 250 tap-change operations are to be performed, completely fill the oil compartment with insulating fluid and lubricate sliding surfaces of contacts on the selector and selector gear with insulating fluid.
- ► Only switch the on-load tap-changer from one operating position to the next via the upper gear unit. You can use a short tube (diameter 25 mm) with screwed-in coupling bolt (diameter 12 mm) with a hand wheel or crank for this, for example. When using a drill, do not exceed a maximum speed of 250 rpm.
- ► Always check the operating position reached through the inspection window in the on-load tap-changer head cover. Never overshoot the end positions, which are indicated in the connection diagram supplied with the delivery.
- ► For multiple-column applications with a shared drive, link all on-load tap-changer heads to one another using the horizontal drive shaft parts.

When actuating the change-over selector, a higher torque is required.

To perform the transformer ratio test, proceed as follows:

1. Switch the on-load tap-changer into the desired operating position. The diverter switch operation can be heard distinctly.
2. **NOTICE!** An incomplete tap-change operation may damage the on-load tap-changer. After operating the diverter switch, continue to crank the drive shaft of the upper gear unit for 2.5 revolutions in the same direction in order to correctly complete the tap-change operation.
3. Perform the transformer ratio test.
4. Repeat the transformer ratio test in all operating positions.
5. Once the transformer ratio test is complete, return on-load tap-changer to its adjustment position (see supplied connection diagram of the on-load tap-changer).

After the transformer ratio test, open the kerosene drain plug in the oil compartment if the on-load tap-changer is to be dried with kerosene in the transformer tank. After drying, the diverter switch insert must be removed, the kerosene drain plug in the oil compartment closed and the diverter switch insert refitted.

5.2.4 Performing DC resistance measurement on transformer

Note the measurement scenarios listed below and the associated maximum measured currents when performing DC resistance measurement on the transformer.

The measured DC current is normally restricted to 10% of the rated current of the measured transformer winding in order to prevent the winding from overheating.

Perform the DC resistance measurement in various on-load tap-changer operating positions. You need to distinguish here whether the measured current is interrupted when changing operating position or not.

Status of oil compartment	Without interruption in measured current	With interruption (measured current = 0 A before change in operating position)
Oil compartment empty	Maximum 10 A DC	Maximum 50 A DC
Oil compartment filled with insulating fluid	Maximum 50 A DC	Maximum 50 A DC

Table 4: Maximum permitted measured currents when performing DC resistance measurement on transformer

5.2.5 Drying on-load tap-changer in autoclave

NOTICE

Damage to the on-load tap-changer!

Moisture in the oil compartment reduces the dielectric strength of the insulating fluid and thus leads to damage to the on-load tap-changer.

► Within 10 hours of drying, seal off oil compartment with on-load tap-changer head cover.

Dry on-load tap-changer in accordance with the following instructions to ensure the dielectric values assured by MR for the on-load tap-changer.

If drying in an autoclave, the following methods are possible:

- Vacuum drying
- Vapor-phase drying

As an alternative to drying the on-load tap-changer in an autoclave, it can also be dried in the transformer tank.

5.2.5.1 Vacuum-drying in the autoclave

To vacuum-dry the on-load tap-changer in the autoclave, proceed as follows.

If you wish to perform another transformer ratio test after drying, proceed as described in the section "Performing transformer ratio test following drying" [► Section 5.2.8, Page 86].

5.2.5.1.1 Moving on-load tap-changer to adjustment position

► Move the on-load tap-changer into the adjustment position (see supplied connection diagram of the on-load tap-changer).

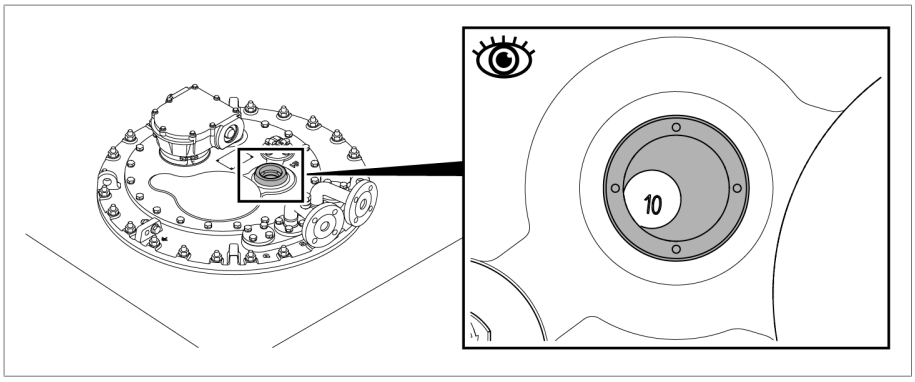

Figure 22: Adjustment position

5.2.5.1.2 Removing on-load tap-changer head cover

⚠ WARNING

Danger of explosion!

Explosive gases under the on-load tap-changer head cover can deflagrate or explode and result in severe injury or death.

► Ensure that there are no ignition sources such as open flames, hot surfaces or sparks (e.g. caused by the build-up of static charge) in the immediate surroundings and that none occur.

► De-energize all auxiliary circuits (for example tap-change supervisory device, pressure relief device, pressure monitoring device) before removing the on-load tap-changer head cover.

► Do not operate any electrical devices during the work (e.g. risk of sparks from impact wrench).

NOTICE

Damage to the on-load tap-changer!

Small parts in the oil compartment may block the diverter switch insert, thereby damaging the on-load tap-changer.

► Ensure that parts do not fall into the oil compartment.

► Check that all small parts are accounted for.

1. Ensure that the inspection window is sealed off with the cover.

2. Remove the screws and washers from the on-load tap-changer head cover.

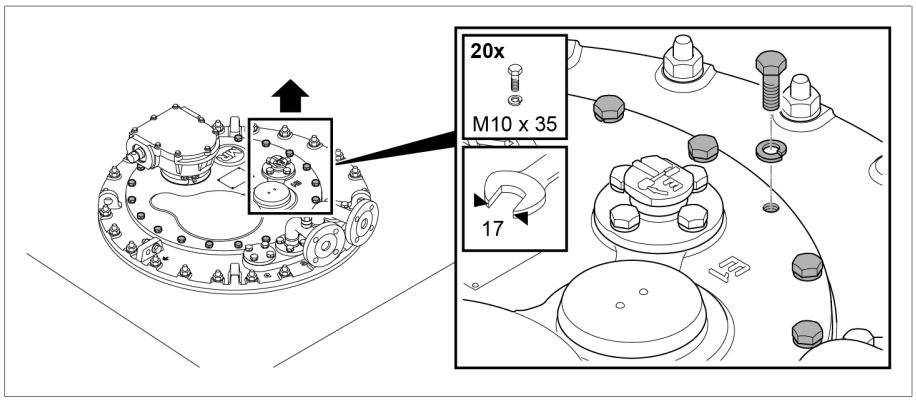

Figure 23: On-load tap-changer head cover

3. Lift off the on-load tap-changer head cover.

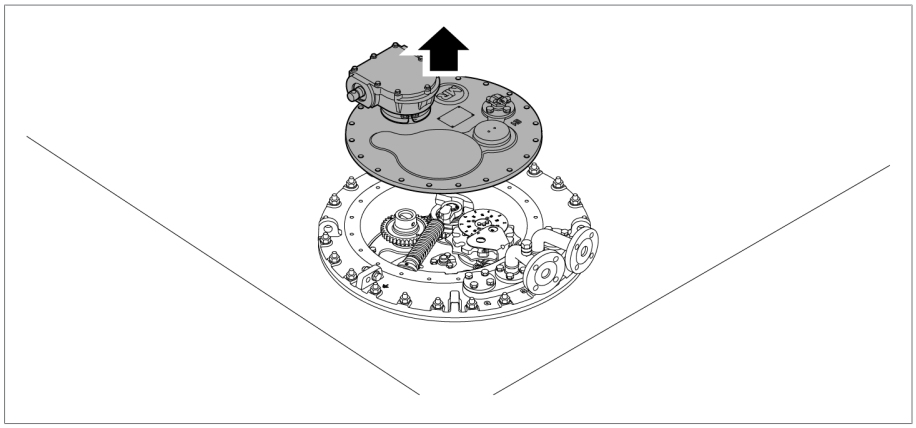

Figure 24: On-load tap-changer head cover

5.2.5.1.3 Drying the on-load tap-changer

NOTICE

Damage to the on-load tap-changer head cover and on-load tap-changer accessories.

Both the on-load tap-changer head cover and the on-load tap-changer accessories will become damaged if they are dried in an autoclave.

► Keep the on-load tap-changer head cover and the following accessories outside the autoclave and never dry them with the on-load tap-changer: motor-drive unit, drive shaft, protective relay, pressure monitoring device, pressure relief device, bevel gear, temperature sensor, oil filter unit.

1. Heat up the on-load tap-changer in air at atmospheric pressure with a temperature increase of approximately 10 °C/h to a final temperature of maximum 110 °C.
2. Pre-dry the on-load tap-changer in circulating air at a maximum temperature of 110 °C for a period of at least 20 hours.

3. Vacuum-dry on-load tap-changer at between 105 °C and maximum 125 °C for at least 50 hours.
4. Residual pressure of no more than 10^{-3} bar.

5.2.5.1.4 Securing on-load tap-changer head cover

NOTICE

Damage to the on-load tap-changer!

A missing or damaged o-ring as well as unclean sealing surfaces lead to insulating fluid escaping and therefore to damage to the on-load tap-changer.

- ► Ensure that the o-ring is positioned untwisted in the on-load tap-changer head cover.
- ► Ensure that the o-ring does not become damaged when mounting the cover.
- ► Ensure that the sealing surfaces on the on-load tap-changer head cover and on-load tap-changer head are clean.

1. Align the on-load tap-changer head cover in such a way that the red triangular markings on the on-load tap-changer head and the on-load tap-changer head cover are aligned.

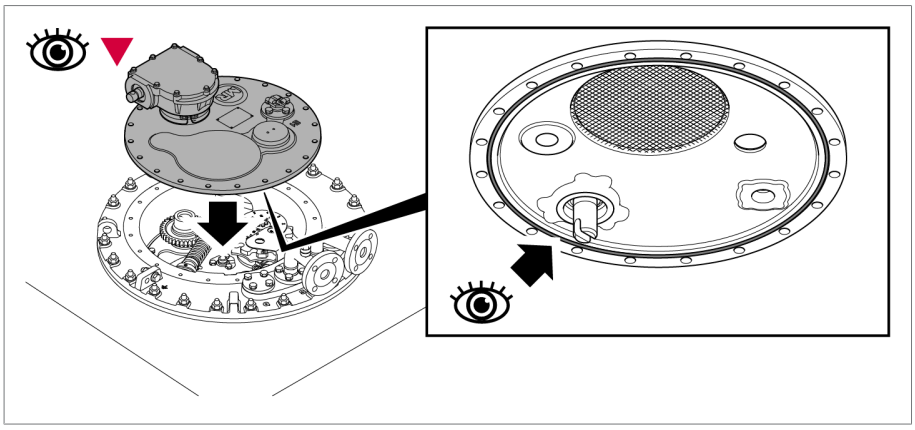

Figure 25: On-load tap-changer head cover

2. Screw the on-load tap-changer head cover onto the on-load tap-changer head.

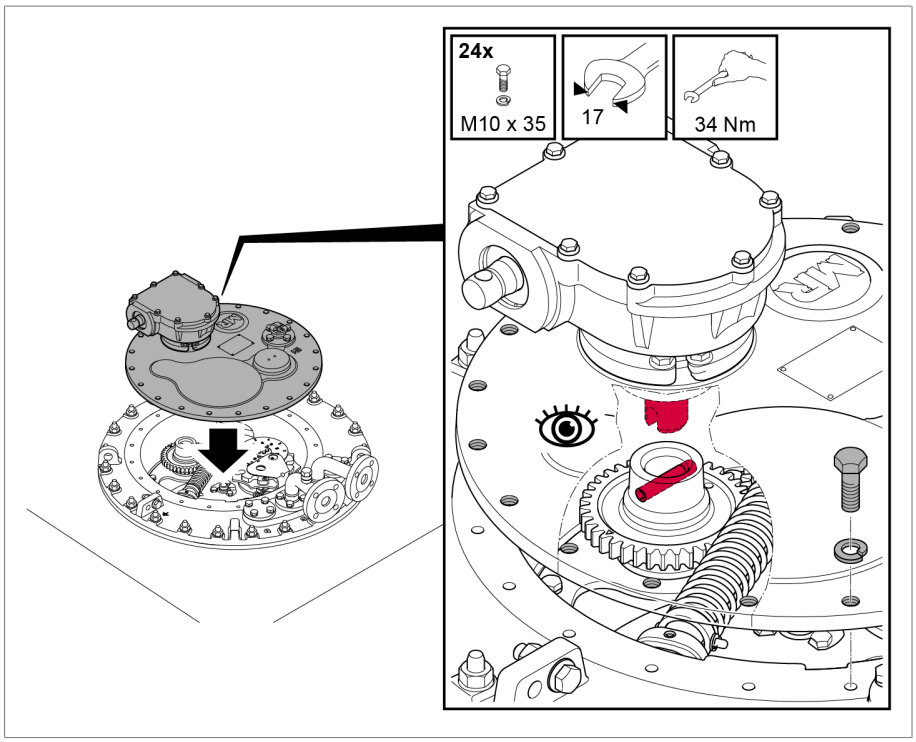

Figure 26: On-load tap-changer head cover

5.2.5.2 Vapor-phase drying in the autoclave

To dry the on-load tap-changer with kerosene in the autoclave, proceed as follows.

If you wish to perform another transformer ratio test after drying, proceed as described in the section "Performing transformer ratio test following drying" [▶Section 5.2.8, Page 86].

5.2.5.2.1 Moving on-load tap-changer to adjustment position

► Move the on-load tap-changer into the adjustment position (see supplied connection diagram of the on-load tap-changer).

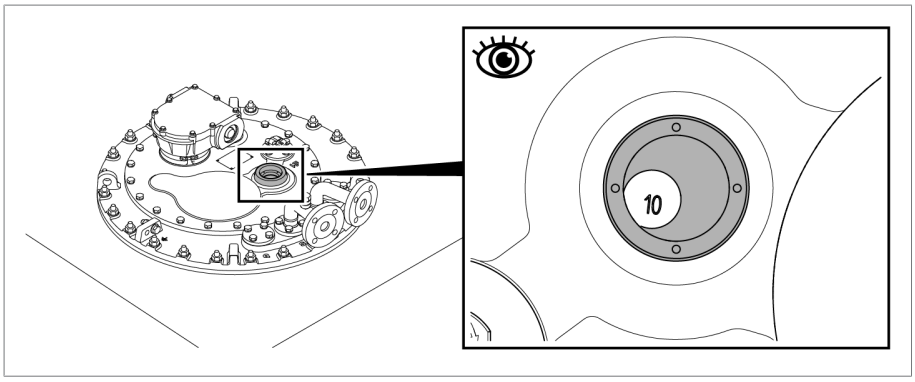

Figure 27: Adjustment position

5.2.5.2.2 Removing on-load tap-changer head cover

⚠ WARNING

Danger of explosion!

Explosive gases under the on-load tap-changer head cover can deflagrate or explode and result in severe injury or death.

► Ensure that there are no ignition sources such as open flames, hot surfaces or sparks (e.g. caused by the build-up of static charge) in the immediate surroundings and that none occur.

► De-energize all auxiliary circuits (for example tap-change supervisory device, pressure relief device, pressure monitoring device) before removing the on-load tap-changer head cover.

► Do not operate any electrical devices during the work (e.g. risk of sparks from impact wrench).

NOTICE

Damage to the on-load tap-changer!

Small parts in the oil compartment may block the diverter switch insert, thereby damaging the on-load tap-changer.

► Ensure that parts do not fall into the oil compartment.

► Check that all small parts are accounted for.

1. Ensure that the inspection window is sealed off with the cover.

2. Remove the screws and washers from the on-load tap-changer head cover.

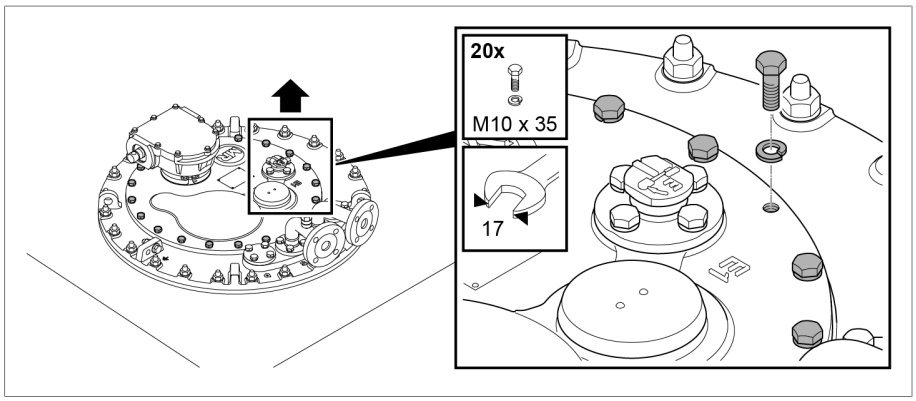

Figure 28: On-load tap-changer head cover

3. Lift off the on-load tap-changer head cover.

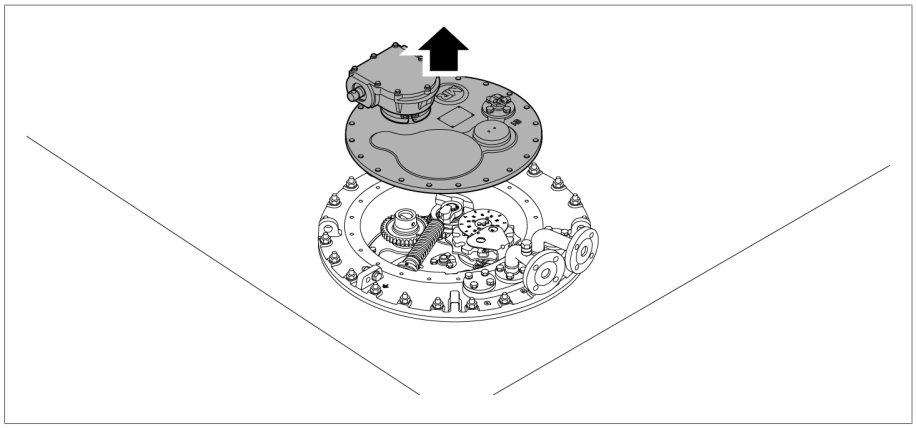

Figure 29: On-load tap-changer head cover

5.2.5.2.3 Opening kerosene drain plug

► **NOTICE!** Unscrew kerosene drain plug between oil compartment base and selector gear clockwise until it starts to offer resistance to turning. Never unscrew the kerosene drain plug all the way.

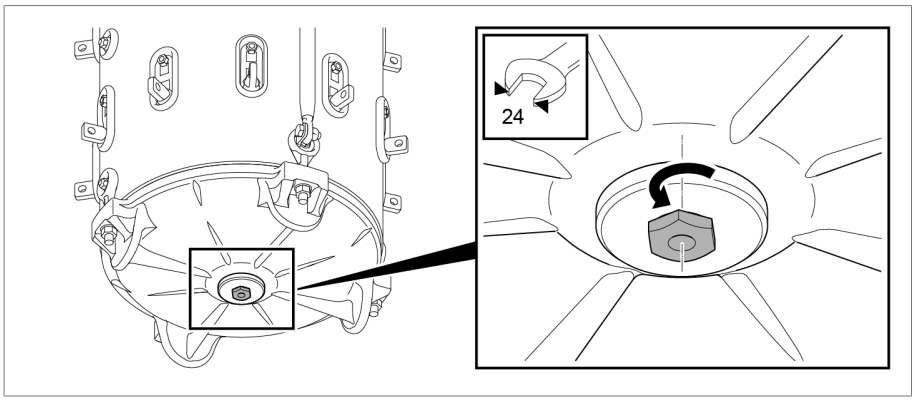

Figure 30: Kerosene drain plug

5.2.5.2.4 Drying the on-load tap-changer

NOTICE

Damage to the on-load tap-changer head cover and on-load tap-changer accessories.

Both the on-load tap-changer head cover and the on-load tap-changer accessories will become damaged if they are dried in an autoclave.

► Keep the on-load tap-changer head cover and the following accessories outside the autoclave and never dry them with the on-load tap-changer: motor-drive unit, drive shaft, protective relay, pressure monitoring device, pressure relief device, bevel gear, temperature sensor, oil filter unit.

1. Supply kerosene vapor at a temperature of around 90°C. Keep this temperature constant for 3 to 4 hours.
2. Increase the kerosene vapor temperature by approx. 10°C/hour to the desired final temperature of max. 125°C at the on-load tap-changer.
3. Vacuum-dry on-load tap-changer at between 105°C and maximum 125°C for at least 50 hours.
4. Residual pressure of no more than 10^{-3} bar.

5.2.5.2.5 Closing kerosene drain plug

► **NOTICE!** Close kerosene drain plug (tightening torque 39 Nm). An open kerosene drain plug leads to insulating fluid escaping from the oil compartment and therefore to damage to the on-load tap-changer and transformer.

5.2.5.2.6 Securing on-load tap-changer head cover

NOTICE

Damage to the on-load tap-changer!

A missing or damaged o-ring as well as unclean sealing surfaces lead to insulating fluid escaping and therefore to damage to the on-load tap-changer.

- ► Ensure that the o-ring is positioned untwisted in the on-load tap-changer head cover.
- ► Ensure that the o-ring does not become damaged when mounting the cover.
- ► Ensure that the sealing surfaces on the on-load tap-changer head cover and on-load tap-changer head are clean.

1. Align the on-load tap-changer head cover in such a way that the red triangular markings on the on-load tap-changer head and the on-load tap-changer head cover are aligned.

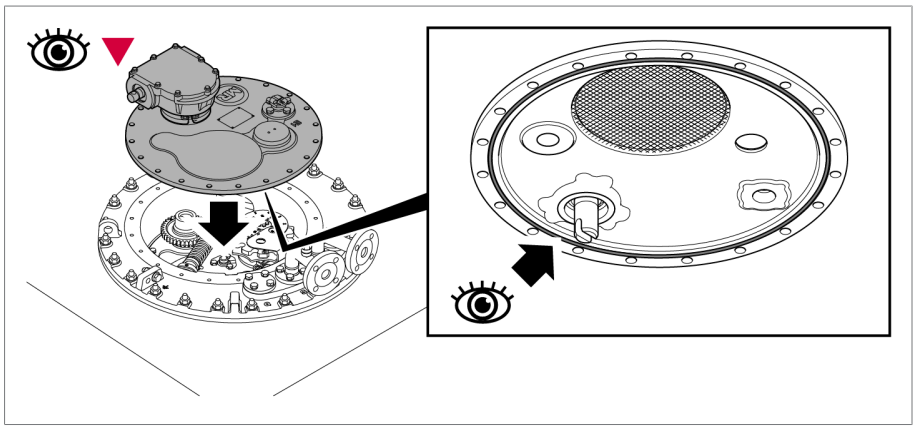

Figure 31: On-load tap-changer head cover

2. Screw the on-load tap-changer head cover onto the on-load tap-changer head.

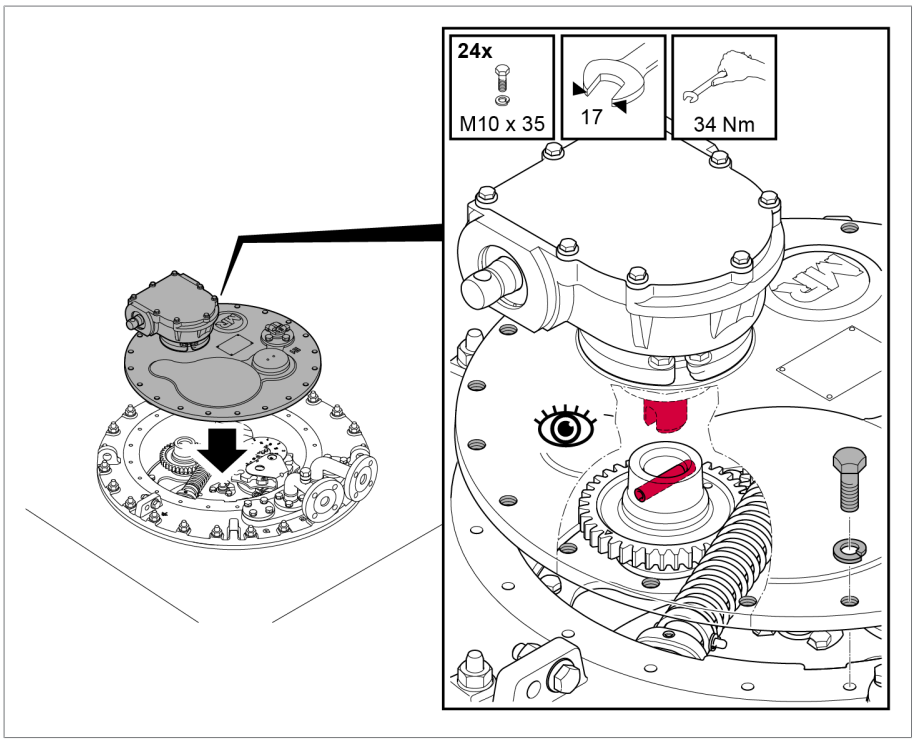

Figure 32: On-load tap-changer head cover

5.2.6 Drying on-load tap-changer in transformer tank

Dry on-load tap-changer in accordance with the following instructions to ensure the dielectric values assured by MR on the on-load tap-changer.

If you want to dry the on-load tap-changer in the transformer tank, fully assemble the transformer first and then undertake drying.

If drying in the transformer tank, the following methods are possible:

- Vacuum-drying
- Vapor-phase drying

As an alternative to drying the on-load tap-changer in the transformer tank, it can also be dried in an autoclave.

5.2.6.1 Vacuum-drying in the transformer tank

Before you start vacuum-drying in the transformer tank, you must place a connecting lead between the corresponding pipe connections and seal off the pipe connections not being used with blank covers.

The on-load tap-changer head cover remains closed during the entire drying process.

1. Establish a connecting lead between either connections E2 and Q or connections E2 and R on the on-load tap-changer head.
2. Seal off unused pipe connections and pipe bends with a suitable blank cover.

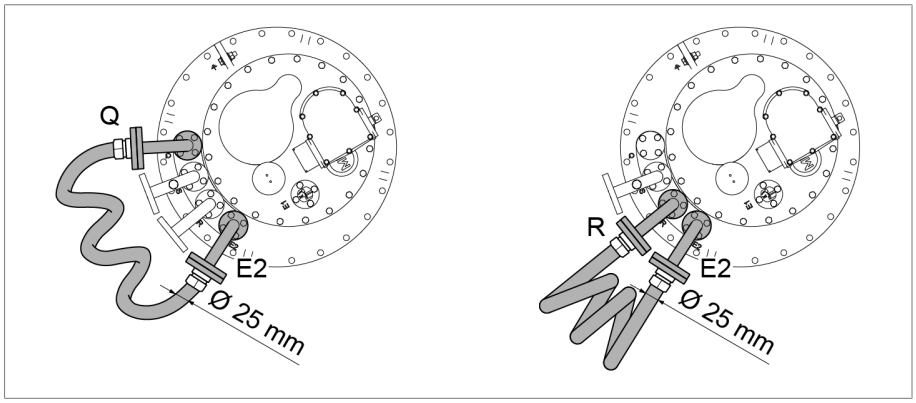

Figure 33: Connecting lead

Vacuum-drying in the transformer tank

1. Heat up the on-load tap-changer in air at atmospheric pressure with a temperature increase of approximately 10 °C/h to a final temperature of maximum 110 °C.
2. Pre-dry the on-load tap-changer in circulating air at a maximum temperature of 110 °C for a period of at least 20 hours.
3. Vacuum-dry on-load tap-changer at between 105 °C and maximum 125 °C for at least 50 hours.
4. Residual pressure of no more than 10^{-3} bar.

5.2.6.2 Vapor-phase drying in the transformer tank

If you have not opened the kerosene drain plug in advance (e.g. after the transformer ratio test), you have to open the kerosene drain plug before the vapor-phase drying process so that the kerosene condensate can drain from the oil compartment.

The kerosene drain plug is located in the oil compartment base and is not accessible with the diverter switch insert installed and the transformer tank closed. For this reason, you first have to remove the diverter switch insert, open the kerosene drain plug, and then install the diverter switch insert again. After the drying process, you have to remove the diverter switch insert again to close the kerosene drain plug.

5.2.6.2.1 Removing diverter switch insert

To remove the diverter switch insert, proceed as follows.

5.2.6.2.1.1 Moving on-load tap-changer to adjustment position

► Move the on-load tap-changer into the adjustment position (see supplied connection diagram of the on-load tap-changer).

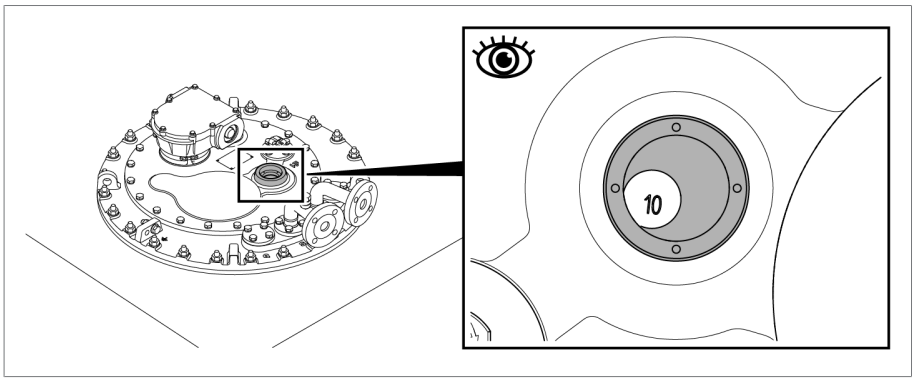

Figure 34: Adjustment position

5.2.6.2.1.2 Removing on-load tap-changer head cover

⚠ WARNING

Danger of explosion!

Explosive gases under the on-load tap-changer head cover can deflagrate or explode and result in severe injury or death.

► Ensure that there are no ignition sources such as open flames, hot surfaces or sparks (e.g. caused by the build-up of static charge) in the immediate surroundings and that none occur.

► De-energize all auxiliary circuits (for example tap-change supervisory device, pressure relief device, pressure monitoring device) before removing the on-load tap-changer head cover.

► Do not operate any electrical devices during the work (e.g. risk of sparks from impact wrench).

NOTICE

Damage to the on-load tap-changer!

Small parts in the oil compartment may block the diverter switch insert, thereby damaging the on-load tap-changer.

► Ensure that parts do not fall into the oil compartment.

► Check that all small parts are accounted for.

1. Ensure that the inspection window is sealed off with the cover.
2. Remove the screws and washers from the on-load tap-changer head cover.

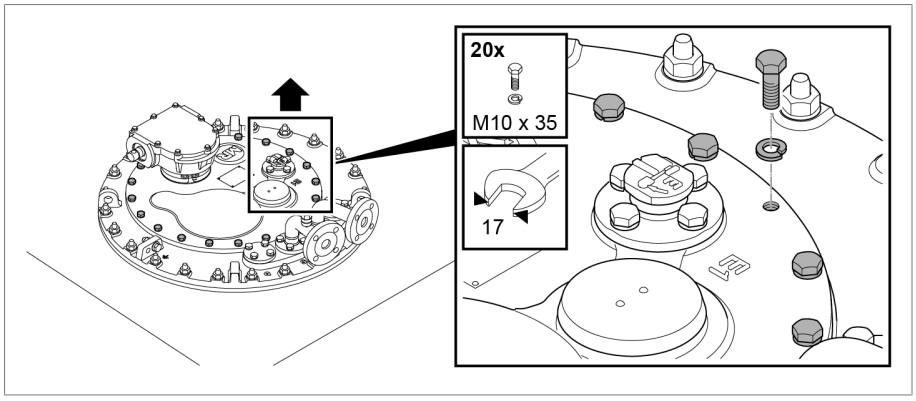

Figure 35: On-load tap-changer head cover

3. Lift off the on-load tap-changer head cover.

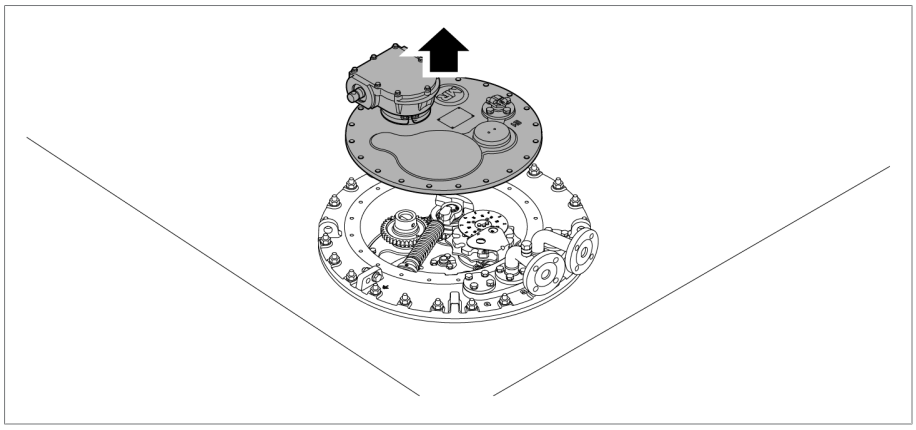

Figure 36: On-load tap-changer head cover

5.2.6.2.1.3 Removing the gear unit

► Remove the gear unit. The gear unit supporting plate is attached to the on-load tap-changer head. Use two hands to lift the gear unit up and out. Securely store all removed parts for reinstallation.

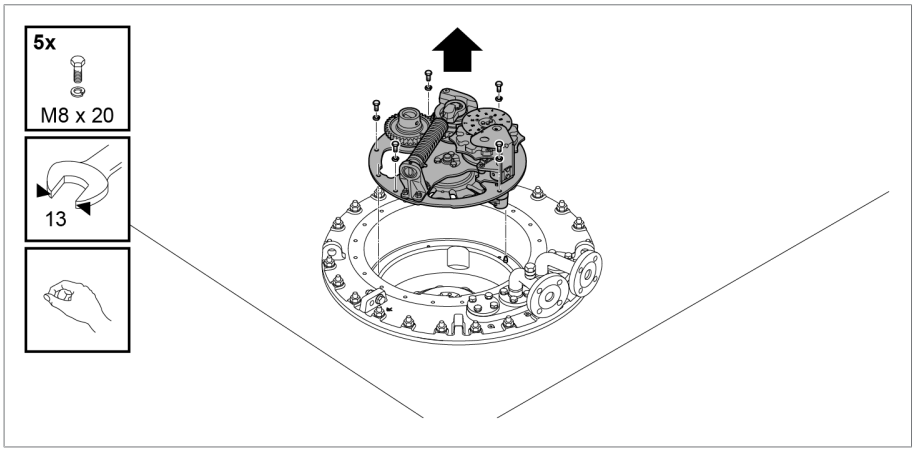

Figure 37: Gear unit supporting plate

5.2.6.2.1.4 Removing the oil suction pipe

The suction pipe centers the on-load tap-changer insert in the bottom bearing at the lower end and has to be pulled out countering the contact pressure.

1. Insert a screwdriver into the top groove of the suction pipe. Lift the suction pipe off upwards using the screwdriver.

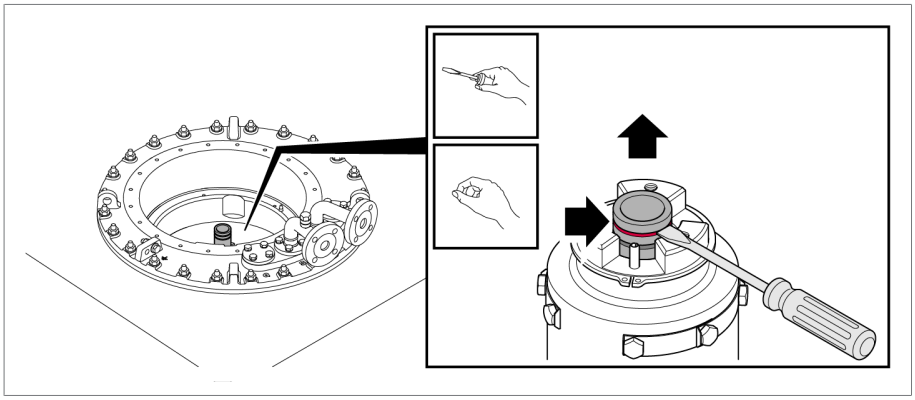

Figure 38: Oil suction pipe

2. Insert the screwdriver into the lower groove and pull the suction pipe up and out vertically by hand.

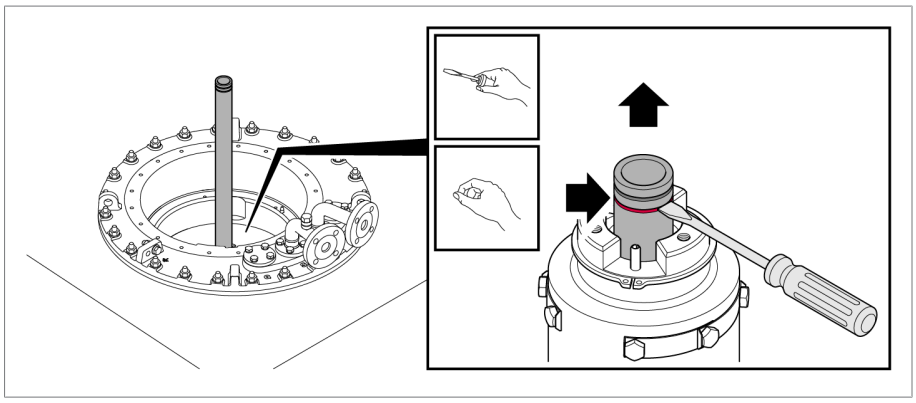

Figure 39: Oil suction pipe

5.2.6.2.1.5 Lifting out the on-load tap-changer insert (OILTAP V without change-over selector)

1. Secure the operating wrench at the coupling of the on-load tap-changer insert.

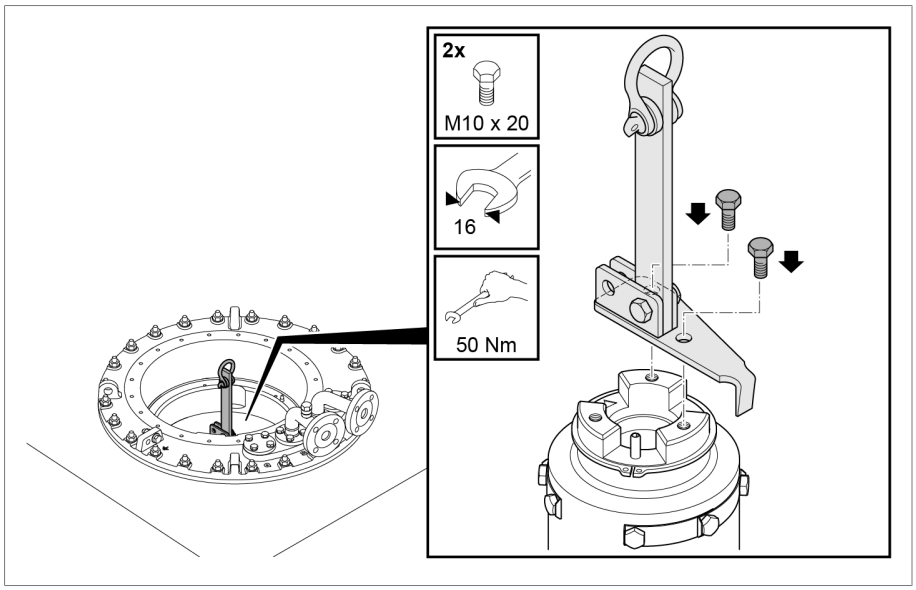

Figure 40: Operating wrench

2. Insert the lifting gear at the operating wrench and slowly lift the on-load tap-changer insert up and out vertically.

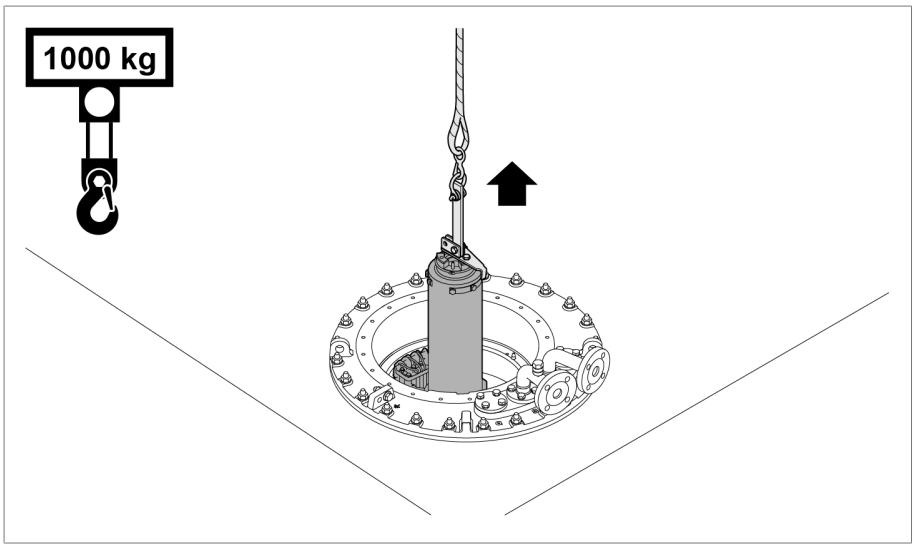

Figure 41: On-load tap-changer insert

3. **⚠ CAUTION!** An unstably positioned on-load tap-changer insert may tip, resulting in injuries and property damage. Place the on-load tap-changer insert on a level surface and secure it against tipping.

5.2.6.2.1.6 Lifting out the on-load tap-changer insert (OILTAP V with change-over selector)

1. Secure the operating wrench at the coupling of the on-load tap-changer insert.

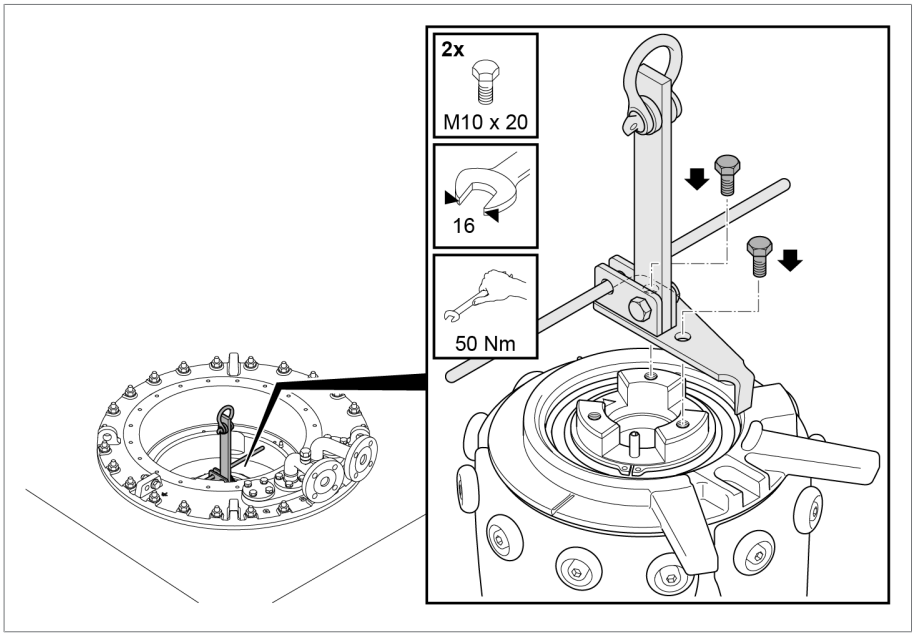

Figure 42: Operating wrench

2. Insert the lug into the notch between the support rails.

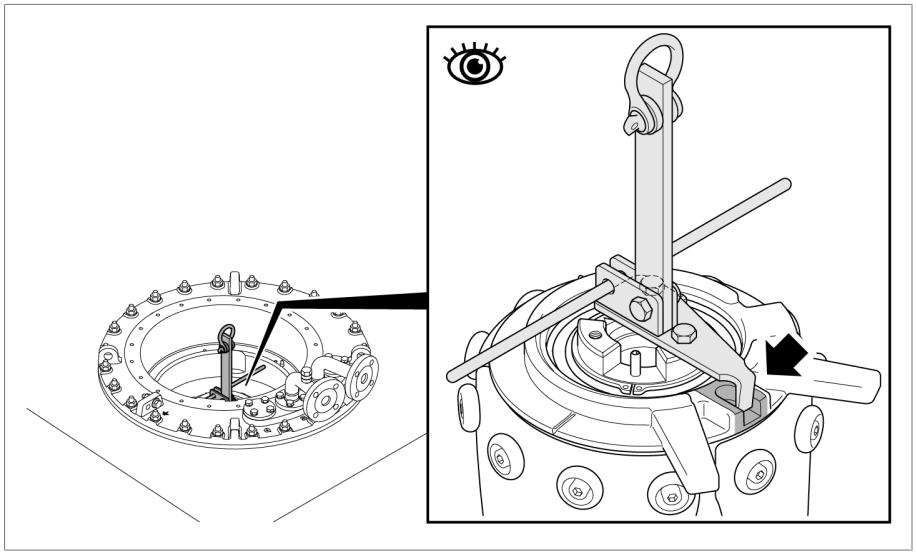

Figure 43: Lug

3. In order to switch off the change-over selector, turn the operating wrench clockwise. The moving contacts of the change-over selector have to be between the fixed contacts of the different phases.

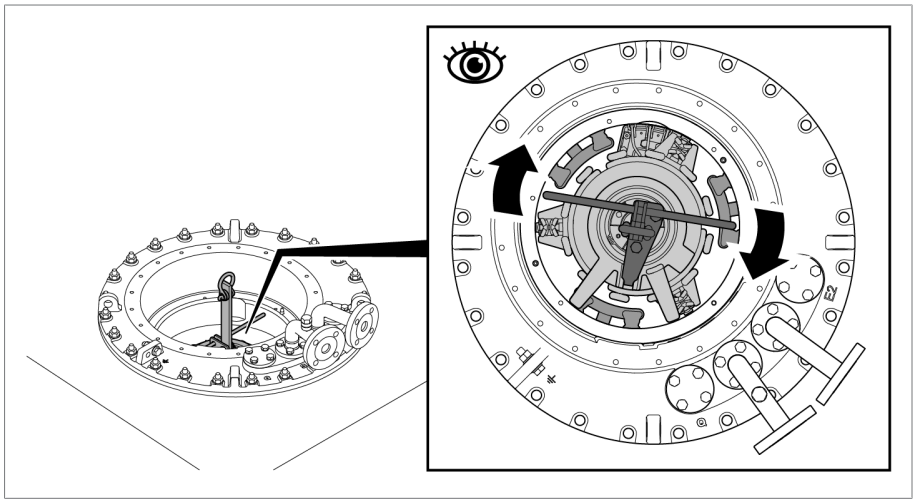

Figure 44: Change-over selector

4. Insert the lifting gear at the operating wrench and slowly lift the on-load tap-changer insert up and out vertically.

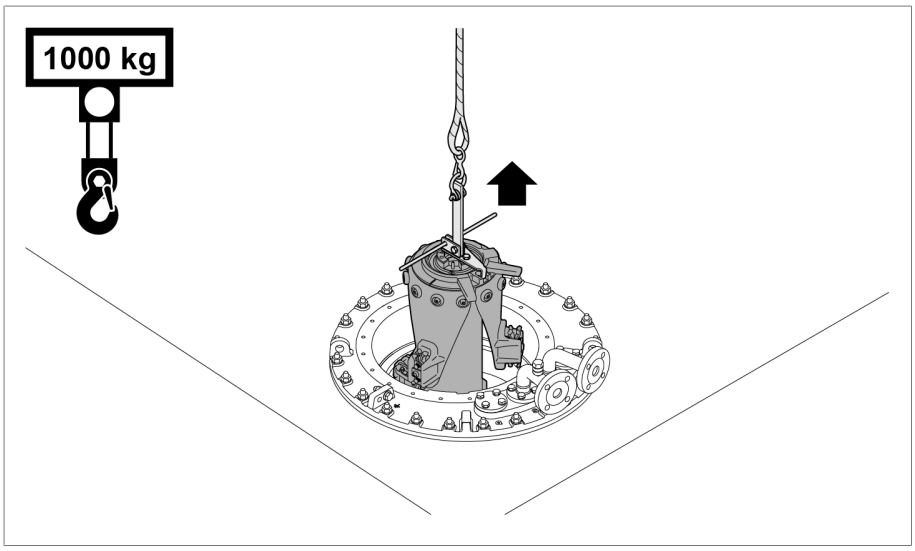

Figure 45: Diverter switch insert

5. ⚠ **CAUTION!** An unstably positioned on-load tap-changer insert may tip, resulting in injuries and property damage. Place the on-load tap-changer insert on a level surface and secure it against tipping.

5.2.6.2.1.7 Lifting out the on-load tap-changer insert (OILTAP V III 500 D, Um=76 kV)

The V III 500 D-40 kV on-load tap-changer insert was provided with and without a change-over selector with upper switching element offset by 180° (phase U) in the years 07/89 to 11/90.

The V III 500 D-76 kV on-load tap-changer insert was also provided with and without a change-over selector with upper switching element offset by 180° (phase U) in the years 07/89 to 05/95.

In order to remove the on-load tap-changer insert, the following requirements must be met:

- The on-load tap-changer is in the adjustment position (see supplied connection diagram of the on-load tap-changer).
- The change-over selector connects 0 and (-)
- The switching elements are at selector switch contact K

In addition, the following components must already be removed:

- On-load tap-changer head cover
- Gear unit
- Suction pipe

In order to remove the on-load tap-changer insert, proceed as follows:

1. Secure the operating wrench at the coupling of the on-load tap-changer insert.

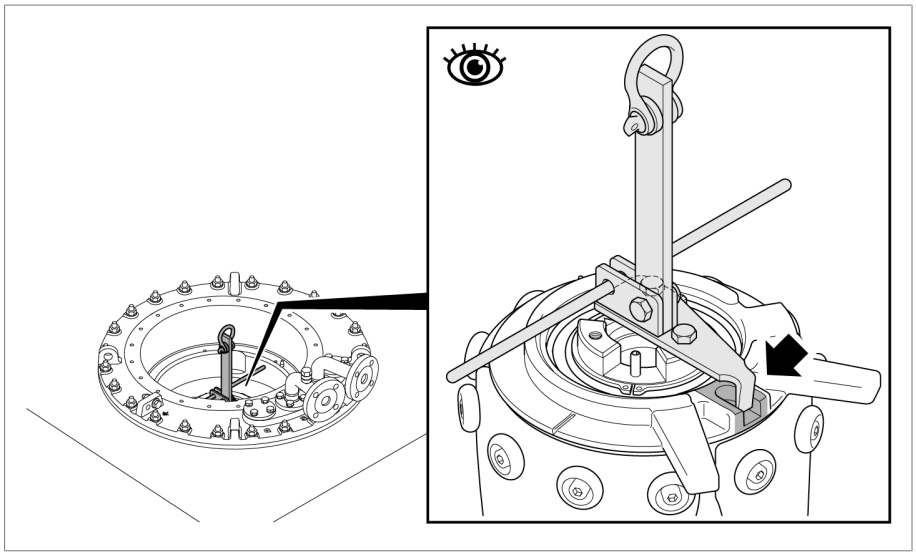

Figure 46: Operating wrench

2. Turn the operating wrench clockwise until the moving contacts of the change-over selector are between the fixed contacts of the change-over selector.

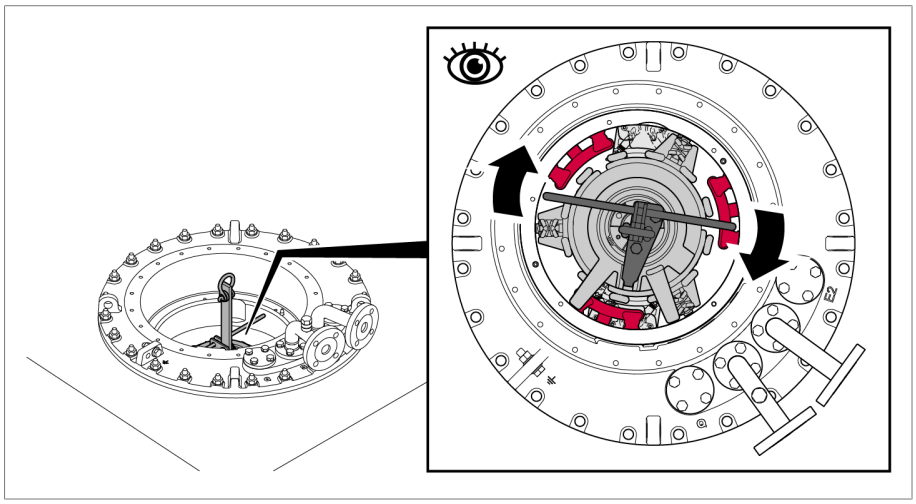

Figure 47: OILTAP V III 500

3. Carefully pull the on-load tap-changer insert upwards vertically until the phase U switching element is directly under the fixed contacts of the change-over selector.

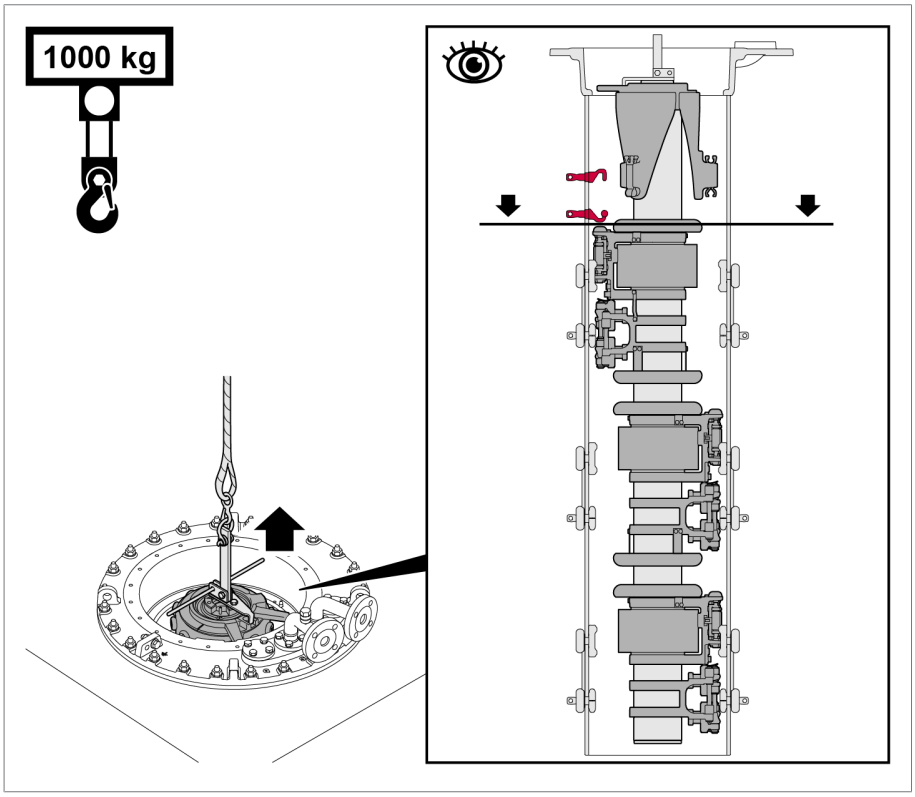

Figure 48: On-load tap-changer insert

4. Turn the operating wrench back to the same angle counterclockwise.

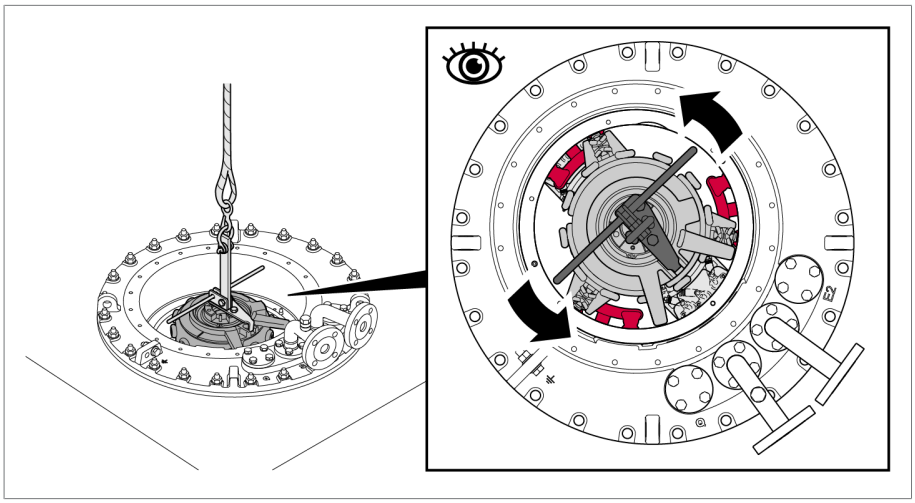

Figure 49: On-load tap-changer insert

5. Carefully pull the on-load tap-changer insert upwards vertically until the phase V switching element is directly under the fixed contacts of the change-over selector.

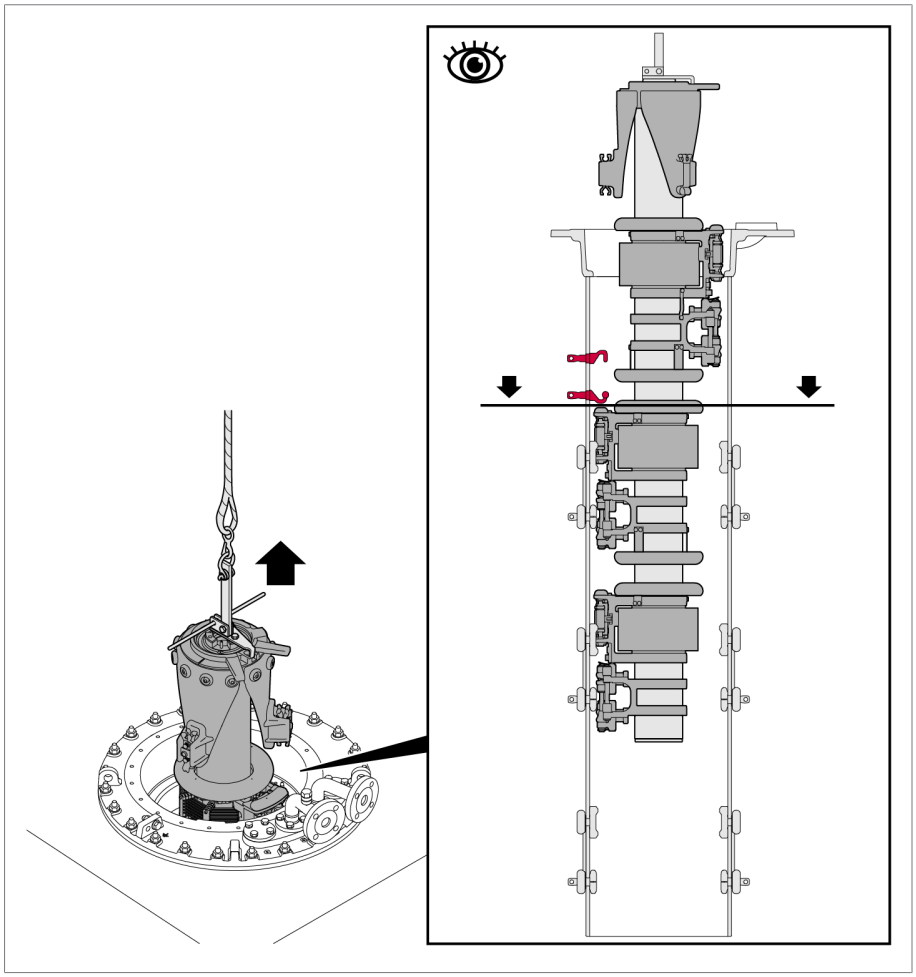

Figure 50: On-load tap-changer insert

6. Turn the operating wrench clockwise once again until the switching elements of phases V and W are between the fixed contacts of the change-over selector.

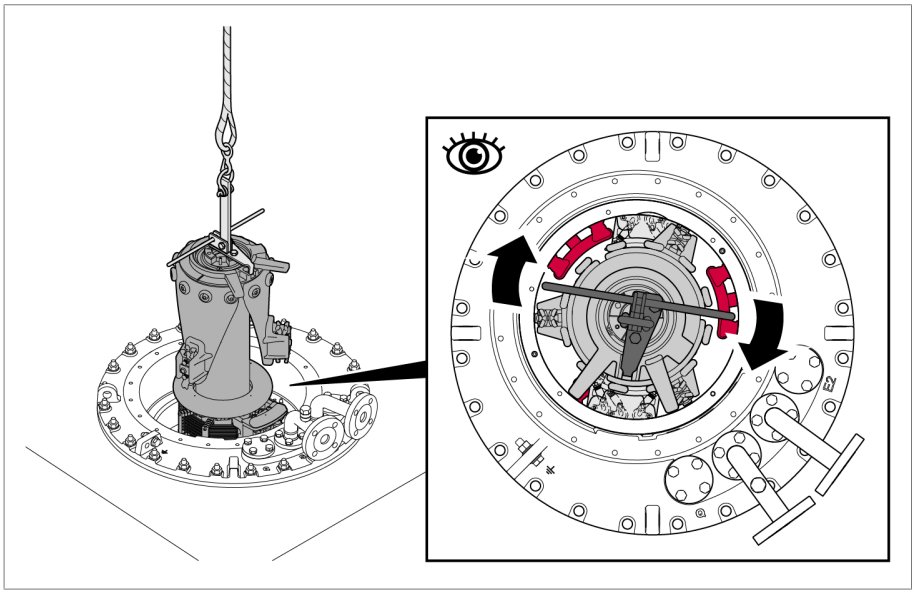

Figure 51: On-load tap-changer insert

7. Lift out the on-load tap-changer insert completely.

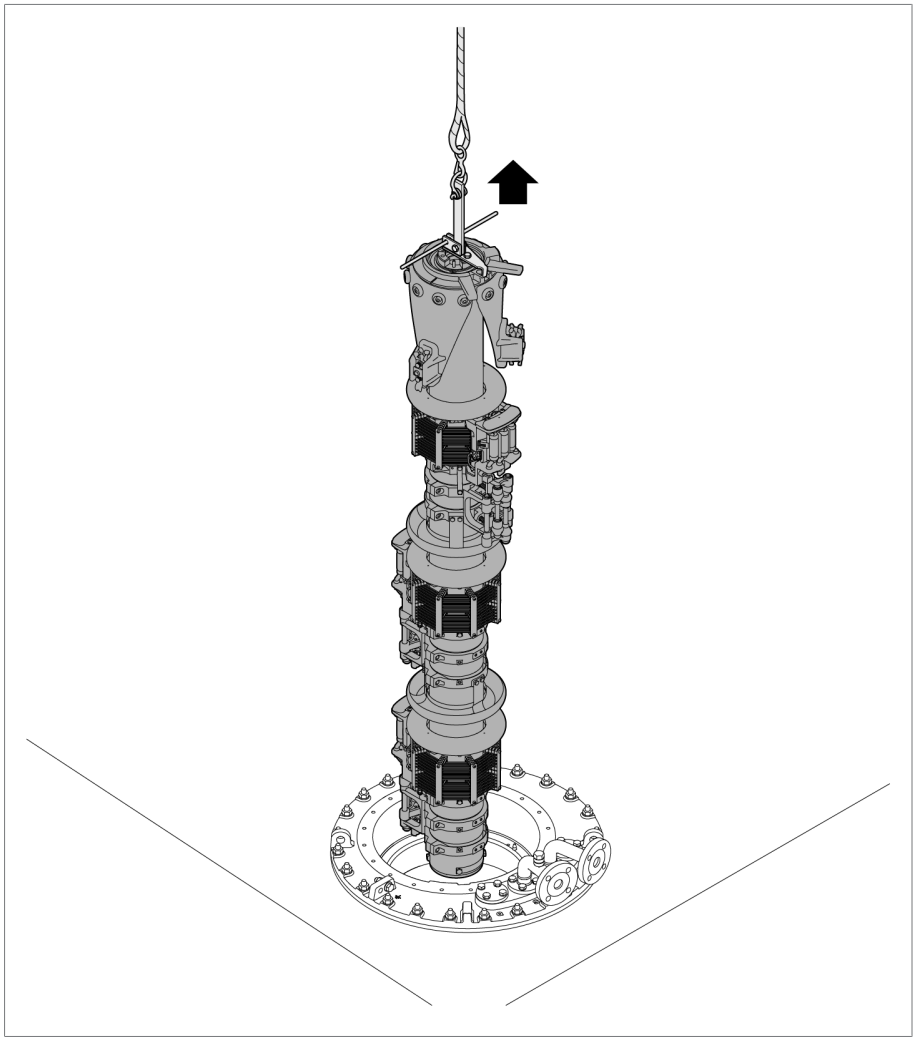

Figure 52: On-load tap-changer insert

5.2.6.2.2 Opening kerosene drain plug

► **NOTICE!** Unscrew the kerosene drain plug in the bottom of the oil compartment until it starts to get hard to turn. Never unscrew the kerosene drain plug all the way.

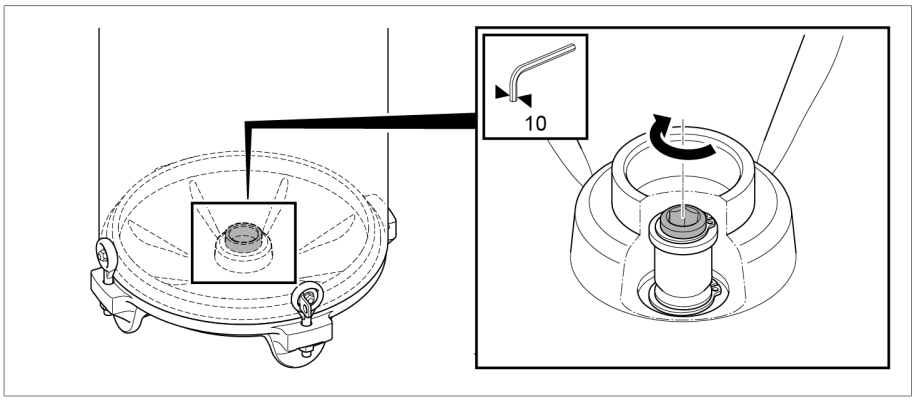

Figure 53: Kerosene drain plug

5.2.6.2.3 Inserting diverter switch insert

Proceed as follows to fit the diverter switch insert.

5.2.6.2.3.1 Inserting the on-load tap-changer insert (OILTAP V without change-over selector)

1. Secure the operating wrench at the coupling of the on-load tap-changer insert.

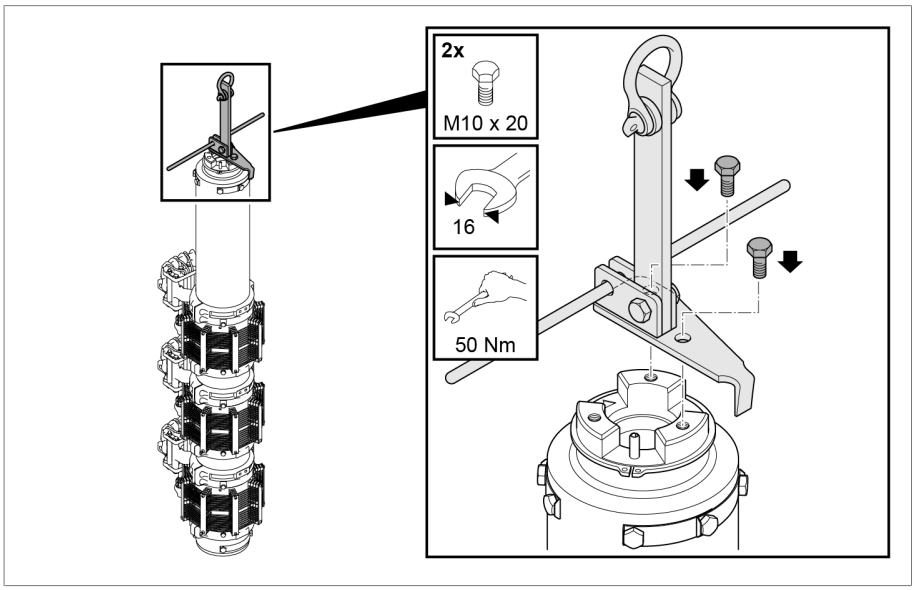

Figure 54: Operating wrench

2. Insert the lifting gear at the operating wrench.

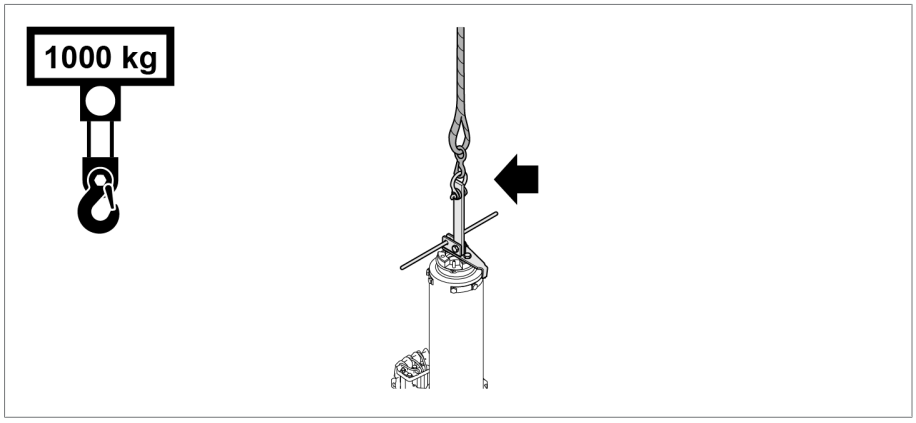

Figure 55: Lifting gear

3. Slowly lower the on-load tap-changer insert.

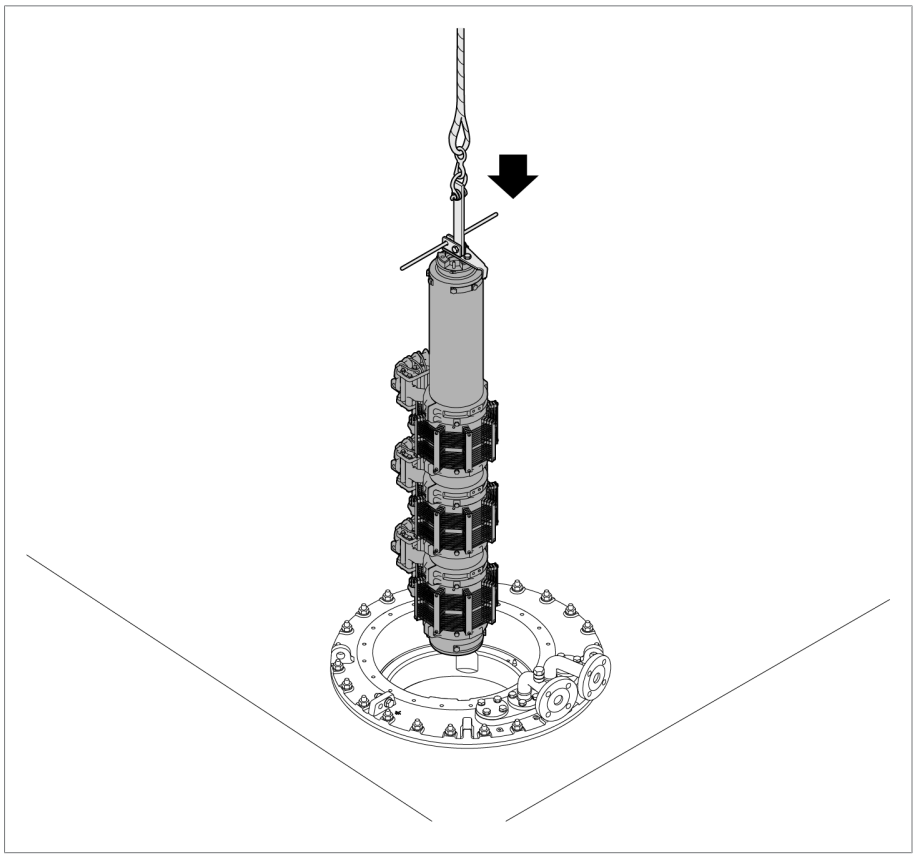

Figure 56: Diverter switch insert

4. Turn the on-load tap-changer insert so that it is approximately in the adjustment position after insertion (see supplied connection diagram of the on-load tap-changer).

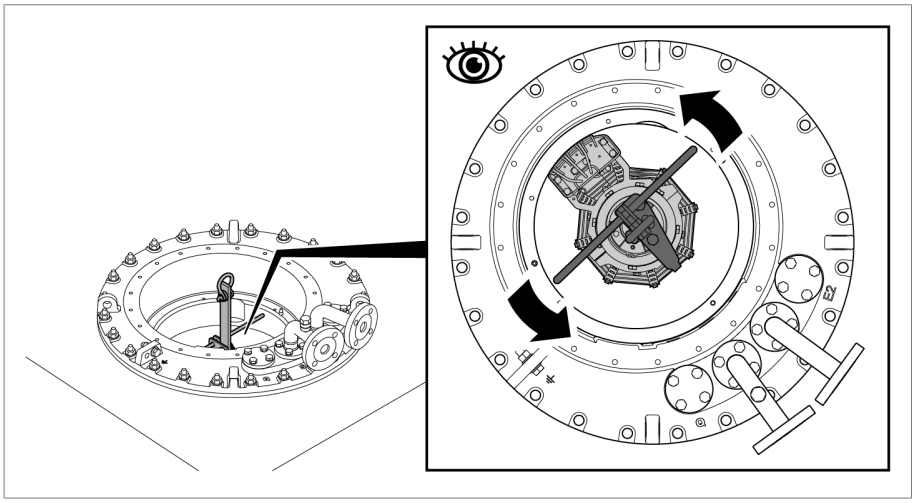

Figure 57: Diverter switch insert

5. Remove the operating wrench.

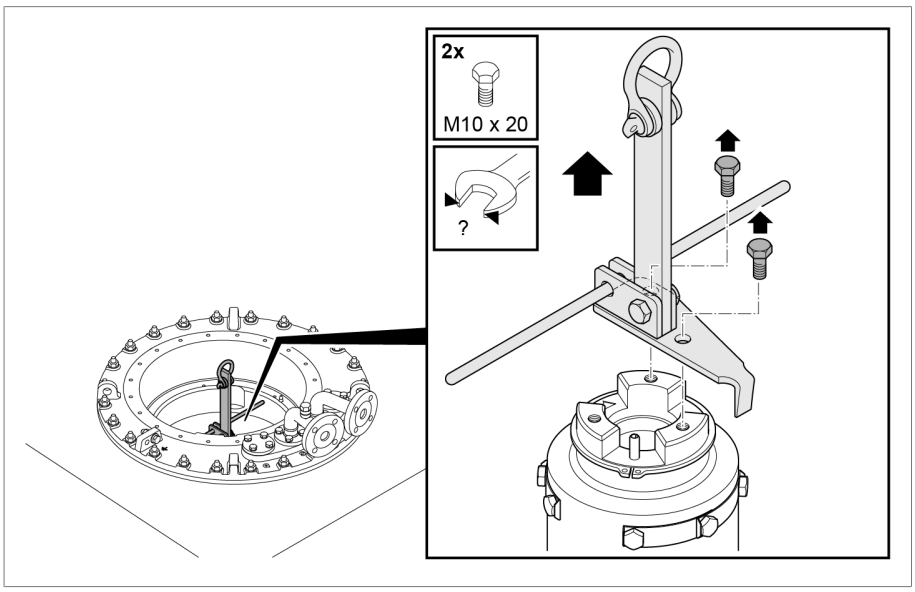

Figure 58: Operating wrench

5.2.6.2.3.2 Inserting the on-load tap-changer insert (OILTAP V with change-over selector)

1. Secure the operating wrench at the coupling of the on-load tap-changer insert.

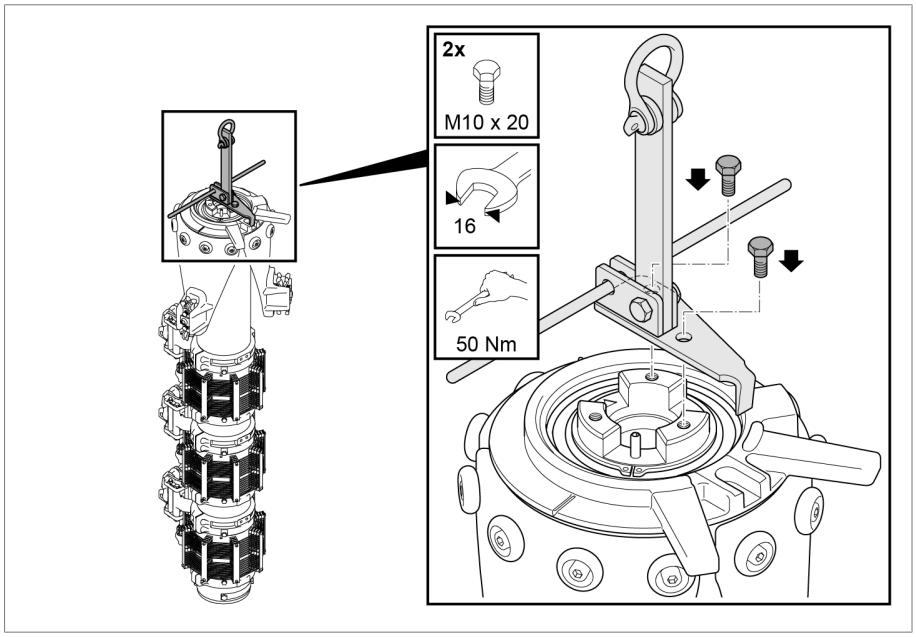

Figure 59: Operating wrench

2. Insert the lifting gear at the operating wrench.

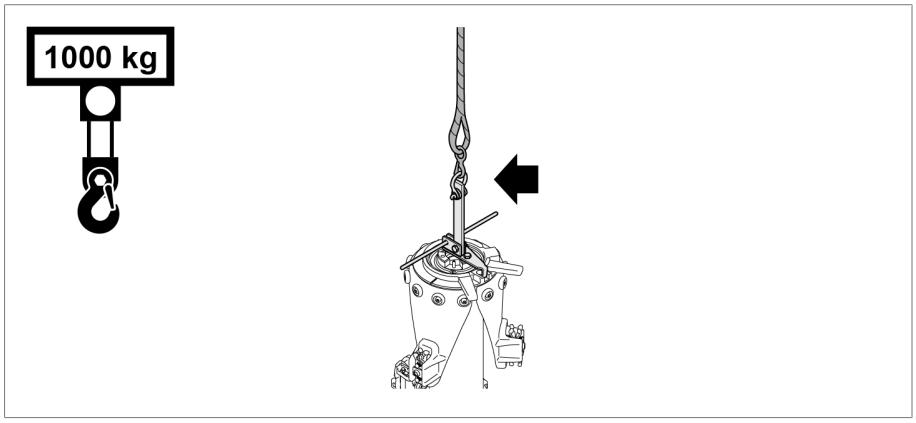

Figure 60: Lifting gear

3. Slowly lower the on-load tap-changer insert.

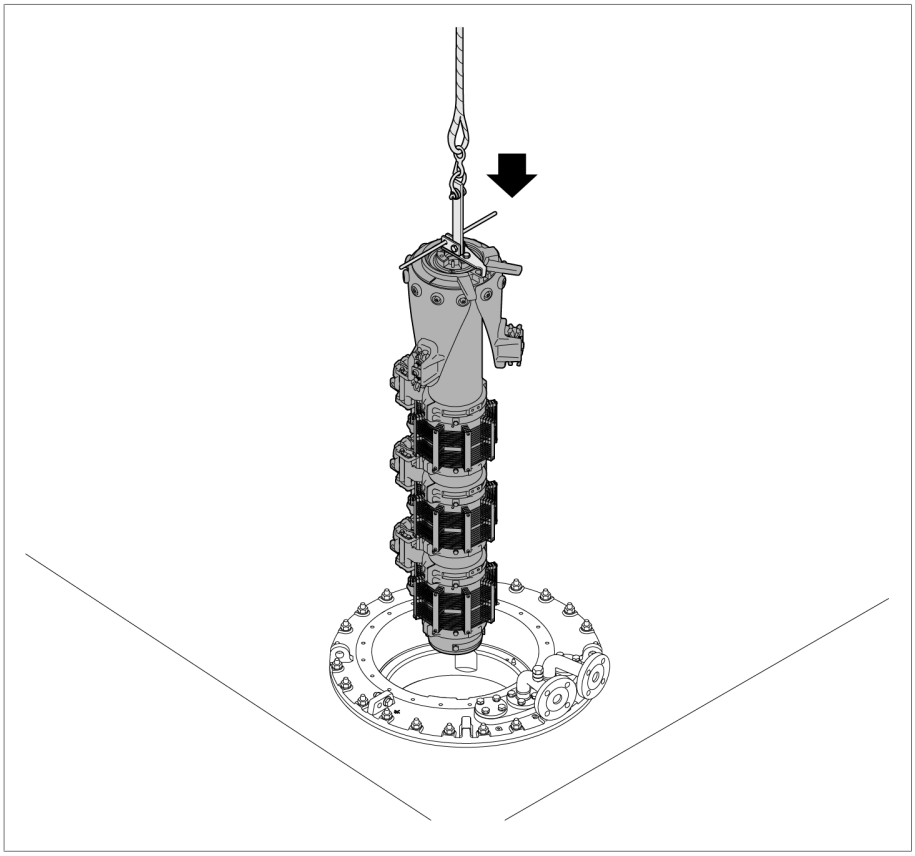

Figure 61: Diverter switch insert

4. Turn the on-load tap-changer insert counterclockwise so that the moving change-over selector contacts are between the fixed change-over selector contacts of the different phases after insertion.

5. Continue turning the on-load tap-changer insert counterclockwise until both triangular markings in the on-load tap-changer head and on the support rails are aligned (also see adjustment plan) and the change-over selector contacts are correctly in the closed position.

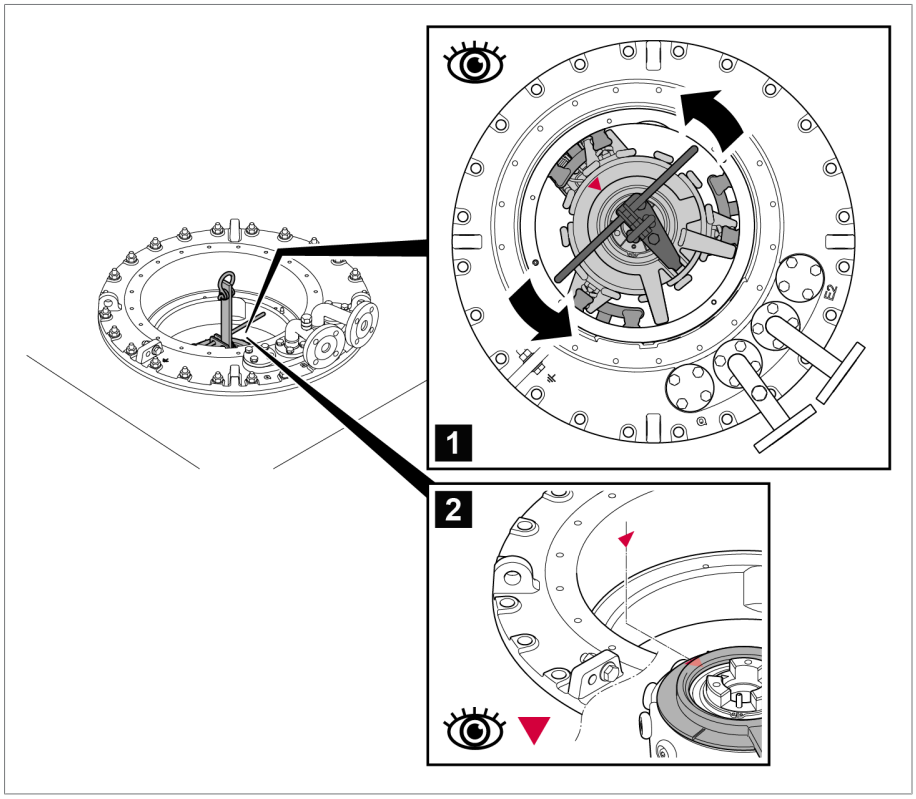

Figure 62: On-load tap-changer insert check

6. Remove the operating wrench.

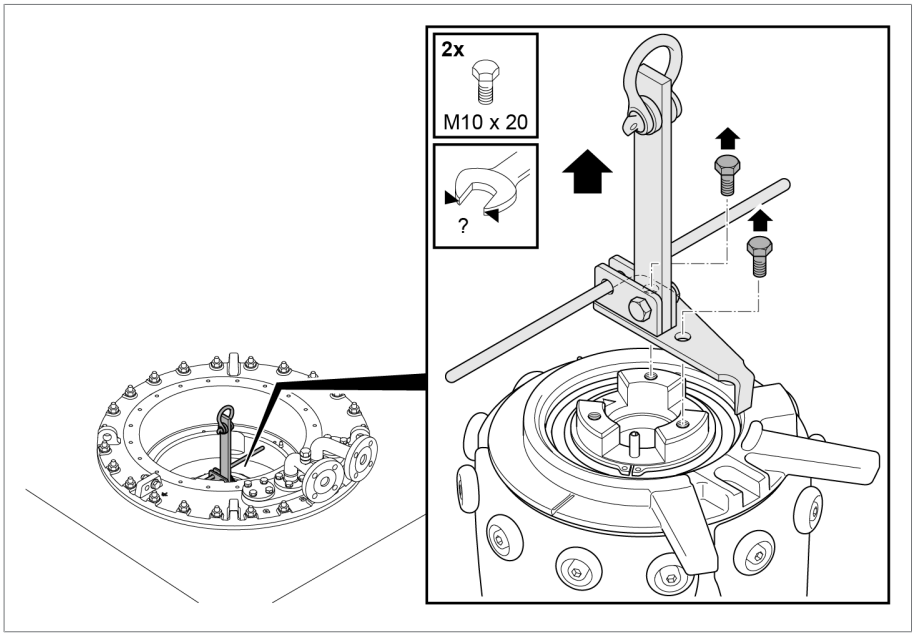

Figure 63: Operating wrench

5.2.6.2.3.3 Inserting the on-load tap-changer insert (OILTAP V III 500 D, Um=76 kV)

The V III 500 D-40 kV on-load tap-changer insert was provided with and without a change-over selector with upper switching element offset by 180° (phase U) in the years 07/89 to 11/90.

The V III 500 D-76 kV on-load tap-changer insert was also provided with and without a change-over selector with upper switching element offset by 180° (phase U) in the years 07/89 to 05/95.

1. Secure the operating wrench at the coupling of the on-load tap-changer insert.

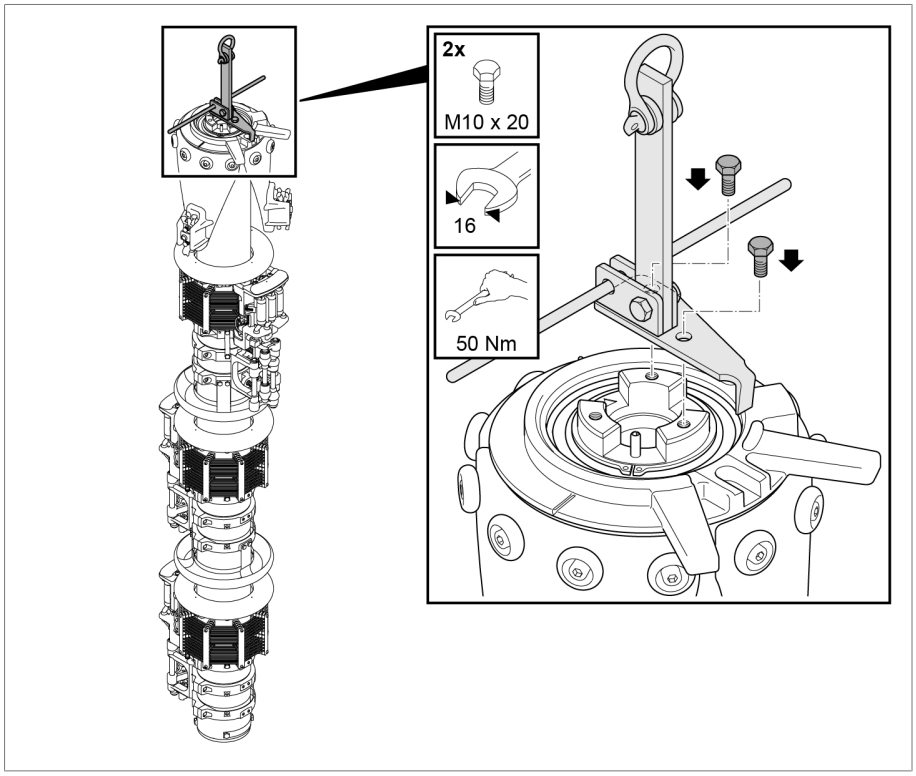

Figure 64: Operating wrench

2. Secure the lifting gear at the operating wrench.

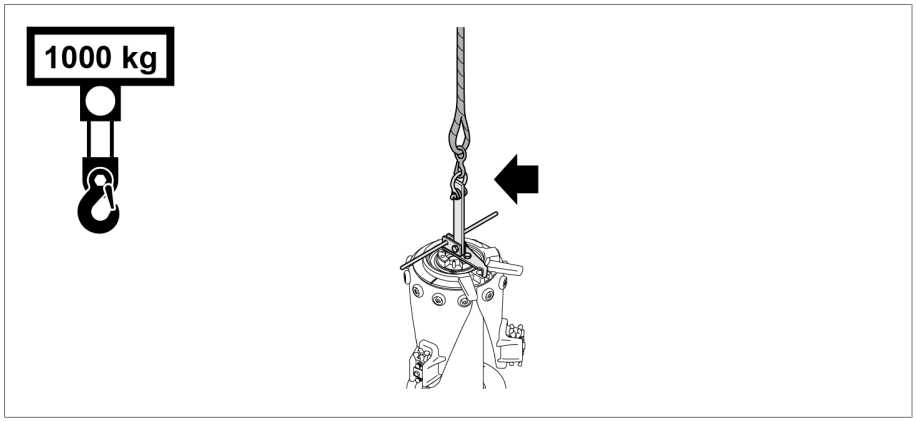

Figure 65: Lifting gear

3. Carefully lower the on-load tap-changer insert vertically. The phase V and W switching elements **1** must be between the fixed contacts **2** of the change-over selector.

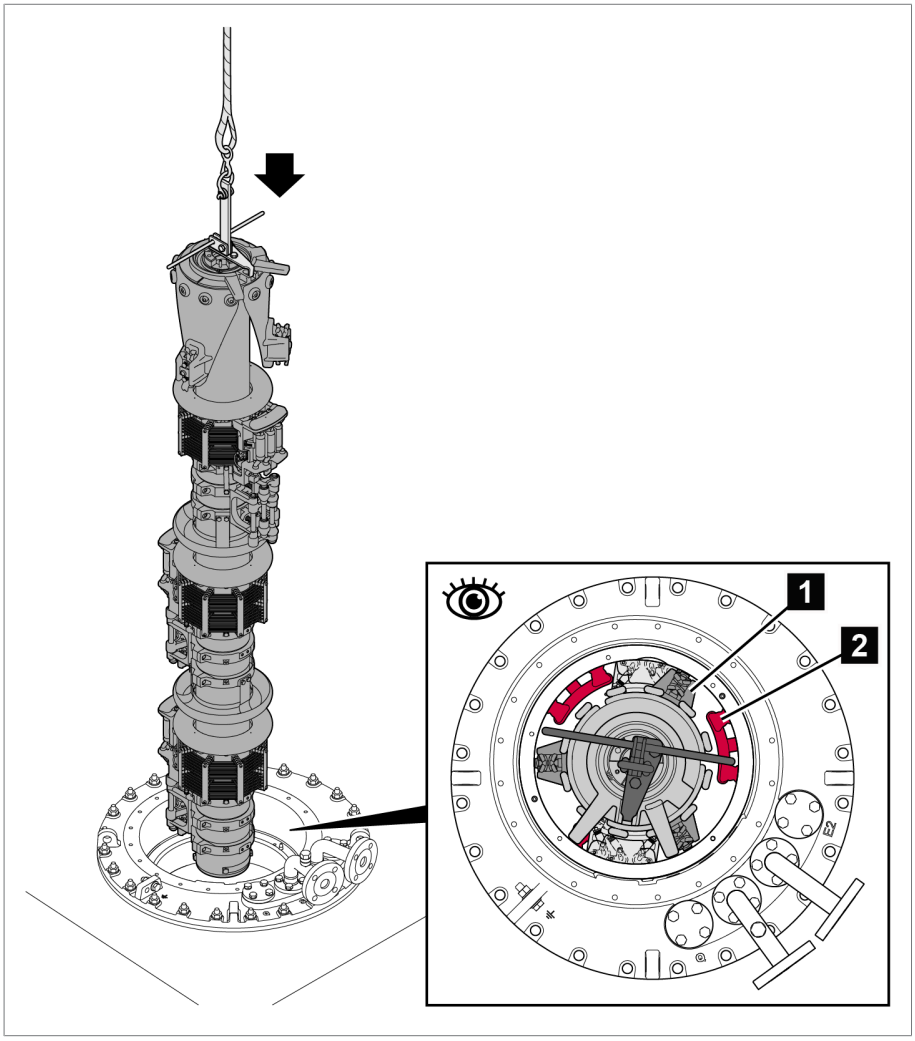

Figure 66: On-load tap-changer insert

4. Carefully lower the on-load tap-changer insert vertically until the phase U switching element is directly over the fixed contacts of the change-over selector.

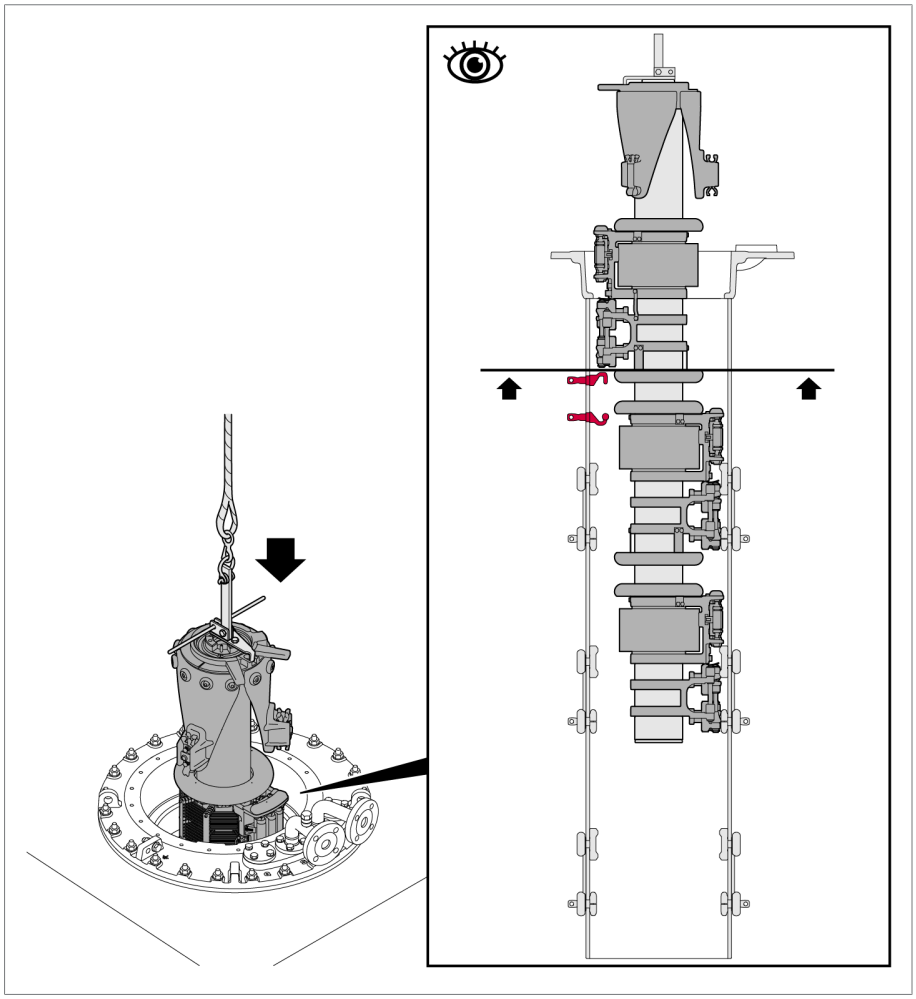

Figure 67: On-load tap-changer insert

5. Turn the operating wrench counterclockwise until the phase U switching element is between the fixed contacts of the change-over selector.

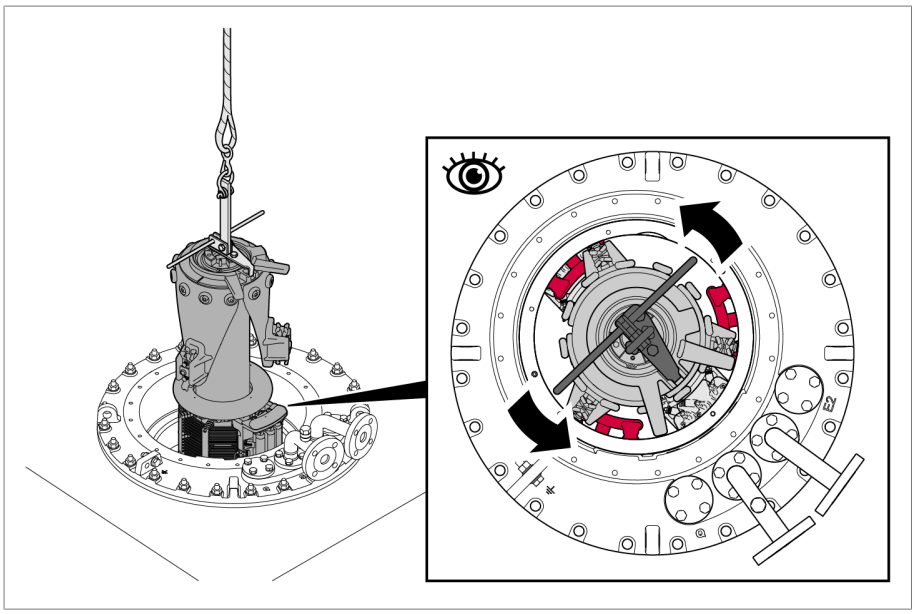

Figure 68: On-load tap-changer insert

6. Carefully lower the on-load tap-changer insert until the moving contacts of the change-over selector are directly over the fixed contacts of the change-over selector.

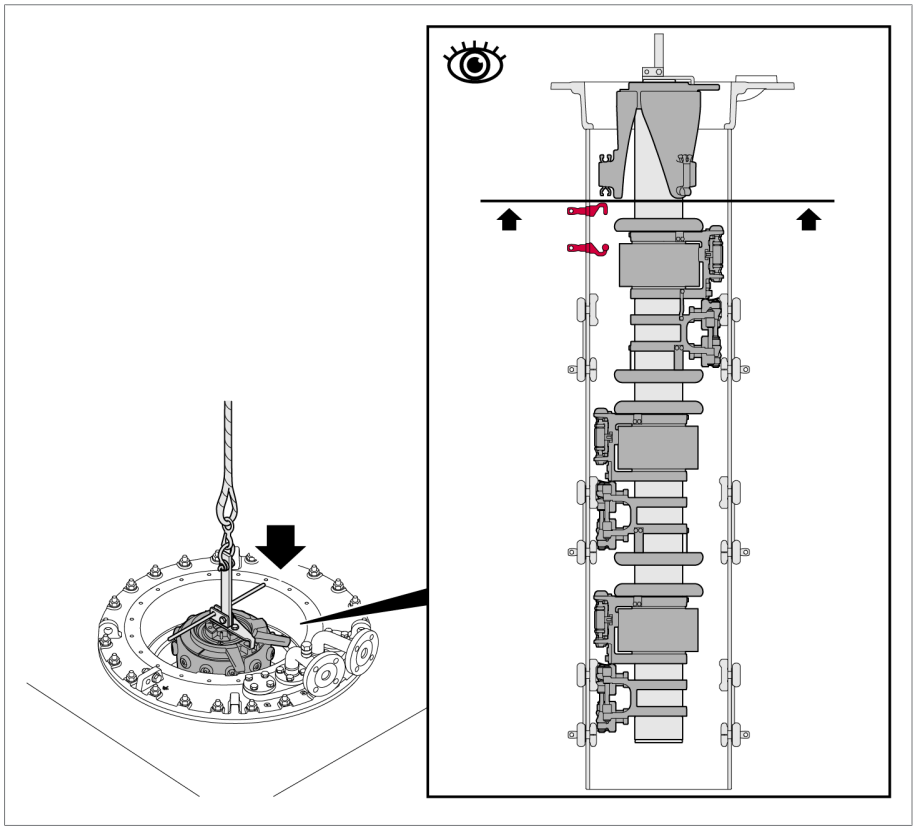

Figure 69: On-load tap-changer insert

7. Turn the operating wrench clockwise until the moving contacts of the change-over selector are between the fixed contacts of the change-over selector.

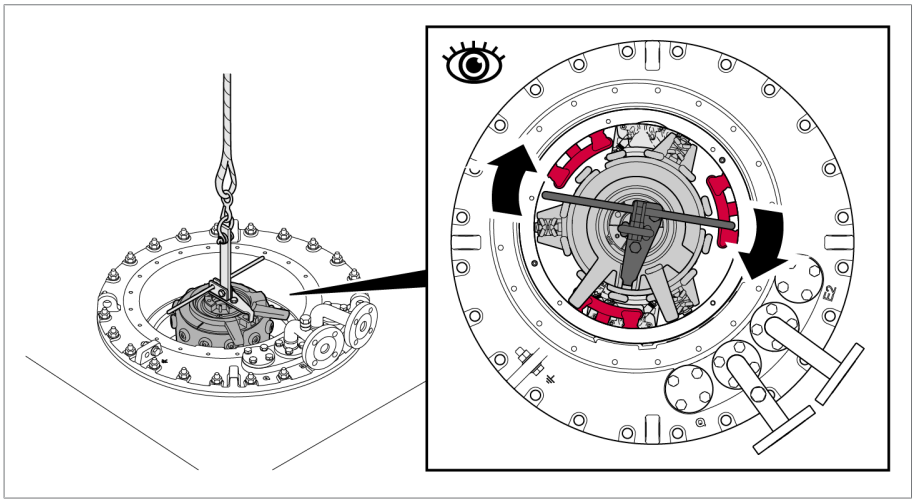

Figure 70: On-load tap-changer insert

8. Lower the on-load tap-changer. Remove the lifting gear.

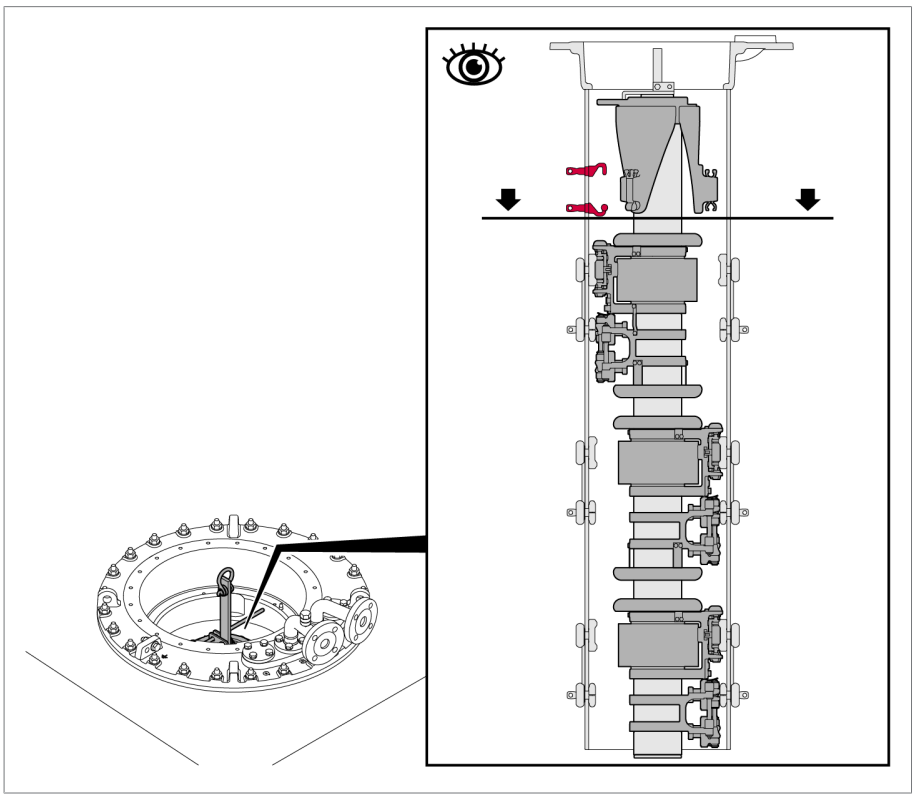

Figure 71: On-load tap-changer insert

9. Turn the operating wrench counterclockwise to put the change-over selector in the closed position. The change-over selector connects 0 and (-); the switching elements are at selector switch contact K.

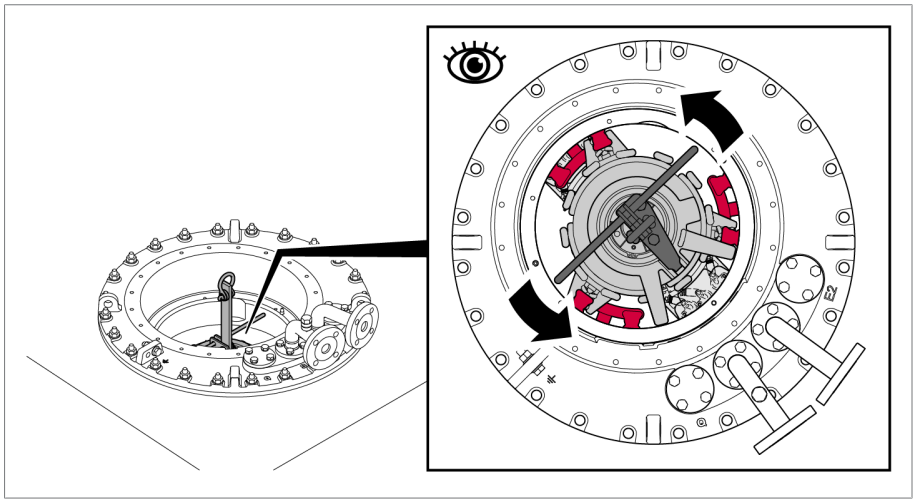

Figure 72: On-load tap-changer insert

10. Check the position of the support rail. The two triangles on the on-load tap-changer head and on the support rail must be aligned (also see the adjustment plan). The change-over selector contacts are then correctly in the closed position.

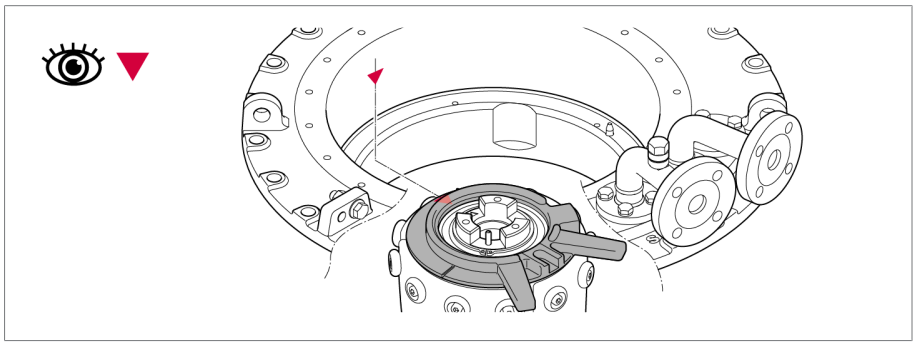

Figure 73: Check support rail

5.2.6.2.3.4 Inserting oil suction pipe

NOTICE

Damage to the on-load tap-changer!

Damage to the on-load tap-changer and oil suction pipe due to incorrect order of installation.

► Strictly adhere to the order of installation. Make sure to always install the diverter switch insert before inserting the oil suction pipe into the oil compartment.

1. Carefully insert the suction pipe by hand.

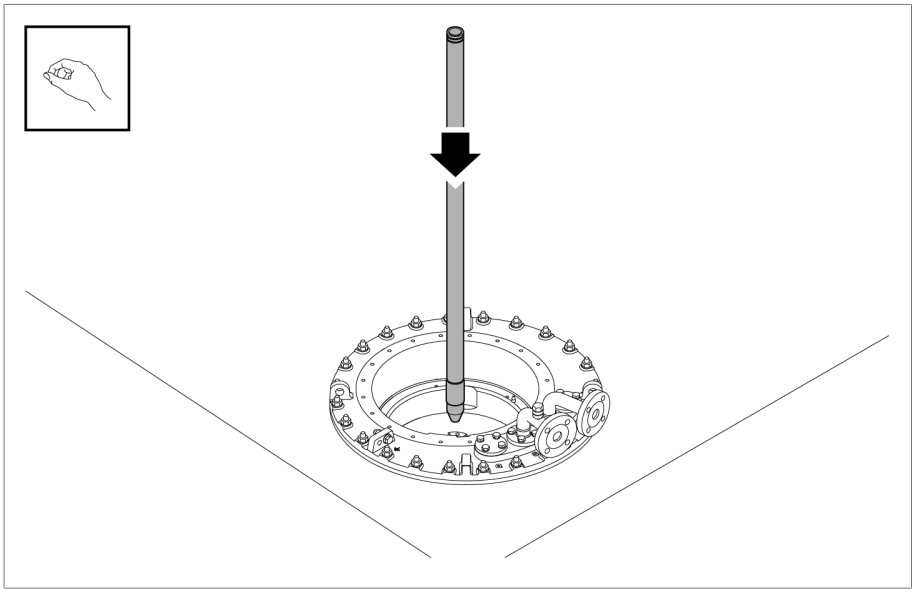

Figure 74: Oil suction pipe

2. Press on the upper end of the suction pipe. The suction pipe snaps into the oil compartment base.

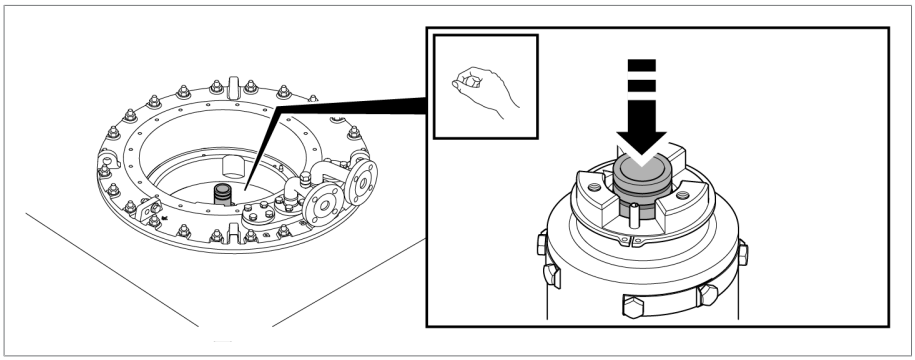

Figure 75: Oil suction pipe

5.2.6.2.3.5 Installing the gear unit

1. Check that the support rail is in the correct position. Both triangular markings in the on-load tap-changer head and on the support rail must be aligned (also see the adjustment plan).

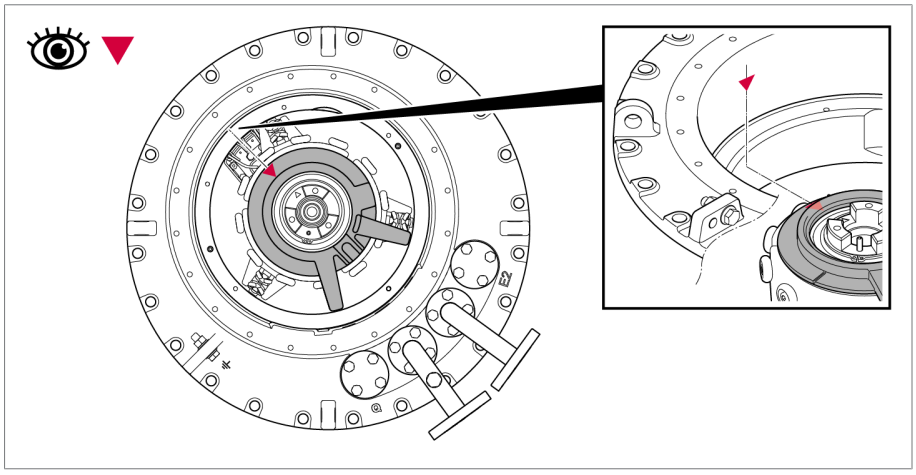

Figure 76: Support rail

2. Ensure that the gear unit is in the adjustment position (see supplied connection diagram of the on-load tap-changer). Install the gear unit. Installation and coupling can be done only in this position. Pay attention to the spring washers.

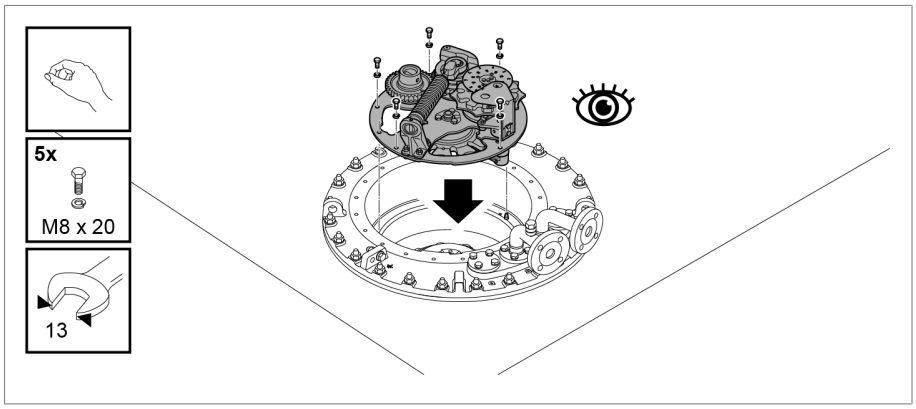

Figure 77: Gear unit supporting plate

5.2.6.2.3.6 Securing on-load tap-changer head cover

NOTICE

Damage to the on-load tap-changer!

A missing or damaged o-ring as well as unclean sealing surfaces lead to insulating fluid escaping and therefore to damage to the on-load tap-changer.

- ► Ensure that the o-ring is positioned untwisted in the on-load tap-changer head cover.
- ► Ensure that the o-ring does not become damaged when mounting the cover.
- ► Ensure that the sealing surfaces on the on-load tap-changer head cover and on-load tap-changer head are clean.

1. Align the on-load tap-changer head cover in such a way that the red triangular markings on the on-load tap-changer head and the on-load tap-changer head cover are aligned.

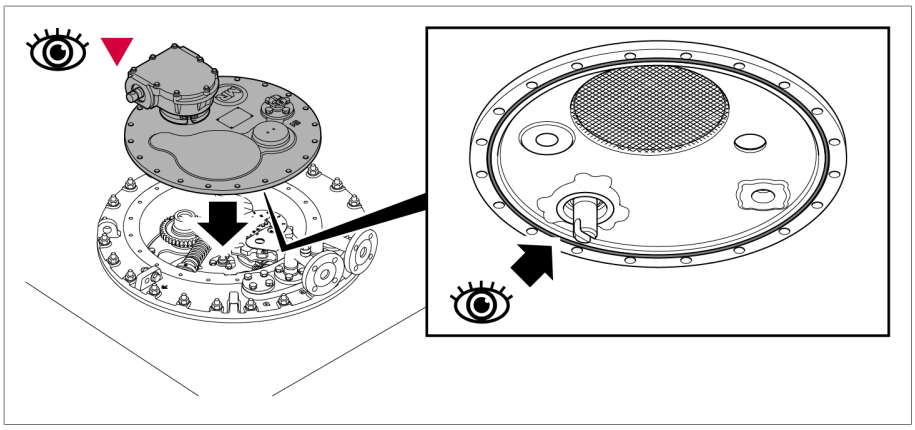

Figure 78: On-load tap-changer head cover

2. Screw the on-load tap-changer head cover onto the on-load tap-changer head.

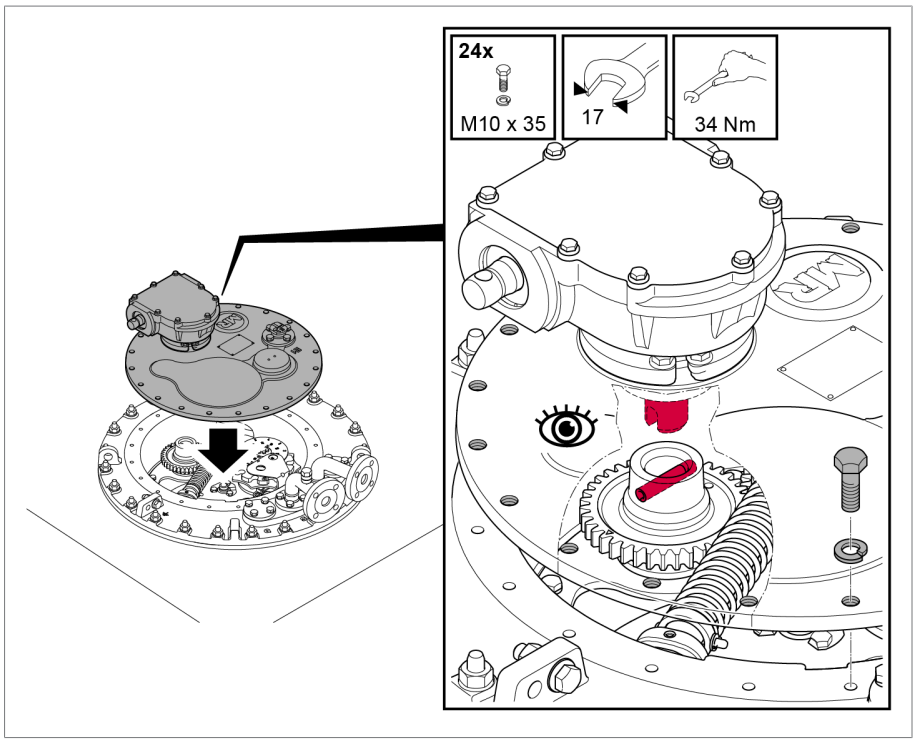

Figure 79: On-load tap-changer head cover

5.2.6.2.4 Drying the on-load tap-changer

1. Connect pipe connections R and Q of on-load tap-changer head to the kerosene vapor lead using one shared lead.
2. Seal off unused pipe connections with a suitable blank cover.

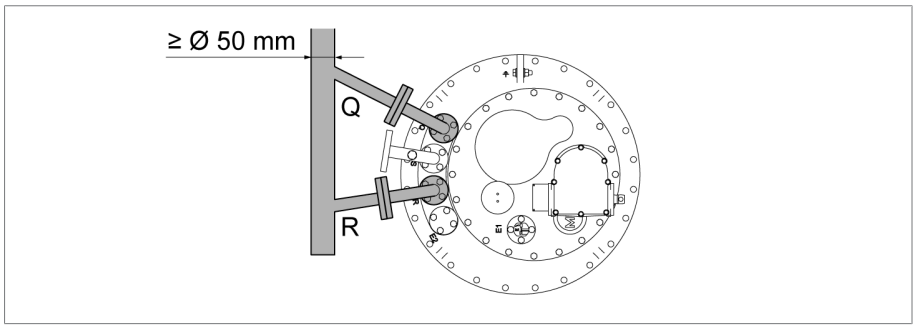

Figure 80: Shared lead

Vapor-phase drying in the transformer tank

1. Supply kerosene vapor at a temperature of around 90°C. Keep this temperature constant for 3 to 4 hours.
2. Increase the kerosene vapor temperature by approx. 10°C/hour to the desired final temperature of max. 125°C at the on-load tap-changer.
3. Vacuum-dry on-load tap-changer at between 105°C and maximum 125°C for at least 50 hours.
4. Residual pressure of no more than 10^{-3} bar.

5.2.6.2.5 Closing kerosene drain plug

NOTICE

Damage to the on-load tap-changer!

Moisture in the oil compartment reduces the dielectric strength of the insulating fluid and thus leads to damage to the on-load tap-changer.

► Within 10 hours of drying, seal off oil compartment with on-load tap-changer head cover.

1. Remove [►Section 5.2.6.2.1, Page 54] the diverter switch insert.
2. Close kerosene drain plug by turning clockwise with extended socket wrench (tightening torque 39 Nm).
3. Insert [►Section 5.2.6.2.3, Page 66] the diverter switch insert.

If you wish to perform another transformer ratio test after drying, proceed as described in the section "Performing transformer ratio test following drying" [►Section 5.2.8, Page 86].

5.2.7 Filling the oil compartment of the on-load tap-changer with insulating fluid

NOTICE

Damage to the on-load tap-changer!

Unsuitable insulating fluids cause damage to the on-load tap-changer.

► Only use insulating fluids that meet the requirements in accordance with IEC 60296.

After drying, completely fill the oil compartment (on-load tap-changer insert fitted) with insulating fluid again as soon as possible so that an impermissible amount of humidity is not absorbed from the surroundings.

1. Establish a connecting lead between pipe connection E2 and one of the pipe connections R, S or Q to ensure equal pressure in the oil compartment and transformer during evacuation.

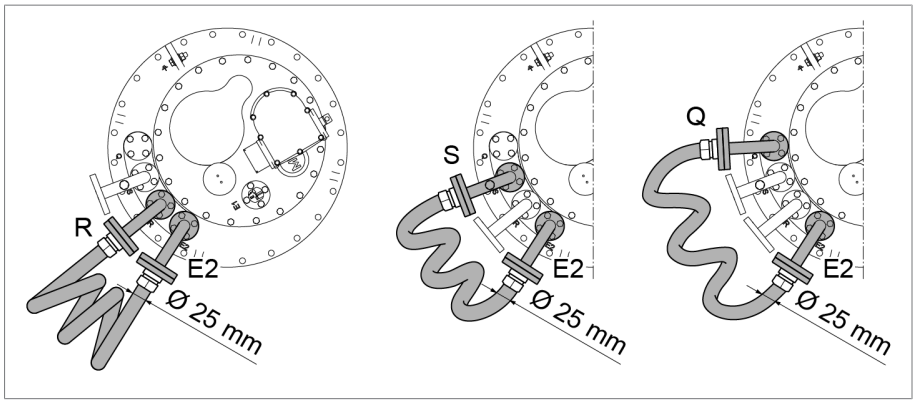

Figure 81: Connecting lead

2. Fill on-load tap-changer with new insulating fluid using one of the two free pipe connections of the on-load tap-changer head.

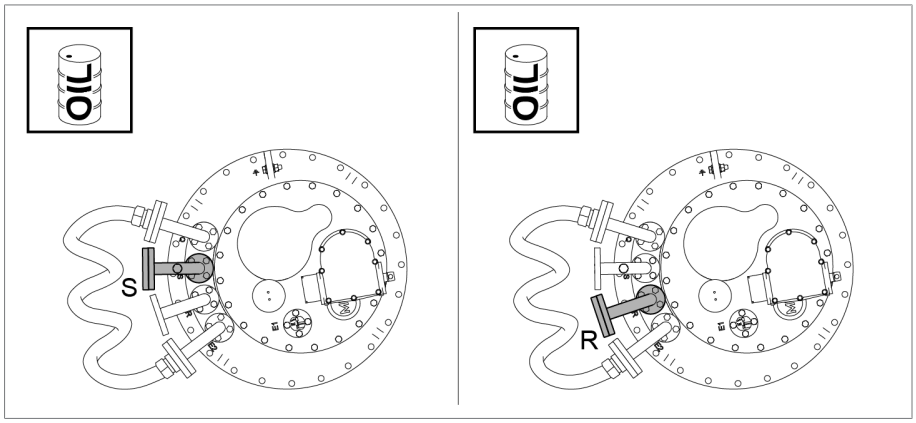

Figure 82: Pipe connections S and R

5.2.8 Performing transformer ratio test after drying

NOTICE

Damage to the on-load tap-changer!

Damage to the on-load tap-changer due to transformer ratio test being incorrectly performed.

- ► Ensure that the selector / de-energized tap changer is fully immersed in the insulating fluid and that the oil compartment of the on-load tap-changer is completely filled with insulating fluid.
- ► Only switch the on-load tap-changer from one operating position to the next via the upper gear unit. You can use a short tube (diameter 25 mm) with screwed-in coupling bolt (diameter 12 mm) with a hand wheel or crank for this, for example. When using a drill, do not exceed a maximum speed of 250 rpm.
- ► Always check the operating position reached through the inspection window in the on-load tap-changer head cover. Never overshoot the end positions, which are indicated in the connection diagram supplied with the delivery.
- ► For multiple-column applications with a shared drive, link all on-load tap-changer heads to one another using the horizontal drive shaft part.

When actuating the change-over selector, a higher torque is required.

To perform the transformer ratio test, proceed as follows:

1. Switch the on-load tap-changer into the desired operating position. The diverter switch operation can be heard distinctly.
2. **NOTICE!** An incomplete tap-change operation may damage the on-load tap-changer. After operating the diverter switch, continue to crank the drive shaft of the upper gear unit for 2.5 revolutions in the same direction in order to correctly complete the tap-change operation.
3. Perform the transformer ratio test.
4. Repeat the transformer ratio test in all operating positions.
5. Once the transformer ratio test is complete, return on-load tap-changer to its adjustment position (see supplied connection diagram of the on-load tap-changer).

5.3 Installing the on-load tap-changer in the transformer (bell-type tank version)

The following chapters explain how to install the on-load tap-changer in the transformer (bell-type tank version).

5.3.1 Inserting on-load tap-changer into supporting structure

1. Remove red-colored packaging material and transport material from on-load tap-changer.
2. **NOTICE!** Using spacers, insert on-load tap-changer vertically into supporting structure (maximum 1° deviation from the vertical) so that the on-load tap-changer reaches its final installation height and only has to be raised a maximum of 5 to 20 mm after fitting the bell-type tank. If this is not done, once the tap winding and on-load tap-changer take-off lead are connected tension may occur which will damage the on-load tap-changer and transformer. There is also a risk of leaks on the oil compartment and malfunctions from selector contacts closing incorrectly! Ensure that change-over selector and supporting structure do not collide.

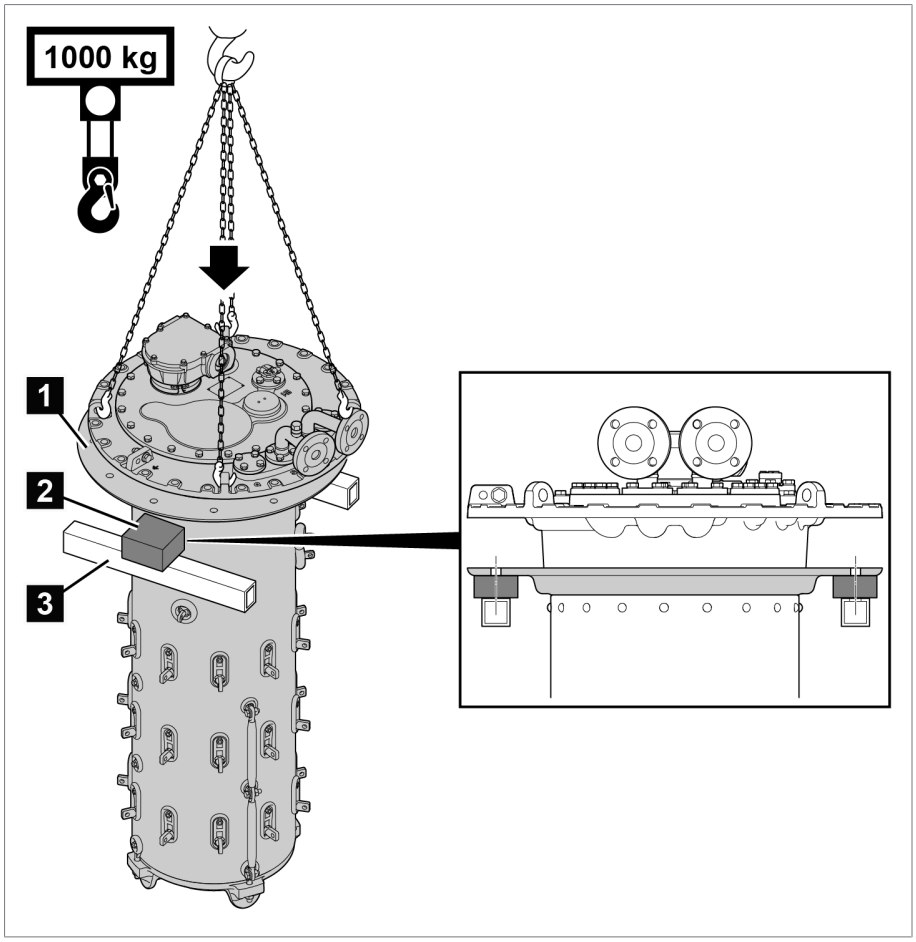

Figure 83: Supporting structure

1	Supporting flange
2	Spacer
3	Supporting structure

3. Temporarily fasten on-load tap-changer to supporting structure. The supporting flange has through holes for this purpose.

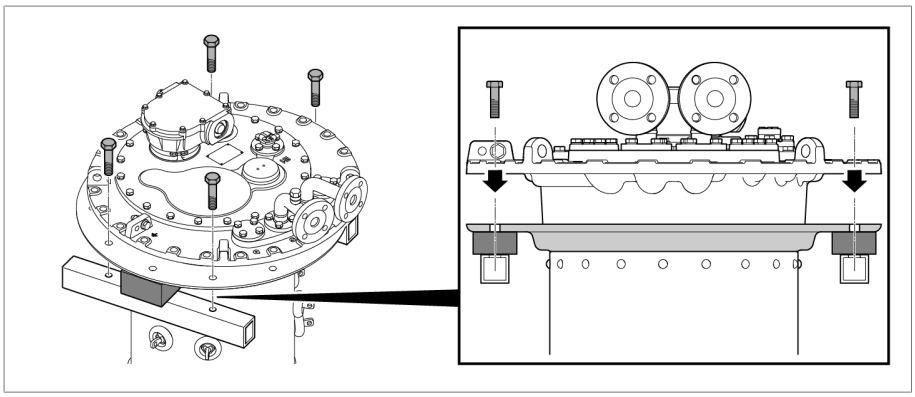

Figure 84: Temporary fastening

5.3.2 Connecting the tap winding and on-load tap-changer take-off lead

NOTICE

Damage to the on-load tap-changer!

Connecting leads which place mechanical strain on the on-load tap-changer will damage the on-load tap-changer!

► Establish and secure connections with care.

► Do not twist connection contacts.

► Connect connecting leads without warping or deforming.

► If necessary use an expansion loop for connecting leads.

1. Connect the tap winding and on-load tap-changer take-off lead in accordance with the connection diagram included with the delivery.
2. If connection leads have to cross the open surface of the oil compartment/change-over selector, there must be a clearance of 50 mm between the connecting leads and the surface of the oil compartment/change-over selector.

The designations of the on-load tap-changer's connection contacts are shown in the connection diagram. The connection contacts are provided with horizontal or vertical through-holes (see appendix):

- OILTAP® V 350: 11 mm diameter for M10 screws
- OILTAP® V 200: 9 mm diameter for M8 screws (M8 screws on tap selector, M10 screws on change-over selector and take-off terminals)

5.3.3 Performing transformer ratio test before drying

NOTICE

Damage to the on-load tap-changer!

Damage to the on-load tap-changer due to transformer ratio test being incorrectly performed.

- ► Do not perform more than 250 tap-change operations on the on-load tap-changer. If more than 250 tap-change operations are to be performed, completely fill the oil compartment with insulating fluid and lubricate sliding surfaces of contacts on the selector and selector gear with insulating fluid.
- ► Only switch the on-load tap-changer from one operating position to the next via the upper gear unit. You can use a short tube (diameter 25 mm) with screwed-in coupling bolt (diameter 12 mm) with a hand wheel or crank for this, for example. When using a drill, do not exceed a maximum speed of 250 rpm.
- ► Always check the operating position reached through the inspection window in the on-load tap-changer head cover. Never overshoot the end positions, which are indicated in the connection diagram supplied with the delivery.
- ► For multiple-column applications with a shared drive, link all on-load tap-changer heads to one another using the horizontal drive shaft parts.

When actuating the change-over selector, a higher torque is required.

To perform the transformer ratio test, proceed as follows:

1. Switch the on-load tap-changer into the desired operating position. The diverter switch operation can be heard distinctly.
2. **NOTICE!** An incomplete tap-change operation may damage the on-load tap-changer. After operating the diverter switch, continue to crank the drive shaft of the upper gear unit for 2.5 revolutions in the same direction in order to correctly complete the tap-change operation.
3. Perform the transformer ratio test.
4. Repeat the transformer ratio test in all operating positions.
5. Once the transformer ratio test is complete, return on-load tap-changer to its adjustment position (see supplied connection diagram of the on-load tap-changer).

After the transformer ratio test, open the kerosene drain plug in the oil compartment if the on-load tap-changer is to be dried with kerosene in the transformer tank. After drying, the diverter switch insert must be removed, the kerosene drain plug in the oil compartment closed and the diverter switch insert refitted.

5.3.4 Performing DC resistance measurement on transformer

Note the measurement scenarios listed below and the associated maximum measured currents when performing DC resistance measurement on the transformer.

The measured DC current is normally restricted to 10% of the rated current of the measured transformer winding in order to prevent the winding from overheating.

Perform the DC resistance measurement in various on-load tap-changer operating positions. You need to distinguish here whether the measured current is interrupted when changing operating position or not.

Status of oil compartment	Without interruption in measured current	With interruption (measured current = 0 A before change in operating position)
Oil compartment empty	Maximum 10 A DC	Maximum 50 A DC
Oil compartment filled with insulating fluid	Maximum 50 A DC	Maximum 50 A DC

Table 5: Maximum permitted measured currents when performing DC resistance measurement on transformer

5.3.5 Drying on-load tap-changer in autoclave

NOTICE

Damage to the on-load tap-changer!

Moisture in the oil compartment reduces the dielectric strength of the insulating fluid and thus leads to damage to the on-load tap-changer.

► Within 10 hours of drying, seal off oil compartment with on-load tap-changer head cover.

Dry on-load tap-changer in accordance with the following instructions to ensure the dielectric values assured by MR for the on-load tap-changer.

If drying in an autoclave, the following methods are possible:

- Vacuum drying
- Vapor-phase drying

As an alternative to drying the on-load tap-changer in an autoclave, it can also be dried in the transformer tank.

5.3.5.1 Vacuum-drying in the autoclave

To vacuum-dry the on-load tap-changer in the autoclave, proceed as follows.

If you wish to perform another transformer ratio test after drying, proceed as described in the section "Performing transformer ratio test following drying" [► Section 5.3.10, Page 146].

5.3.5.1.1 Moving on-load tap-changer to adjustment position

► Move the on-load tap-changer into the adjustment position (see supplied connection diagram of the on-load tap-changer).

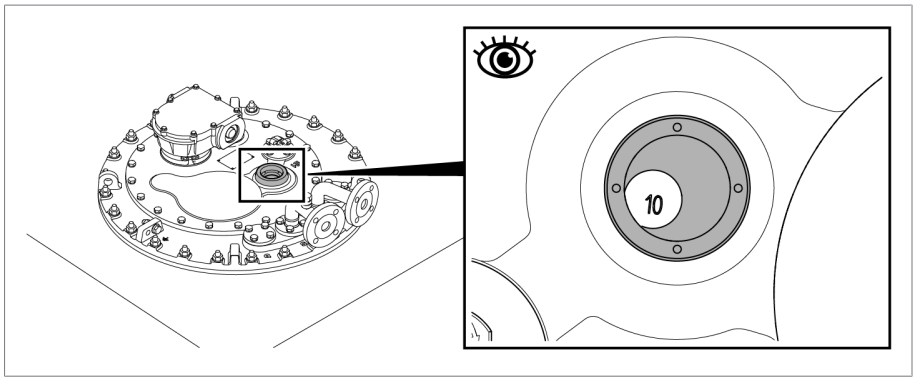

Figure 85: Adjustment position

5.3.5.1.2 Removing on-load tap-changer head cover

⚠ WARNING

Danger of explosion!

Explosive gases under the on-load tap-changer head cover can deflagrate or explode and result in severe injury or death.

► Ensure that there are no ignition sources such as open flames, hot surfaces or sparks (e.g. caused by the build-up of static charge) in the immediate surroundings and that none occur.

► De-energize all auxiliary circuits (for example tap-change supervisory device, pressure relief device, pressure monitoring device) before removing the on-load tap-changer head cover.

► Do not operate any electrical devices during the work (e.g. risk of sparks from impact wrench).

NOTICE

Damage to the on-load tap-changer!

Small parts in the oil compartment may block the diverter switch insert, thereby damaging the on-load tap-changer.

► Ensure that parts do not fall into the oil compartment.

► Check that all small parts are accounted for.

1. Ensure that the inspection window is sealed off with the cover.

2. Remove the screws and washers from the on-load tap-changer head cover.

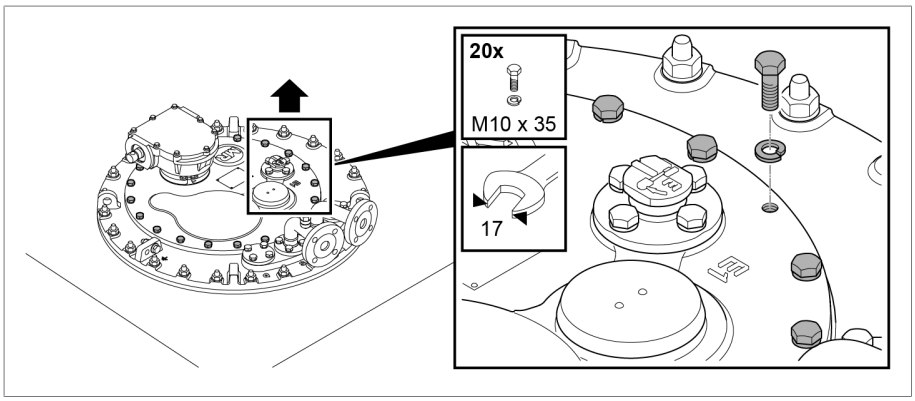

Figure 86: On-load tap-changer head cover

3. Lift off the on-load tap-changer head cover.

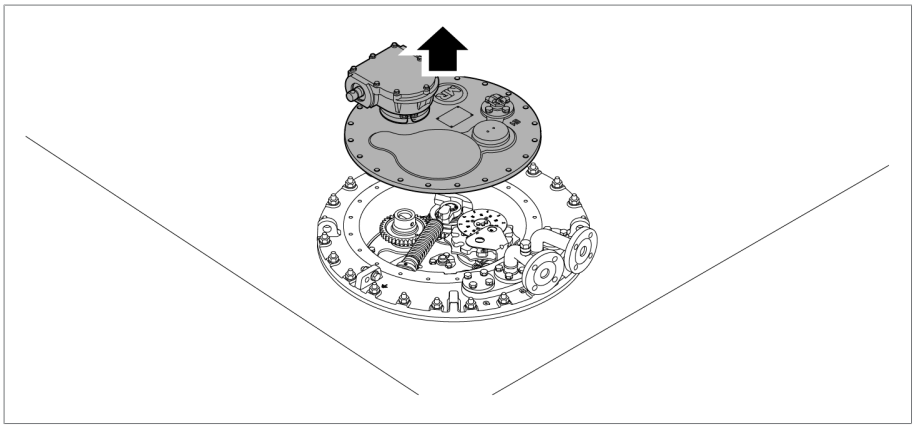

Figure 87: On-load tap-changer head cover

5.3.5.1.3 Drying the on-load tap-changer

NOTICE

Damage to the on-load tap-changer head cover and on-load tap-changer accessories.

Both the on-load tap-changer head cover and the on-load tap-changer accessories will become damaged if they are dried in an autoclave.

► Keep the on-load tap-changer head cover and the following accessories outside the autoclave and never dry them with the on-load tap-changer: motor-drive unit, drive shaft, protective relay, pressure monitoring device, pressure relief device, bevel gear, temperature sensor, oil filter unit.

1. Heat up the on-load tap-changer in air at atmospheric pressure with a temperature increase of approximately 10 °C/h to a final temperature of maximum 110 °C.
2. Pre-dry the on-load tap-changer in circulating air at a maximum temperature of 110 °C for a period of at least 20 hours.

3. Vacuum-dry on-load tap-changer at between 105 °C and maximum 125 °C for at least 50 hours.
4. Residual pressure of no more than 10^{-3} bar.

5.3.5.1.4 Securing on-load tap-changer head cover

NOTICE

Damage to the on-load tap-changer!

A missing or damaged o-ring as well as unclean sealing surfaces lead to insulating fluid escaping and therefore to damage to the on-load tap-changer.

- ► Ensure that the o-ring is positioned untwisted in the on-load tap-changer head cover.
- ► Ensure that the o-ring does not become damaged when mounting the cover.
- ► Ensure that the sealing surfaces on the on-load tap-changer head cover and on-load tap-changer head are clean.

1. Align the on-load tap-changer head cover in such a way that the red triangular markings on the on-load tap-changer head and the on-load tap-changer head cover are aligned.

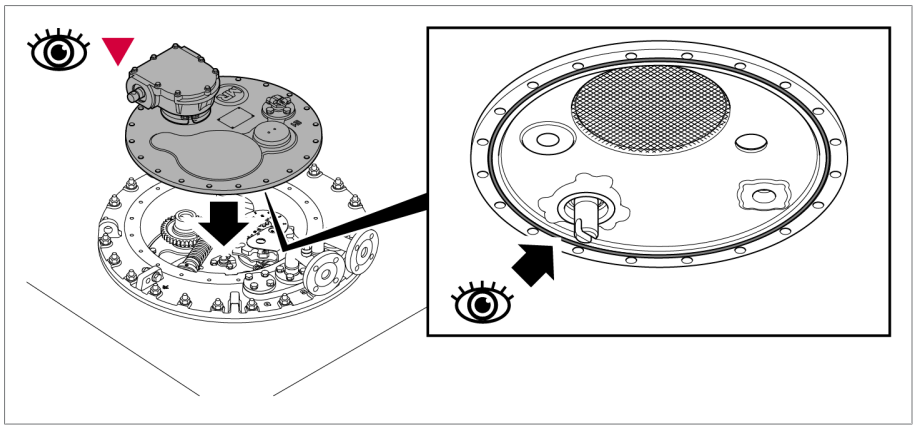

Figure 88: On-load tap-changer head cover

2. Screw the on-load tap-changer head cover onto the on-load tap-changer head.

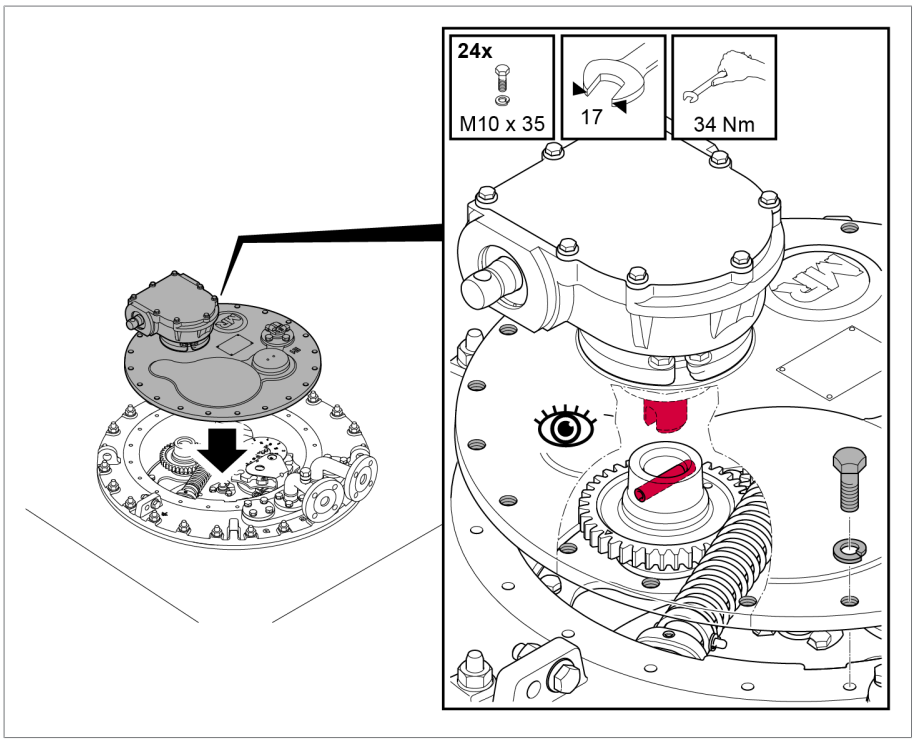

Figure 89: On-load tap-changer head cover

5.3.5.2 Vapor-phase drying in the autoclave

To dry the on-load tap-changer with kerosene in the autoclave, proceed as follows.

If you wish to perform another transformer ratio test after drying, proceed as described in the section "Performing transformer ratio test following drying" [▶ Section 5.3.10, Page 146].

5.3.5.2.1 Moving on-load tap-changer to adjustment position

► Move the on-load tap-changer into the adjustment position (see supplied connection diagram of the on-load tap-changer).

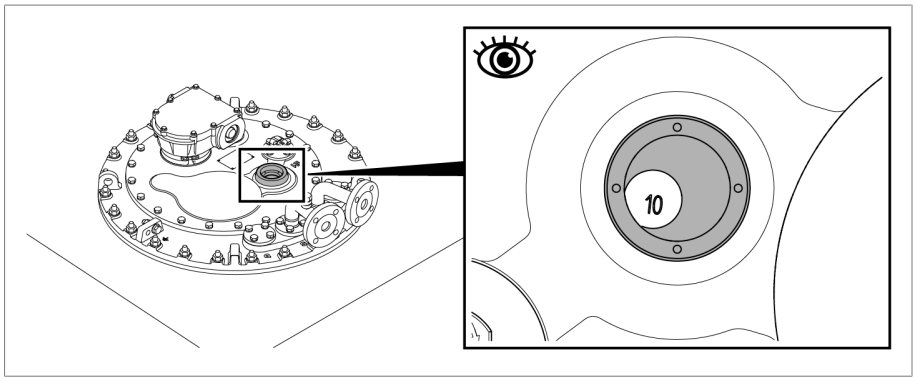

Figure 90: Adjustment position

5.3.5.2.2 Removing on-load tap-changer head cover

⚠ WARNING

Danger of explosion!

Explosive gases under the on-load tap-changer head cover can deflagrate or explode and result in severe injury or death.

► Ensure that there are no ignition sources such as open flames, hot surfaces or sparks (e.g. caused by the build-up of static charge) in the immediate surroundings and that none occur.

► De-energize all auxiliary circuits (for example tap-change supervisory device, pressure relief device, pressure monitoring device) before removing the on-load tap-changer head cover.

► Do not operate any electrical devices during the work (e.g. risk of sparks from impact wrench).

NOTICE

Damage to the on-load tap-changer!

Small parts in the oil compartment may block the diverter switch insert, thereby damaging the on-load tap-changer.

► Ensure that parts do not fall into the oil compartment.

► Check that all small parts are accounted for.

1. Ensure that the inspection window is sealed off with the cover.

2. Remove the screws and washers from the on-load tap-changer head cover.

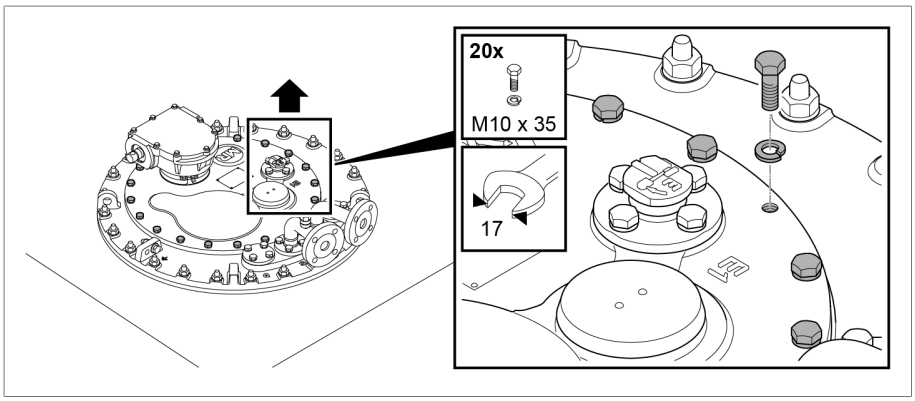

Figure 91: On-load tap-changer head cover

3. Lift off the on-load tap-changer head cover.

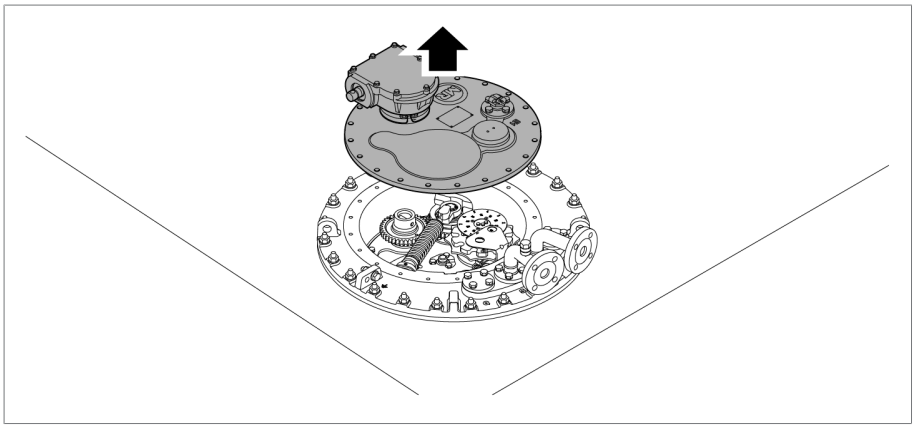

Figure 92: On-load tap-changer head cover

5.3.5.2.3 Opening kerosene drain plug

► **NOTICE!** Unscrew kerosene drain plug between oil compartment base and selector gear clockwise until it starts to offer resistance to turning. Never unscrew the kerosene drain plug all the way.

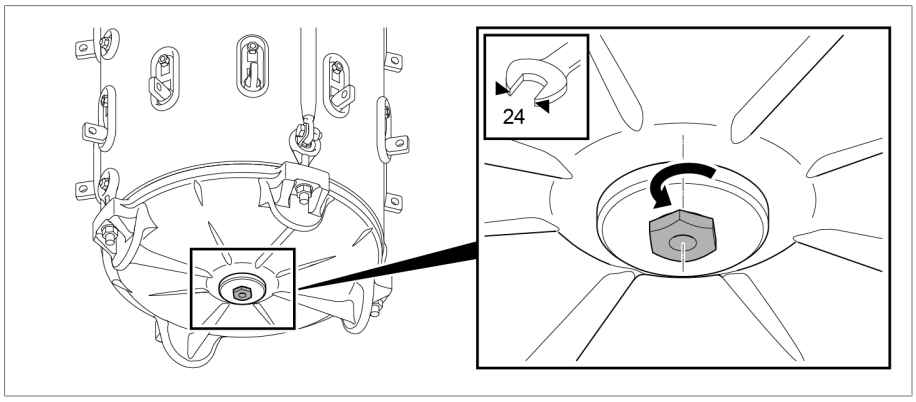

Figure 93: Kerosene drain plug

5.3.5.2.4 Drying the on-load tap-changer

NOTICE

Damage to the on-load tap-changer head cover and on-load tap-changer accessories.

Both the on-load tap-changer head cover and the on-load tap-changer accessories will become damaged if they are dried in an autoclave.

► Keep the on-load tap-changer head cover and the following accessories outside the autoclave and never dry them with the on-load tap-changer: motor-drive unit, drive shaft, protective relay, pressure monitoring device, pressure relief device, bevel gear, temperature sensor, oil filter unit.

1. Supply kerosene vapor at a temperature of around 90°C. Keep this temperature constant for 3 to 4 hours.
2. Increase the kerosene vapor temperature by approx. 10°C/hour to the desired final temperature of max. 125°C at the on-load tap-changer.
3. Vacuum-dry on-load tap-changer at between 105°C and maximum 125°C for at least 50 hours.
4. Residual pressure of no more than 10^{-3} bar.

5.3.5.2.5 Closing kerosene drain plug

► **NOTICE!** Close kerosene drain plug (tightening torque 39 Nm). An open kerosene drain plug leads to insulating fluid escaping from the oil compartment and therefore to damage to the on-load tap-changer and transformer.

5.3.5.2.6 Securing on-load tap-changer head cover

NOTICE

Damage to the on-load tap-changer!

A missing or damaged o-ring as well as unclean sealing surfaces lead to insulating fluid escaping and therefore to damage to the on-load tap-changer.

- ► Ensure that the o-ring is positioned untwisted in the on-load tap-changer head cover.
- ► Ensure that the o-ring does not become damaged when mounting the cover.
- ► Ensure that the sealing surfaces on the on-load tap-changer head cover and on-load tap-changer head are clean.

1. Align the on-load tap-changer head cover in such a way that the red triangular markings on the on-load tap-changer head and the on-load tap-changer head cover are aligned.

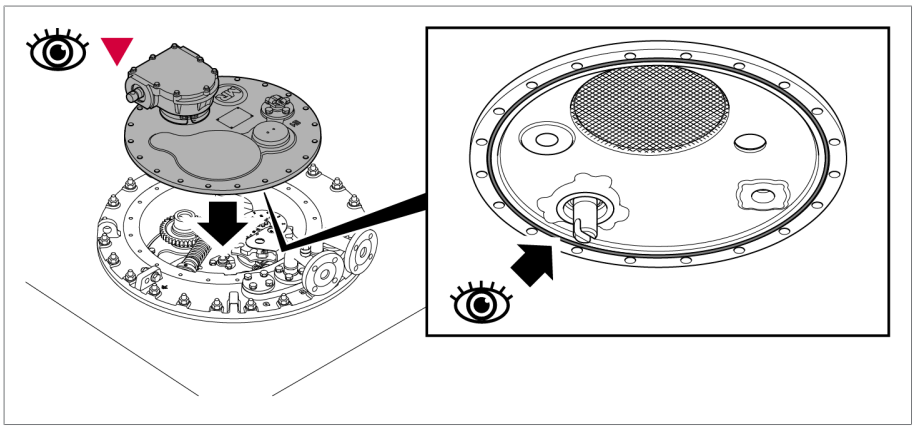

Figure 94: On-load tap-changer head cover

2. Screw the on-load tap-changer head cover onto the on-load tap-changer head.

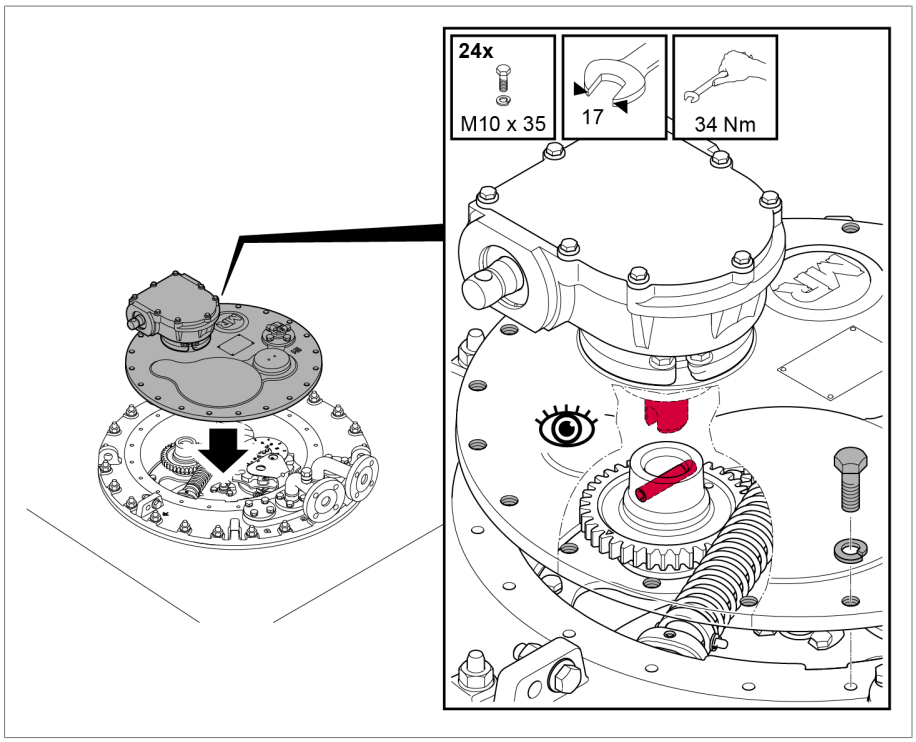

Figure 95: On-load tap-changer head cover

5.3.6 Lifting top part of on-load tap-changer head off supporting flange (bottom part)

5.3.6.1 Moving on-load tap-changer to adjustment position

1. **NOTICE!** Switching without insulating fluid in the oil compartment can lead to damage to the on-load tap-changer. Ensure that the oil compartment of the on-load tap-changer is completely filled with insulating fluid.

2. Move the on-load tap-changer into the adjustment position (see supplied connection diagram of the on-load tap-changer).

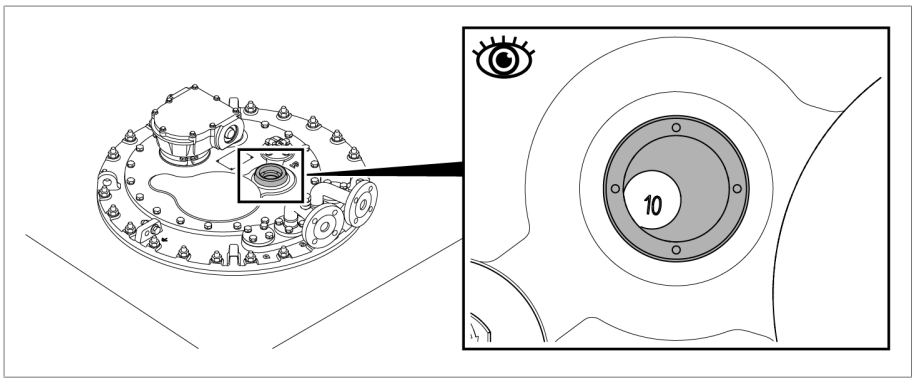

Figure 96: Adjustment position

5.3.6.2 Removing on-load tap-changer head cover

⚠ WARNING

Danger of explosion!

Explosive gases under the on-load tap-changer head cover can deflagrate or explode and result in severe injury or death.

- ► Ensure that there are no ignition sources such as open flames, hot surfaces or sparks (e.g. caused by the build-up of static charge) in the immediate surroundings and that none occur.
- ► De-energize all auxiliary circuits (for example tap-change supervisory device, pressure relief device, pressure monitoring device) before removing the on-load tap-changer head cover.
- ► Do not operate any electrical devices during the work (e.g. risk of sparks from impact wrench).

NOTICE

Damage to the on-load tap-changer!

Small parts in the oil compartment may block the diverter switch insert, thereby damaging the on-load tap-changer.

- ► Ensure that parts do not fall into the oil compartment.
- ► Check that all small parts are accounted for.

1. Ensure that the inspection window is sealed off with the cover.
2. Ensure that the on-load tap-changer is in the adjustment position. The adjustment position is indicated in the on-load tap-changer connection diagram included in delivery.

3. Remove temporary fastening and spacers and slowly lower the on-load tap-changer.

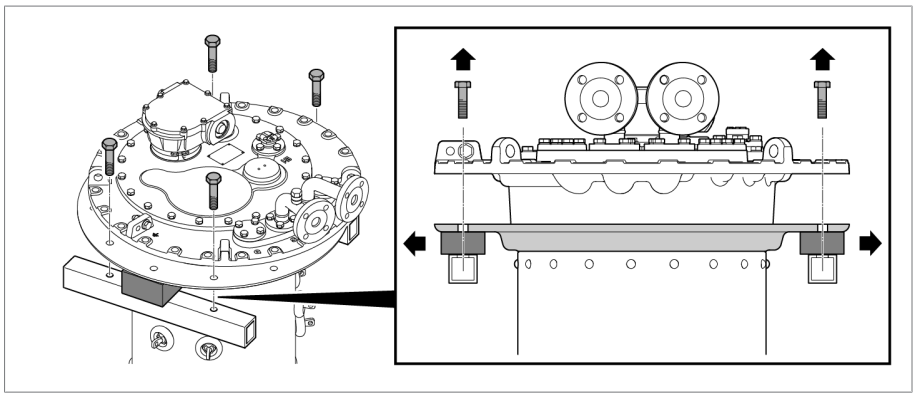

Figure 97: Spacers

4. Remove the screws and washers from the on-load tap-changer head cover.

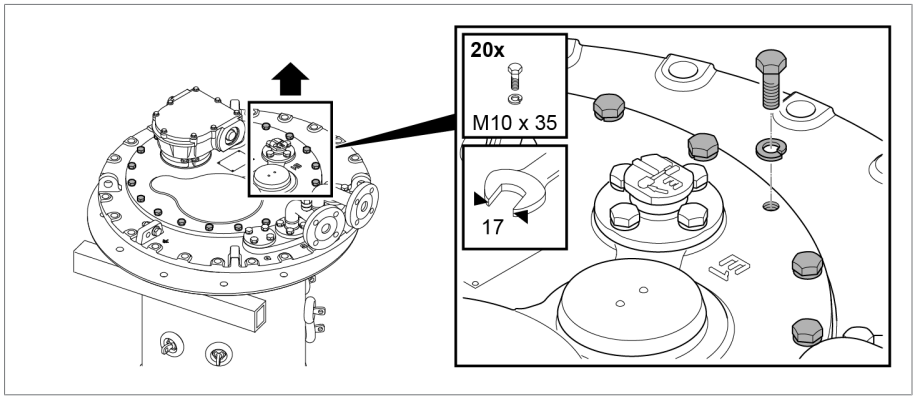

Figure 98: On-load tap-changer head cover

5. Lift off the on-load tap-changer head cover.

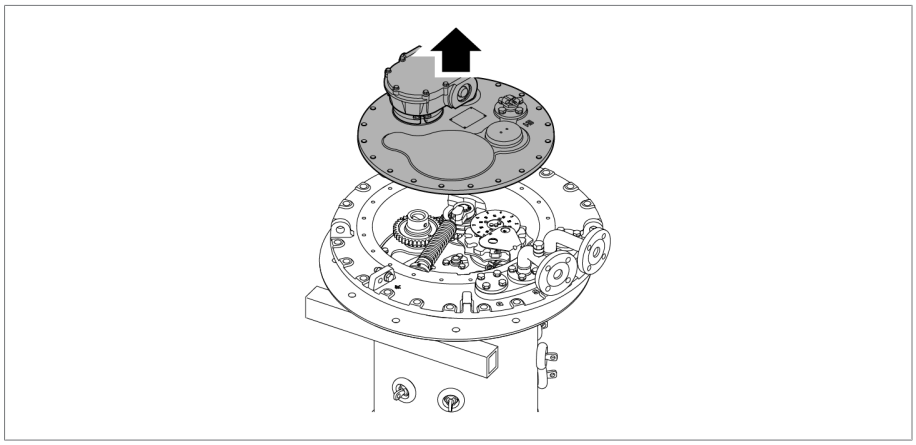

Figure 99: On-load tap-changer head cover

5.3.6.3 Removing the gear unit

► Remove the gear unit. The gear unit supporting plate is attached to the on-load tap-changer head. Use two hands to lift the gear unit up and out. Securely store all removed parts for reinstallation.

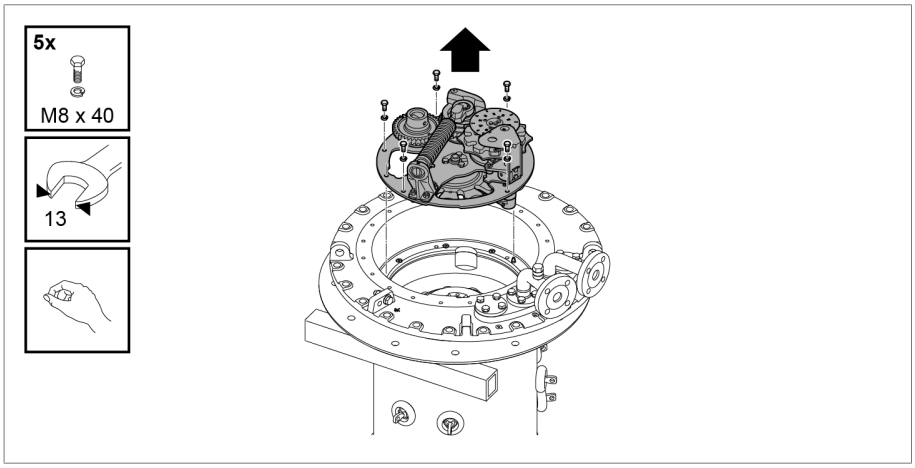

Figure 100: Gear unit supporting plate

5.3.6.4 Lifting top part of on-load tap-changer head off supporting flange

1. Remove nuts and locking elements between top part of on-load tap-changer head and supporting flange.

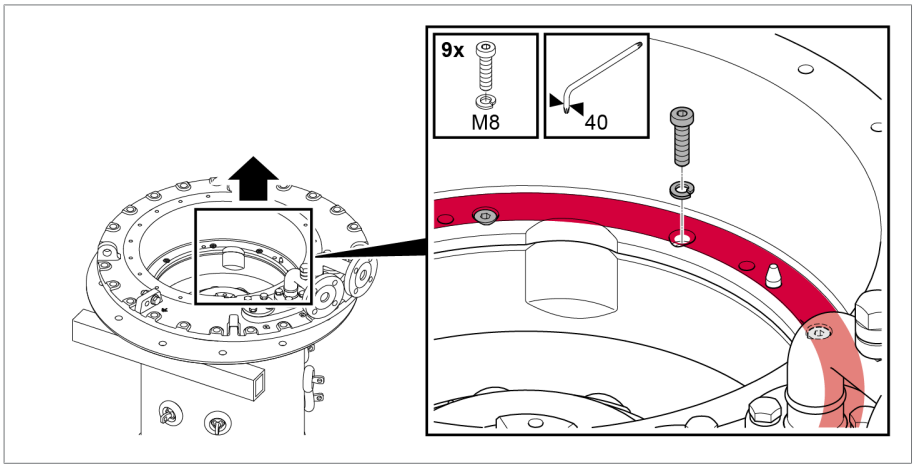

Figure 101: On-load tap-changer head

2. Lift top part of on-load tap-changer head off supporting flange.

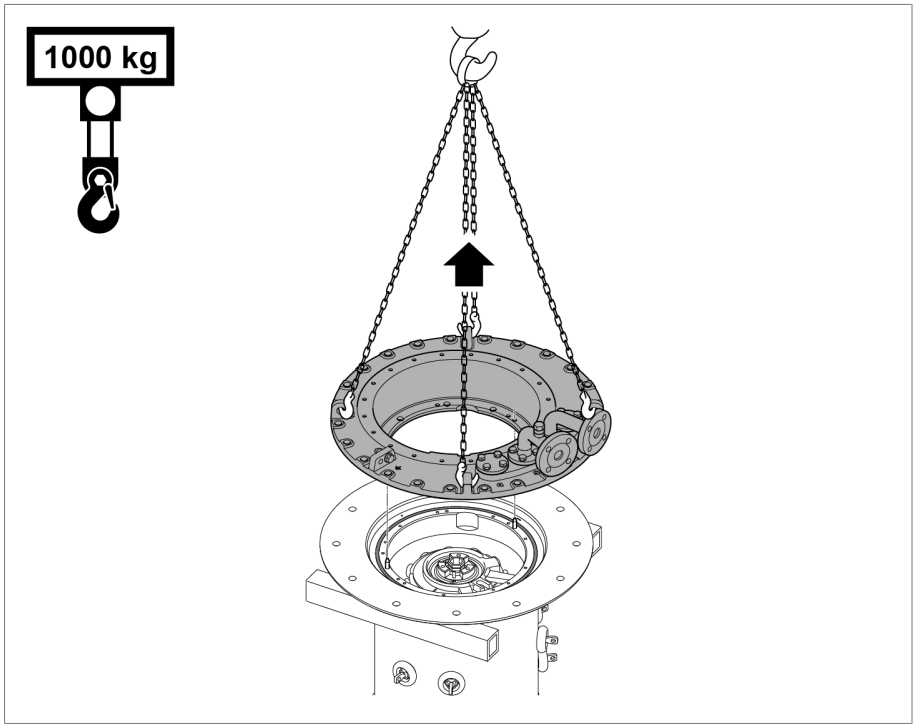

Figure 102: Top part of on-load tap-changer head

5.3.7 Attaching the bell-type tank and connecting the on-load tap-changer to the top part of the on-load tap-changer head

The following chapters explain how to connect the on-load tap-changer to the top part of the on-load tap-changer head once the bell-type tank has been attached.

5.3.7.1 Attaching bell-type tank

1. Clean sealing surface of supporting flange, place o-ring in the groove.

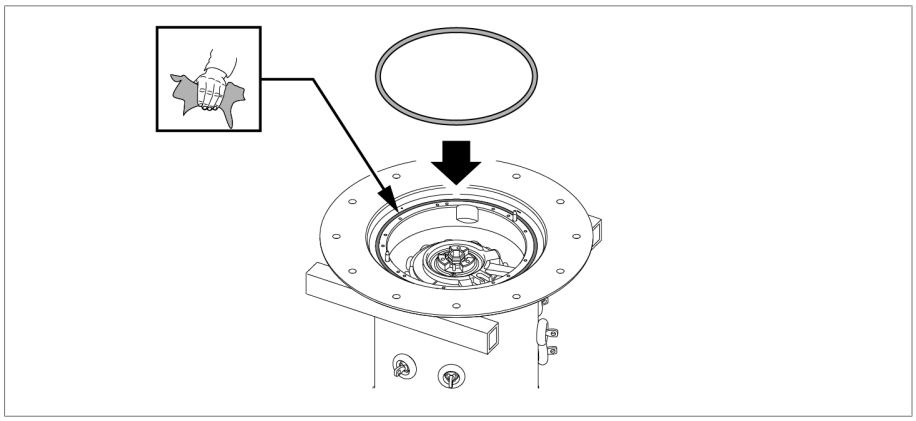

Figure 103: Supporting flange with o-ring

2. Lift the bell-type tank over the active part of the transformer.

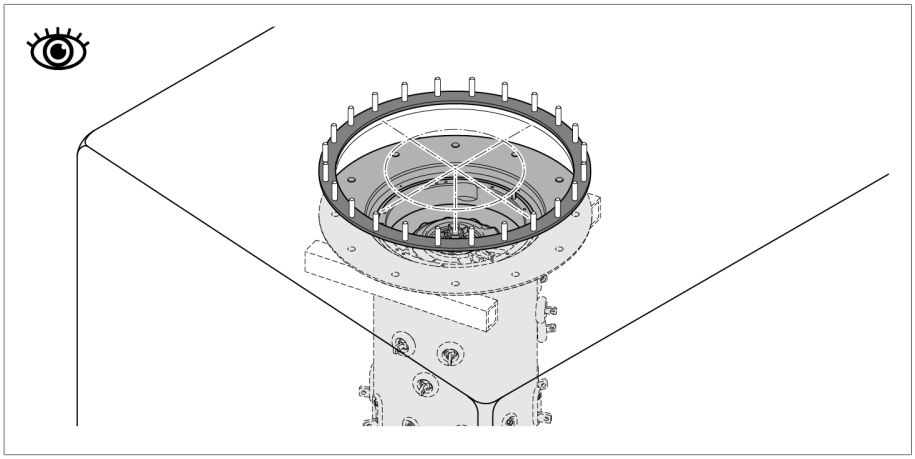

Figure 104: Bell-type tank

5.3.7.2 Positioning top part of on-load tap-changer head on bell-type tank

1. **NOTICE!** Unsuitable gaskets lead to insulating fluid escaping and therefore to damage to the on-load tap-changer. Clean the sealing surfaces on the mounting flange and top part of the on-load tap-changer head. Place a gasket **1** suitable for the insulating fluid used on the mounting flange **2**.

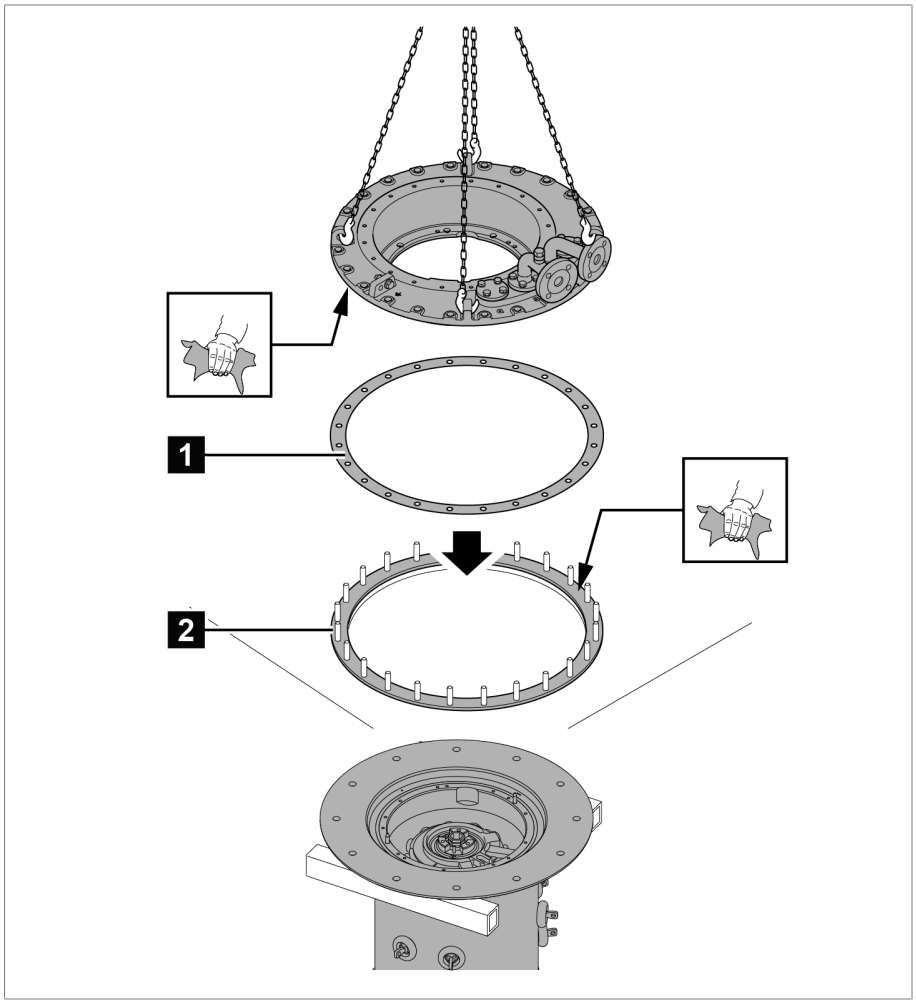

Figure 105: Mounting flange with gasket

2. Lower and position the top part of the on-load tap-changer head on mounting flange so that the triangular markings, pins and mounting holes on the top part and bottom part of the on-load tap-changer head are aligned.

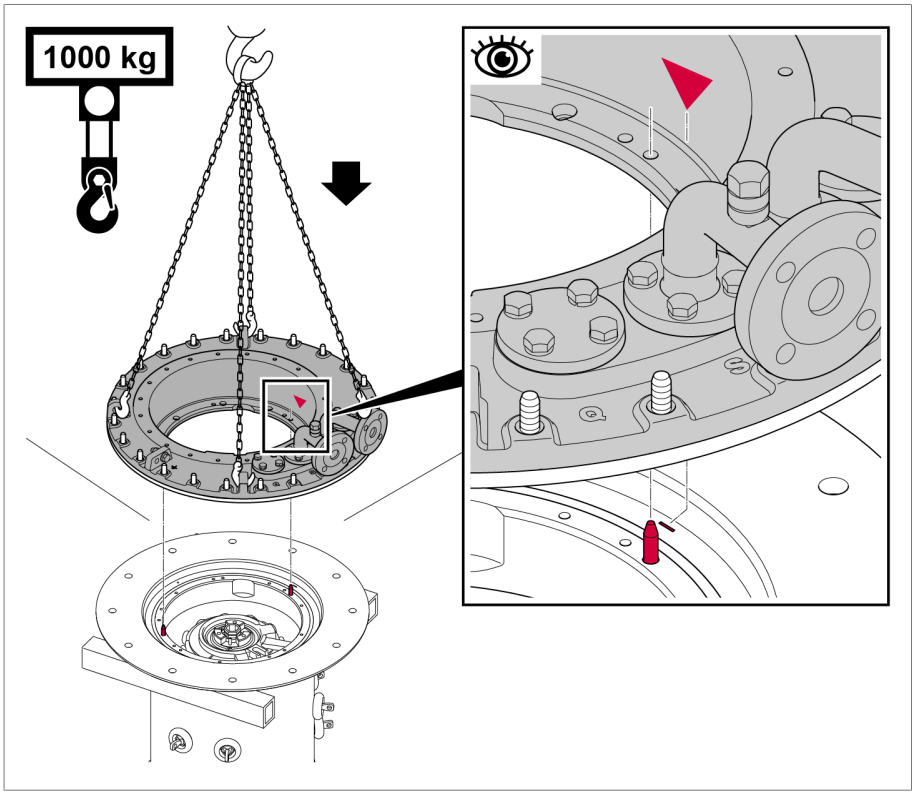

Figure 106: Markings and fitted bolt

5.3.7.3 Connecting on-load tap-changer to top part of on-load tap-changer head

NOTICE

Incorrectly lifting the on-load tap-changer will damage it!

If the bolts of the supporting flange are used to lift the on-load tap-changer, the bolts may be damaged, which makes it impossible to properly screw the on-load tap-changer and the on-load tap-changer head together!

► Always lift the on-load tap-changer using the specified lifting traverse.

1. **NOTICE!** Installing the lifting traverse. Place the lifting traverse to be used onto the top part of the on-load tap-changer head and screw in the 4 screws of the lifting traverse into the bottom part of the on-load tap-changer head.

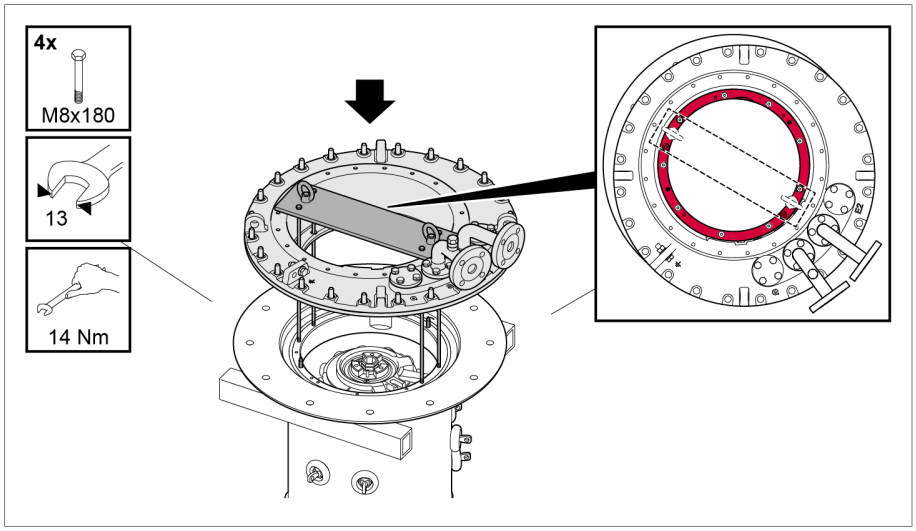

Figure 107: Lifting traverse

2. Secure two ropes of equal length (at least 1 m in length each) to the attachment points provided.
3. **NOTICE!** Inaccurate alignment of on-load tap-changer head to supporting flange will damage the on-load tap-changer when it is lifted. Lift the on-load tap-changer slightly by means of the lifting traverse so that the screws in the on-load tap-changer head (to be secured by spring washers) can be screwed in.

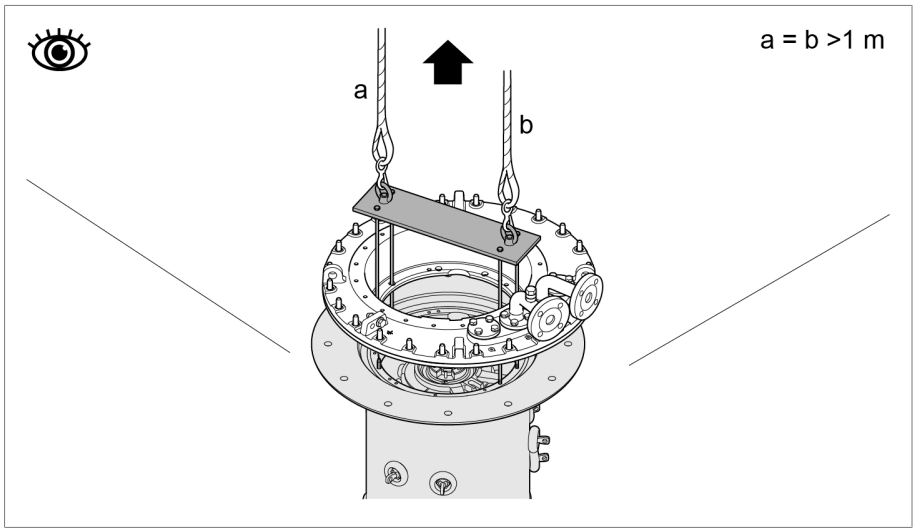

Figure 108: Ropes

4. Screw in the screws. Tighten the screws evenly.

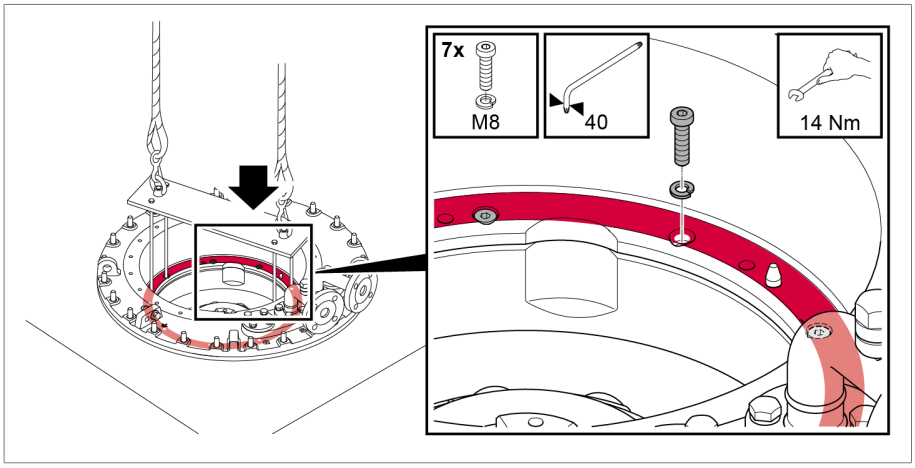

Figure 109: On-load tap-changer

5. Remove the lifting traverse and screw in the remaining 4 screws. Evenly tighten the screws.

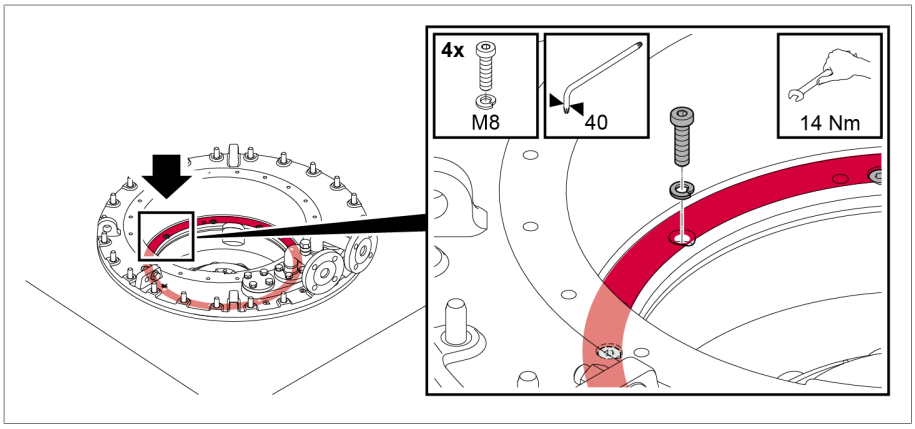

Figure 110: On-load tap-changer head

6. Screw the on-load tap-changer head to the mounting flange. The tightening torque depends on the screw connection elements used.

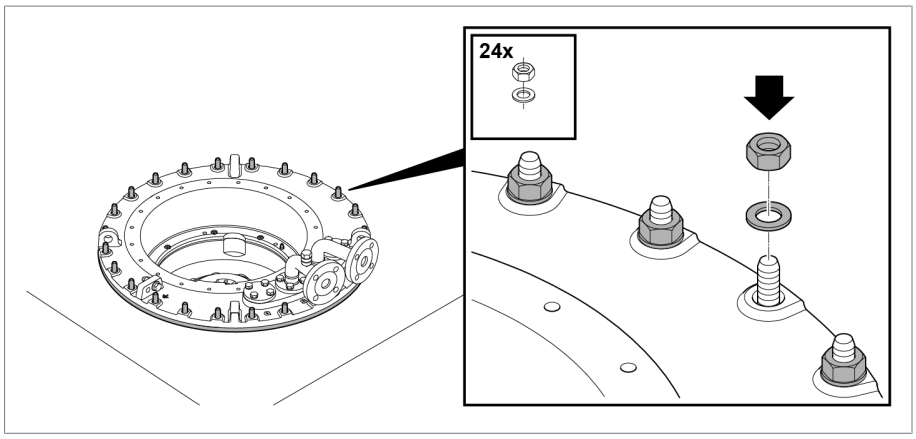

Figure 111: On-load tap-changer head

7. Check that the support rail is in the correct position. Both triangular markings in the on-load tap-changer head and on the support rail must be aligned (also see the adjustment plan).

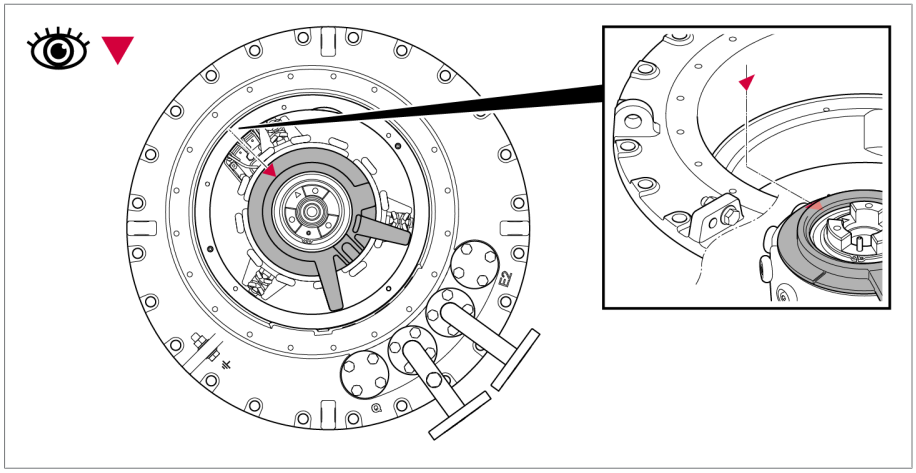

Figure 112: Support rail

8. Ensure that the gear unit is in the adjustment position (see supplied connection diagram of the on-load tap-changer). Install the gear unit. Installation and coupling can be done only in this position. Pay attention to the spring washers.

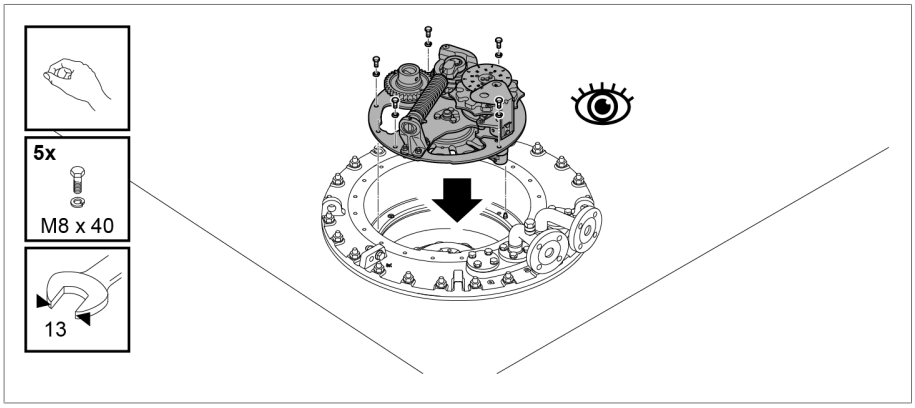

Figure 113: Gear unit supporting plate

5.3.7.4 Securing on-load tap-changer head cover

NOTICE

Damage to the on-load tap-changer!

A missing or damaged o-ring as well as unclean sealing surfaces lead to insulating fluid escaping and therefore to damage to the on-load tap-changer.

- ► Ensure that the o-ring is positioned untwisted in the on-load tap-changer head cover.
- ► Ensure that the o-ring does not become damaged when mounting the cover.
- ► Ensure that the sealing surfaces on the on-load tap-changer head cover and on-load tap-changer head are clean.

1. Align the on-load tap-changer head cover in such a way that the red triangular markings on the on-load tap-changer head and the on-load tap-changer head cover are aligned.

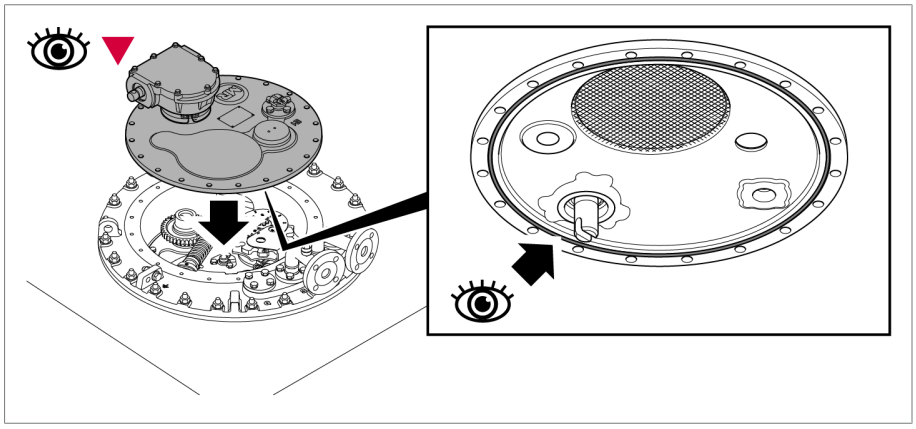

Figure 114: On-load tap-changer head cover

2. Screw the on-load tap-changer head cover onto the on-load tap-changer head.

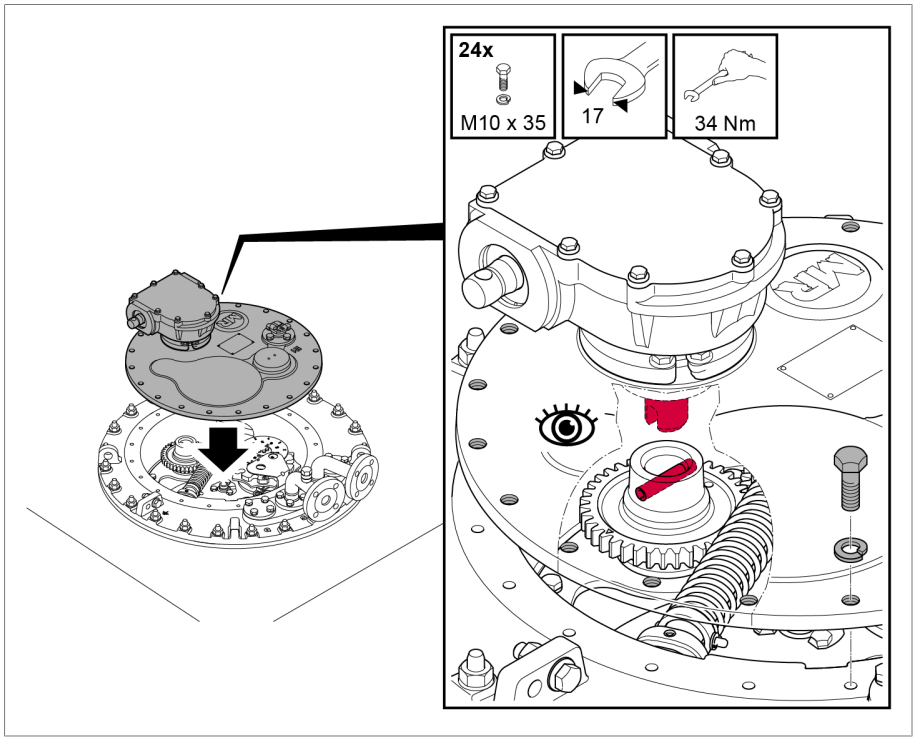

Figure 115: On-load tap-changer head cover

5.3.8 Drying on-load tap-changer in transformer tank

Dry on-load tap-changer in accordance with the following instructions to ensure the dielectric values assured by MR on the on-load tap-changer.

If you want to dry the on-load tap-changer in the transformer tank, fully assemble the transformer first and then undertake drying.

If drying in the transformer tank, the following methods are possible:

- Vacuum-drying
- Vapor-phase drying

As an alternative to drying the on-load tap-changer in the transformer tank, it can also be dried in an autoclave.

5.3.8.1 Vacuum-drying in the transformer tank

Before you start vacuum-drying in the transformer tank, you must place a connecting lead between the corresponding pipe connections and seal off the pipe connections not being used with blank covers.

The on-load tap-changer head cover remains closed during the entire drying process.

1. Establish a connecting lead between either connections E2 and Q or connections E2 and R on the on-load tap-changer head.
2. Seal off unused pipe connections and pipe bends with a suitable blank cover.

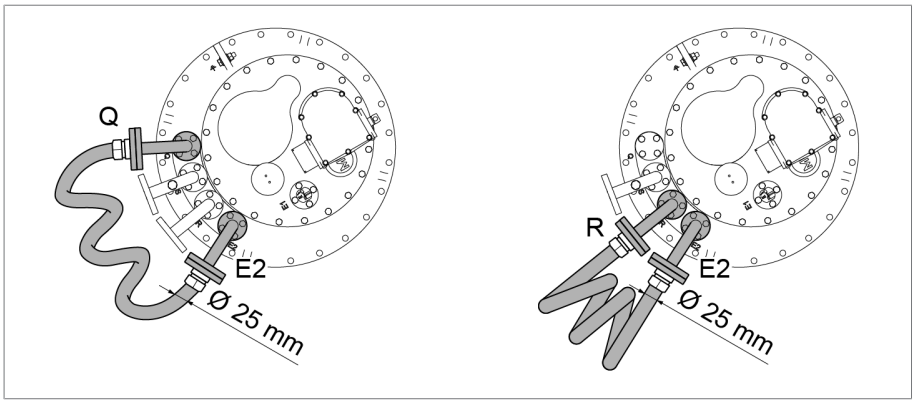

Figure 116: Connecting lead

Vacuum-drying in the transformer tank

1. Heat up the on-load tap-changer in air at atmospheric pressure with a temperature increase of approximately 10 °C/h to a final temperature of maximum 110 °C.
2. Pre-dry the on-load tap-changer in circulating air at a maximum temperature of 110 °C for a period of at least 20 hours.

3. Vacuum-dry on-load tap-changer at between 105 °C and maximum 125 °C for at least 50 hours.
4. Residual pressure of no more than 10^{-3} bar.

5.3.8.2 Vapor-phase drying in the transformer tank

If you have not opened the kerosene drain plug in advance (e.g. after the transformer ratio test), you have to open the kerosene drain plug before the vapor-phase drying process so that the kerosene condensate can drain from the oil compartment.

The kerosene drain plug is located in the oil compartment base and is not accessible with the diverter switch insert installed and the transformer tank closed. For this reason, you first have to remove the diverter switch insert, open the kerosene drain plug, and then install the diverter switch insert again. After the drying process, you have to remove the diverter switch insert again to close the kerosene drain plug.

5.3.8.2.1 Removing diverter switch insert

To remove the diverter switch insert, proceed as follows.

5.3.8.2.1.1 Moving on-load tap-changer to adjustment position

► Move the on-load tap-changer into the adjustment position (see supplied connection diagram of the on-load tap-changer).

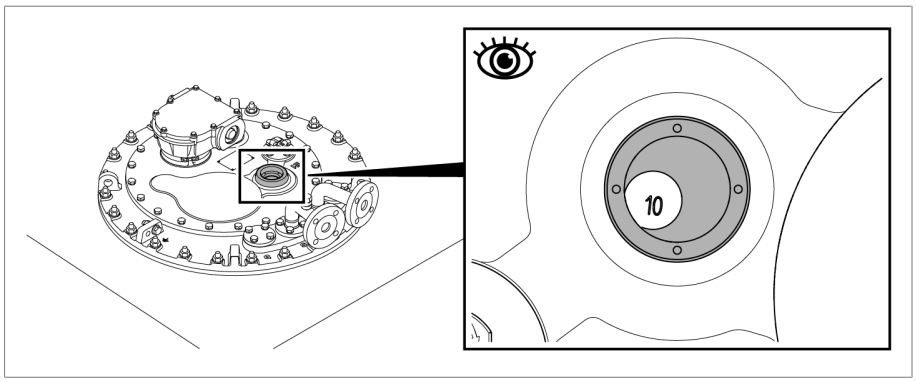

Figure 117: Adjustment position

5.3.8.2.1.2 Removing on-load tap-changer head cover

⚠ WARNING

Danger of explosion!

Explosive gases under the on-load tap-changer head cover can deflagrate or explode and result in severe injury or death.

- ► Ensure that there are no ignition sources such as open flames, hot surfaces or sparks (e.g. caused by the build-up of static charge) in the immediate surroundings and that none occur.
- ► De-energize all auxiliary circuits (for example tap-change supervisory device, pressure relief device, pressure monitoring device) before removing the on-load tap-changer head cover.
- ► Do not operate any electrical devices during the work (e.g. risk of sparks from impact wrench).

NOTICE

Damage to the on-load tap-changer!

Small parts in the oil compartment may block the diverter switch insert, thereby damaging the on-load tap-changer.

- ► Ensure that parts do not fall into the oil compartment.
- ► Check that all small parts are accounted for.

1. Ensure that the inspection window is sealed off with the cover.
2. Remove the screws and washers from the on-load tap-changer head cover.

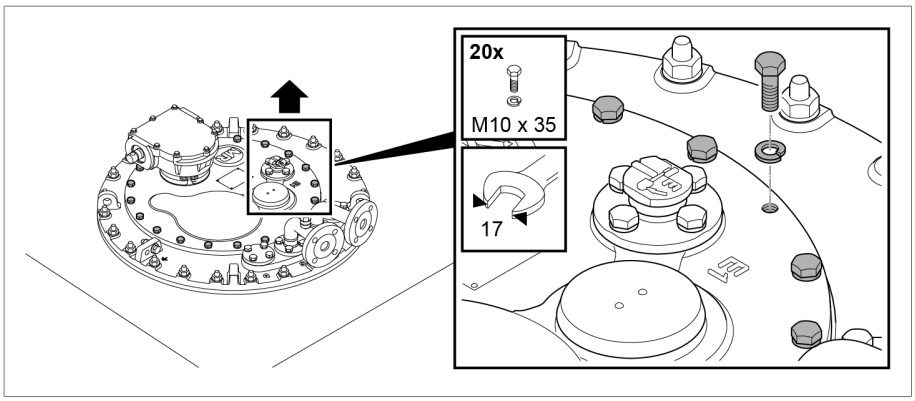

Figure 118: On-load tap-changer head cover

3. Lift off the on-load tap-changer head cover.

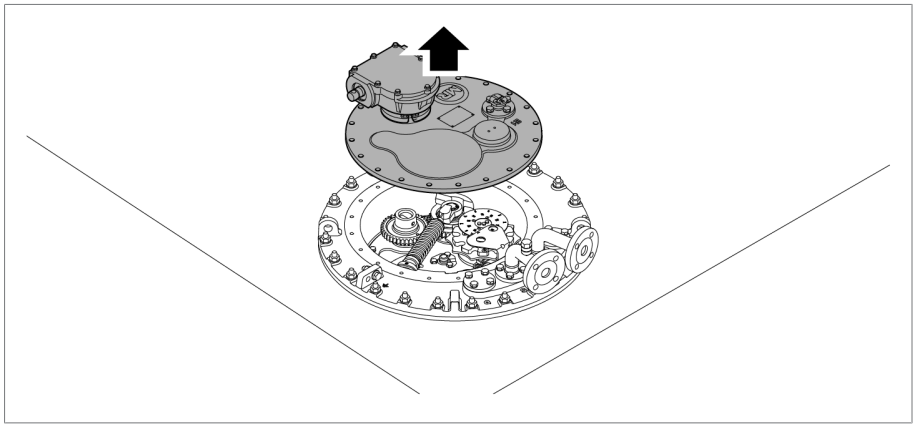

Figure 119: On-load tap-changer head cover

5.3.8.2.1.3 Removing the gear unit

► Remove the gear unit. The gear unit supporting plate is attached to the on-load tap-changer head. Use two hands to lift the gear unit up and out. Securely store all removed parts for reinstallation.

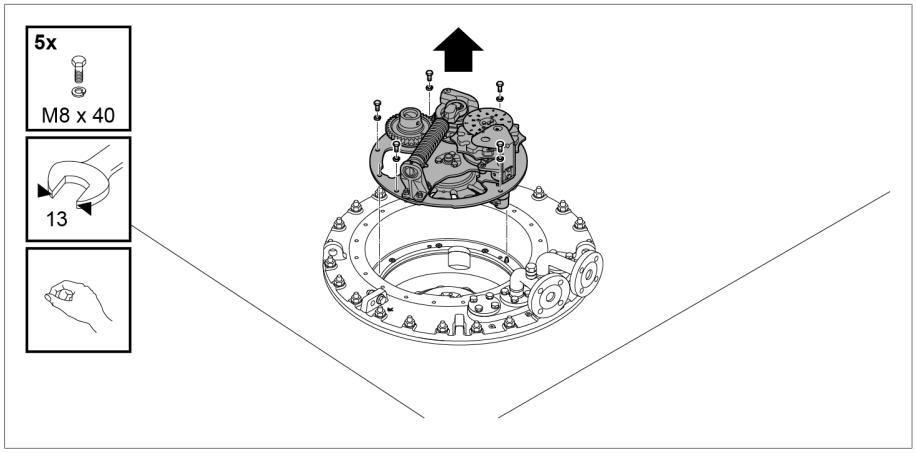

Figure 120: Gear unit supporting plate

5.3.8.2.1.4 Removing the oil suction pipe

The suction pipe centers the on-load tap-changer insert in the bottom bearing at the lower end and has to be pulled out countering the contact pressure.

1. Insert a screwdriver into the top groove of the suction pipe. Lift the suction pipe off upwards using the screwdriver.

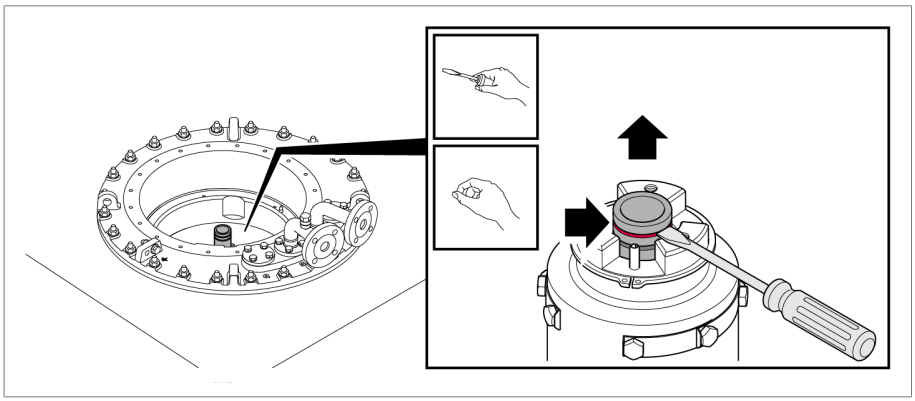

Figure 121: Oil suction pipe

2. Insert the screwdriver into the lower groove and pull the suction pipe up and out vertically by hand.

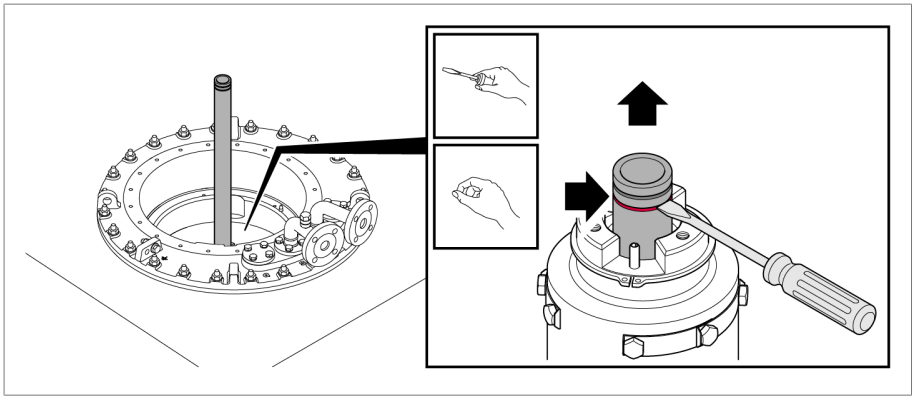

Figure 122: Oil suction pipe

5.3.8.2.1.5 Lifting out the on-load tap-changer insert (OILTAP V without change-over selector)

1. Secure the operating wrench at the coupling of the on-load tap-changer insert.

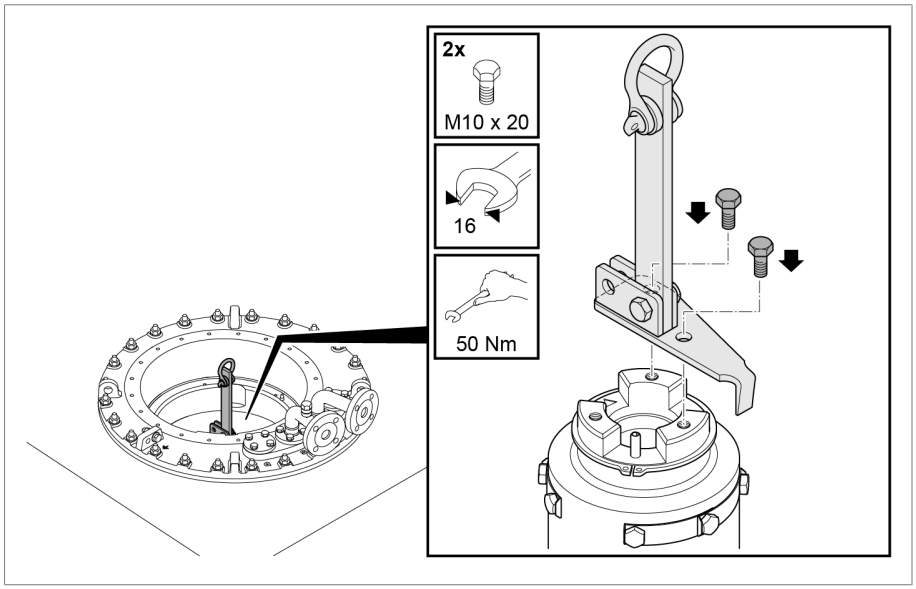

Figure 123: Operating wrench

2. Insert the lifting gear at the operating wrench and slowly lift the on-load tap-changer insert up and out vertically.

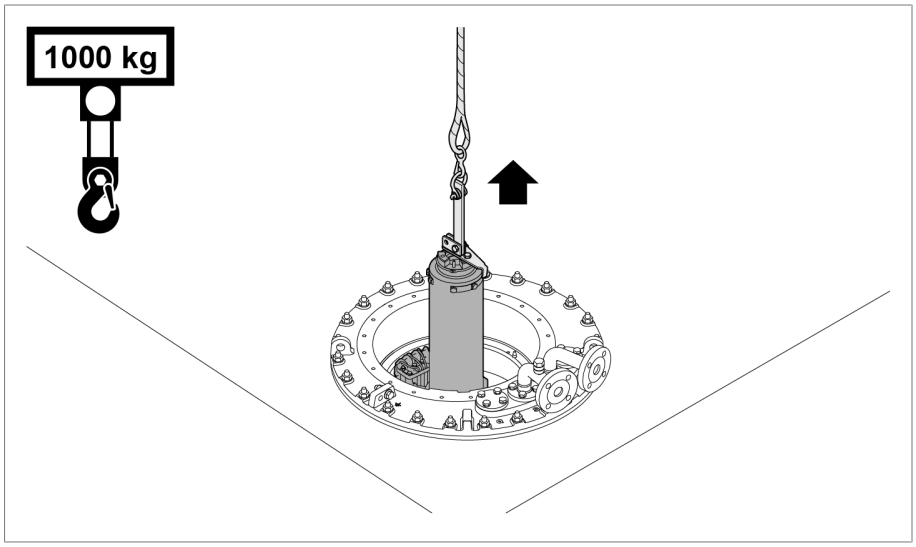

Figure 124: On-load tap-changer insert

3. **⚠ CAUTION!** An unstably positioned on-load tap-changer insert may tip, resulting in injuries and property damage. Place the on-load tap-changer insert on a level surface and secure it against tipping.

5.3.8.2.1.6 Lifting out the on-load tap-changer insert (OILTAP V with change-over selector)

1. Secure the operating wrench at the coupling of the on-load tap-changer insert.

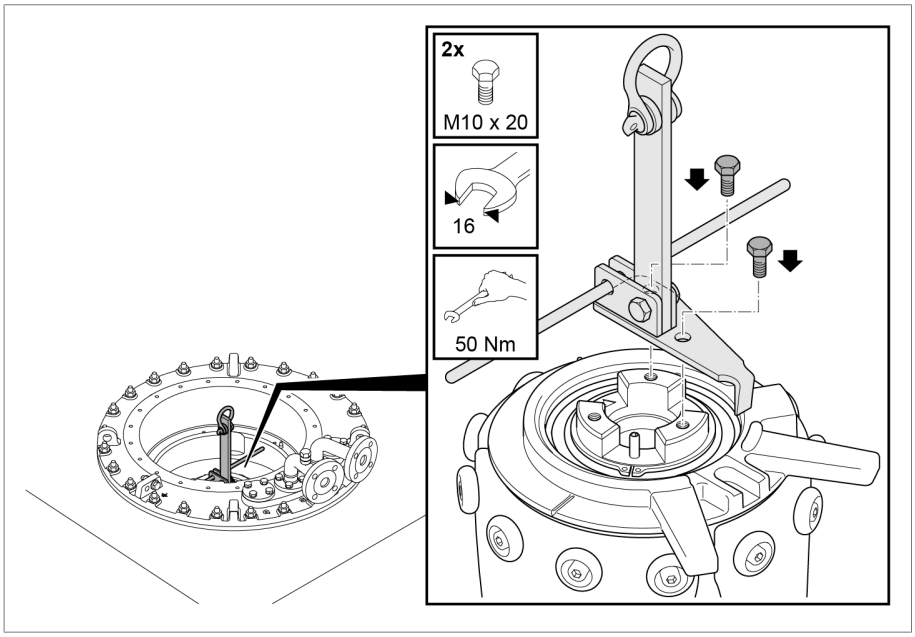

Figure 125: Operating wrench

2. Insert the lug into the notch between the support rails.

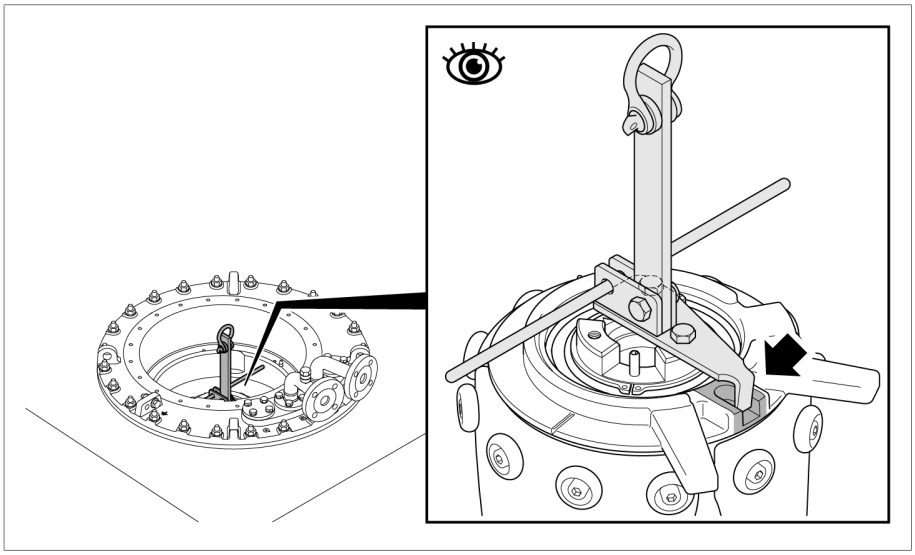

Figure 126: Lug

3. In order to switch off the change-over selector, turn the operating wrench clockwise. The moving contacts of the change-over selector have to be between the fixed contacts of the different phases.

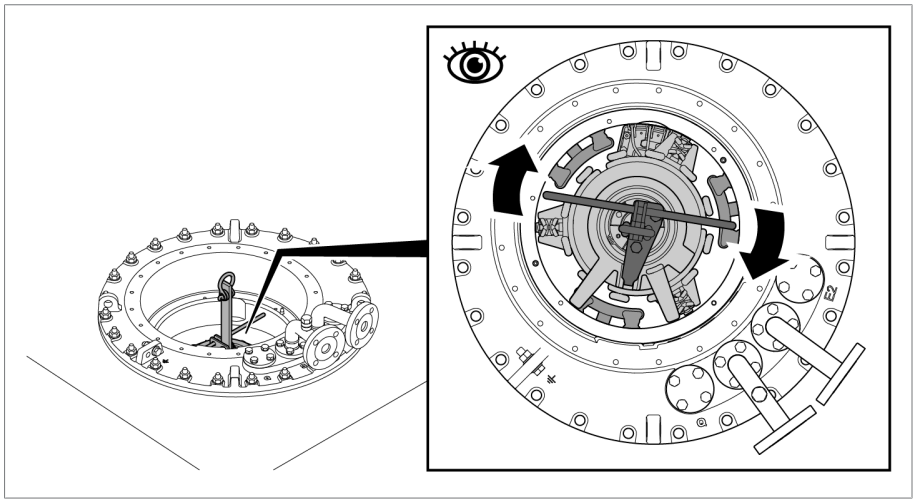

Figure 127: Change-over selector

4. Insert the lifting gear at the operating wrench and slowly lift the on-load tap-changer insert up and out vertically.

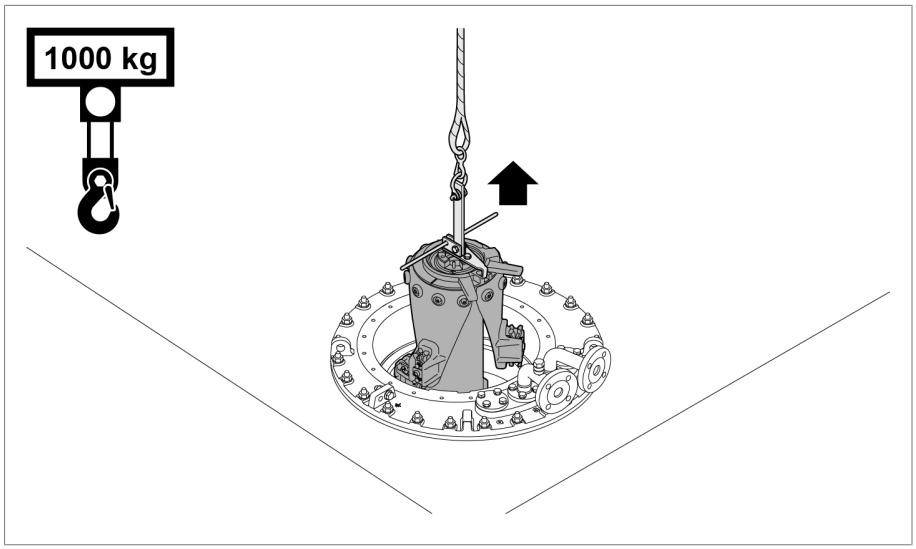

Figure 128: Diverter switch insert

5. ⚠ **CAUTION!** An unstably positioned on-load tap-changer insert may tip, resulting in injuries and property damage. Place the on-load tap-changer insert on a level surface and secure it against tipping.

5.3.8.2.1.7 Lifting out the on-load tap-changer insert (OILTAP V III 500 D, Um=76 kV)

The V III 500 D-40 kV on-load tap-changer insert was provided with and without a change-over selector with upper switching element offset by 180° (phase U) in the years 07/89 to 11/90.

The V III 500 D-76 kV on-load tap-changer insert was also provided with and without a change-over selector with upper switching element offset by 180° (phase U) in the years 07/89 to 05/95.

In order to remove the on-load tap-changer insert, the following requirements must be met:

- The on-load tap-changer is in the adjustment position (see supplied connection diagram of the on-load tap-changer).
- The change-over selector connects 0 and (-)
- The switching elements are at selector switch contact K

In addition, the following components must already be removed:

- On-load tap-changer head cover
- Gear unit
- Suction pipe

In order to remove the on-load tap-changer insert, proceed as follows:

1. Secure the operating wrench at the coupling of the on-load tap-changer insert.

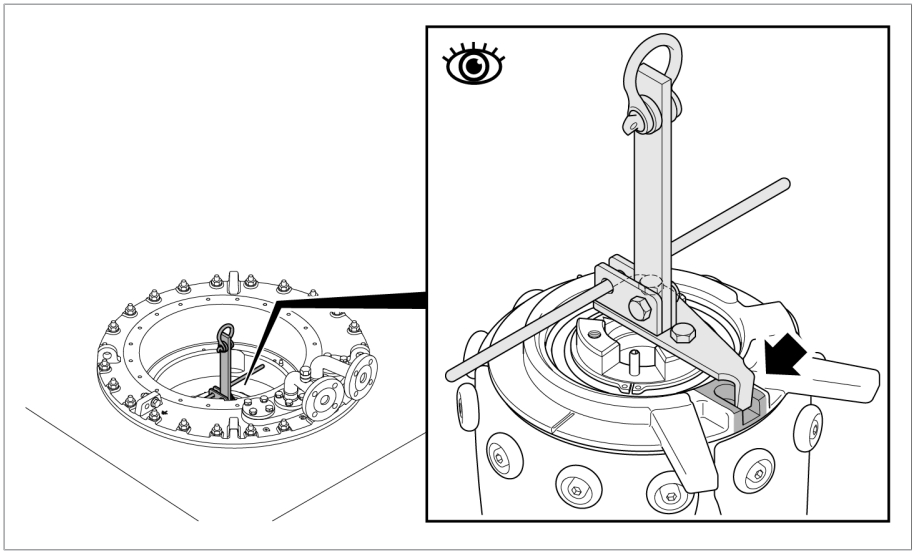

Figure 129: Operating wrench

2. Turn the operating wrench clockwise until the moving contacts of the change-over selector are between the fixed contacts of the change-over selector.

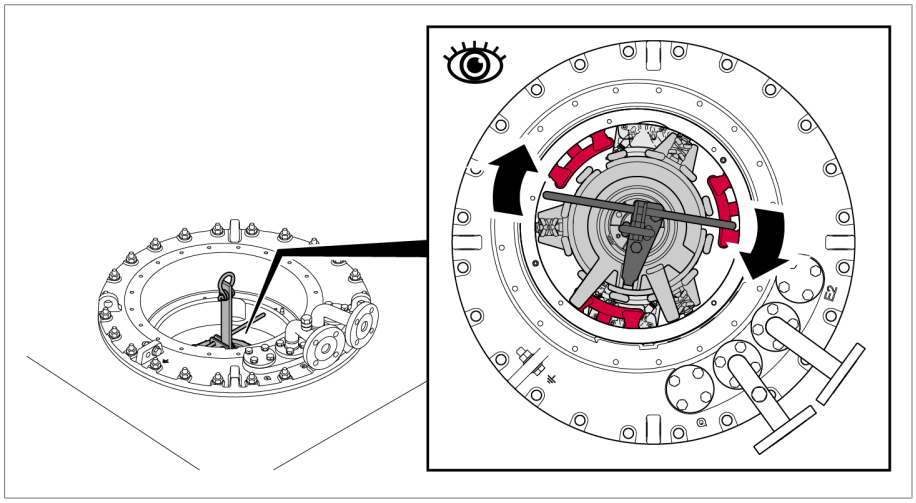

Figure 130: OILTAP V III 500

3. Carefully pull the on-load tap-changer insert upwards vertically until the phase U switching element is directly under the fixed contacts of the change-over selector.

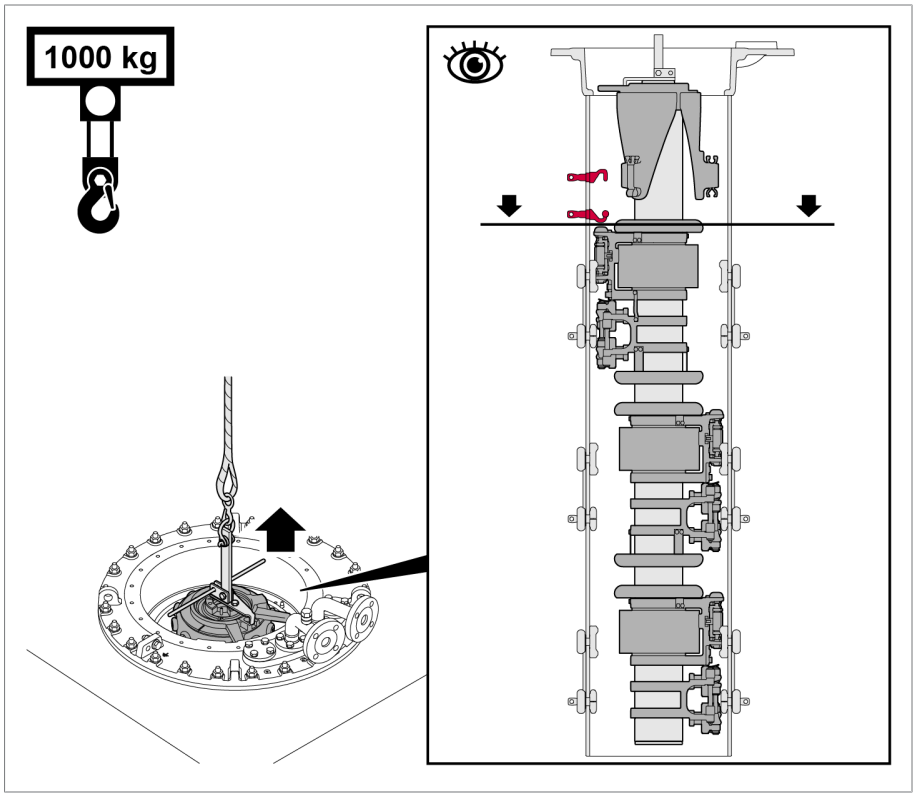

Figure 131: On-load tap-changer insert

4. Turn the operating wrench back to the same angle counterclockwise.

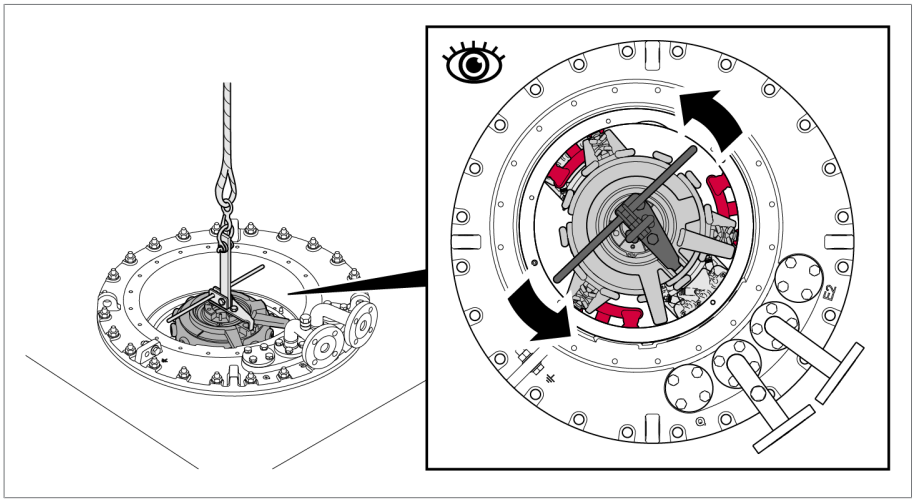

Figure 132: On-load tap-changer insert

5. Carefully pull the on-load tap-changer insert upwards vertically until the phase V switching element is directly under the fixed contacts of the change-over selector.

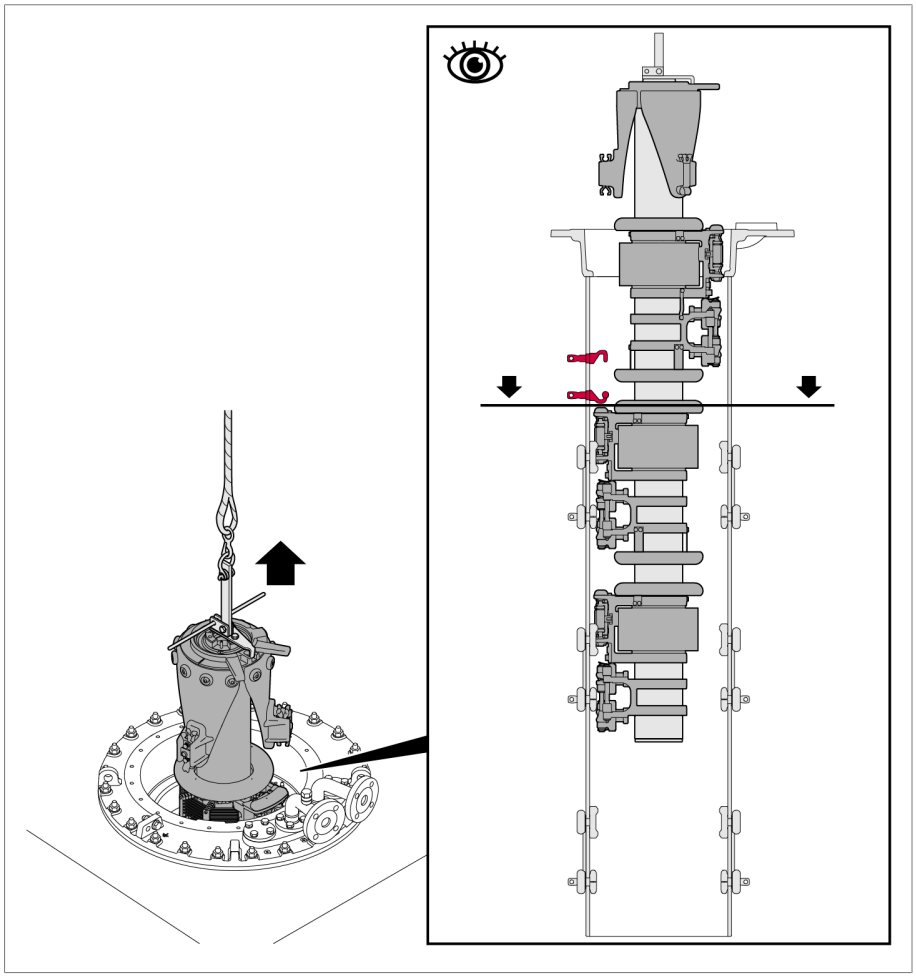

Figure 133: On-load tap-changer insert

6. Turn the operating wrench clockwise once again until the switching elements of phases V and W are between the fixed contacts of the change-over selector.

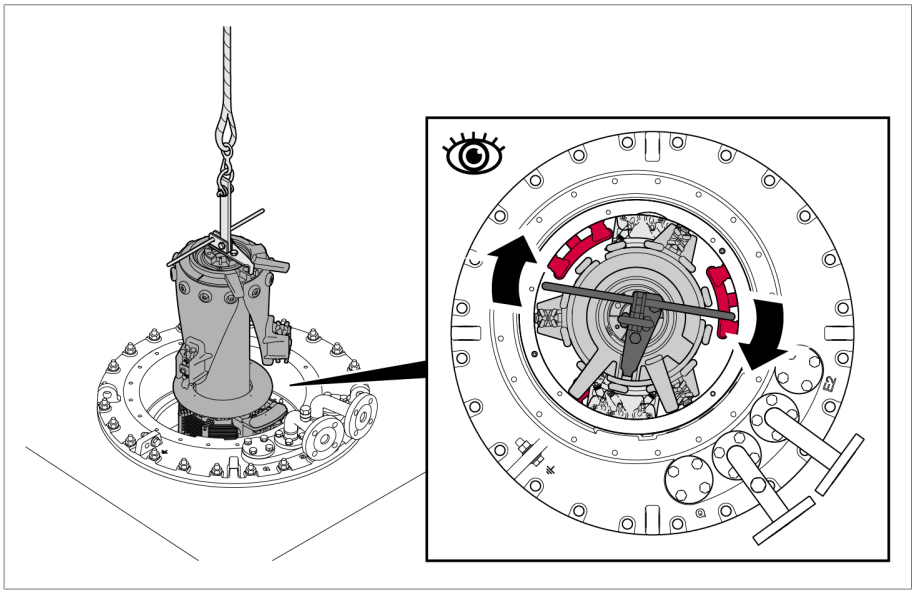

Figure 134: On-load tap-changer insert

7. Lift out the on-load tap-changer insert completely.

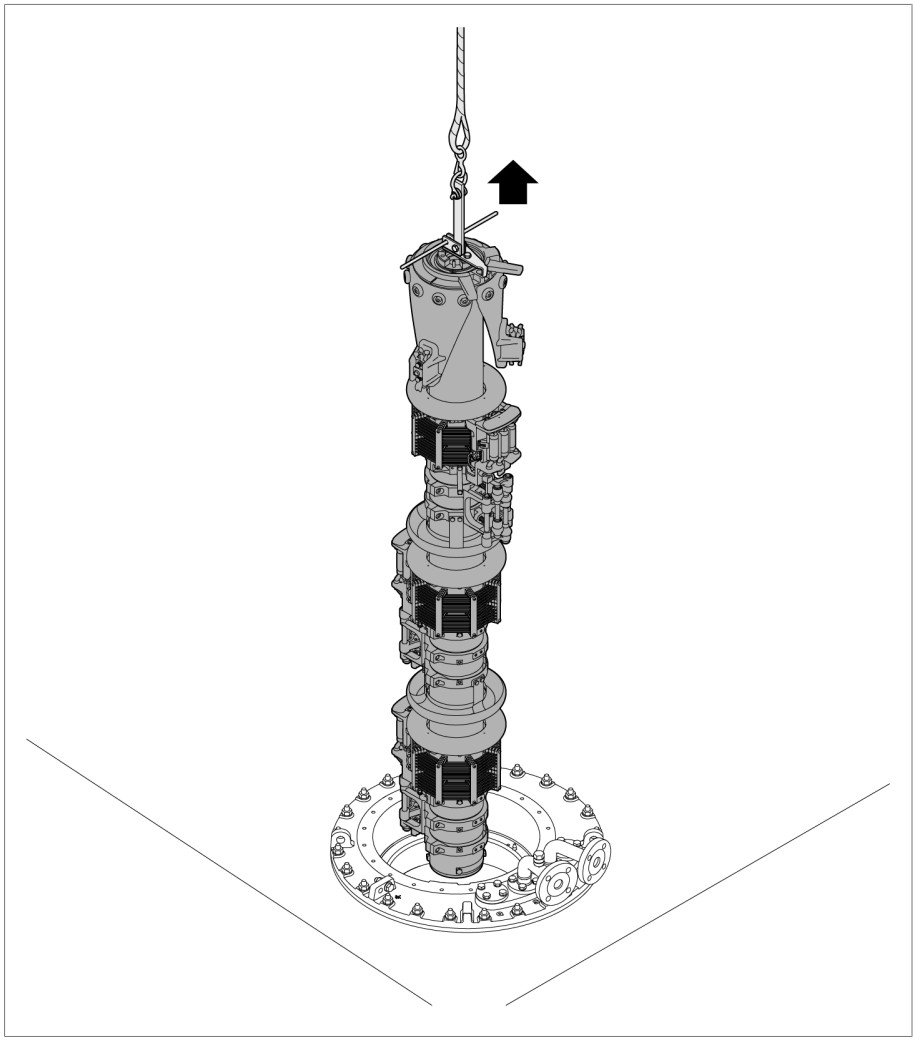

Figure 135: On-load tap-changer insert

5.3.8.2.2 Opening kerosene drain plug

► **NOTICE!** Unscrew the kerosene drain plug in the bottom of the oil compartment until it starts to get hard to turn. Never unscrew the kerosene drain plug all the way.

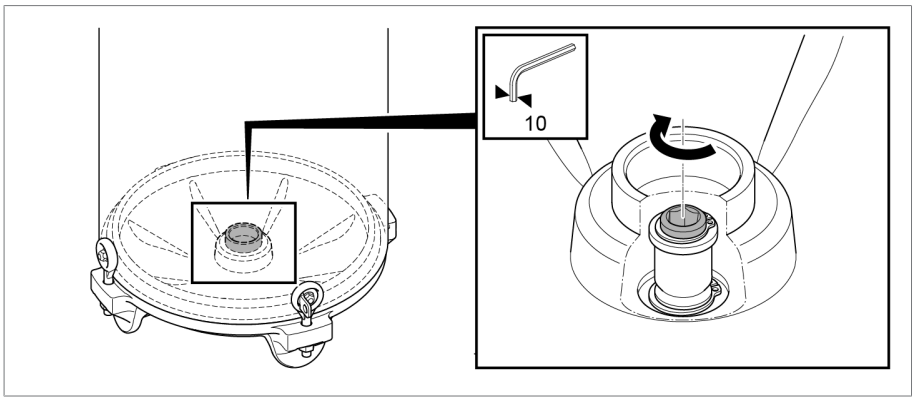

Figure 136: Kerosene drain plug

5.3.8.2.3 Inserting diverter switch insert

Proceed as follows to fit the diverter switch insert.

5.3.8.2.3.1 Inserting the on-load tap-changer insert (OILTAP V without change-over selector)

1. Secure the operating wrench at the coupling of the on-load tap-changer insert.

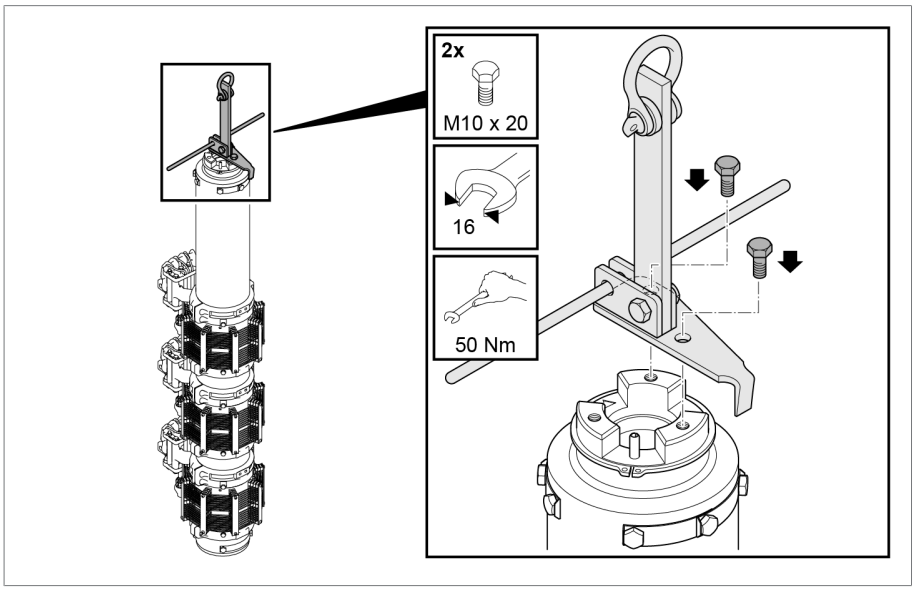

Figure 137: Operating wrench

2. Insert the lifting gear at the operating wrench.

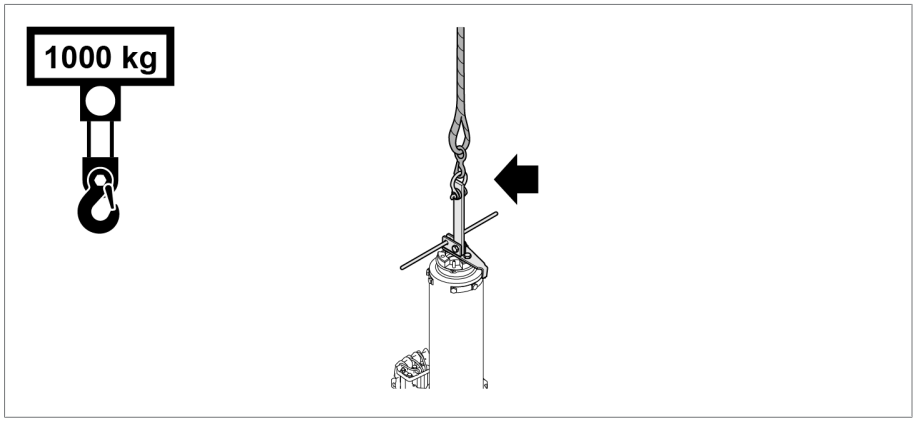

Figure 138: Lifting gear

3. Slowly lower the on-load tap-changer insert.

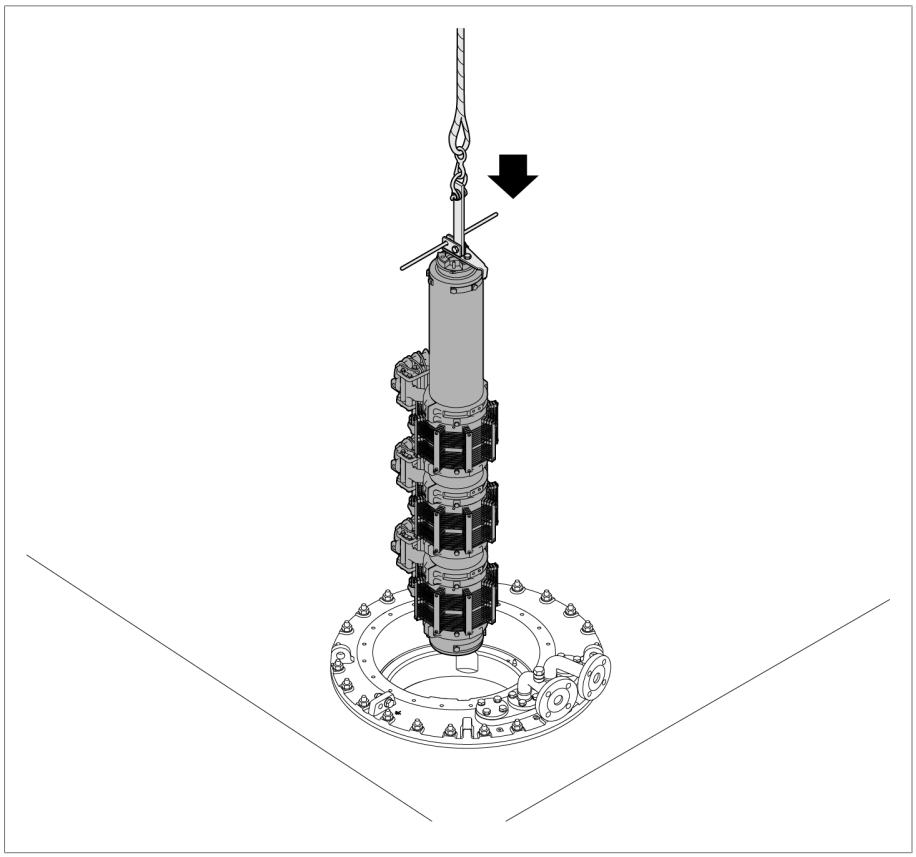

Figure 139: Diverter switch insert

4. Turn the on-load tap-changer insert so that it is approximately in the adjustment position after insertion (see supplied connection diagram of the on-load tap-changer).

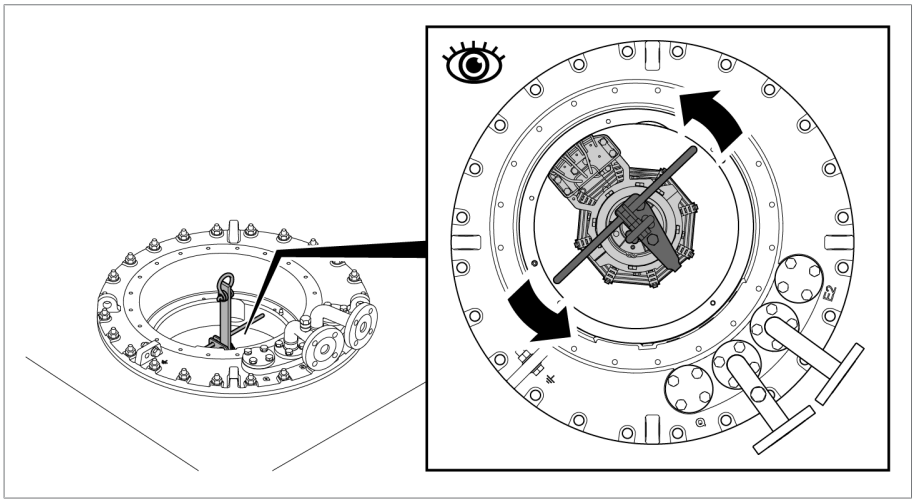

Figure 140: Diverter switch insert

5. Remove the operating wrench.

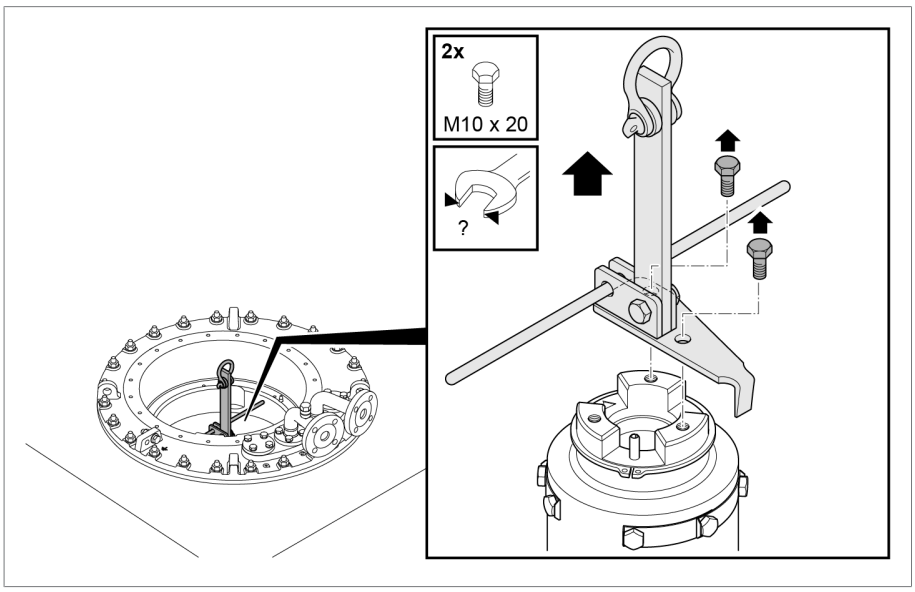

Figure 141: Operating wrench

5.3.8.2.3.2 Inserting the on-load tap-changer insert (OILTAP V with change-over selector)

1. Secure the operating wrench at the coupling of the on-load tap-changer insert.

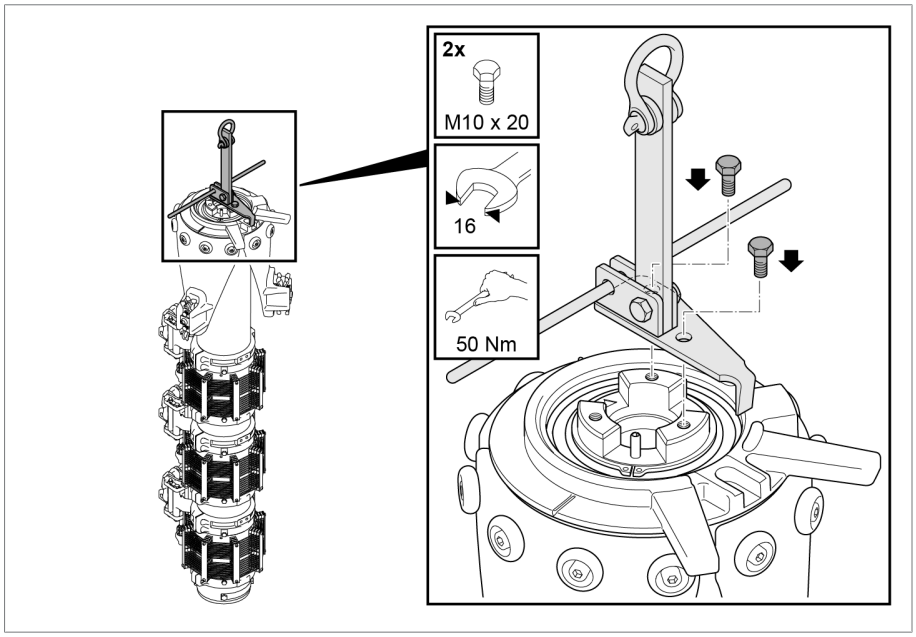

Figure 142: Operating wrench

2. Insert the lifting gear at the operating wrench.

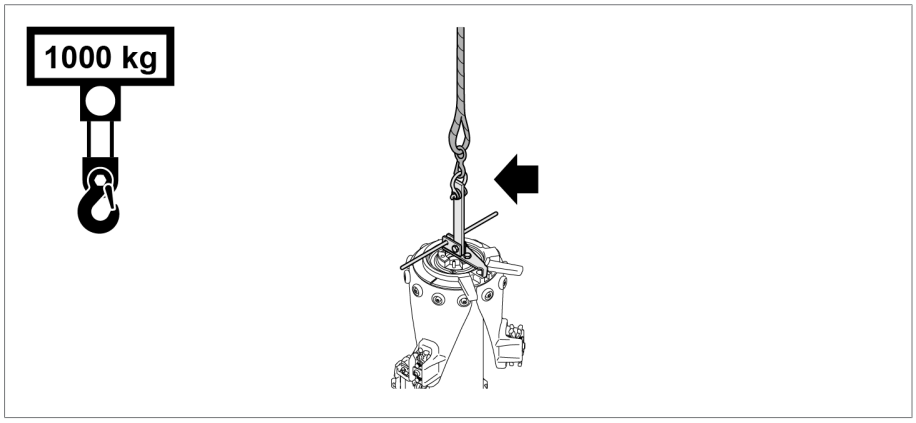

Figure 143: Lifting gear

3. Slowly lower the on-load tap-changer insert.

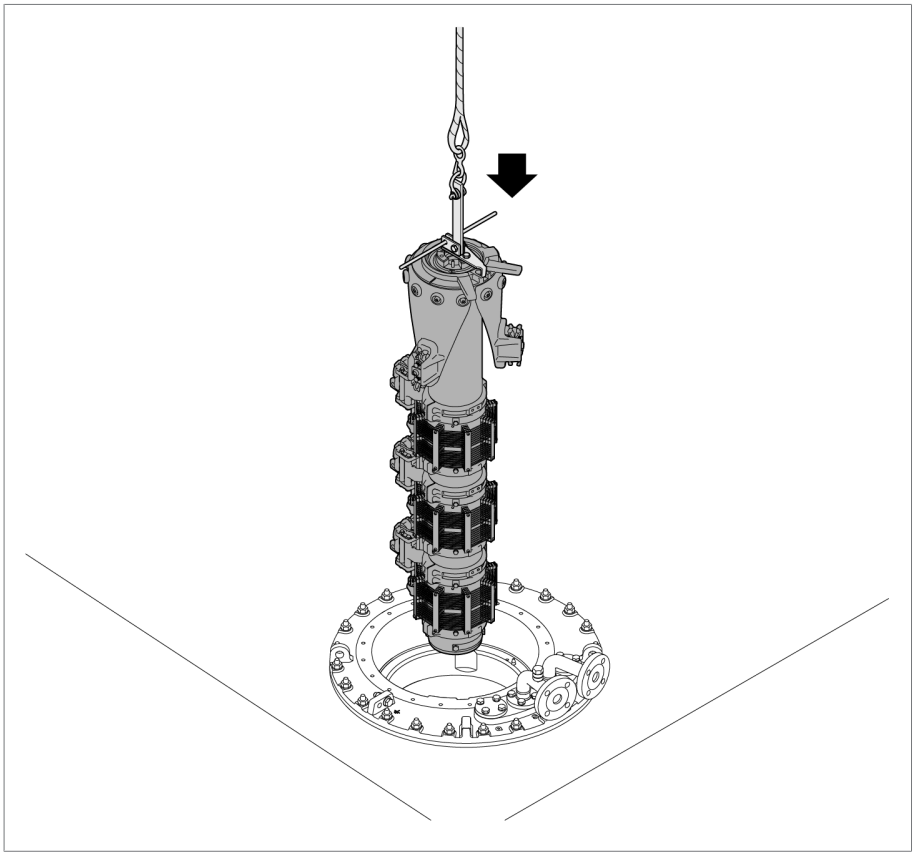

Figure 144: Diverter switch insert

4. Turn the on-load tap-changer insert counterclockwise so that the moving change-over selector contacts are between the fixed change-over selector contacts of the different phases after insertion.

5. Continue turning the on-load tap-changer insert counterclockwise until both triangular markings in the on-load tap-changer head and on the support rails are aligned (also see adjustment plan) and the change-over selector contacts are correctly in the closed position.

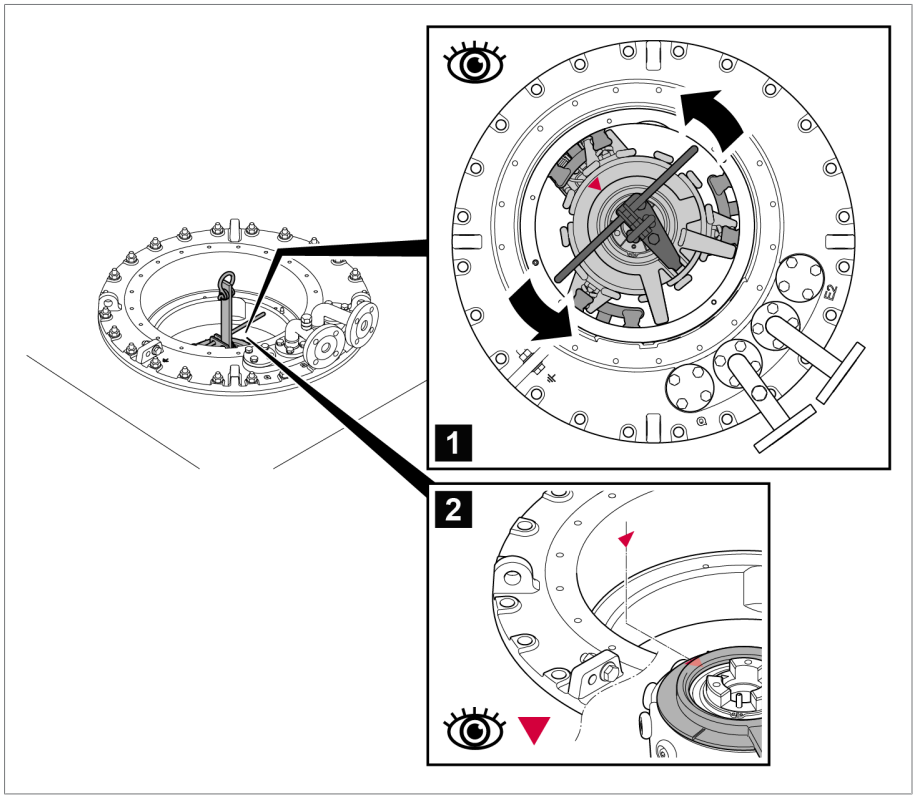

Figure 145: On-load tap-changer insert check

6. Remove the operating wrench.

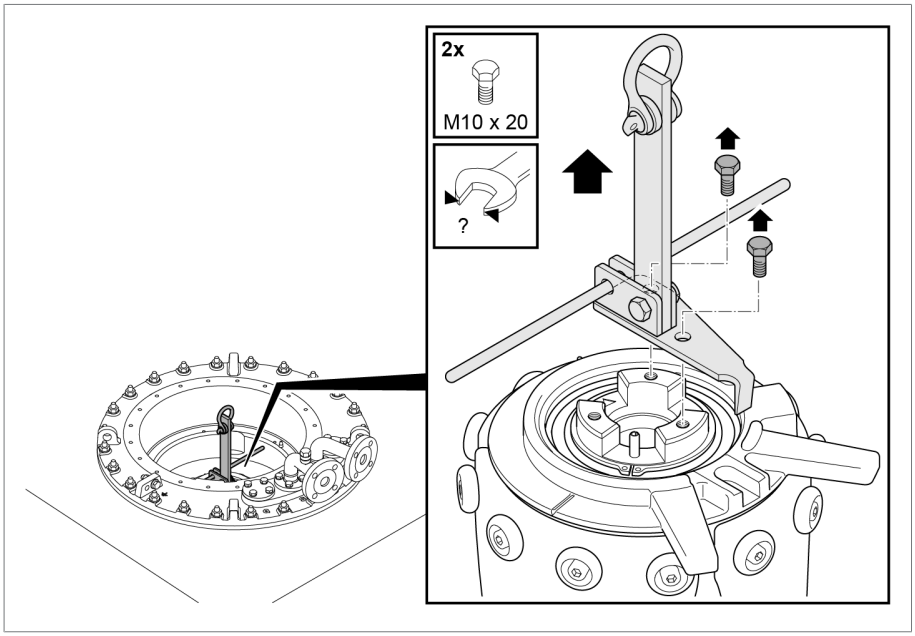

Figure 146: Operating wrench

5.3.8.2.3.3 Inserting the on-load tap-changer insert (OILTAP V III 500 D, Um=76 kV)

The V III 500 D-40 kV on-load tap-changer insert was provided with and without a change-over selector with upper switching element offset by 180° (phase U) in the years 07/89 to 11/90.

The V III 500 D-76 kV on-load tap-changer insert was also provided with and without a change-over selector with upper switching element offset by 180° (phase U) in the years 07/89 to 05/95.

1. Secure the operating wrench at the coupling of the on-load tap-changer insert.

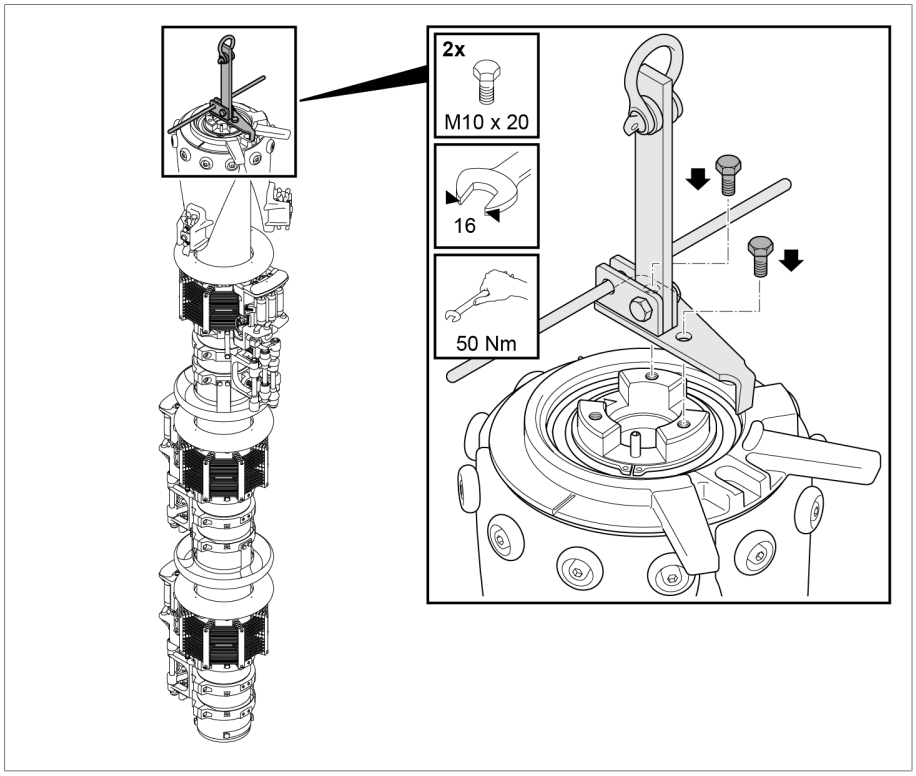

Figure 147: Operating wrench

2. Secure the lifting gear at the operating wrench.

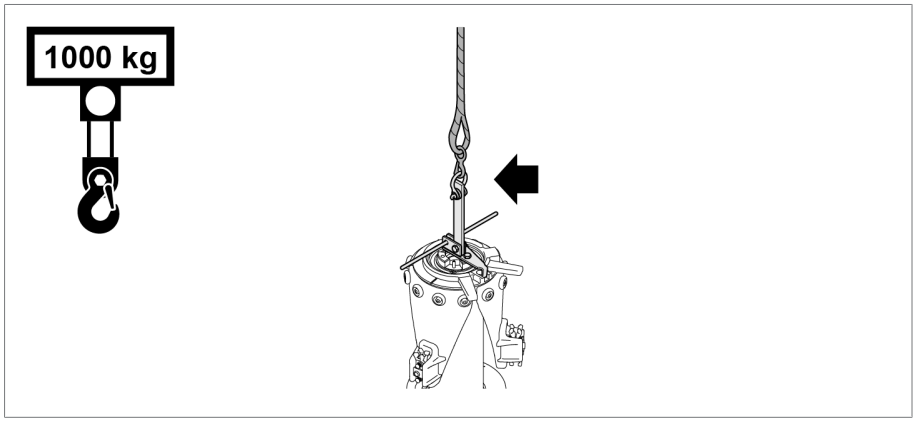

Figure 148: Lifting gear

3. Carefully lower the on-load tap-changer insert vertically. The phase V and W switching elements **1** must be between the fixed contacts **2** of the change-over selector.

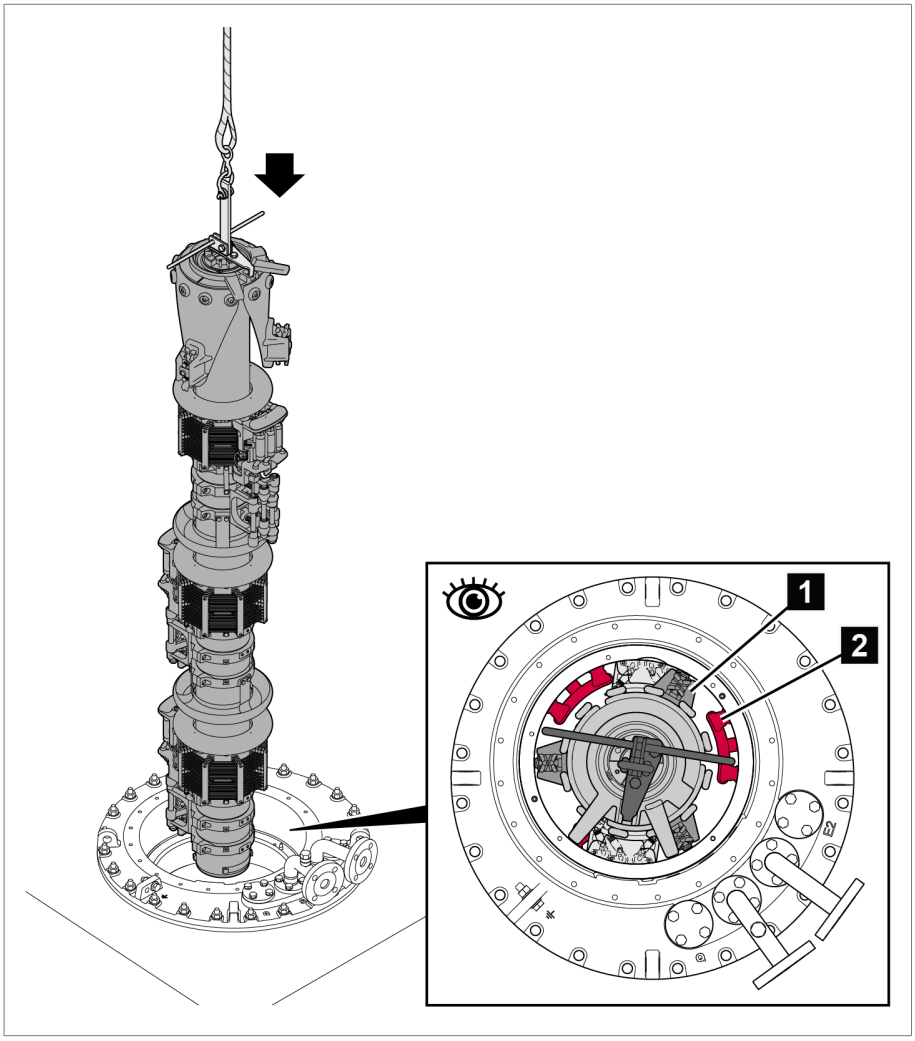

Figure 149: On-load tap-changer insert

4. Carefully lower the on-load tap-changer insert vertically until the phase U switching element is directly over the fixed contacts of the change-over selector.

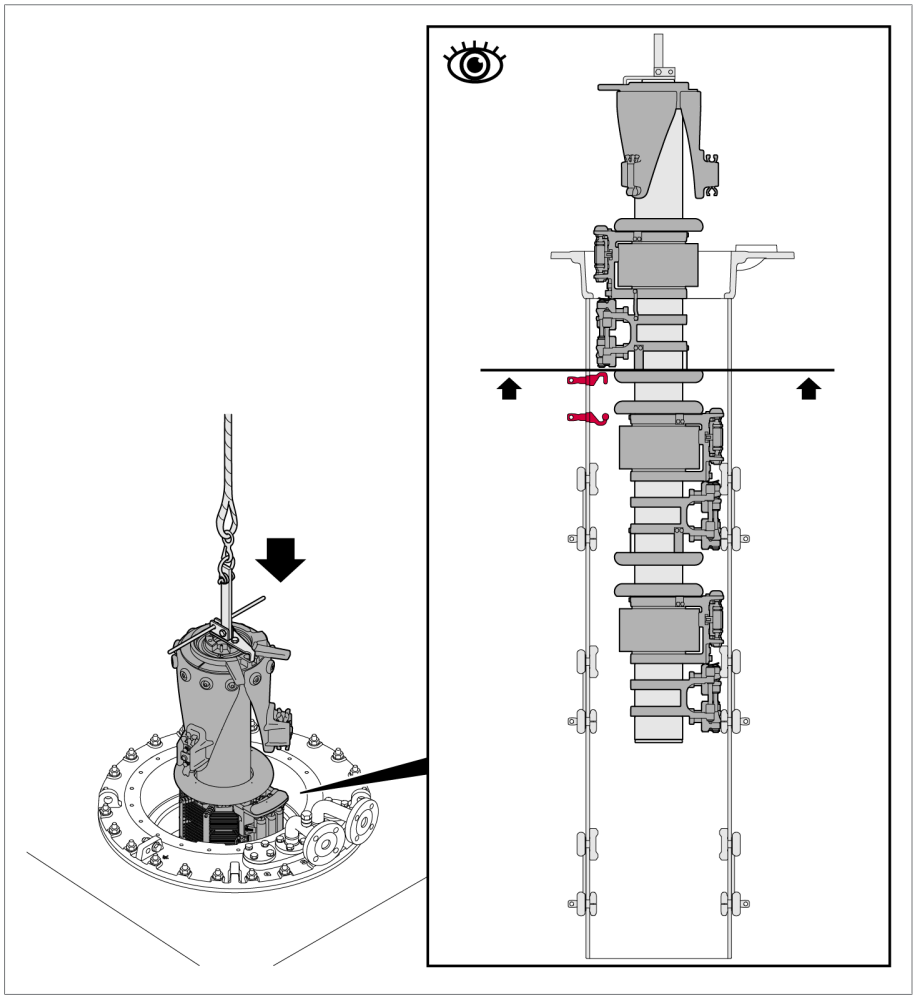

Figure 150: On-load tap-changer insert

5. Turn the operating wrench counterclockwise until the phase U switching element is between the fixed contacts of the change-over selector.

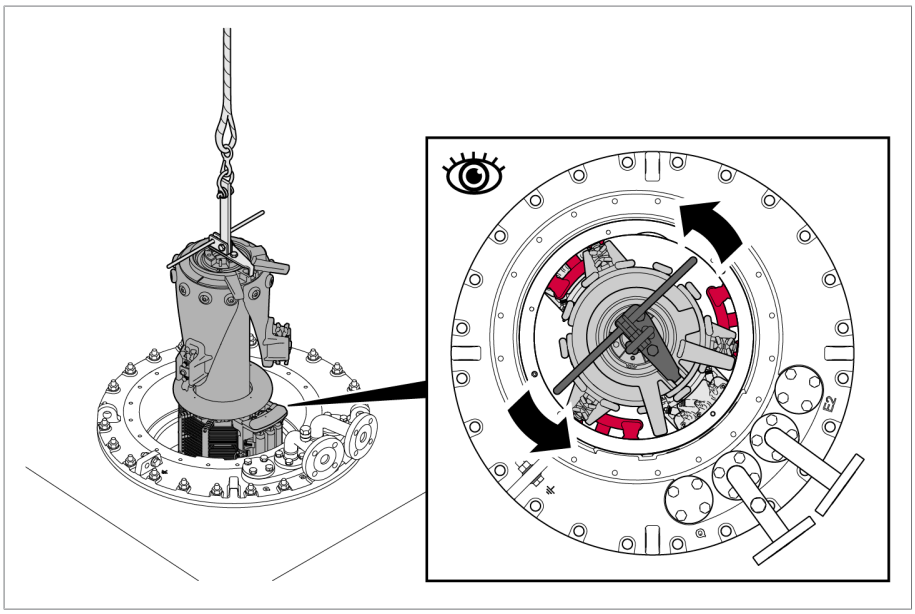

Figure 151: On-load tap-changer insert

6. Carefully lower the on-load tap-changer insert until the moving contacts of the change-over selector are directly over the fixed contacts of the change-over selector.

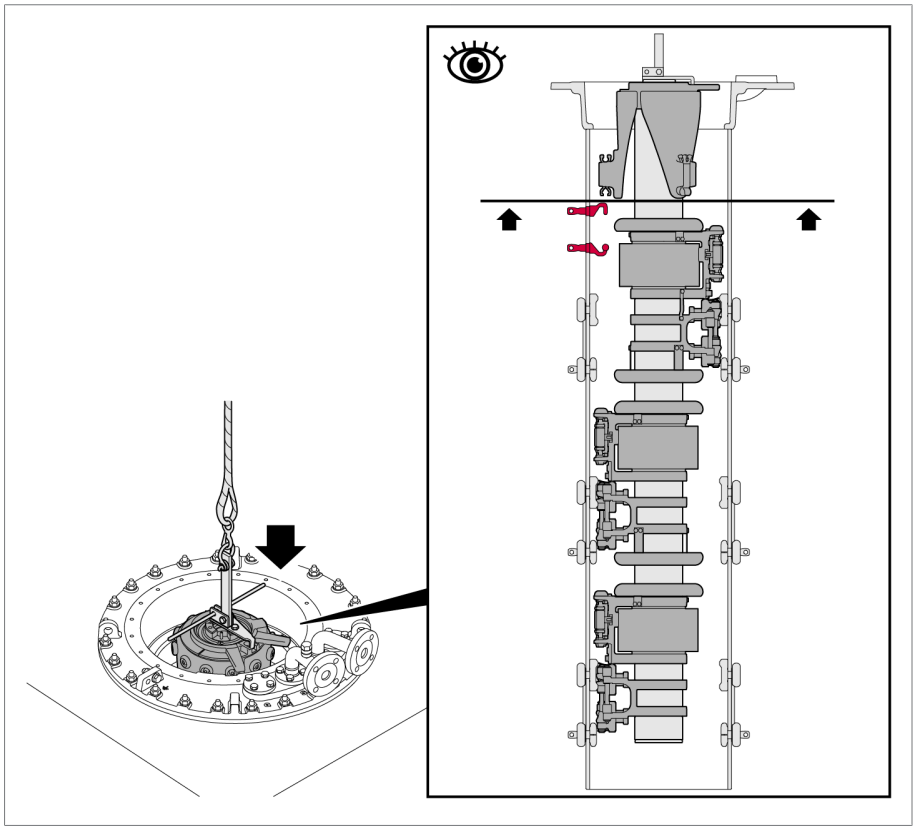

Figure 152: On-load tap-changer insert

7. Turn the operating wrench clockwise until the moving contacts of the change-over selector are between the fixed contacts of the change-over selector.

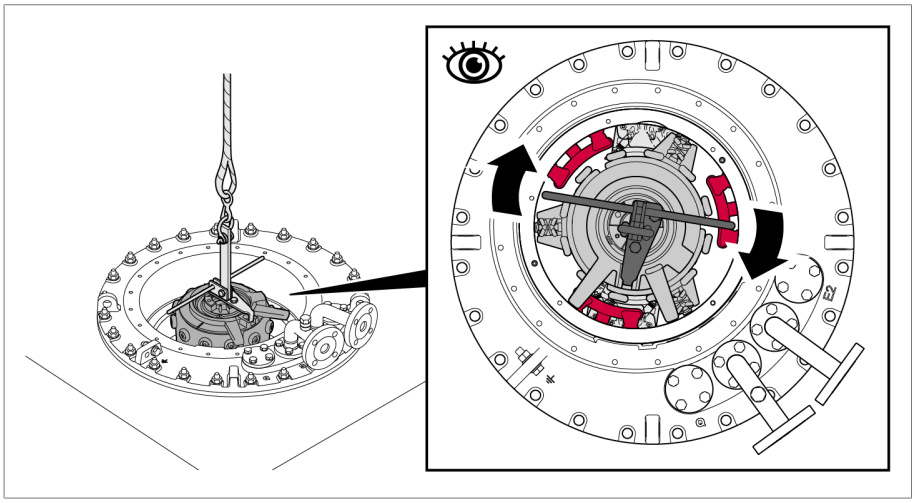

Figure 153: On-load tap-changer insert

8. Lower the on-load tap-changer. Remove the lifting gear.

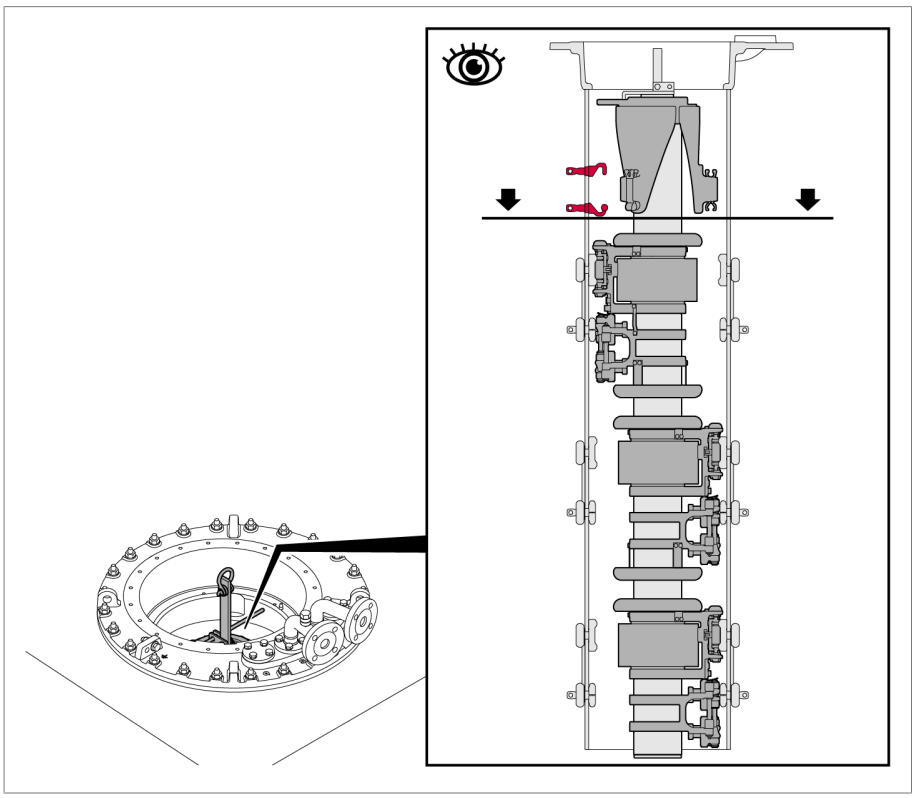

Figure 154: On-load tap-changer insert

9. Turn the operating wrench counterclockwise to put the change-over selector in the closed position. The change-over selector connects 0 and (-); the switching elements are at selector switch contact K.

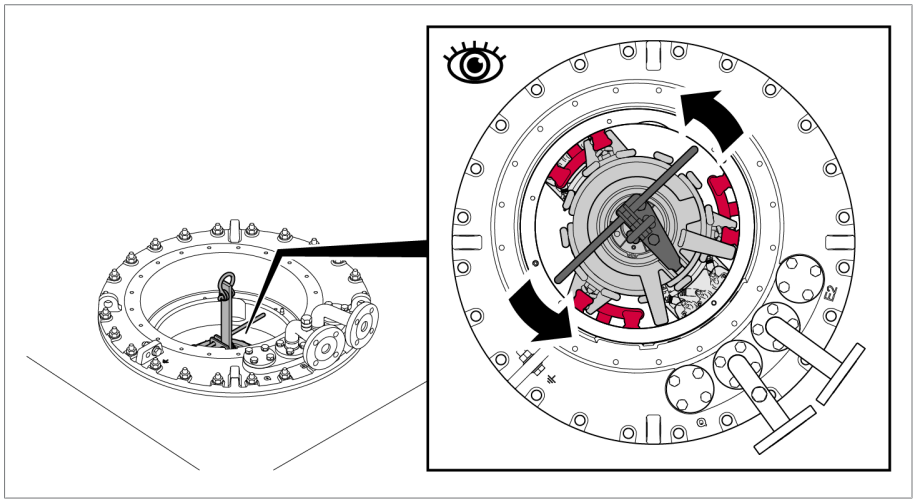

Figure 155: On-load tap-changer insert

10. Check the position of the support rail. The two triangles on the on-load tap-changer head and on the support rail must be aligned (also see the adjustment plan). The change-over selector contacts are then correctly in the closed position.

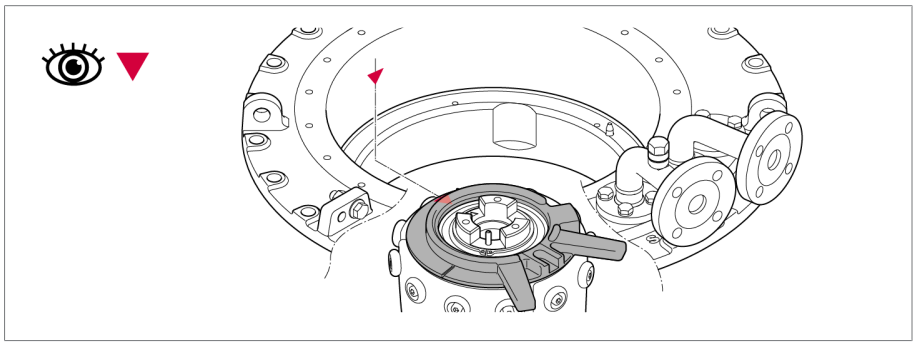

Figure 156: Check support rail

5.3.8.2.3.4 Inserting oil suction pipe

NOTICE

Damage to the on-load tap-changer!

Damage to the on-load tap-changer and oil suction pipe due to incorrect order of installation.

► Strictly adhere to the order of installation. Make sure to always install the diverter switch insert before inserting the oil suction pipe into the oil compartment.

1. Carefully insert the suction pipe by hand.

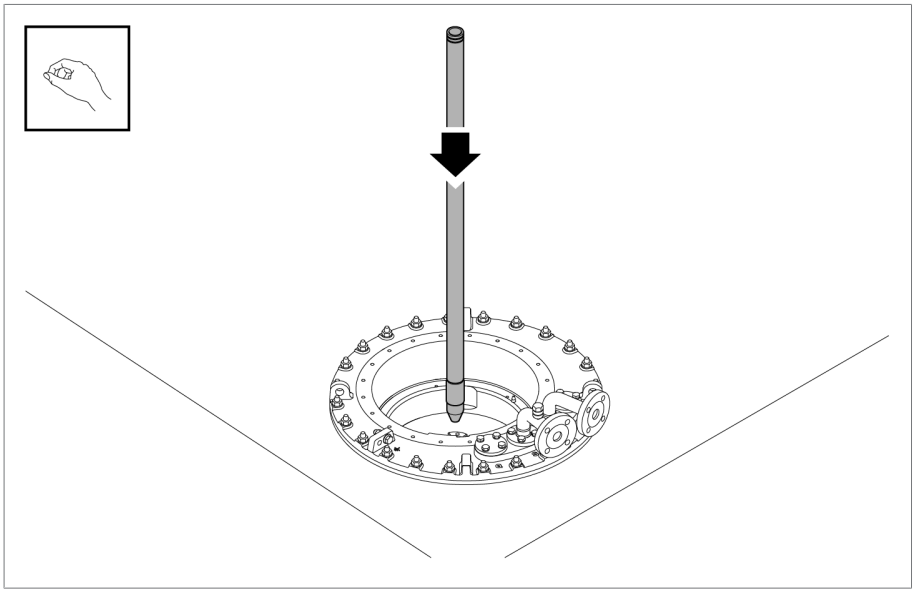

Figure 157: Oil suction pipe

2. Press on the upper end of the suction pipe. The suction pipe snaps into the oil compartment base.

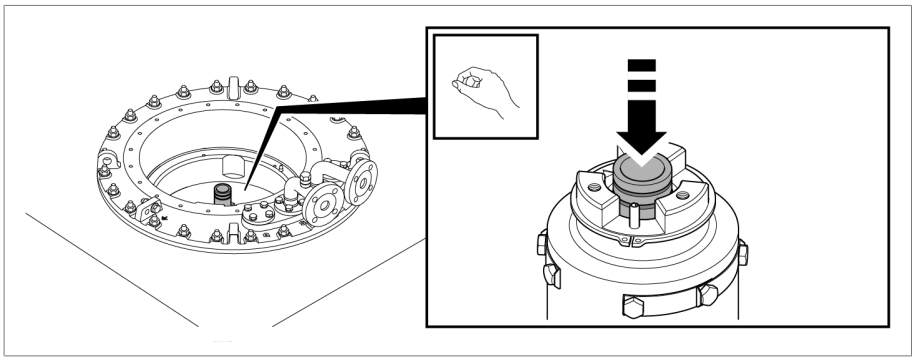

Figure 158: Oil suction pipe

5.3.8.2.3.5 Installing the gear unit

1. Check that the support rail is in the correct position. Both triangular markings in the on-load tap-changer head and on the support rail must be aligned (also see the adjustment plan).

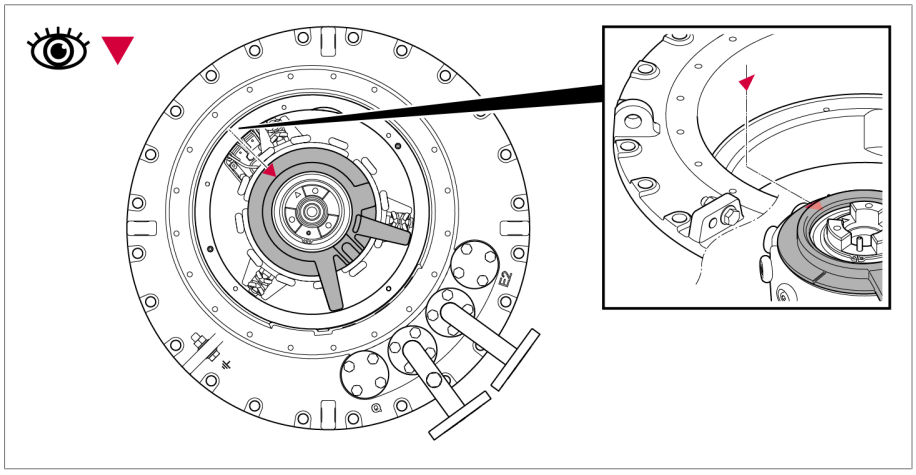

Figure 159: Support rail

2. Ensure that the gear unit is in the adjustment position (see supplied connection diagram of the on-load tap-changer). Install the gear unit. Installation and coupling can be done only in this position. Pay attention to the spring washers.

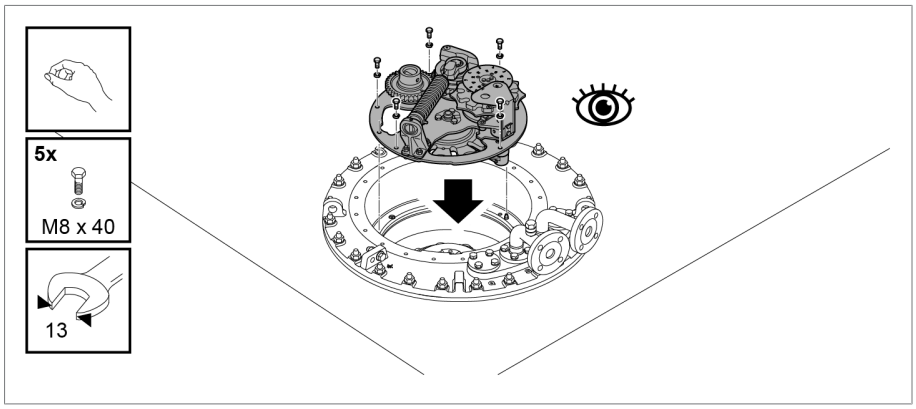

Figure 160: Gear unit supporting plate

5.3.8.2.3.6 Securing on-load tap-changer head cover

NOTICE

Damage to the on-load tap-changer!

A missing or damaged o-ring as well as unclean sealing surfaces lead to insulating fluid escaping and therefore to damage to the on-load tap-changer.

- ► Ensure that the o-ring is positioned untwisted in the on-load tap-changer head cover.
- ► Ensure that the o-ring does not become damaged when mounting the cover.
- ► Ensure that the sealing surfaces on the on-load tap-changer head cover and on-load tap-changer head are clean.

1. Align the on-load tap-changer head cover in such a way that the red triangular markings on the on-load tap-changer head and the on-load tap-changer head cover are aligned.

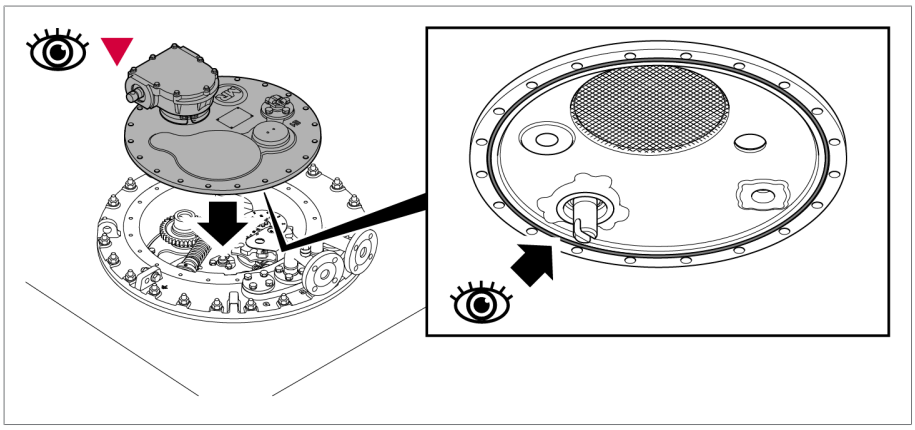

Figure 161: On-load tap-changer head cover

2. Screw the on-load tap-changer head cover onto the on-load tap-changer head.

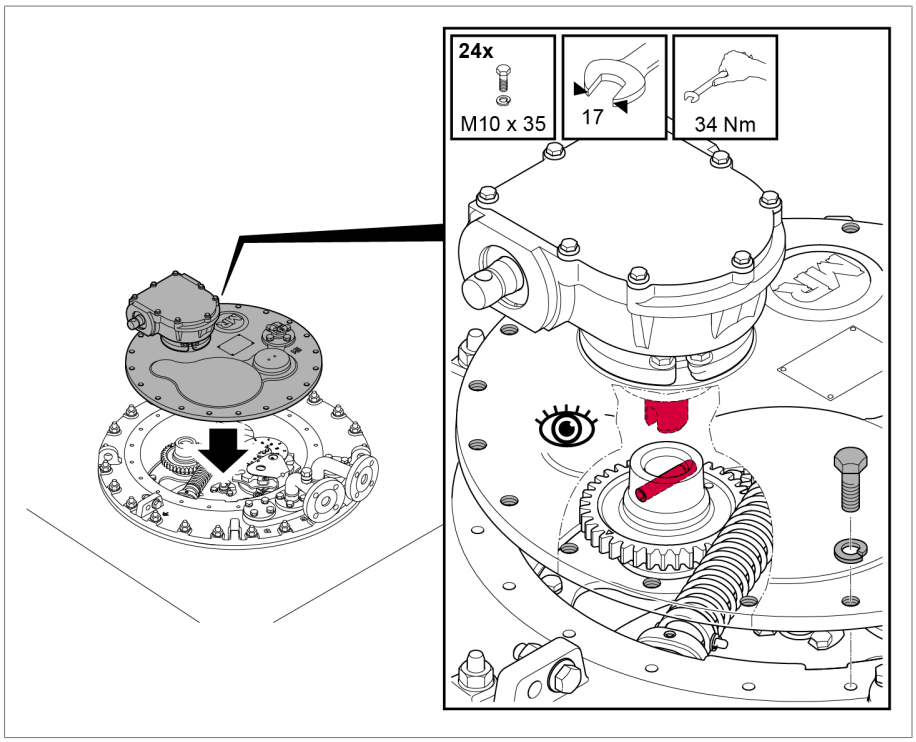

Figure 162: On-load tap-changer head cover

5.3.8.2.4 Drying the on-load tap-changer

1. Connect pipe connections R and Q of on-load tap-changer head to the kerosene vapor lead using one shared lead.
2. Seal off unused pipe connections with a suitable blank cover.

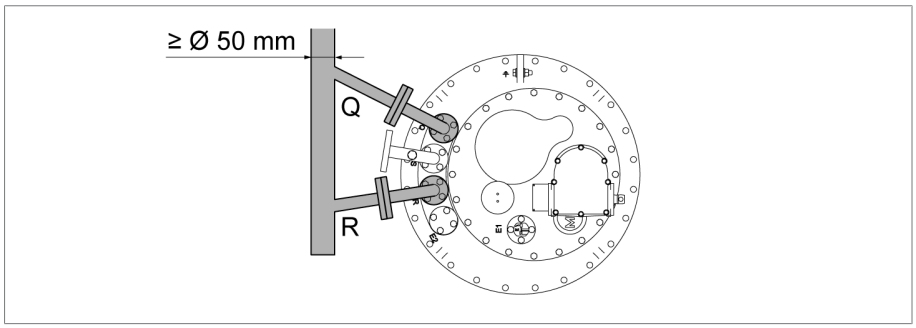

Figure 163: Shared lead

Vapor-phase drying in the transformer tank

1. Supply kerosene vapor at a temperature of around 90°C. Keep this temperature constant for 3 to 4 hours.
2. Increase the kerosene vapor temperature by approx. 10°C/hour to the desired final temperature of max. 125°C at the on-load tap-changer.
3. Vacuum-dry on-load tap-changer at between 105°C and maximum 125°C for at least 50 hours.
4. Residual pressure of no more than 10^{-3} bar.

5.3.8.2.5 Closing kerosene drain plug

NOTICE

Damage to the on-load tap-changer!

Moisture in the oil compartment reduces the dielectric strength of the insulating fluid and thus leads to damage to the on-load tap-changer.

► Within 10 hours of drying, seal off oil compartment with on-load tap-changer head cover.

1. Remove [►Section 5.3.8.2.1, Page 113] the diverter switch insert.
2. Close kerosene drain plug by turning clockwise with extended socket wrench (tightening torque 39 Nm).
3. Insert [►Section 5.3.8.2.3, Page 126] the diverter switch insert.

If you wish to perform another transformer ratio test after drying, proceed as described in the section "Performing transformer ratio test following drying" [►Section 5.3.10, Page 146].

5.3.9 Filling the oil compartment of the on-load tap-changer with insulating fluid

NOTICE

Damage to the on-load tap-changer!

Unsuitable insulating fluids cause damage to the on-load tap-changer.

► Only use insulating fluids that meet the requirements in accordance with IEC 60296.

After drying, completely fill the oil compartment (on-load tap-changer insert fitted) with insulating fluid again as soon as possible so that an impermissible amount of humidity is not absorbed from the surroundings.

1. Establish a connecting lead between pipe connection E2 and one of the pipe connections R, S or Q to ensure equal pressure in the oil compartment and transformer during evacuation.

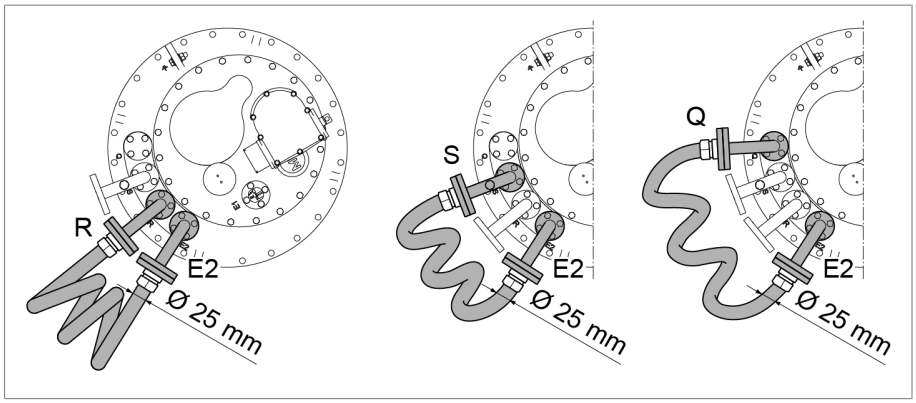

Figure 164: Connecting lead

2. Fill on-load tap-changer with new insulating fluid using one of the two free pipe connections of the on-load tap-changer head.

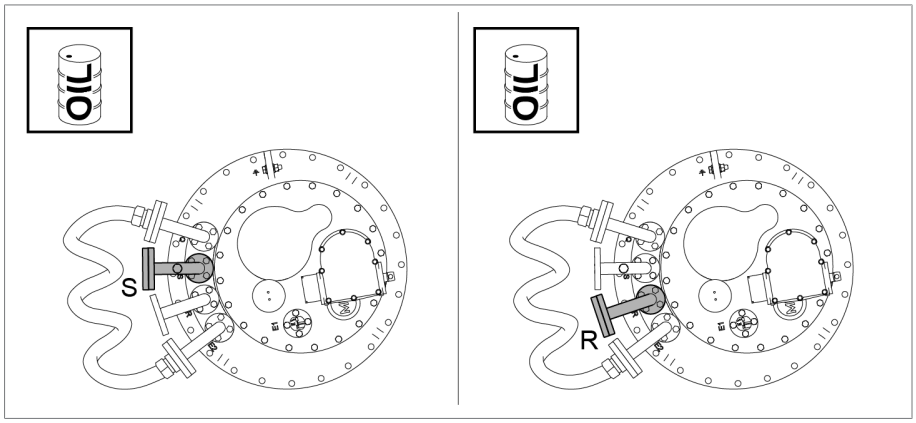

Figure 165: Pipe connections S and R

5.3.10 Performing transformer ratio test after drying

NOTICE

Damage to the on-load tap-changer!

Damage to the on-load tap-changer due to transformer ratio test being incorrectly performed.

- ► Ensure that the selector / de-energized tap changer is fully immersed in the insulating fluid and that the oil compartment of the on-load tap-changer is completely filled with insulating fluid.
- ► Only switch the on-load tap-changer from one operating position to the next via the upper gear unit. You can use a short tube (diameter 25 mm) with screwed-in coupling bolt (diameter 12 mm) with a hand wheel or crank for this, for example. When using a drill, do not exceed a maximum speed of 250 rpm.
- ► Always check the operating position reached through the inspection window in the on-load tap-changer head cover. Never overshoot the end positions, which are indicated in the connection diagram supplied with the delivery.
- ► For multiple-column applications with a shared drive, link all on-load tap-changer heads to one another using the horizontal drive shaft part.

When actuating the change-over selector, a higher torque is required.

To perform the transformer ratio test, proceed as follows:

1. Switch the on-load tap-changer into the desired operating position. The diverter switch operation can be heard distinctly.
2. **NOTICE!** An incomplete tap-change operation may damage the on-load tap-changer. After operating the diverter switch, continue to crank the drive shaft of the upper gear unit for 2.5 revolutions in the same direction in order to correctly complete the tap-change operation.
3. Perform the transformer ratio test.
4. Repeat the transformer ratio test in all operating positions.
5. Once the transformer ratio test is complete, return on-load tap-changer to its adjustment position (see supplied connection diagram of the on-load tap-changer).

5.4 Fitting protective devices and drive components

5.4.1 Installing protective relay in piping and connecting

⚠ WARNING

Danger of explosion!

Explosive gases in the protective relay can deflagrate or explode and result in severe injury or death.

- ▶ Wait 15 minutes after switching off the transformer before beginning further work on the protective relay so that the gases can dissipate.
- ▶ Ensure that there are no ignition sources such as naked flames, hot surfaces or sparks (e.g. caused by the build-up of static charge) in the immediate surroundings and that none occur.
- ▶ De-energize all auxiliary circuits before beginning work.
- ▶ Do not operate any electrical devices during the work (e.g. risk of sparks from impact wrench).

Always perform all transformer tests with the protective relay attached and connected.

5.4.1.1 Checking function of protective relay

Check the function of the protective relay before installing it in piping between on-load tap-changer head and oil conservator. The associated contact positions for checking electrical continuity are shown in the dimensional drawing provided.

1. Loosen the three screws on the terminal box cover and lift off the terminal box cover.

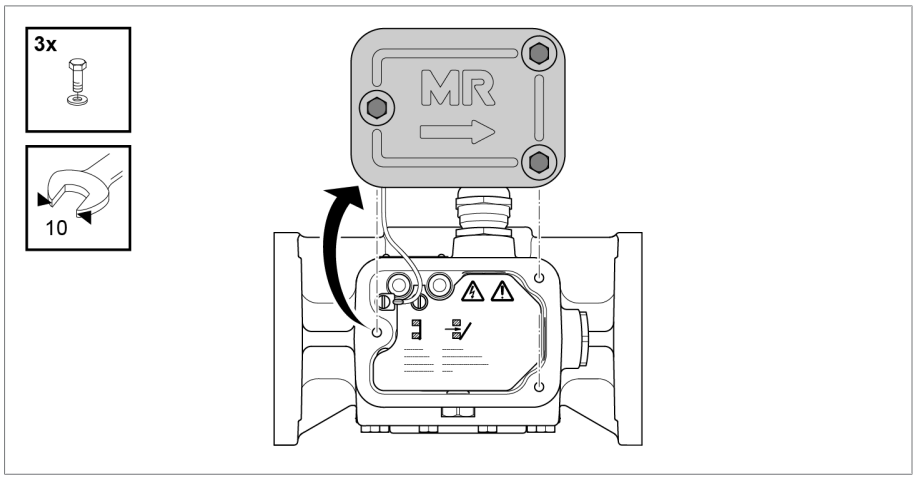

Figure 166: Terminal box cover

2. Remove the slotted head screw for potential tie-in and remove the terminal box cover with wire.

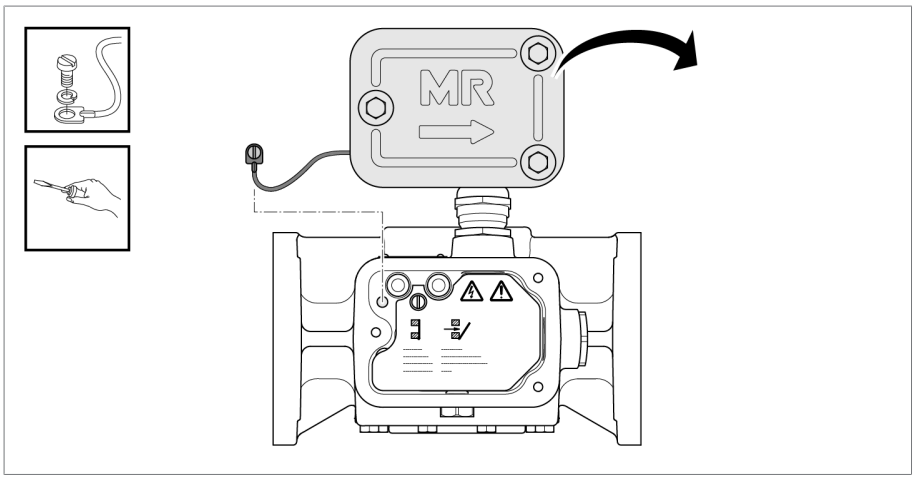

Figure 167: Terminal box cover

NOTICE

Damage to protective relay!

Damage to protective relay resulting from improper operation.

► Never press both test buttons at the same time.

3. Press OFF test button.

   ⇨ Flap valve is inclined. Line marker appears in the middle of the inspection window.

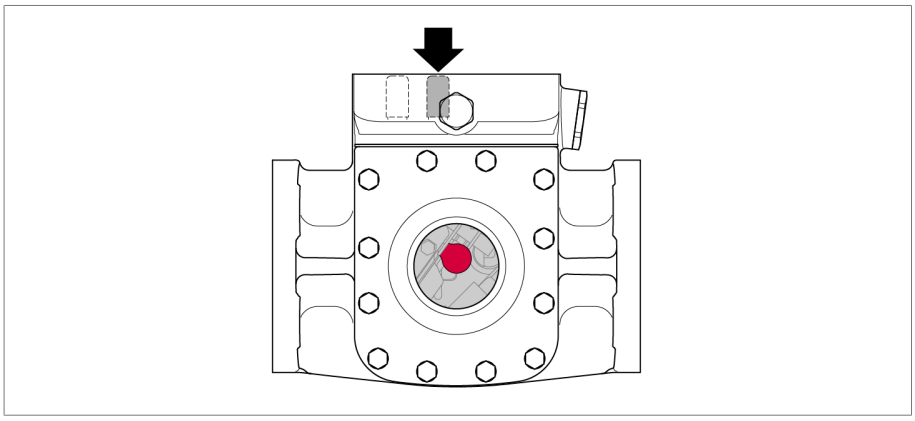

Figure 168: OFF position

4. Press OPERATION test button.
   ⇨ Flap valve is vertical.

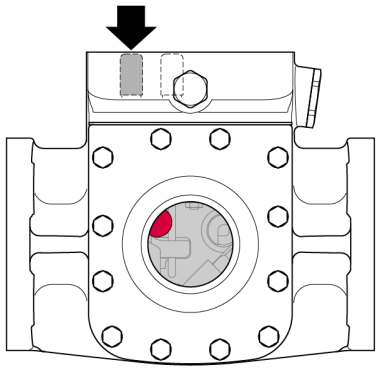

Figure 169: OPERATION position

5. Position the wire for the terminal box cover and affix using the slotted head screw.

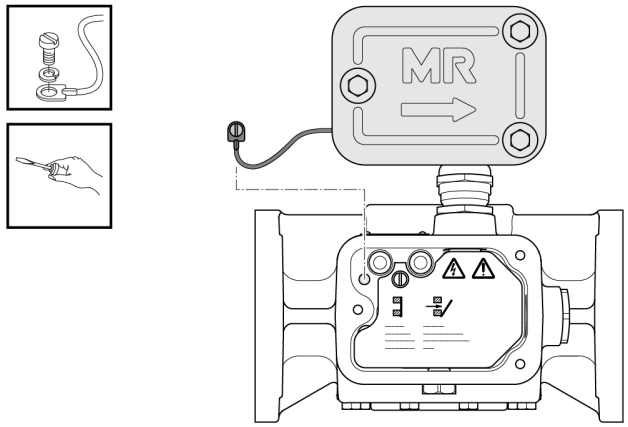

Figure 170: Terminal box cover

6. Attach the terminal box cover and secure with screws.

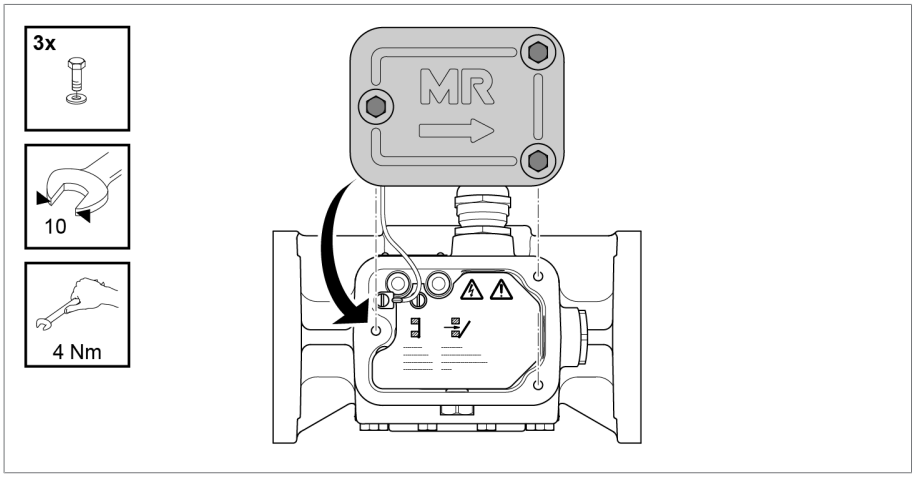

Figure 171: Terminal box cover

5.4.1.2 Installing protective relay in piping

Ensure the following for installation and proper function of the protective relay:

1. Prior to installing the protective relay, ensure that there are no foreign bodies in the piping or in the oil conservator.
2. Install protective relay such that it can be easily accessed for subsequent maintenance work.
3. Install protective relay with good support and free from vibrations.
4. The test buttons must be at the top.
5. The pipes from the protective relay to the oil conservator must be routed with an inclination of at least 2% to ensure the switching gases can escape freely.
6. The inner piping diameter must be at least 25 mm.

7. The magnetic field strength (bushings, busbars etc.) must be < 20 kA/m. Higher field strengths have a negative effect on the function of the protective relay.

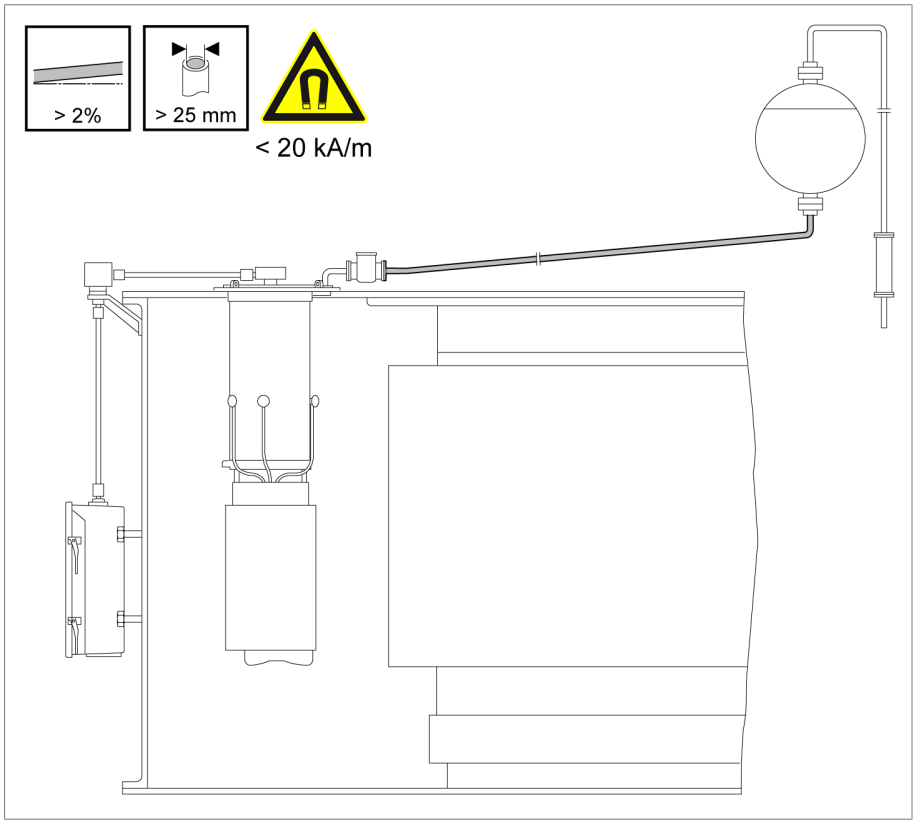

Figure 172: Pipe

8. The reference arrow on the terminal box cover must point toward the on-load tap-changer's oil conservator.

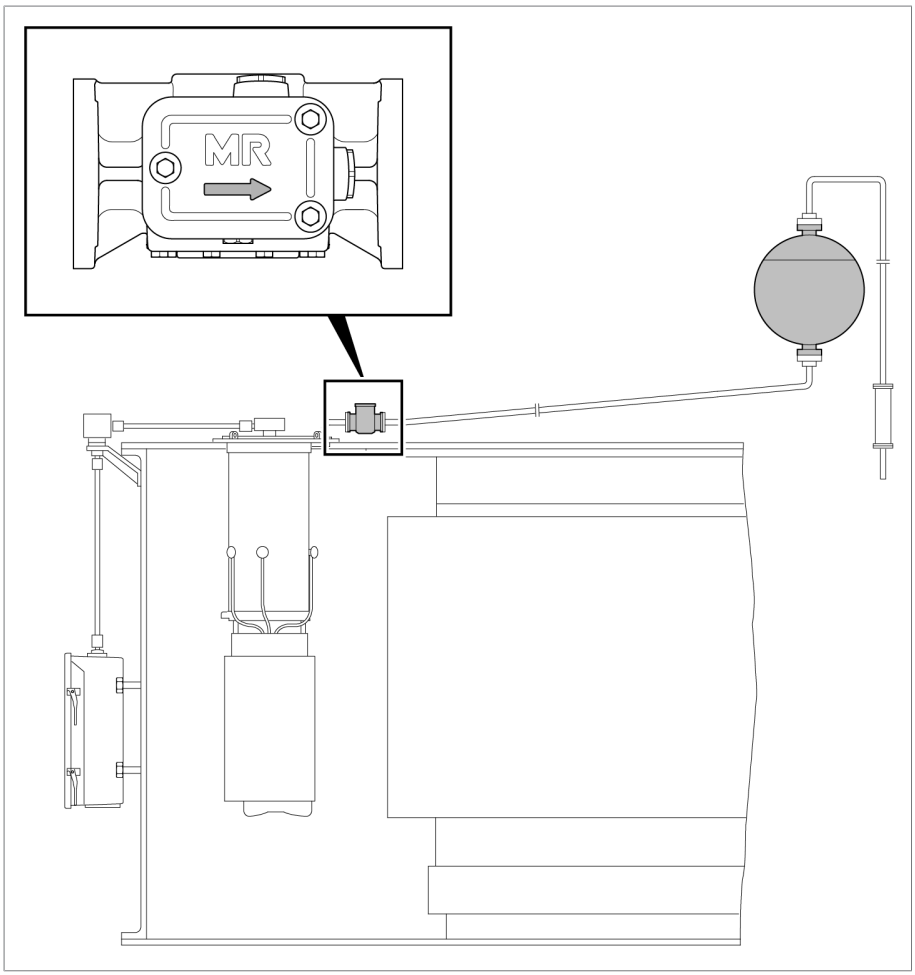

Figure 173: Reference arrow pointing towards the on-load tap-changer's oil conservator

9. Install the protective relay horizontally in the pipe between on-load tap-changer head and oil conservator as near as possible to the on-load tap-changer head.

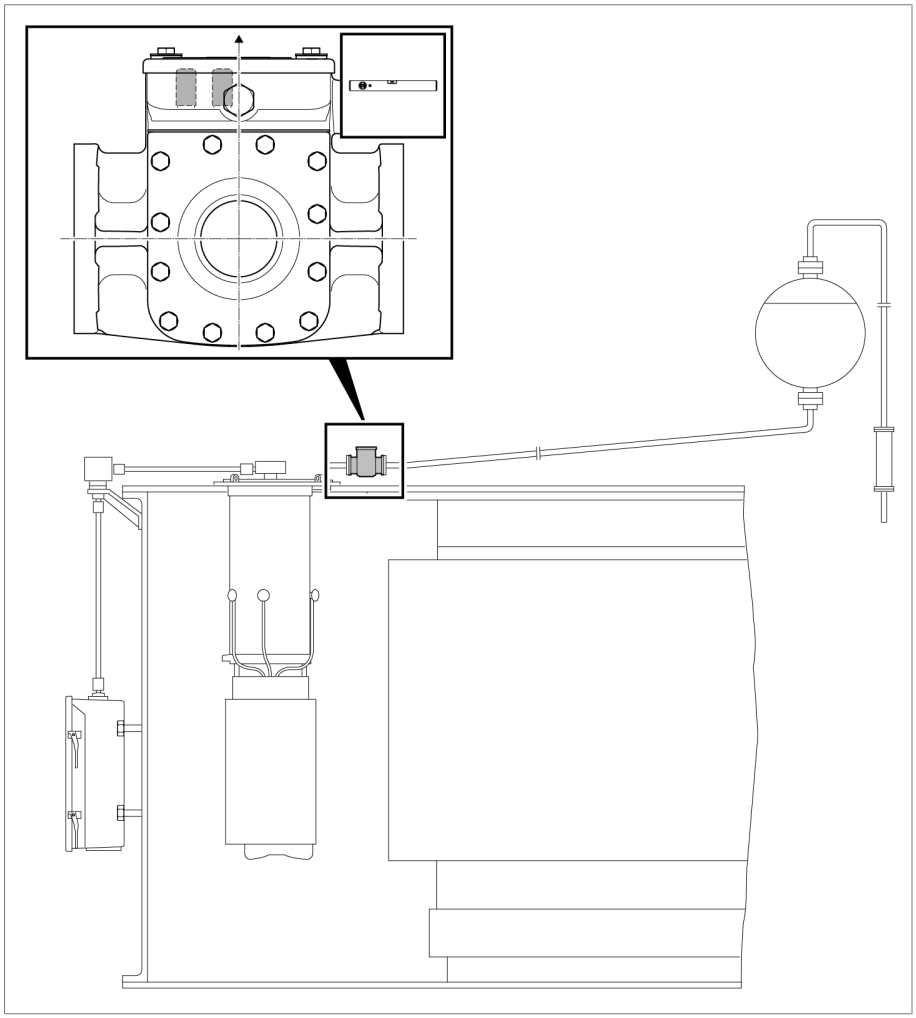

Figure 174: Protective relay horizontal and with test button at the top

10. Install a stop-cock (nominal width of at least 25 mm) between protective relay and oil conservator.

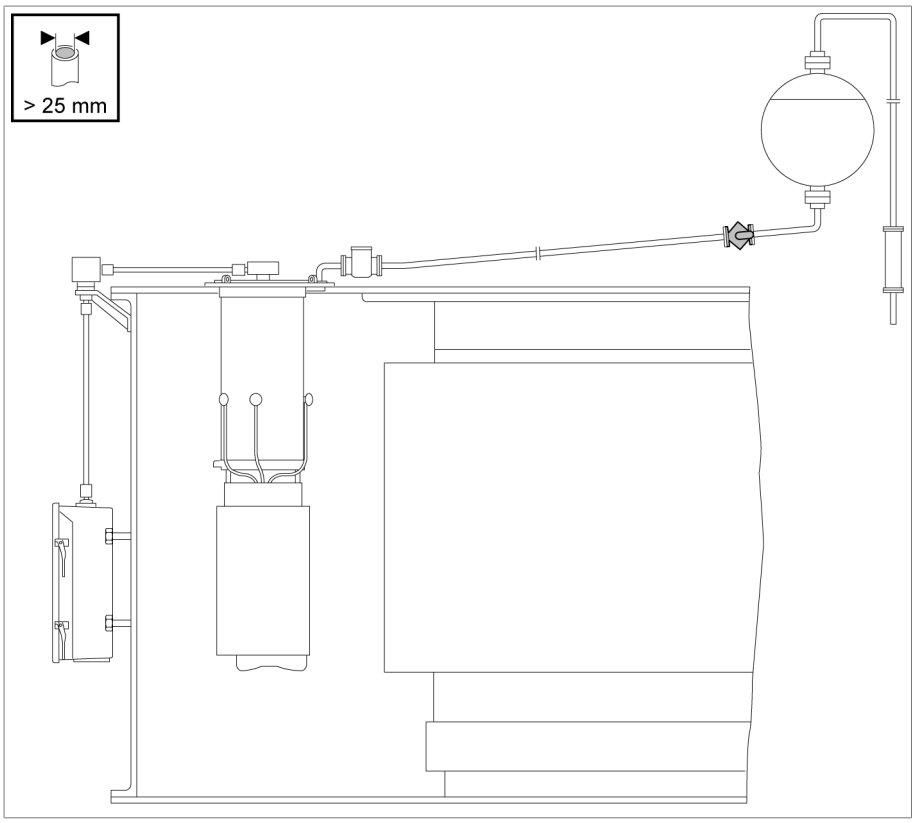

Figure 175: Stop-cock

5.4.1.3 Making the electrical connections for the protective relay

The protective relay's dry-reed magnetic switching tubes are supplied in the standard version as either NC or NO contacts. Other contact combinations can be supplied as special versions and are shown in the dimensional drawing provided.

⚠ WARNING

Risk of death or severe injury!

Risk of death or severe injury due to improper electrical connection of the protective relay.

- ► Loop the protective relay into the tripping circuit of the circuit breakers of the transformer to be protected so that the transformer is immediately de-energized by the circuit breakers when the protective relay is tripped.
- ► Systems which only generate an alarm message are not permitted.

1. Insert cable gland (RS 2001, 2001/V, 2001/H, 2001/E, 2001/5, 2001/R) or adapter (RS 2003 and RS 2004) in the tapped hole with the most favorable position.

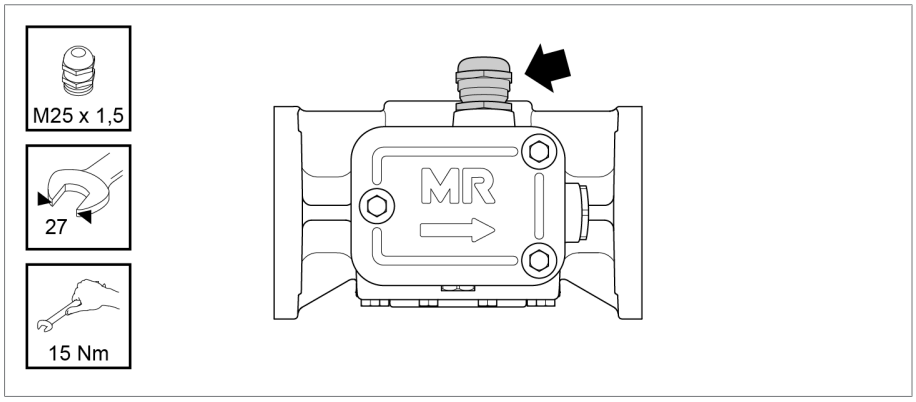

Figure 176: Tapped hole

2. Seal open tapped hole with dummy plug.

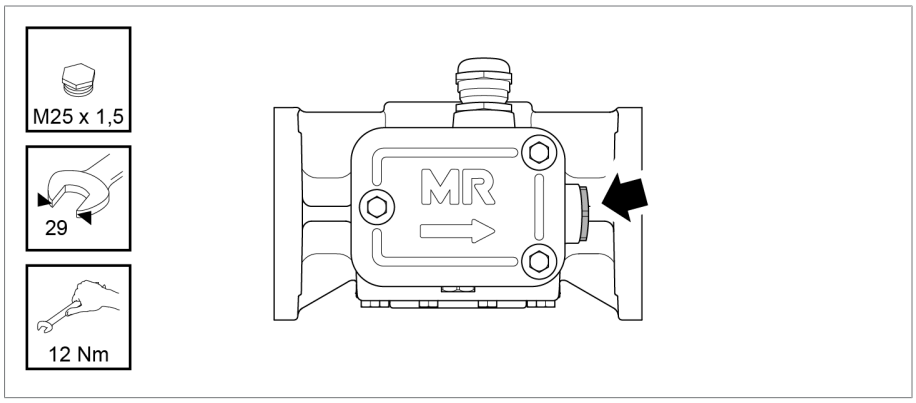

Figure 177: Sealed with dummy plug

3. Loosen the three screws on the terminal box cover and lift off the terminal box cover.

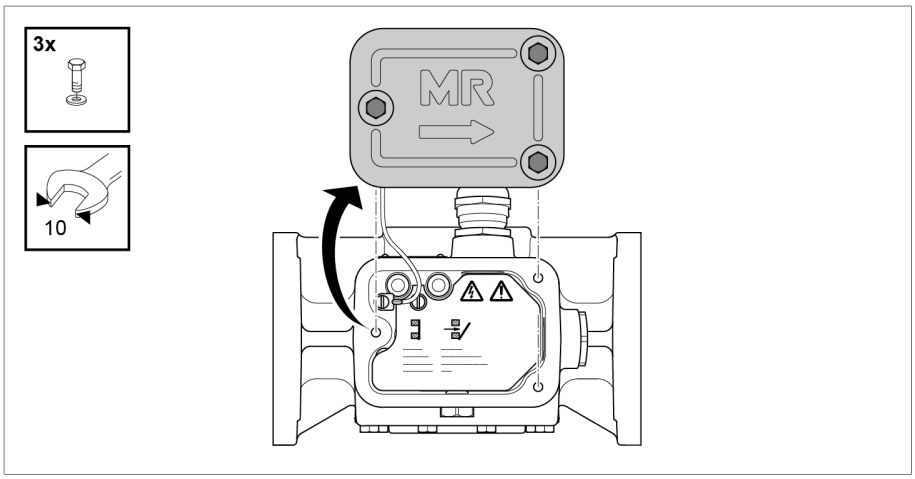

Figure 178: Terminal box cover

4. Take off the slotted head screw for potential tie-in and remove the terminal box cover with wire.

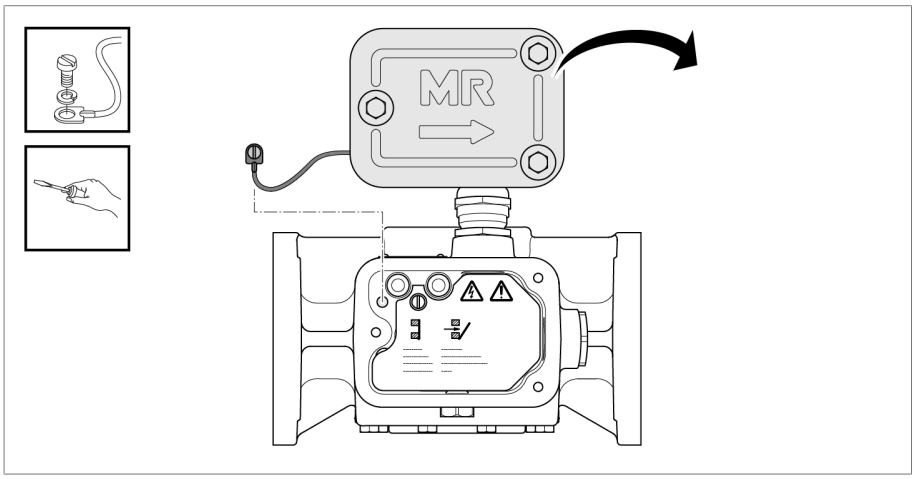

Figure 179: Terminal box cover

5. Remove screw for the protective cover and take off the protective cover.

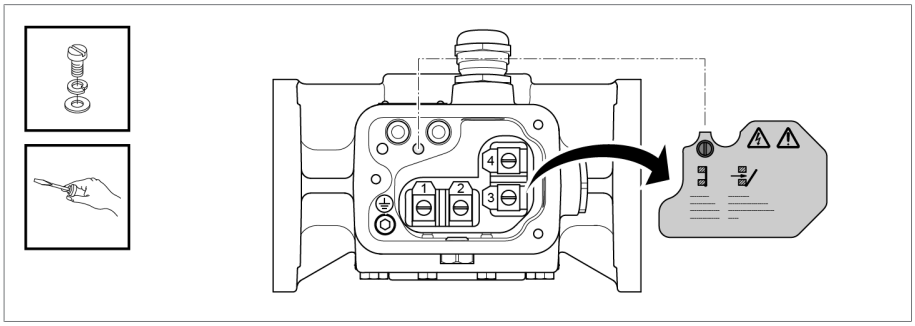

Figure 180: Protective cover

6. Guide cable through cable gland and into protective relay. Ensure that the cable gland is well connected and sealed.

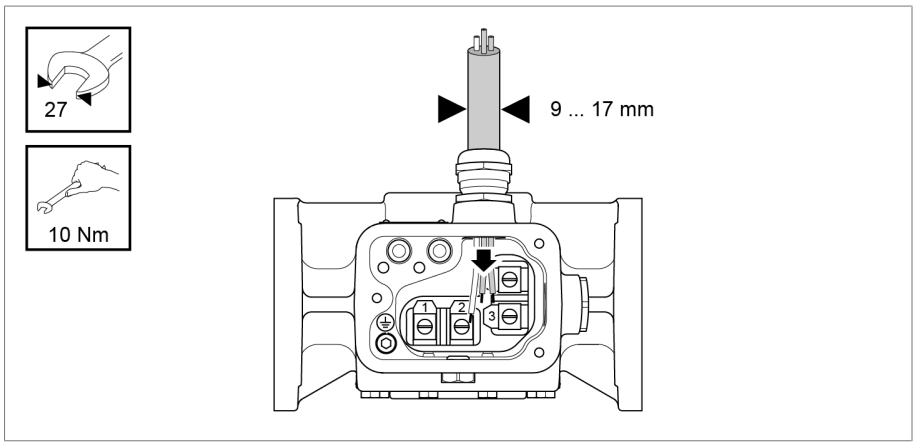

Figure 181: Cable bushing

7. Connect the electric cables to the connection terminals in accordance with the connection diagram on the dimensional drawing.

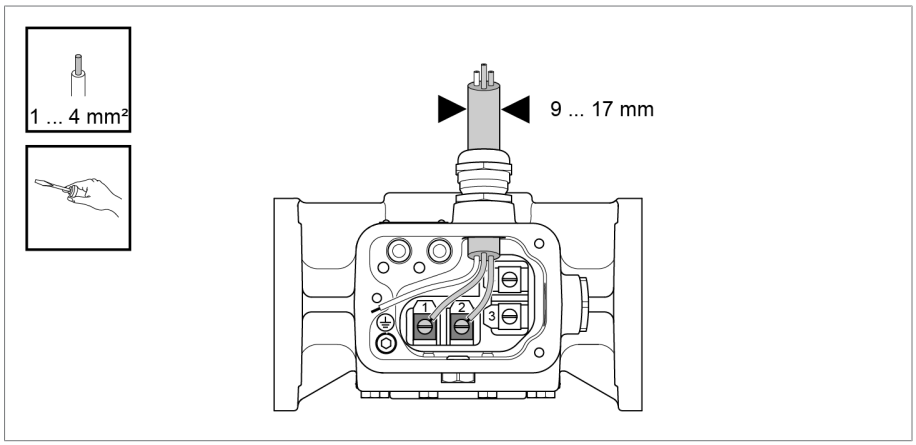

Figure 182: Electrical cables

8. Connect protective conductor to cylinder head screw.

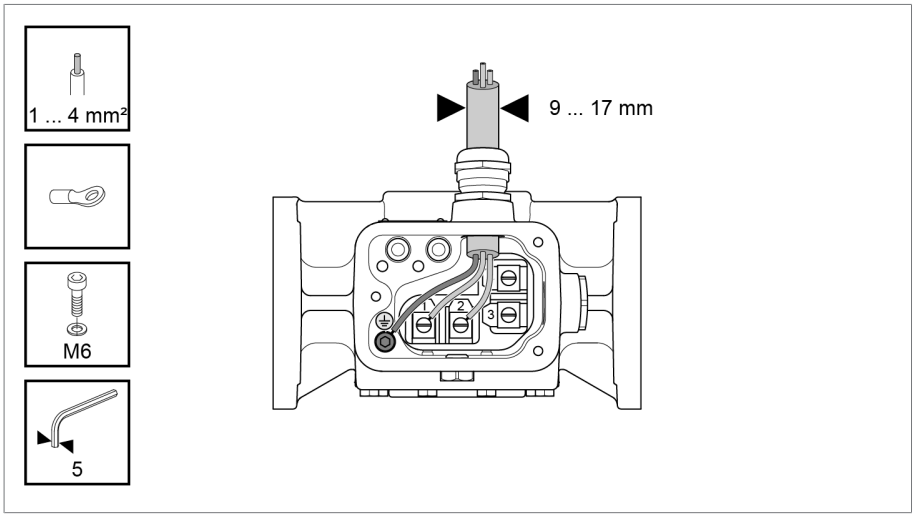

Figure 183: Protective conductor

9. Insert the protective cover and secure using the screw.

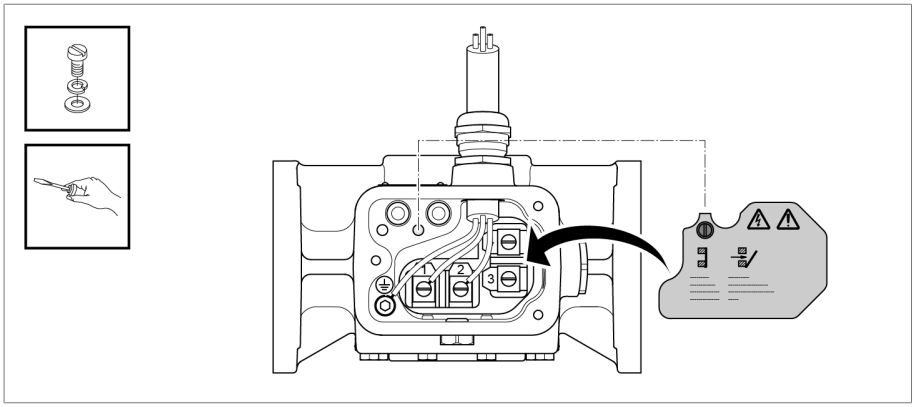

Figure 184: Protective cover

10. Position the wire for the terminal box cover and affix using the slotted head screw.

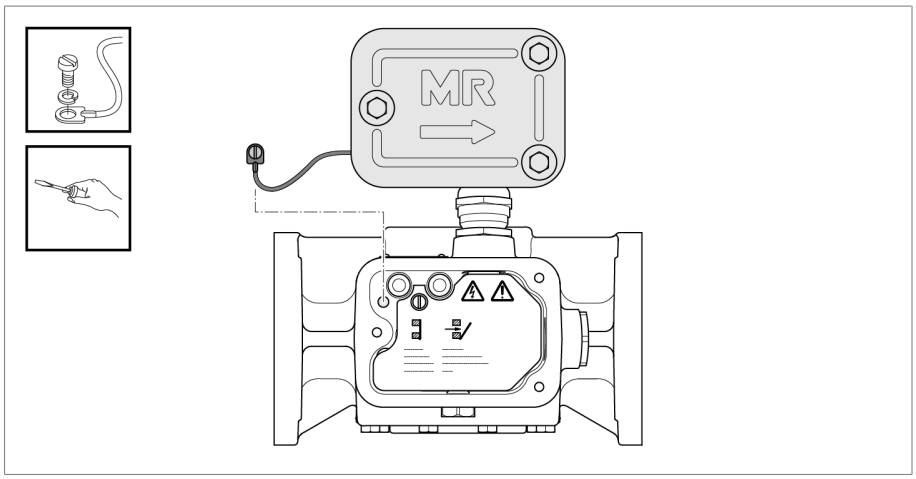

Figure 185: Terminal box cover

11. Attach the terminal box cover and secure with screws.

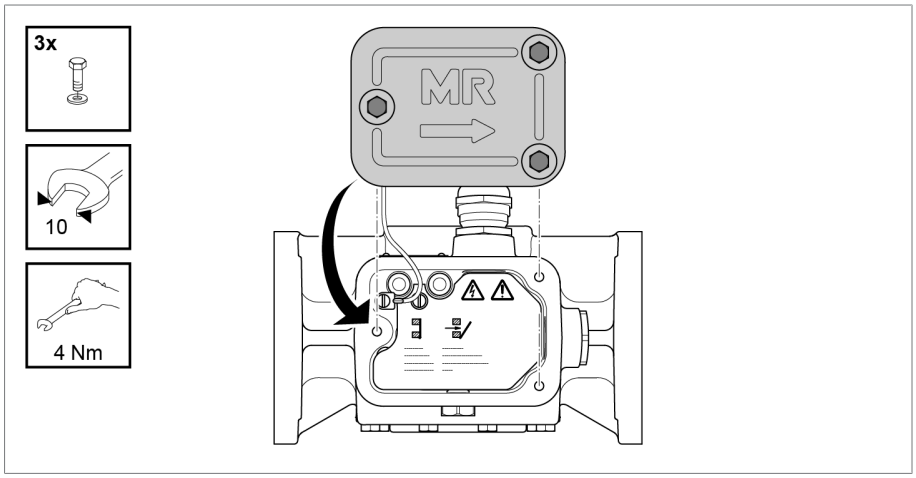

Figure 186: Terminal box cover

5.4.2 Installing and connecting the pressure monitoring device

5.4.2.1 Checking the function of the pressure monitoring device

Check the function of the pressure monitoring device before you install it on the pipe bend or the on-load tap-changer head.

1. Remove the cover cap.

2. Activate the snap-action switch.
   ⇨ Sensor is in the OFF position above the snap-action switch.

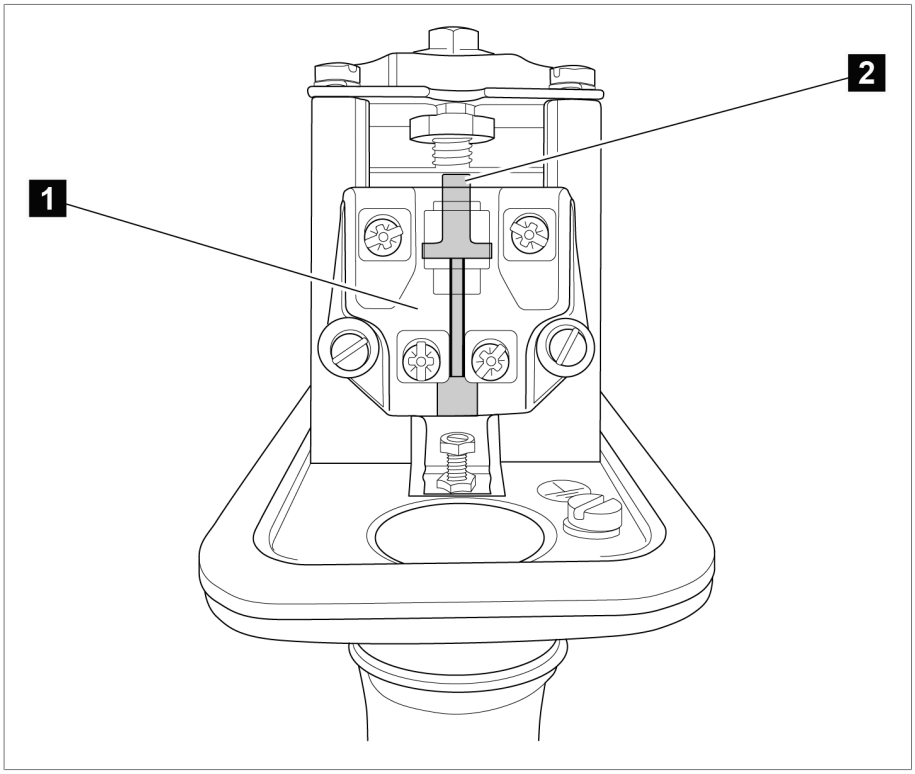

Figure 187: OFF position

1	Snap-action switch
2	Sensor in the OFF position

3. Activate the snap-action switch again.
   ⇨ Sensor is in the OPERATION position below the snap-action switch.

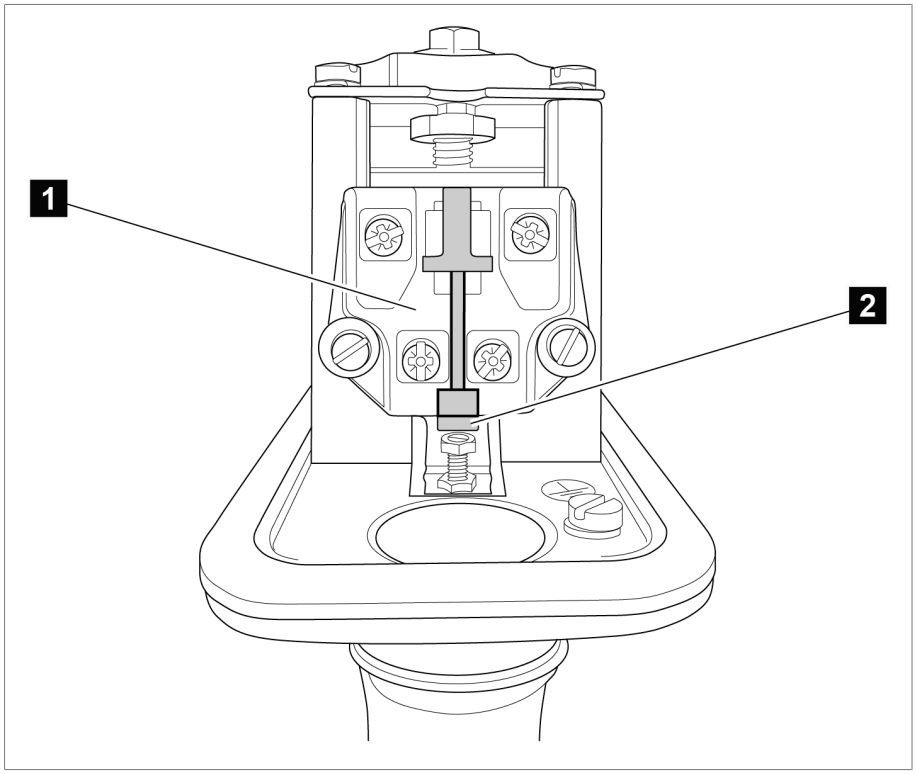

Figure 188: OPERATION position

1	Snap-action switch
2	Sensor in the OPERATION position

4. Secure the cover cap.

Always check the position of the sensor!

5.4.2.2 Installing the pressure monitoring device

The pressure monitoring device can be installed in 2 variants.

- Fastening on the on-load tap-changer head (vertical installation)
- Fastening onto the pipe bend (horizontal installation)

It is installed via the holes on the mounting ring. A mounting seal has to be installed under the pressure monitoring device during installation.

During fastening, ensure that the ventilation is on top.

Ensure that there is sufficient space above the pressure monitoring device to remove the cover cap.

5.4.2.3 Making the electrical connections for the pressure monitoring device

⚠ DANGER

Risk of fatal injury due to electrical voltage!

Danger of death due to electrical voltage when assembling and connecting the device.

► De-energize the device and system peripherals and lock them to prevent them from being switched back on.

⚠ WARNING

Risk of death or severe injury!

Risk of severe injury or death due to improper electrical connection of the pressure monitoring device.

► Loop the pressure monitoring device into the tripping circuit of the circuit breakers of the transformer to be protected so that the transformer is immediately de-energized by the circuit breakers when the pressure monitoring device is tripped.

► Circuits which only generate an alarm message are not permitted.

1. Remove the cover cap.
2. Insert M25x1.5 cable gland.
   Use the tapped hole for routing leads for this.
3. Connect the leads to the terminals of the snap-action switch.
   The snap-action switch is designed as a normally open and normally closed switch; it flips after being triggered and can be reset.
4. Connect all of the electrical leads and the protective conductor.
   Either 1 or 2 leads can be connected per terminal for the lead connection (Ø 0.75…2.5 mm²).
5. Secure the cover cap.
6. Ensure the fixing screw is positioned correctly, see Appendix.

5.4.3 Fitting motor-drive unit

► Fit motor-drive unit to transformer as described in relevant MR operating instructions for motor-drive unit.

5.4.4 Fitting drive shaft

Observe the following during mounting:

Resistance to corrosion of components

The square tubes, coupling brackets, coupling bolts, screws, and locking washers are corrosion-resistant. We therefore recommend not applying the same external coating to these parts as to the transformer tank.

Cutting square tubes, telescopic protective tubes, and protective cover

The square tubes, the telescopic protective tube and the protective cover are supplied over-length (graded standard lengths). You must cut these parts to the required size before mounting on the transformer. In rare cases, you also have to cut the inner tube of the telescopic protective tube to the desired length. The maximum permitted total drive shaft length of the drive - last column = 15 m.

Standard lengths	Motor-drive unit	Manual drive
400	•	•
600	•	•
900	•	•
1300	•	•
1700	•	•
2000	•	•
2500	Not permitted	•[1)]

Table 6: Graded standard lengths of square tubes

[1)] l>2000 only possible for vertical installation without shaft protection! Telescopic protective tubes for manual drives with vertical dimensions V1> 2462 are to be supplied with vertical intermediate bearing, as with the motor-drive unit.

5.4.4.1 Fitting a vertical drive shaft without cardan joint

Permitted axial displacement

Minor axial displacement of the vertical drive shaft is permitted as long as it does not exceed 35 mm per 1000 mm of square tube length (this corresponds to 2°).

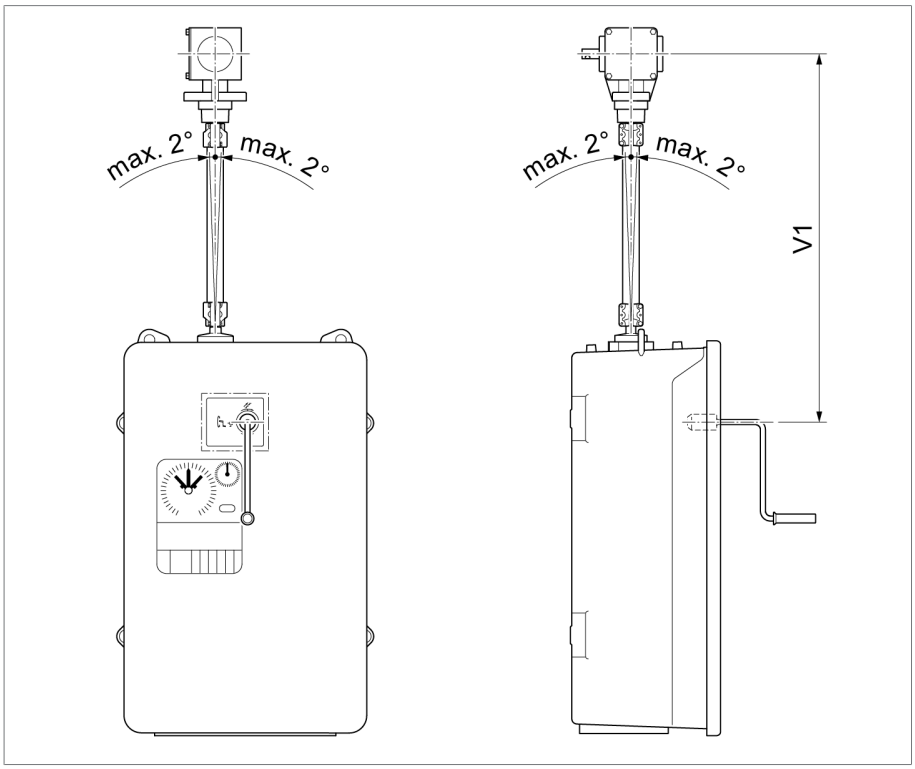

Figure 189: Permitted maximum axial displacement of vertical drive shaft without cardan joint

To fit the vertical drive shaft to the drive, proceed as follows:

1. ⚠ **CAUTION!** Switch off motor protective switch Q1 in the motor-drive unit (position O). If this is not done, the motor-drive unit may be started inadvertently and cause injuries.

2. Fasten the bevel gear to the transformer.

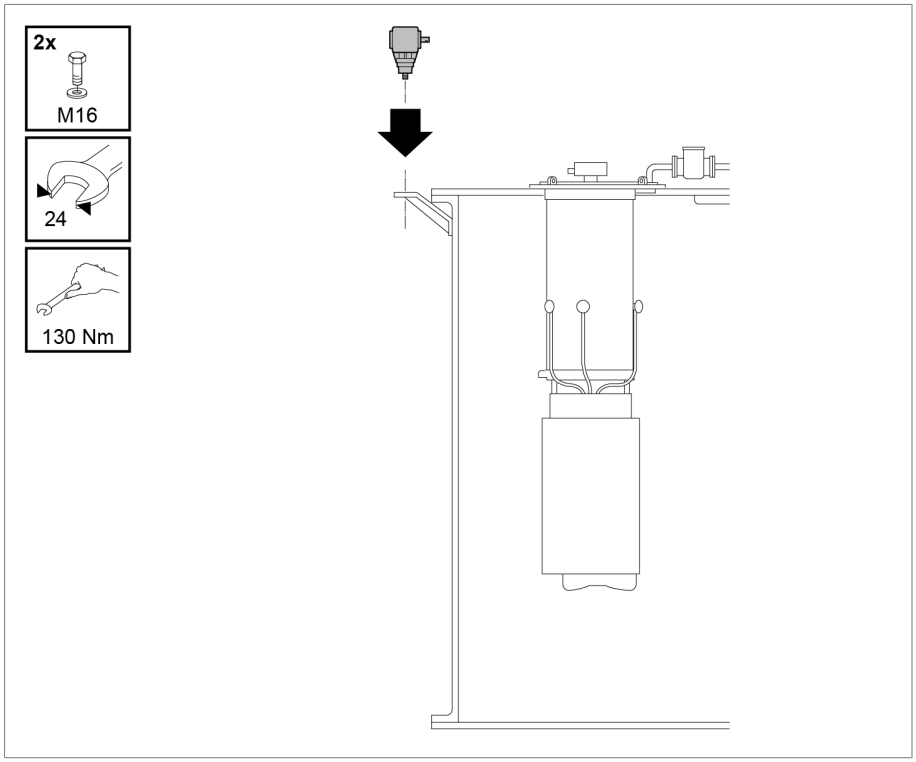

Figure 190: Bevel gear

3. Determine dimension A between shaft end of drive and shaft end of bevel gear. Shorten square tube to length of A – 9 mm.

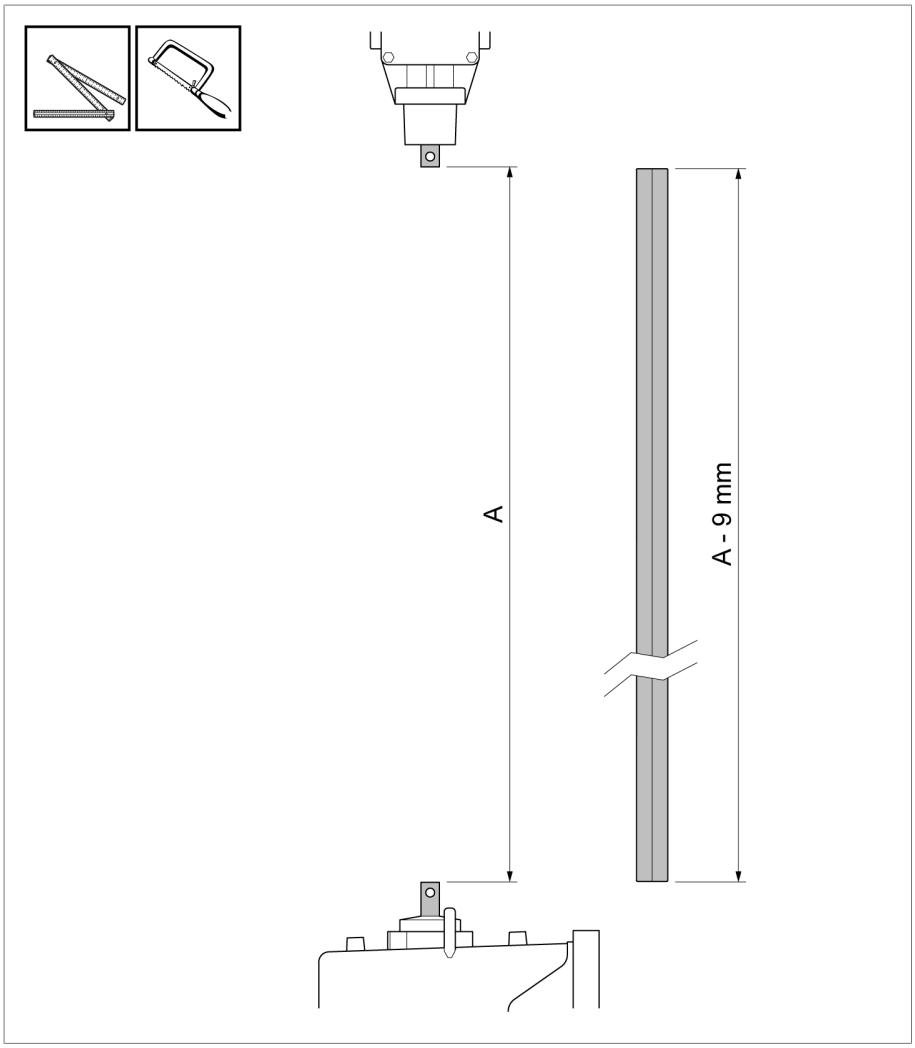

Figure 191: Shortening square tube

4. Deburr cut surfaces of square tube.

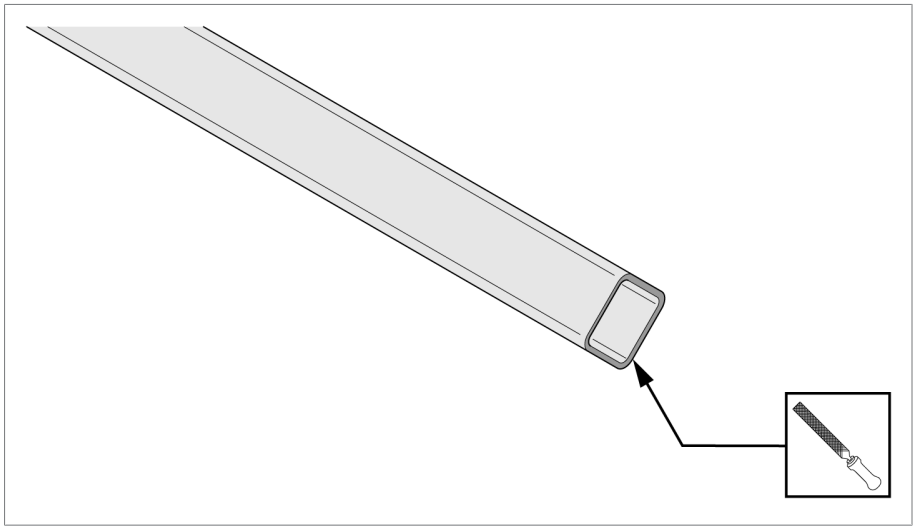

Figure 192: Deburring cut surfaces

5. Slide the loosely screwed together coupling part onto square tube until stop is reached.

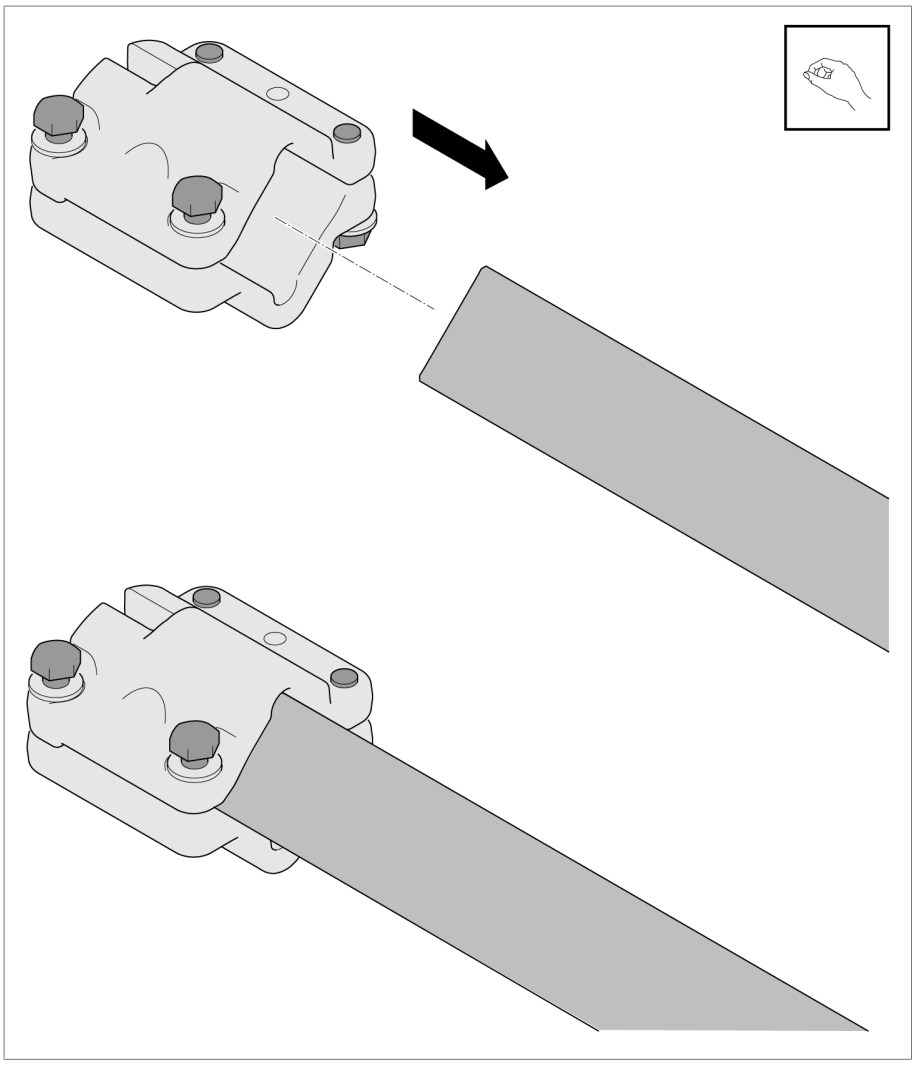

Figure 193: Slide coupling part onto square tube

6. Insert coupling bolt into shaft end of drive. GreasingCoupling part, Slide square tube with coupling part onto shaft end.

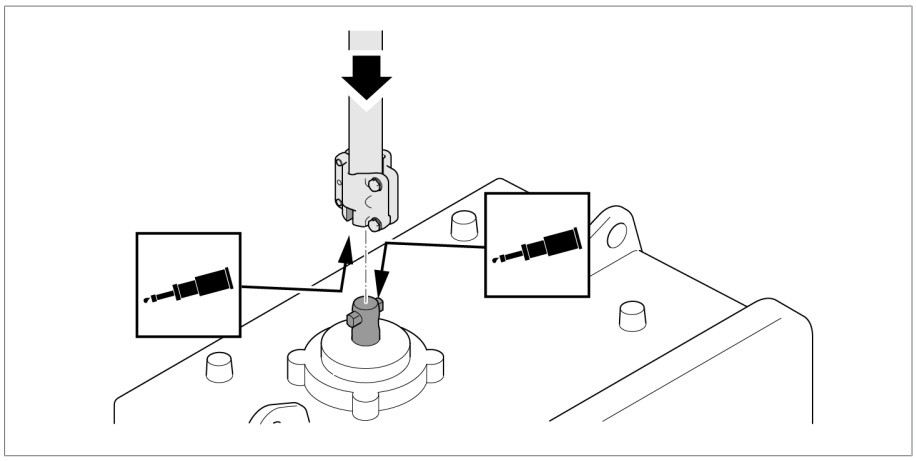

Figure 194: Sliding square tube with coupling part onto shaft end

7. Attach square tube to drive.

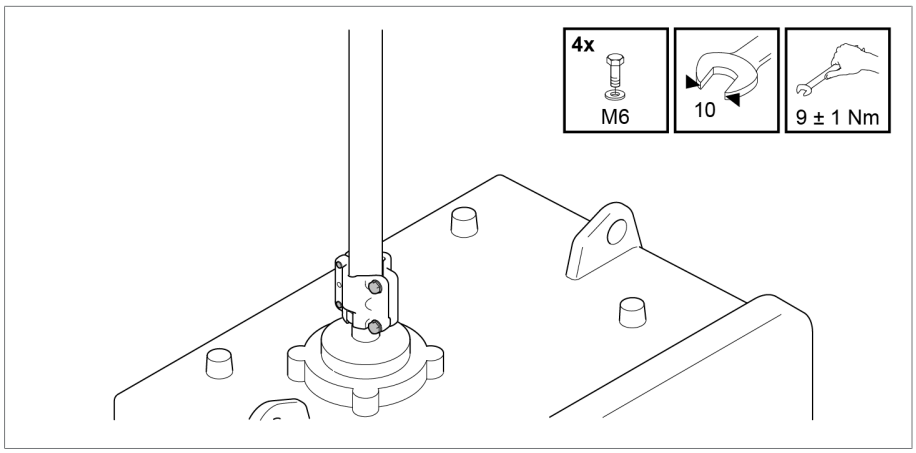

Figure 195: Attaching square tube to drive

8. Pivot square tube away from axis.

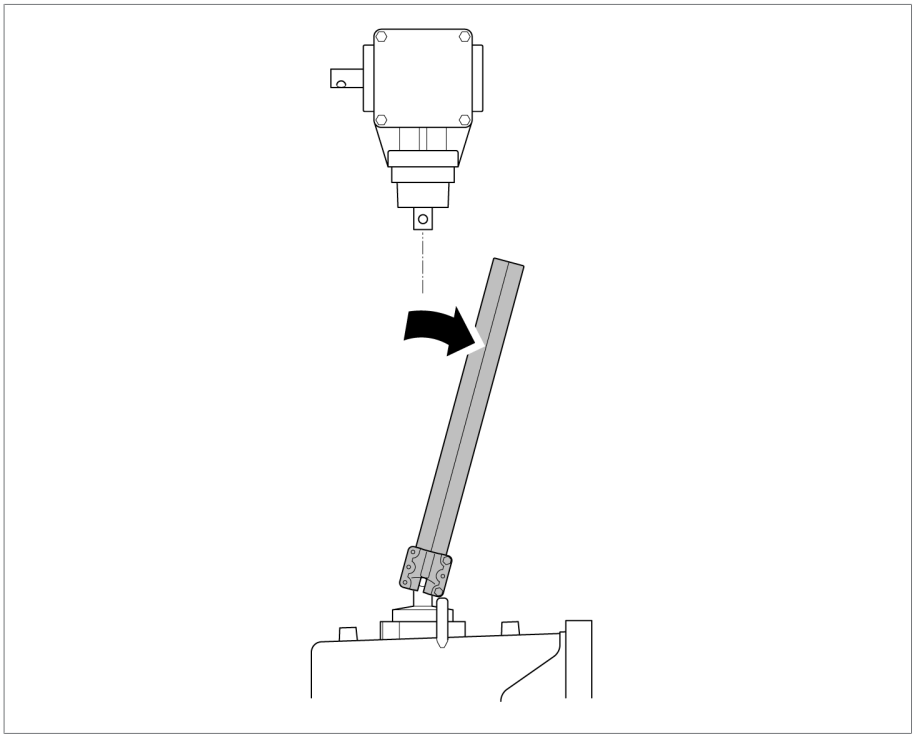

Figure 196: Pivoting square tube away from axis

9. When installing inner tube of telescopic protective tube, shorten on the side without slots if necessary. The minimum dimension for the overlap of the two protective tubes is 100 mm.

Inner tube must not be deformed and must be deburred in order to slide easily in the outer tube.

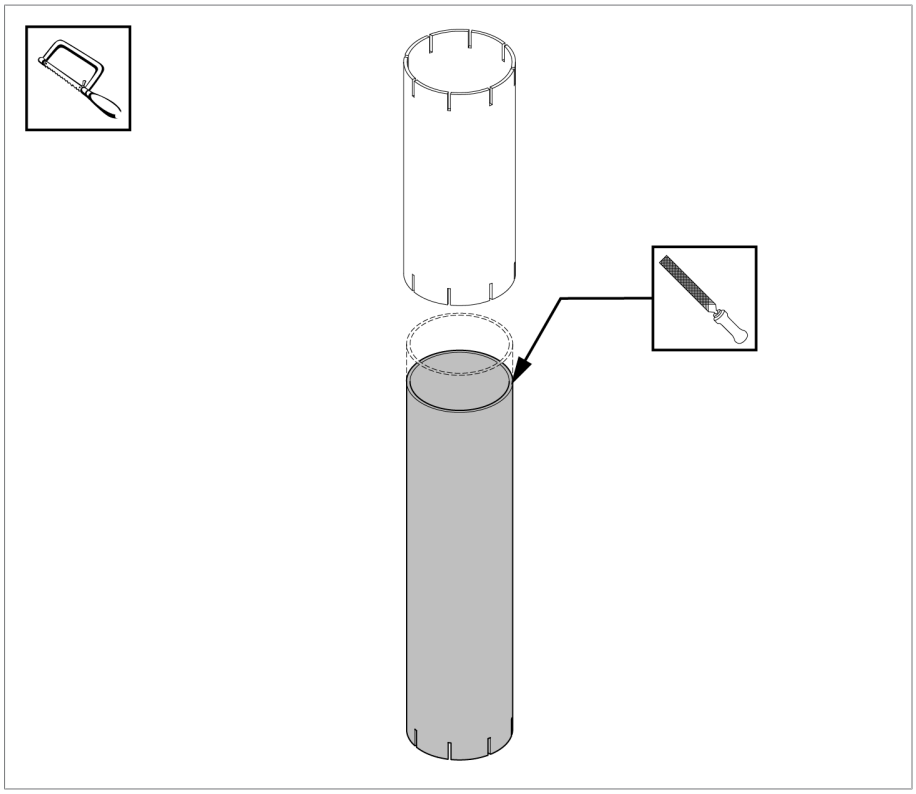

Figure 197: Deburring inner tube

Dimension A (= distance between shaft end of drive and shaft end of bevel gear)	Inner tube	Outer tube
170 mm...190 mm	Shorten to 200 mm	= 200 mm
191 mm...1130 mm	Dimension A + 20 mm	= 200 mm
1131 mm...1598 mm	= 700 mm	= 1150 mm
1599 mm...2009 mm	= 1150 mm	= 1150 mm

10. Slide outer tube over inner tube. When doing so, make sure that the non-slotted side of the inner tube is facing upwards. Slide telescopic protective tube onto square tube. Then slide hose clips over telescopic protective tube.

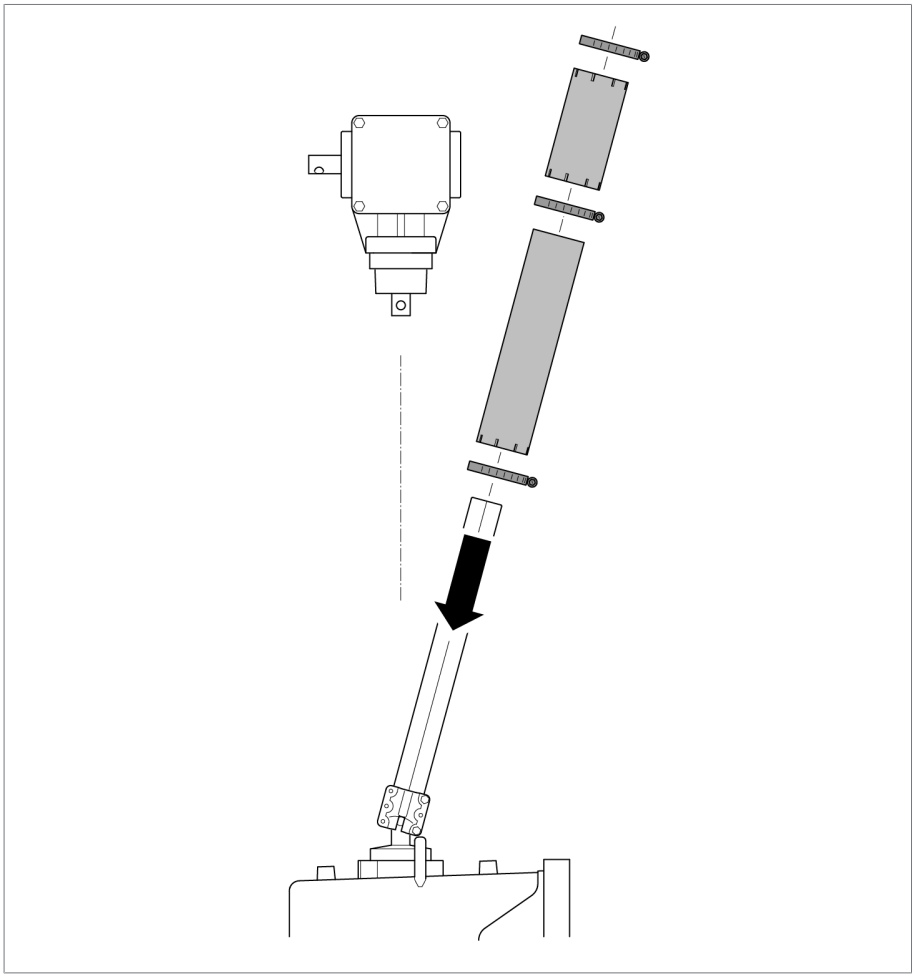

Figure 198: Sliding on telescopic protective tube

11. Place adapter ring over bearing collar of bevel gear and slide upwards. Insert coupling bolt into shaft end of bevel gear. Pivot square tube back to axis.

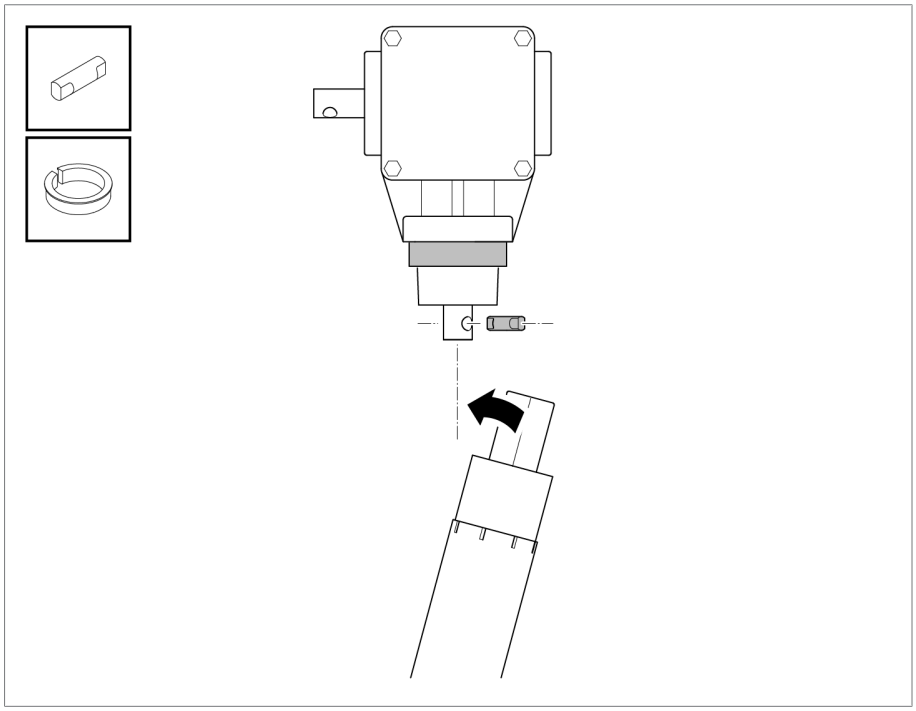

Figure 199: Fitting adapter ring and coupling bolt

12. Grease coupling brackets, coupling bolt and shaft end (e.g. ISOFLEX TOPAS L32) and secure square tube with coupling brackets on the bevel gear. Set a unilateral axial clearance of 3 mm between coupling bolt and upper coupling piece.

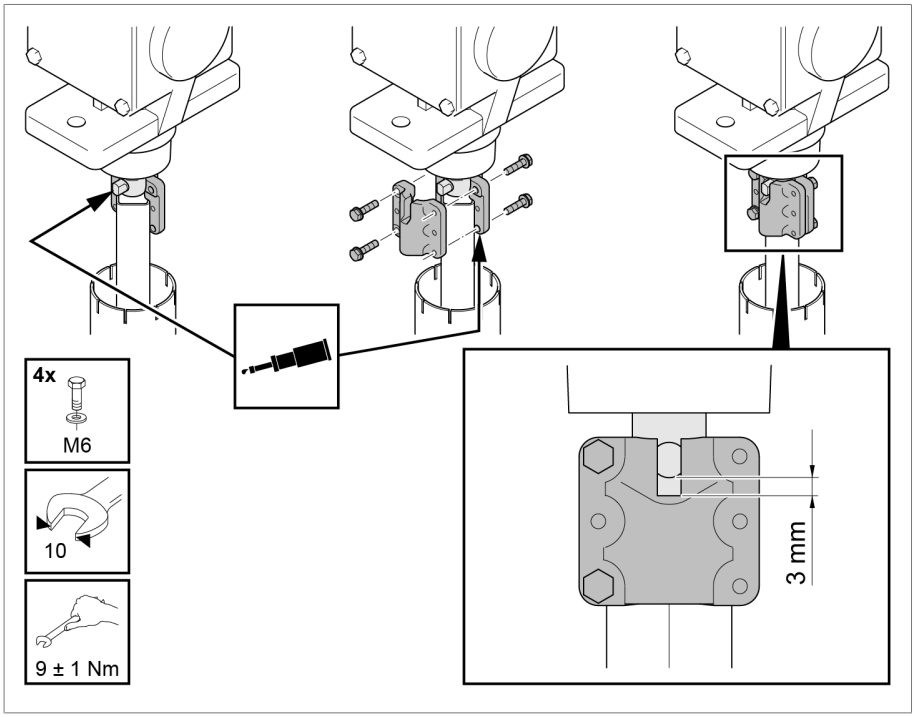

Figure 200: Mounting coupling brackets

13. Attach bottom protective tube (inner tube) with a hose clip to bearing collar of drive **1**. Then slide upper protective tube (outer tube) over adapter ring on bevel gear **2**. Secure upper protective tube to bottom protective tube with hose clip both at top end and at the connection point **3**.

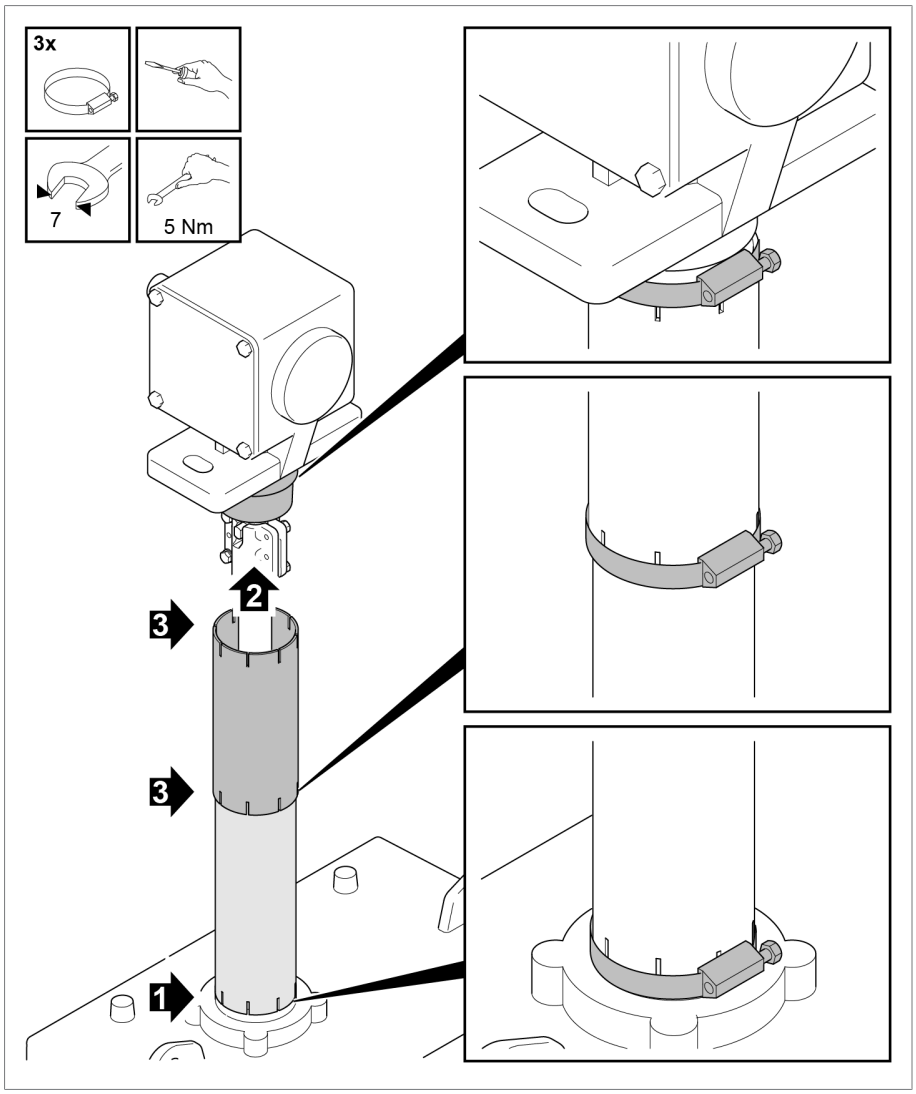

Figure 201: Mounting protective tube

5.4.4.2 Fitting a horizontal drive shaft without cardan joints

Permitted axial displacement

Minor axial displacement of the horizontal drive shaft is permitted as long as it does not exceed 35 mm per 1000 mm of square tube length (this corresponds to 2°).

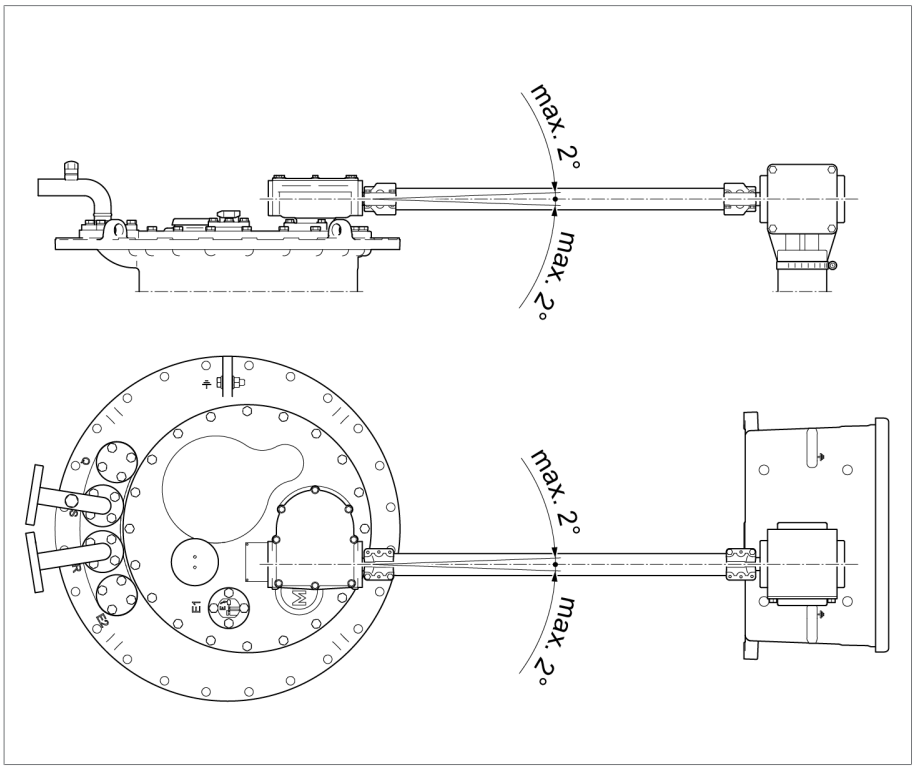

Figure 202: Permitted maximum axial displacement of horizontal drive shaft without cardan joint

Aligning upper gear unit on the on-load tap-changer head

In order to correctly install the horizontal drive shaft, under certain circumstances you may have to first align the upper gear unit such that the horizontal drive shaft is flush with the shaft end of the upper gear unit.

To do so, proceed as follows:

1. **NOTICE!** Damage to the on-load tap-changer due to alignment of the gear unit when the oil compartment is not completely full.Ensure that the oil compartment is filled completely with insulating fluid.

2. Loosen screws and turn pressure ring segments to one side.

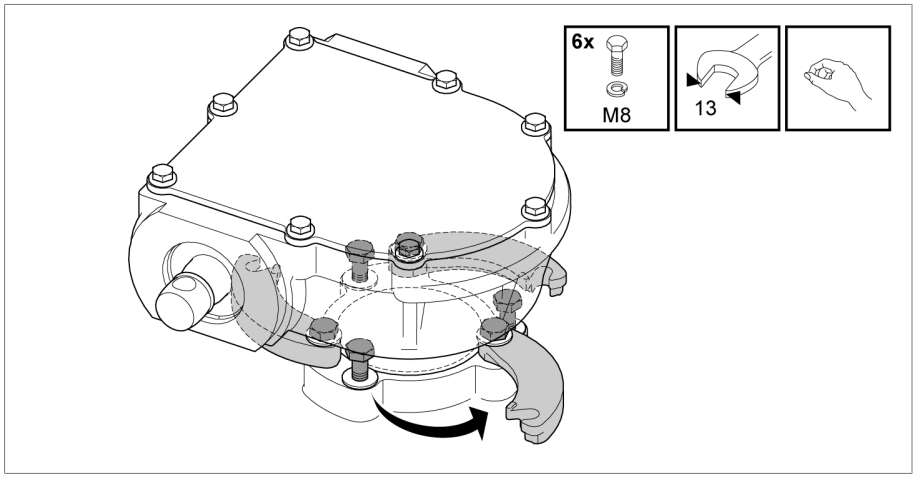

Figure 203: Pressure ring segments

3. **NOTICE!** Align gear unit such that the horizontal drive shaft is flush with the drive shaft of the gear unit. While aligning the gear unit, turn the unit's drive shaft such that its output shaft retains its original position. Failure to do so may result in damage to the de-energized tap-changer and transformer when starting up.

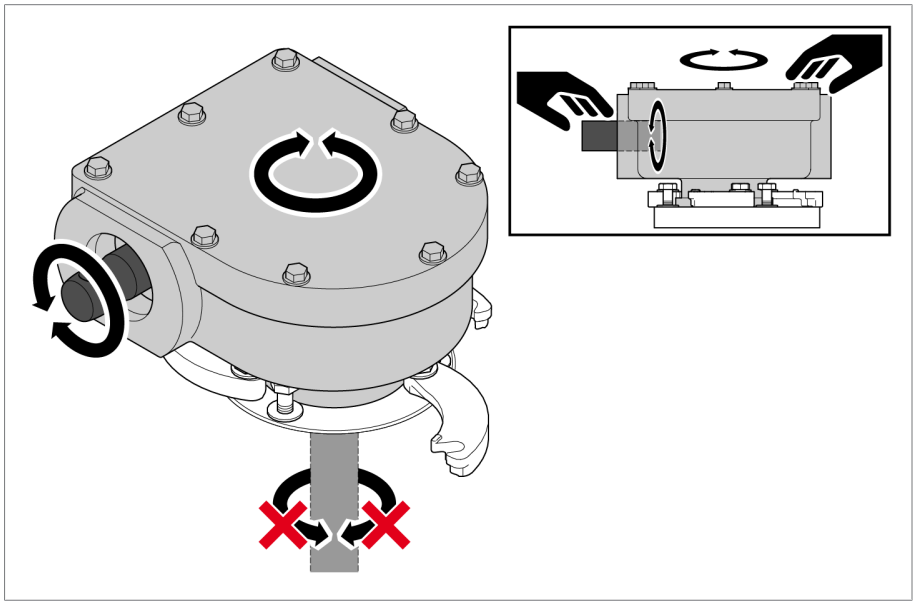

Figure 204: Aligning gear unit

4. Swivel pressure ring segments back towards gear unit and tighten screws. Ensure that the spring washer is between the screw head and pressure ring segment and that the pressure ring segments are firmly in contact with the gear unit housing.

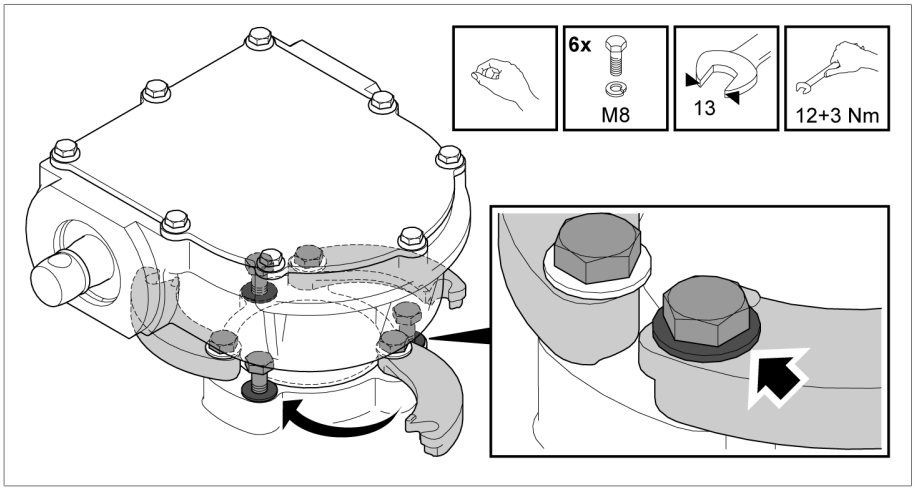

Figure 205: Securing pressure ring segments

Fitting horizontal drive shaft

You can turn the temperature sensor if this is necessary for fitting the drive shaft.

To fit the horizontal drive shaft, proceed as follows.

1. Calculate dimension A between shaft end of upper gear unit and shaft end of bevel gear and shorten square tube to length A–9 mm.

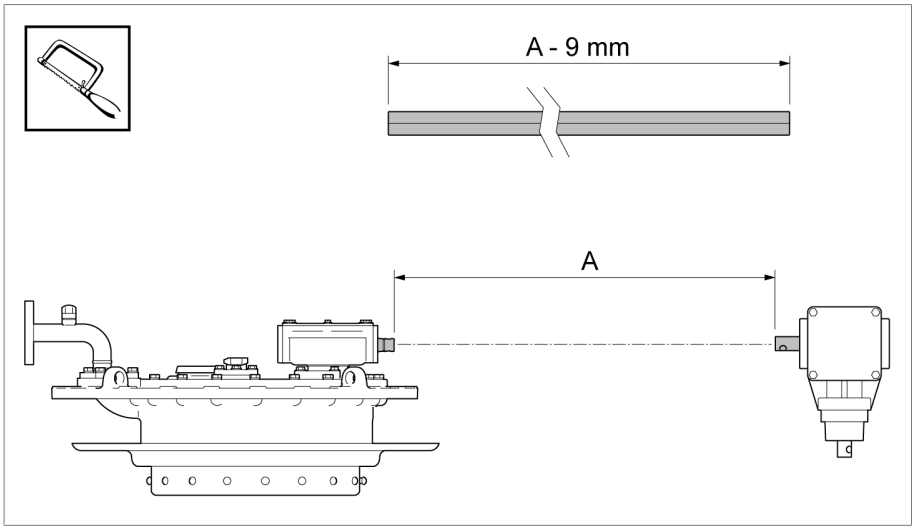

Figure 206: Shortening square tube

2. Calculate inside width B between housings of upper gear unit and bevel gear. Cut down the protective cover to B-2 mm and deburr the cut edges. Protect protective cover against corrosion with a coat of paint.

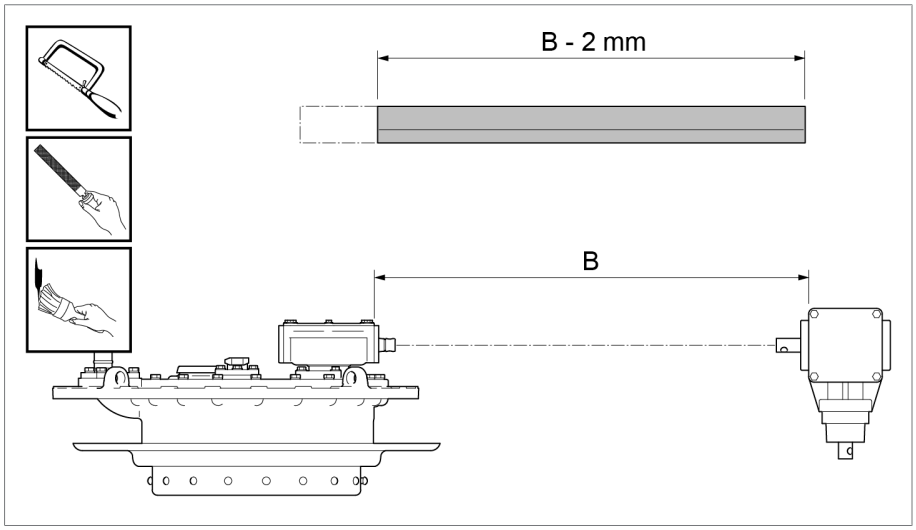

Figure 207: Shortening, deburring, and coating protective cover

3. Slide loosely screwed together coupling part onto square tube until stop is reached.

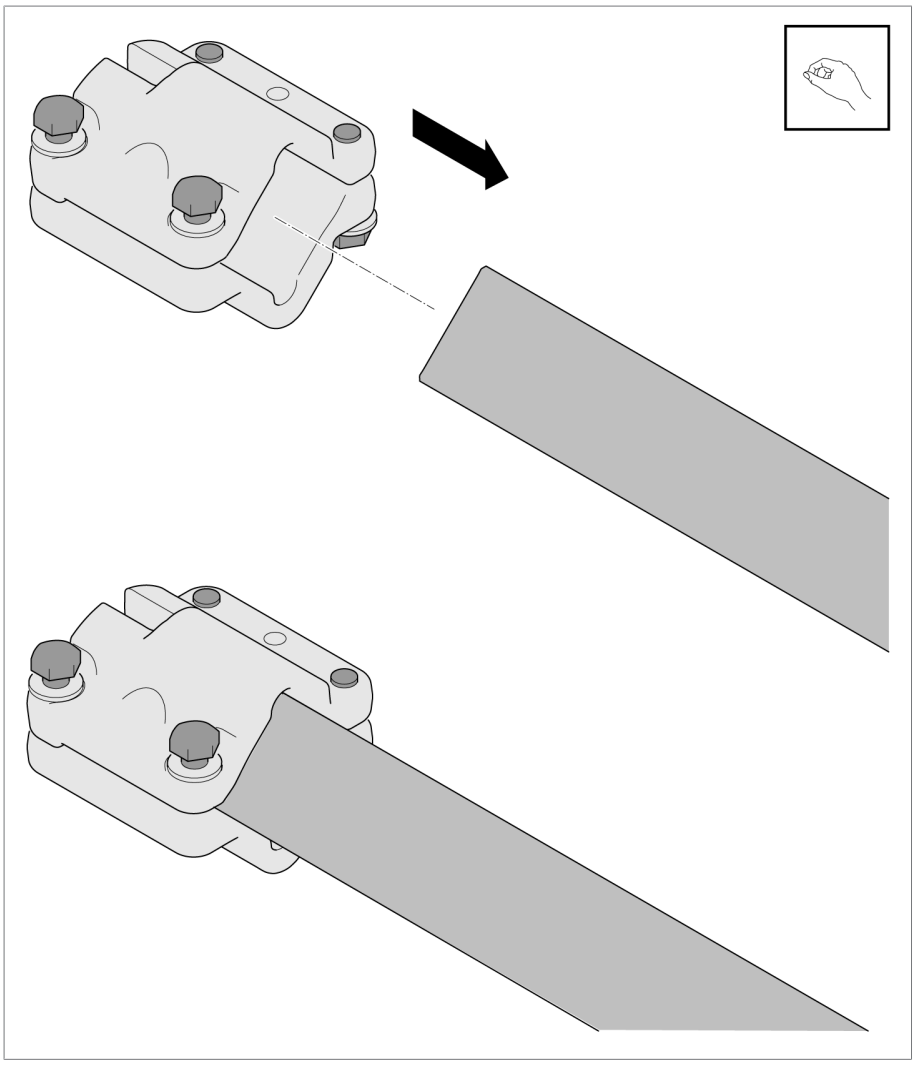

Figure 208: Sliding coupling part onto square tube

4. Grease coupling bolt, coupling part and shaft end of the bevel gear (e.g. ISOFLEX TOPAS L32) and insert coupling bolt into shaft end. Thread hose clip onto square tube and slide square tube with coupling part onto shaft end.

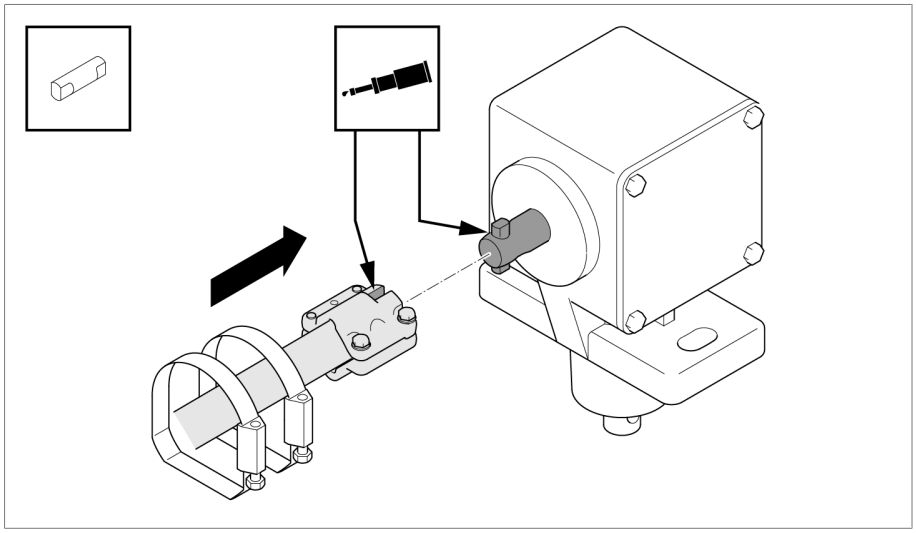

Figure 209: Slide square tube with coupling part onto shaft end

5. Secure square tube on bevel gear.

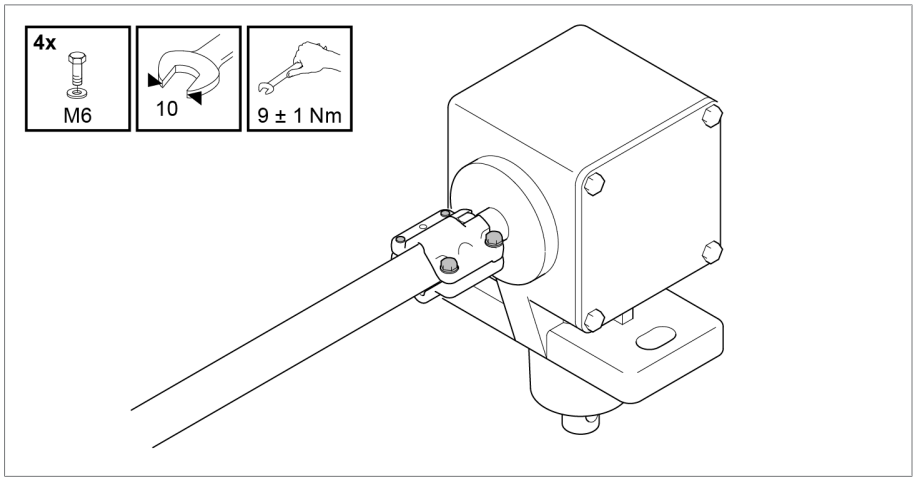

Figure 210: Securing square tube on bevel gear

6. Grease coupling bolt, coupling brackets and shaft end of the upper gear unit (e.g. ISOFLEX TOPAS L32) and insert coupling bolt into shaft end. Secure square tube with coupling brackets on upper gear unit.

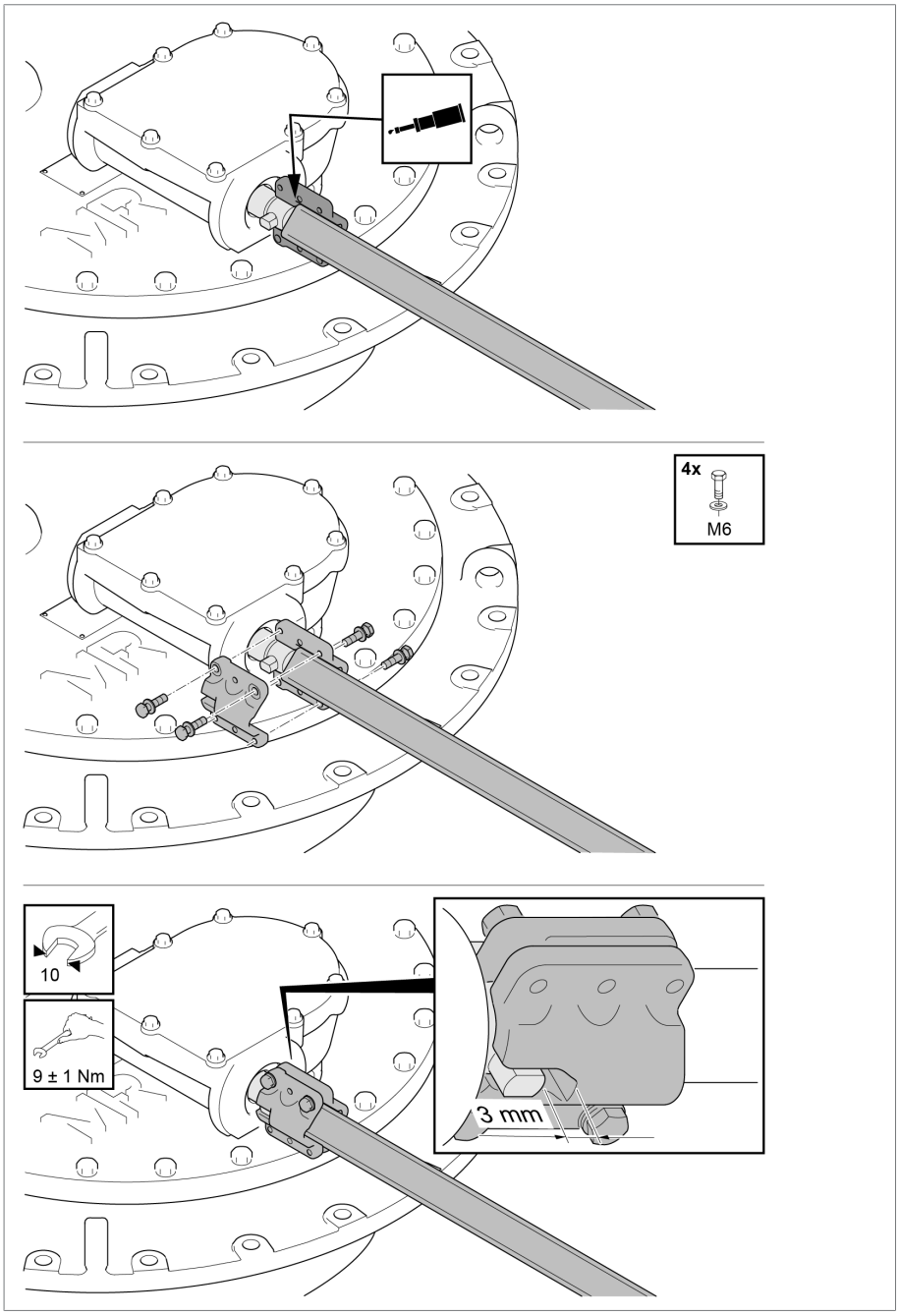

Figure 211: Secure square tube on upper gear unit.

7. Attach shortened protective cover to housing lugs on the on-load tap-changer head and bevel gear. Secure each end of protective cover with a hose clip.

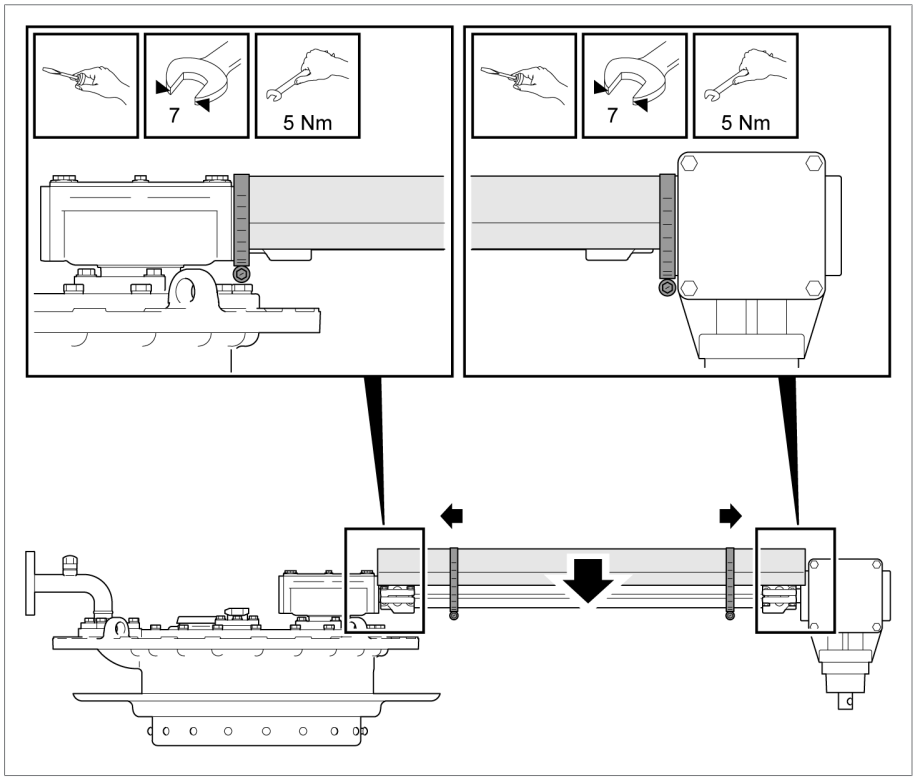

Figure 212: Fitting protective cover

8. If using a bearing block or angle gear, attach caps to the protective cover.

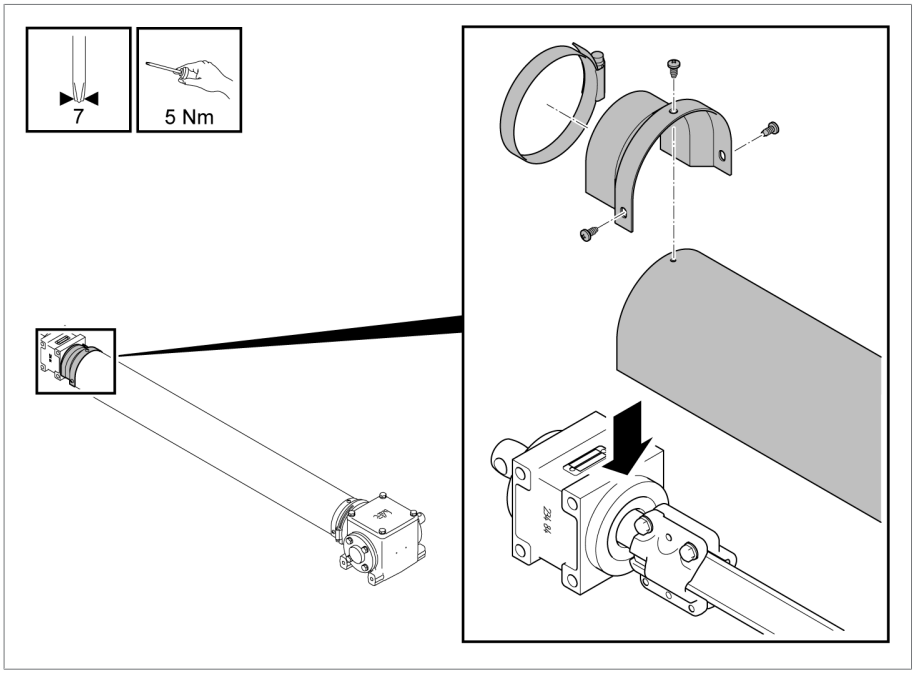

Figure 213: Bearing block caps

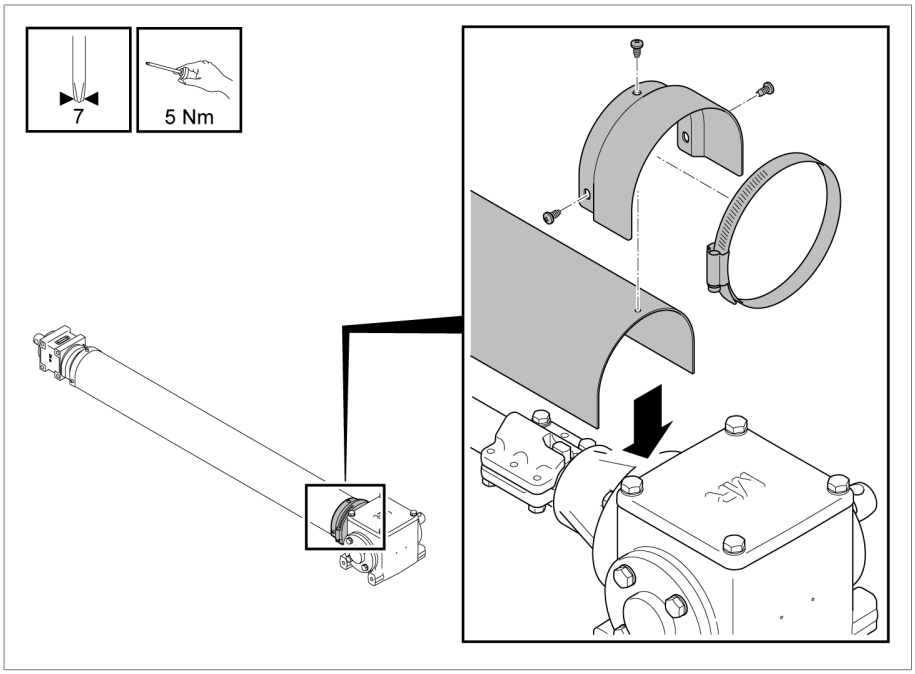

Figure 214: Angle gear caps

5.4.4.2.1 On-load tap-changer sets and combinations

For two-column and three-column on-load tap-changer models, you must couple the on-load tap-changer heads above the transformer cover.

Proceed as follows:

1. Check that the operating positions of all on-load tap-changers are identical (inspection window in the on-load tap-changer head). Each on-load tap-changer must be in the adjustment position.
2. Turn the pressure segments of upper gear units to one side by loosening the 6 M8 bolts / wrench size 13.
3. **NOTICE!** Move upper gear units into the required installation position only by turning the drive shafts of the upper gear units with loosened pressure segments. Otherwise, the on-load tap-changer may be damaged when aligning the upper gear unit.
4. Swivel pressure segments back towards gear unit and tighten screws (tightening torque 15 Nm). Ensure that the spring washer is between the screw head and pressure ring segment and that the pressure ring segments are firmly in contact with the gear unit housing.
5. Note arrow on drive shaft flange under the stamped serial number. The direction of the arrow indicates the direction of rotation when turning the hand crank of the motor-drive unit clockwise and must be identical for all gear units.
6. Move each on-load tap-changer separately one step by rotating the shaft ends counter-clockwise until the on-load tap-changer operates.
7. Check that the operating positions of all on-load tap-changer heads are the same.
8. Fit horizontal drive shaft between the on-load tap-changer heads. Individually couple each on-load tap-changer. Start with the on-load tap-changer which is closest to the motor-drive unit.
9. **NOTICE!** After installing all drive shafts, continue cranking another 2.5 revolutions counter-clockwise on the drive shaft of the upper gear unit to correctly complete the tap-change operation. An incomplete tap-change operation may damage the on-load tap-changer.
10. Switch on-load tap-changer back into adjustment position by turning drive shaft clockwise. Once the adjustment position has been reached and the diverter switch has undergone the tap-change operation, continue cranking the drive shaft of the upper gear unit by another 2.5 revolutions clockwise to correctly complete the tap-change operation.
11. Check operation of all on-load tap-changers. A slight time delay is permitted.
12. Check that the operating positions of all on-load tap-changer heads are the same.
13. Fit vertical drive shaft.

5.4.4.3 Fitting drive shaft with cardan joints

Installation of the drive shaft with cardan joints is mainly designed as a vertical drive shaft between motor-drive unit and bevel gear.

Technically, a horizontal design is also possible. However, if using a horizontal design please note that the protective cover supplied must be adapted accordingly and a cardan joint with an inner hub diameter of 25 mm must be used if you want to use the cardan joint on the upper gear unit.

Permitted axial displacement

An axial displacement of 20° is permitted for the vertical and horizontal drive shaft with cardan joints.

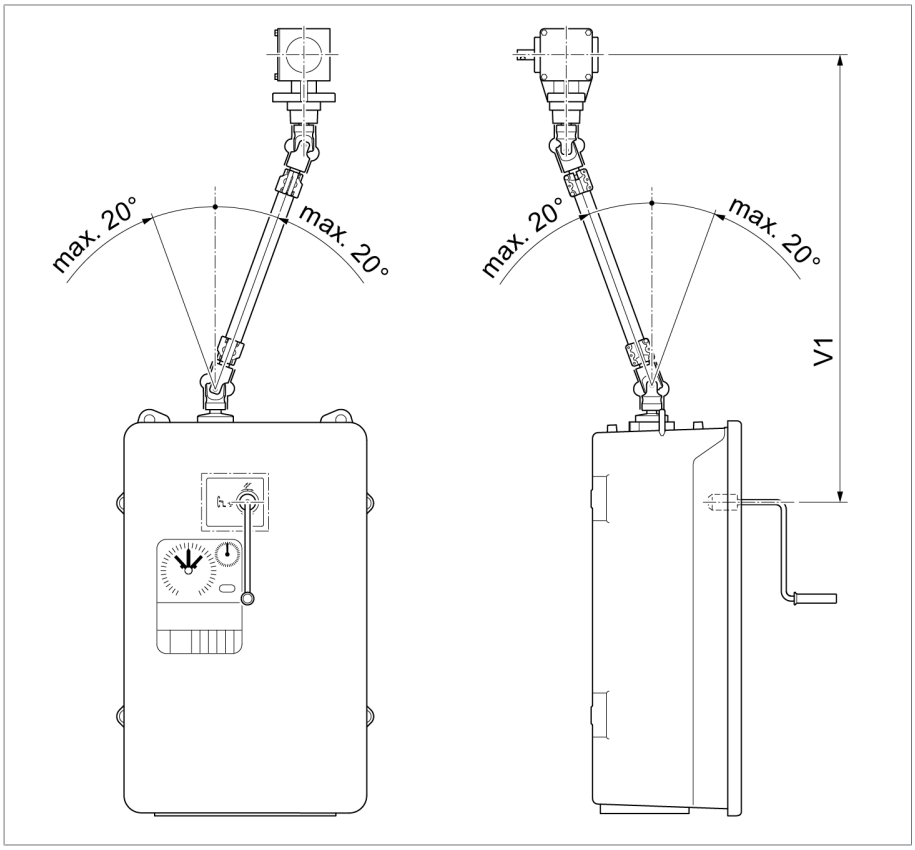

Figure 215: Permitted maximum axial displacement of vertical drive shaft with cardan joints

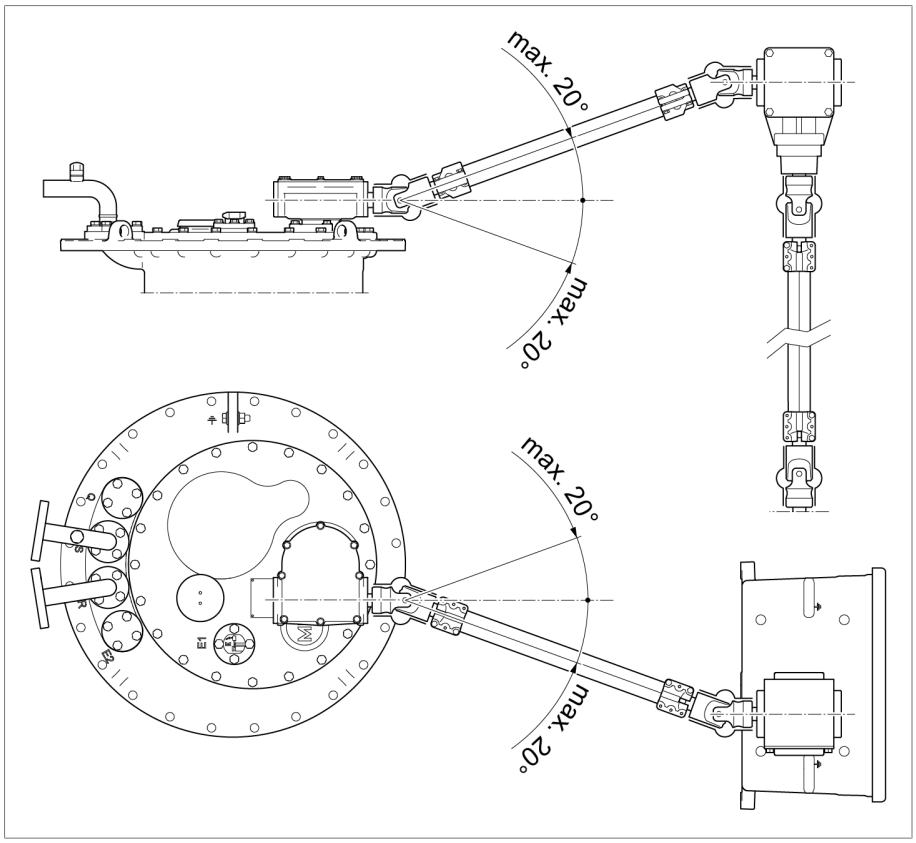

Figure 216: Permitted maximum axial displacement of horizontal drive shaft with cardan joints

NOTICE

Damage to property!

Improper mounting of the cardan joint may result in damage or malfunctions.

- ► Ensure that the folding cardan joint does not damage the expansion bellows during mounting.
- ► Ensure that the angle of deflection α is no greater than 20°.
- ► Ensure that the angle of deflection α is the same on both cardan joints.

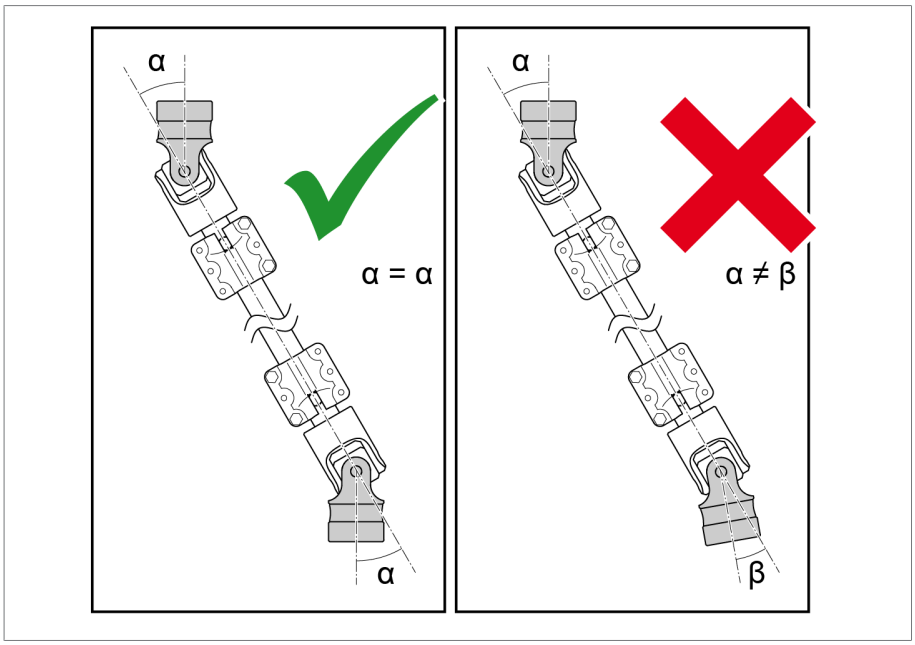

Figure 217: Angle of deflection α

To fit the drive shaft with cardan joints, proceed as follows:

1. Grease coupling bolts, coupling brackets, and shaft ends, e.g. ISOFLEX TOPAS L 32.

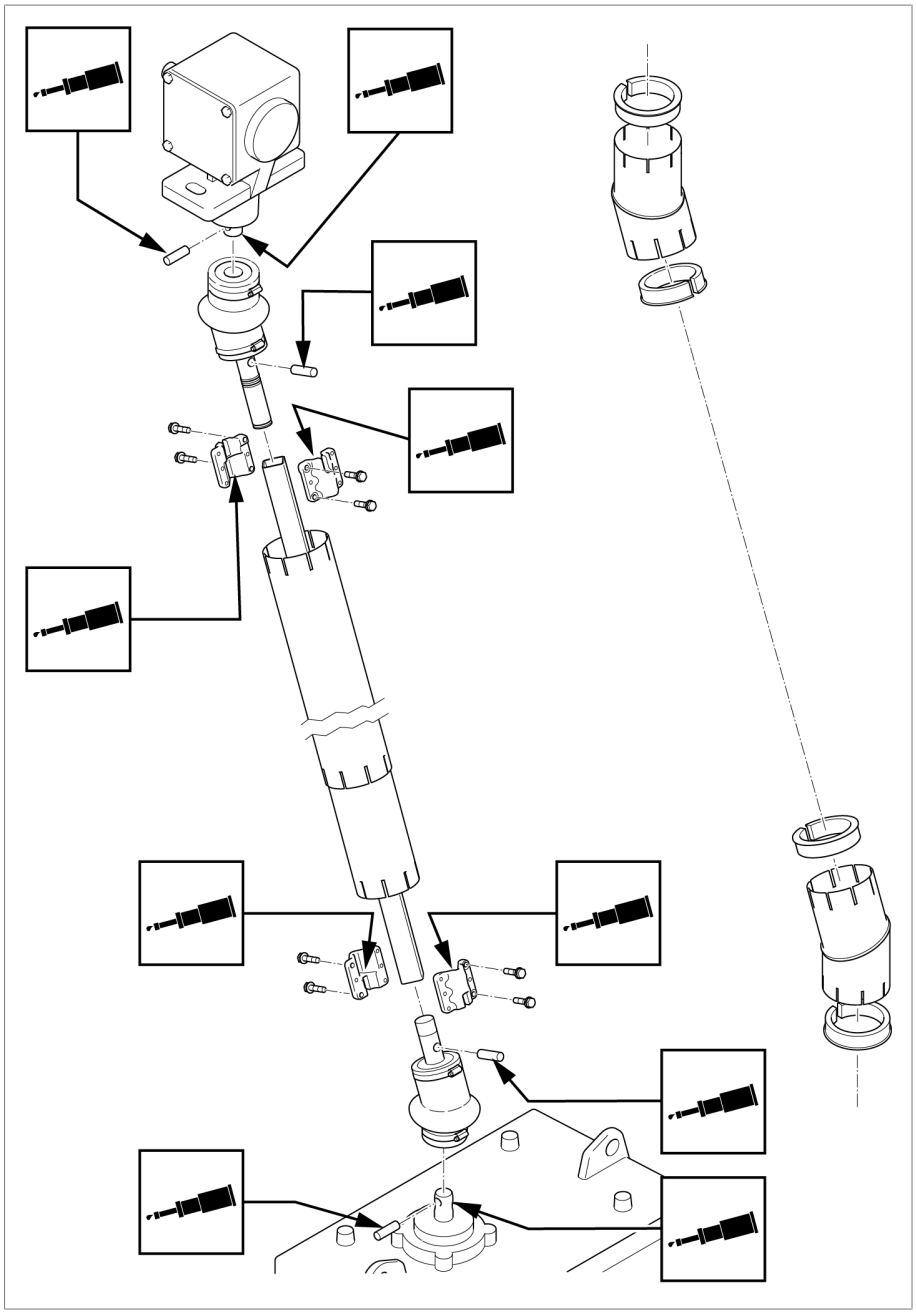

Figure 218: Greasing coupling bolts, coupling brackets, and shaft ends

2. Insert adapter rings into the collar of the rotating protective tube **1**. Fit the two parts of pivotable protective tube together **2** and turn them towards one another **3** to set the corresponding angle.

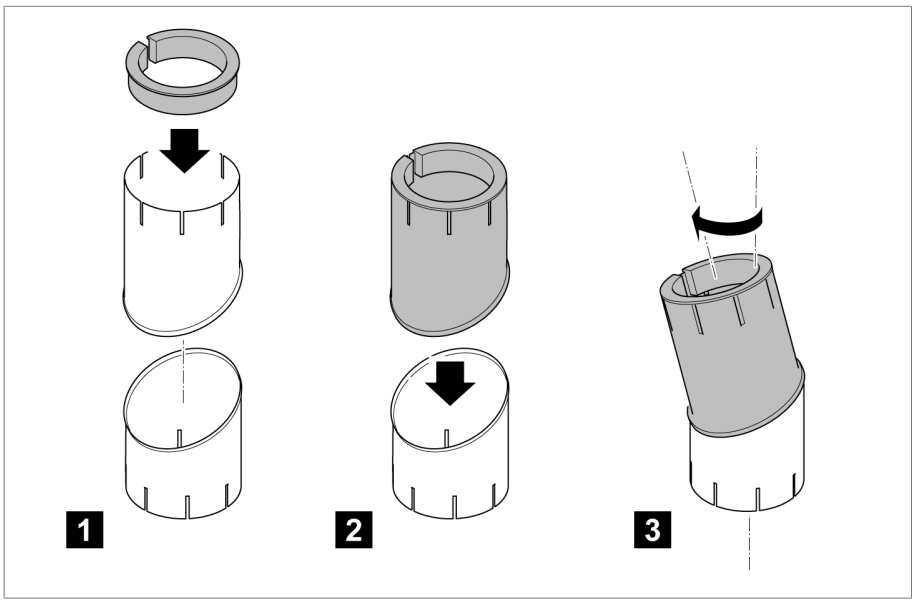

Figure 219: Inserting adapter in pivotable protective tubes

3. When supplied, the cardan joints are fitted with coupling bolts **1**. To mount on the shaft end, the following steps must be taken: Remove hose clip **2**. Slide up expansion bellows **3**. Remove coupling bolt **4**. Slide cardan joint over device's output shaft **5**. Push in coupling bolt **6**. Slide expansion bellows over this **7**. Secure expansion bellows with hose clip **8**.

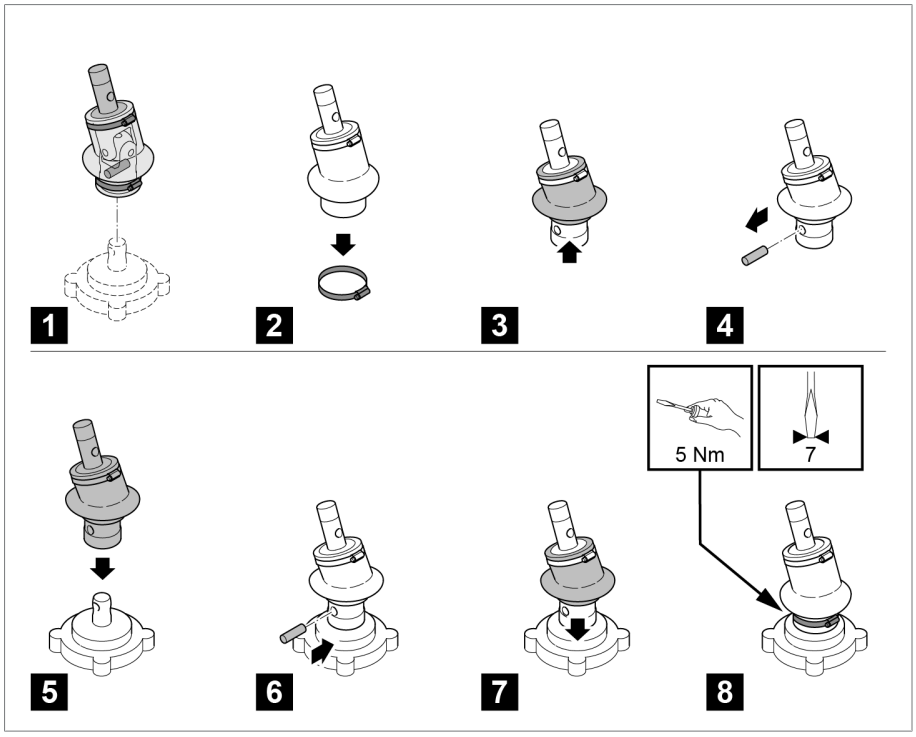

Figure 220: Mounting cardan joints

4. Connect shorter cardan joint supplied to shaft end of motor-drive unit with coupling bolt.

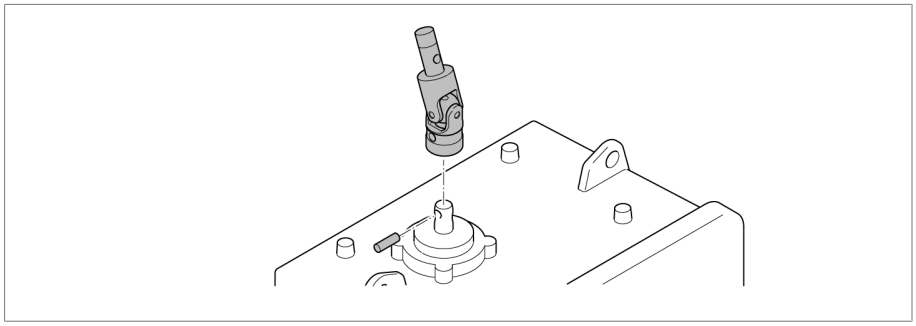

Figure 221: Attaching cardan joint on shaft end of motor-drive unit

5. **NOTICE!** Attach second, longer cardan joint to the bevel gear such that the position of both cardan joint lugs is the same on the bevel gear and motor-drive unit. If this is not done, damage or malfunctions may result.

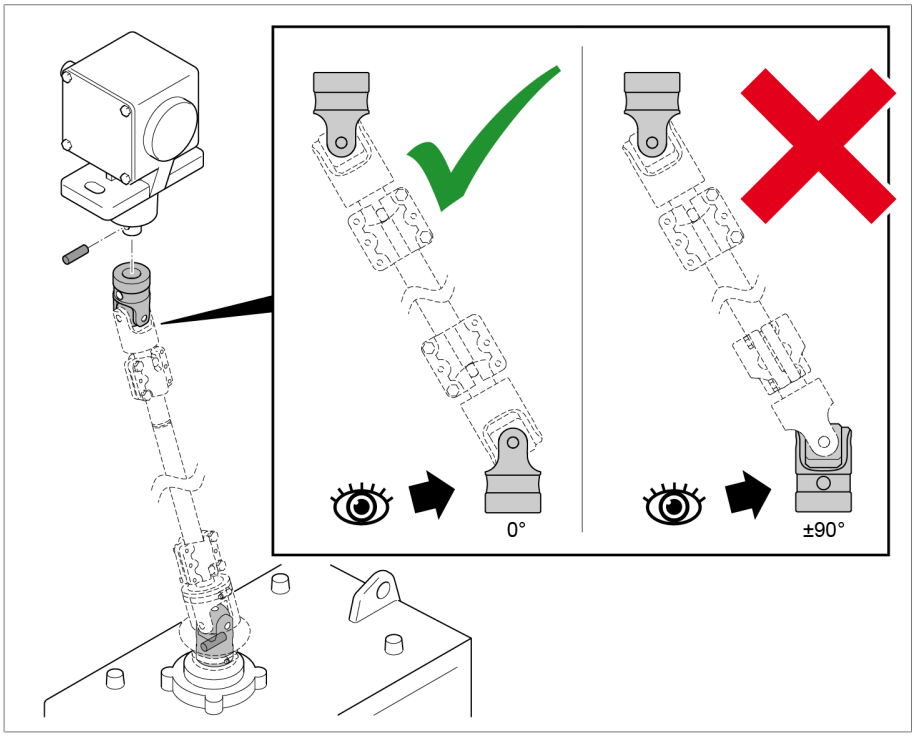

Figure 222: Fitting second cardan joint on bevel gear

6. Secure expansion bellows with hose clip.

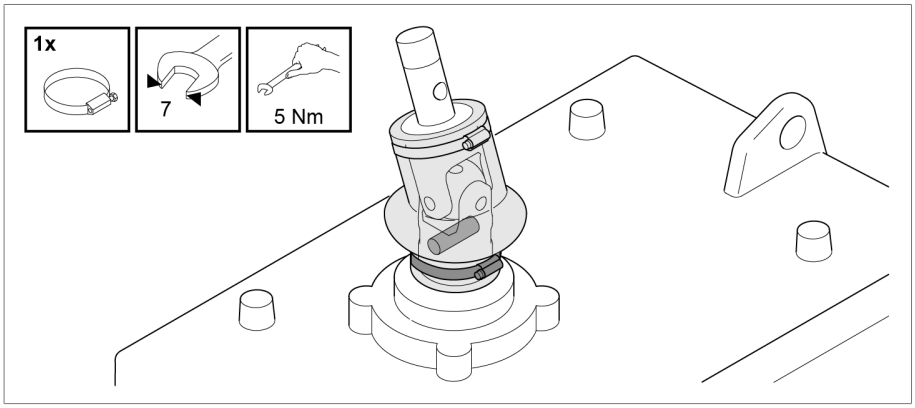

Figure 223: Securing expansion bellows with hose clip

7. Provisionally connect loose shaft ends of the joints to an angle bar and align so that they are in line.

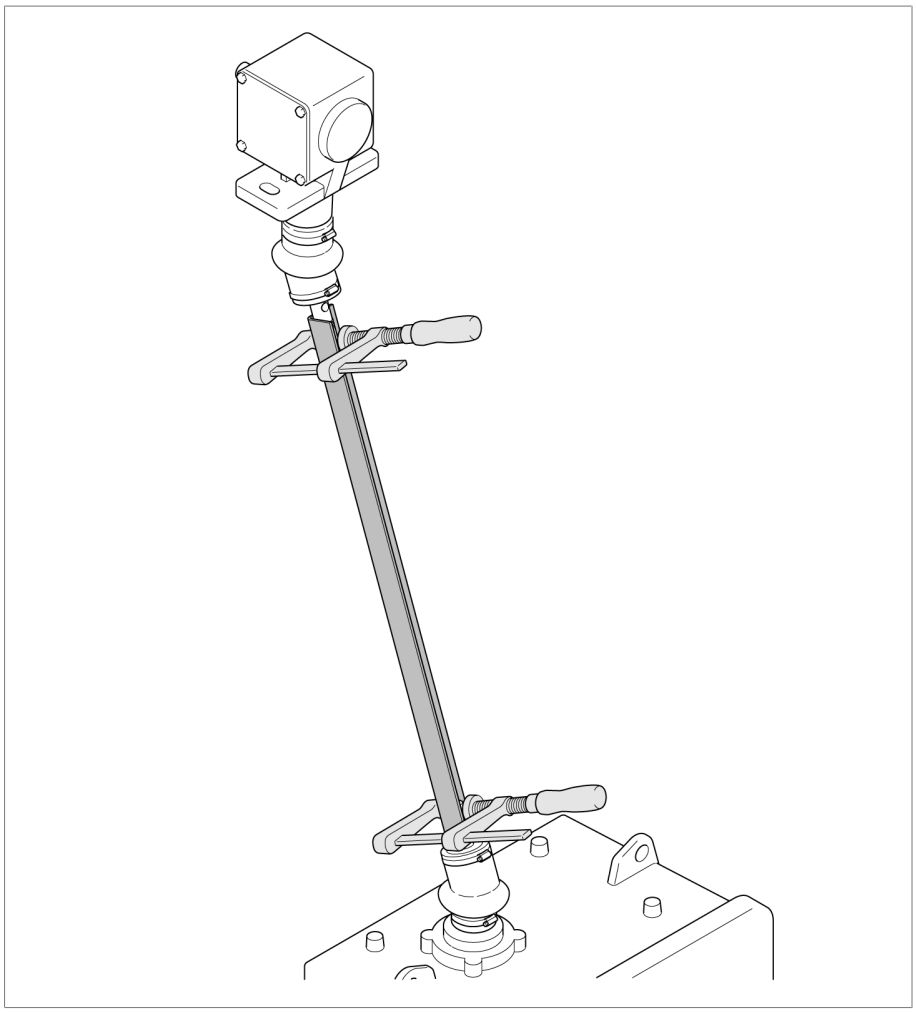

Figure 224: Connecting shaft ends with angle bar

8. Determine dimension A between the shaft ends. Cut square tube to LR = A + 106 mm (LR = length of square tube). Deburr cut surfaces of square tube.

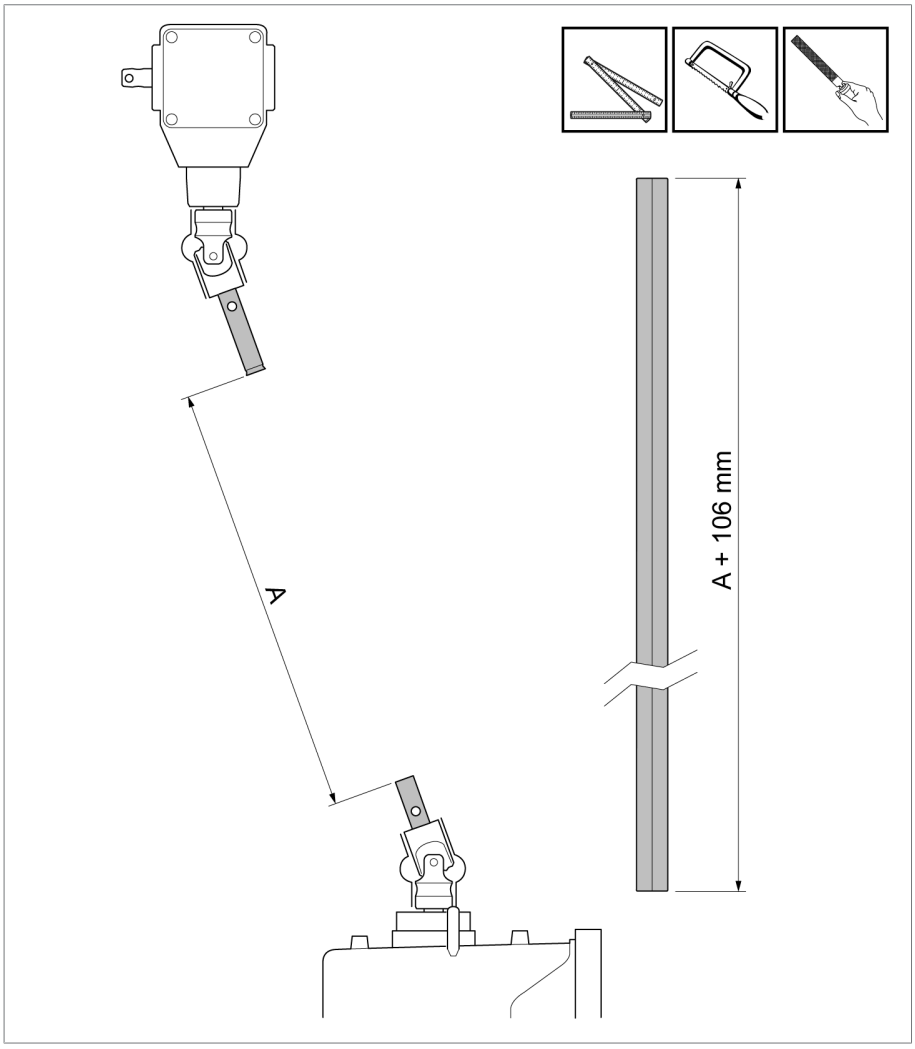

Figure 225: Shortening square tube

9. Before mounting, shorten both telescopic tubes to dimension A/2 + 120 mm (A = dimension between both cardan joint ends) and deburr.

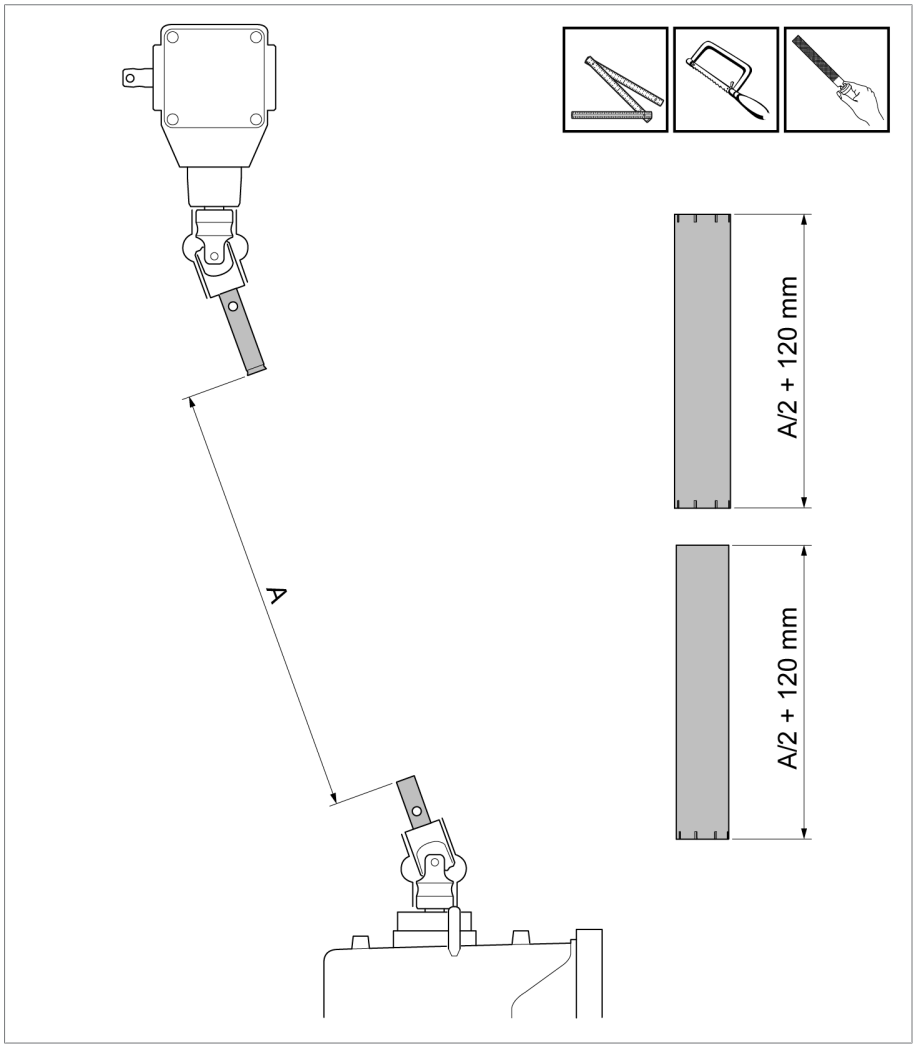

Figure 226: Shortening telescopic tubes

10. Fit one adapter ring to bearing collar of motor-drive unit and fit other adapter ring to bearing collar of bevel gear.

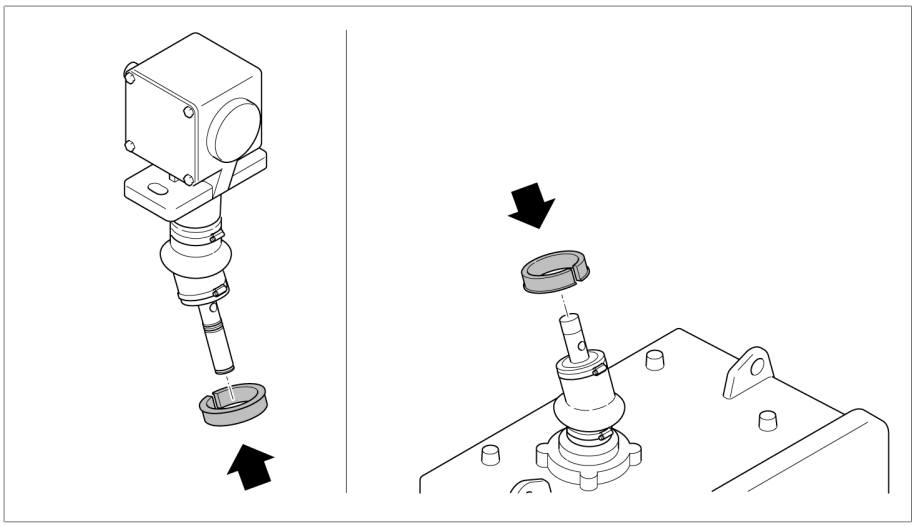

Figure 227: Fitting adapters

11. Slide previously shortened and deburred square tube over upper cardan joint end until stop is reached.

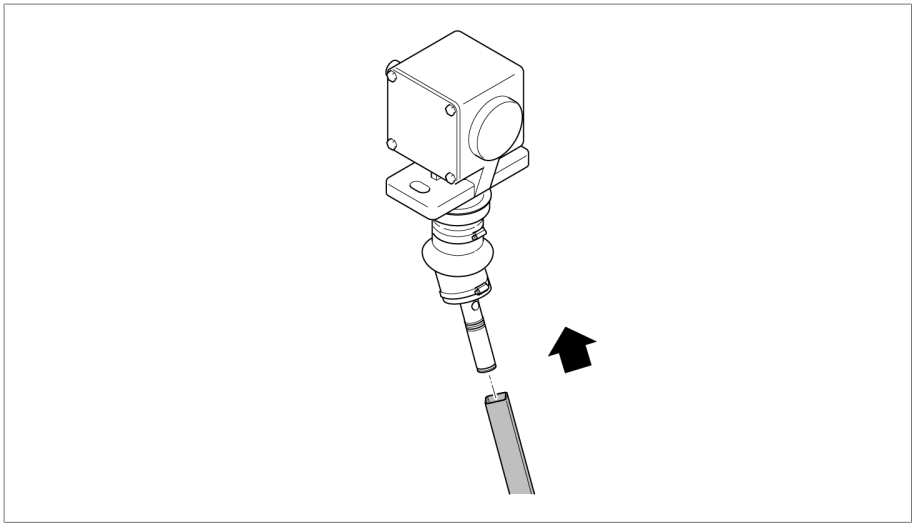

Figure 228: Sliding square tube over upper cardan joint end

12. Thread upper flexible protective tube with long outlet up onto square tube from below.

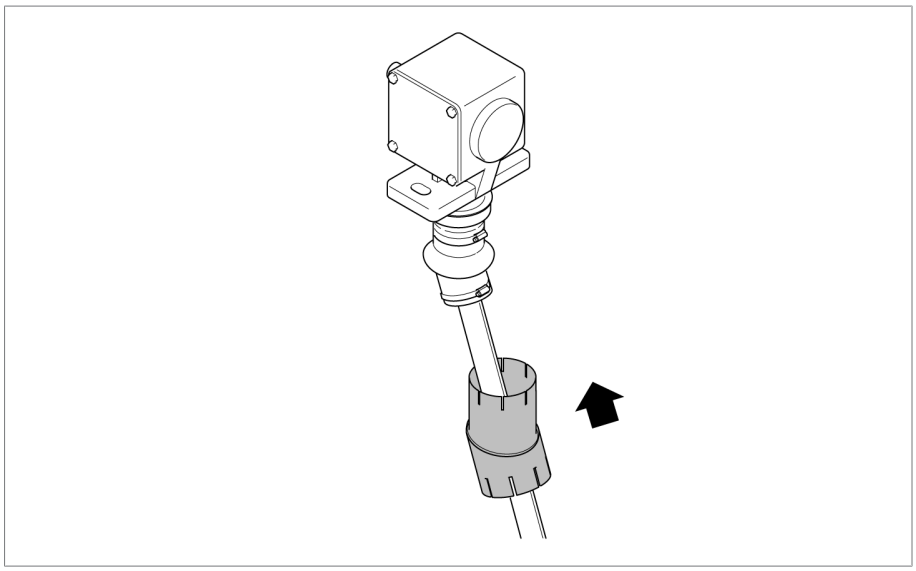

Figure 229: Sliding flexible protective tube over square tube

13. Slide inner tube into outer tube such that the slotted sides of the outer and inner tube are both facing down. Thread the hose clips.

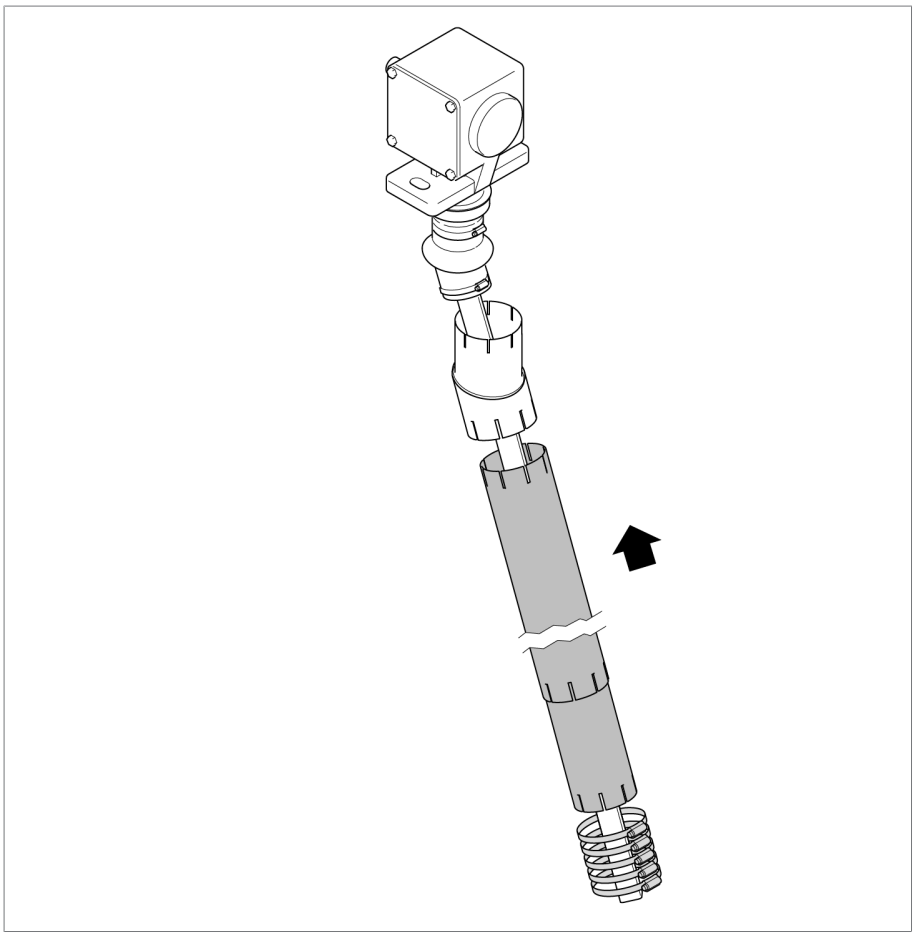

Figure 230: Sliding on telescopic tubes

14. Slide everything up and secure with a screw clamp.

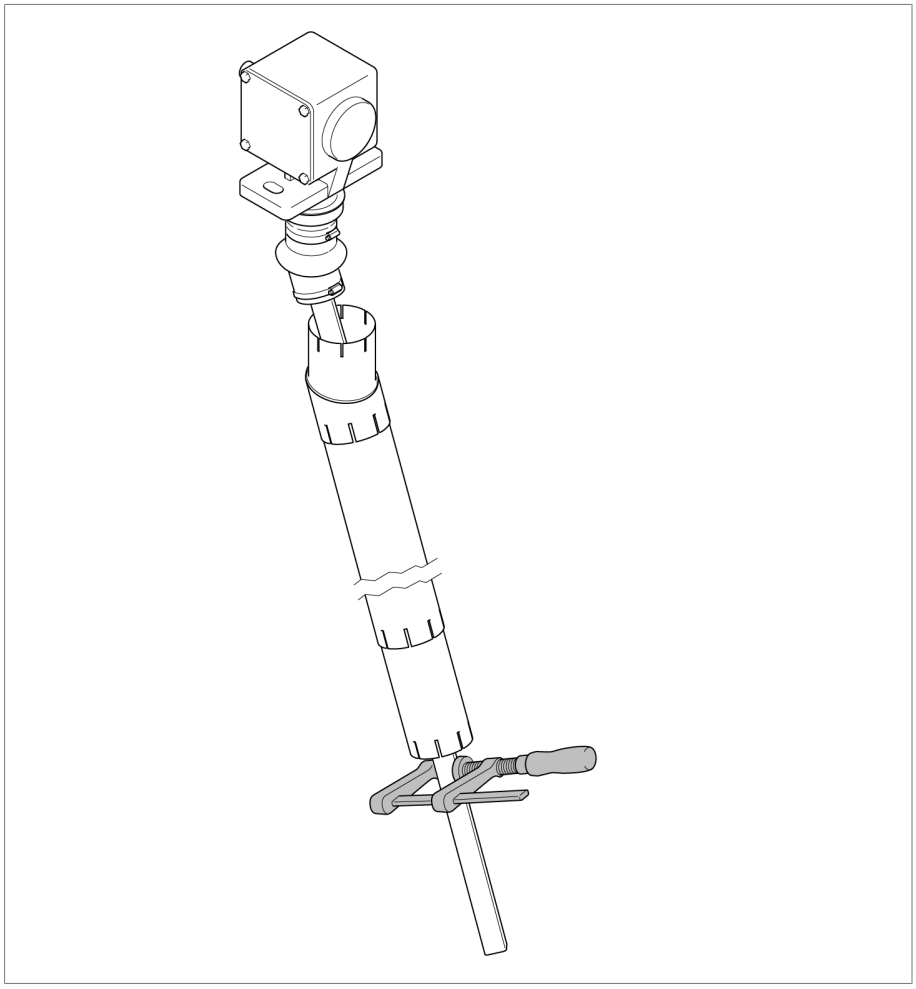

Figure 231: Secure everything with a screw clamp

15. Slide bottom flexible protective tube (also with long outlet up) on to the square tube and secure with screw clamp.

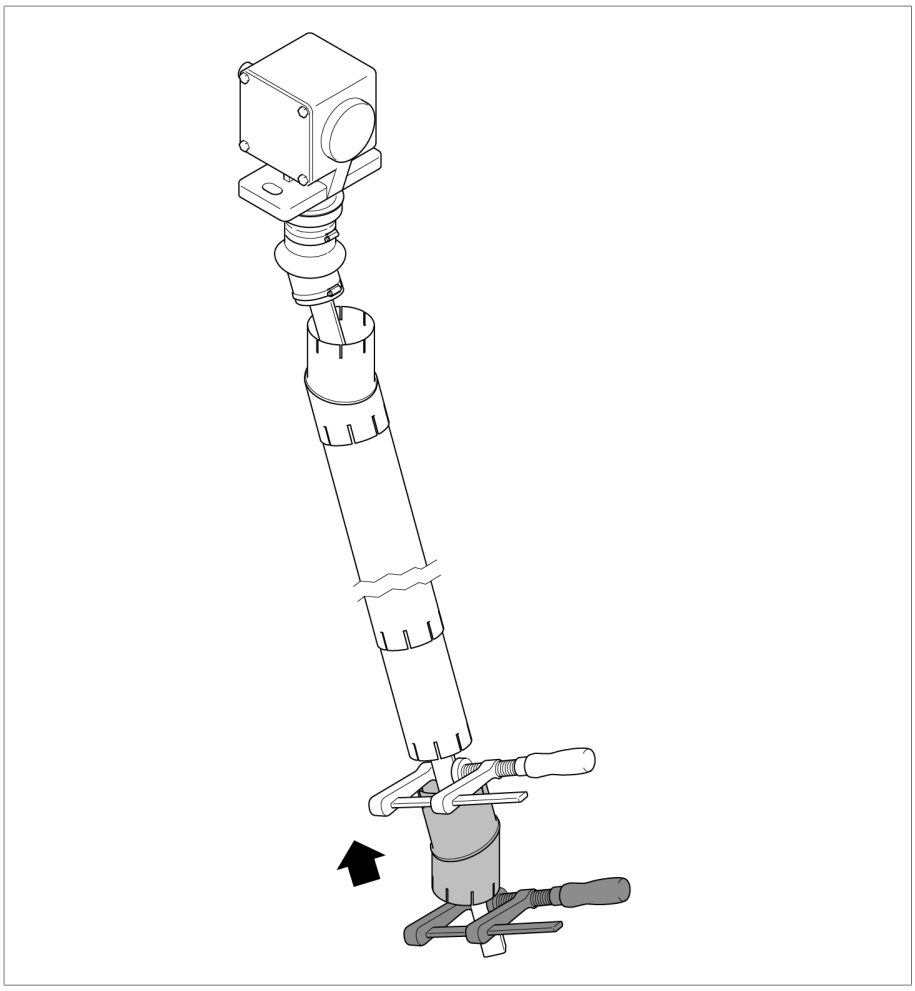

Figure 232: Sliding bottom flexible protective tube onto square tube

16. Swing in square tube and slide all the way down.

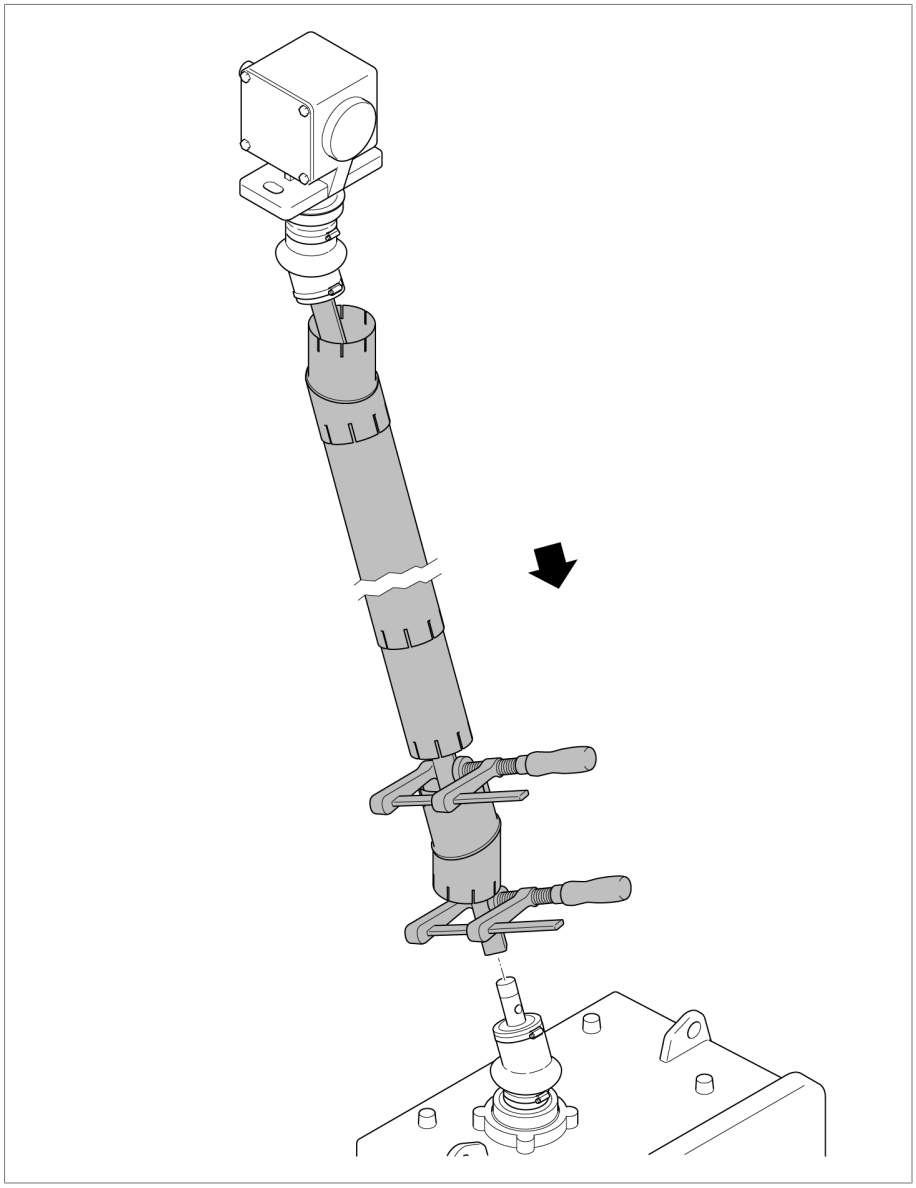

Figure 233: Swinging square tube in

17. Tighten bottom coupling brackets. Shaft end and coupling part must be securely connected such that no axial clearance remains between the coupling bolt and coupling bracket.

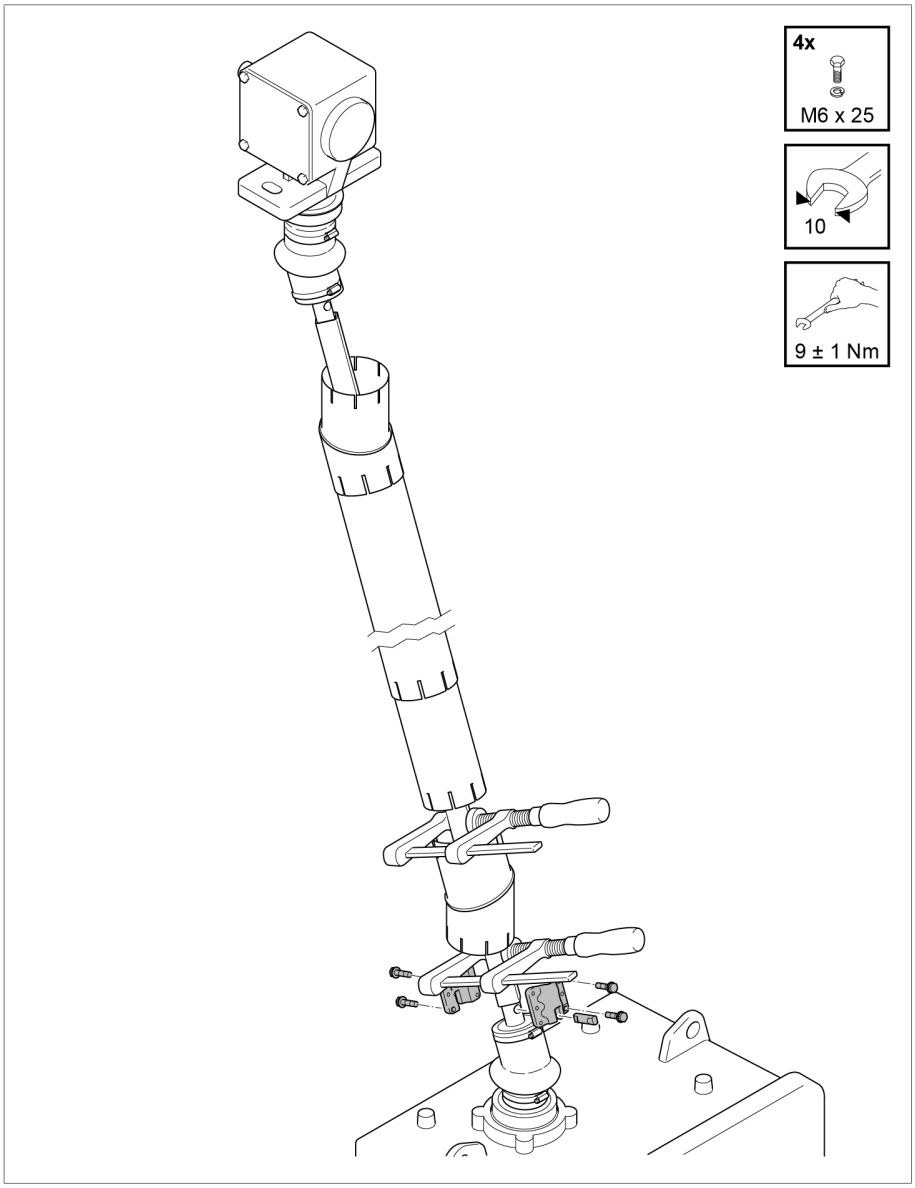

Figure 234: Tightening lower coupling brackets

18. Fit upper coupling brackets with 3 mm axial clearance.

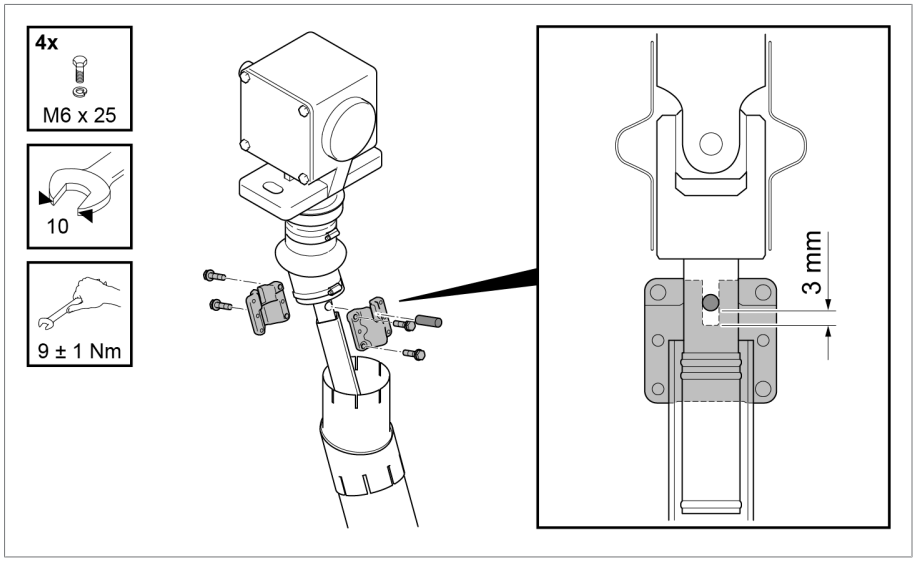

Figure 235: Fitting upper coupling brackets

19. Working from top to bottom, mount the individual parts of the shaft protection. Set angle position between both parts of pivotable protective tube and fix with available hose clip. Secure both upper and lower protective tubes with a hose clip at both ends. Secure the two telescopic protective tubes to one another using a hose clip.

The plastic adapters must be at the respective end of the pivotable protective tube. Only slide telescopic protective tube into upper and lower pivotable protective tubes by the width of the adapter before tightening the hose clips.

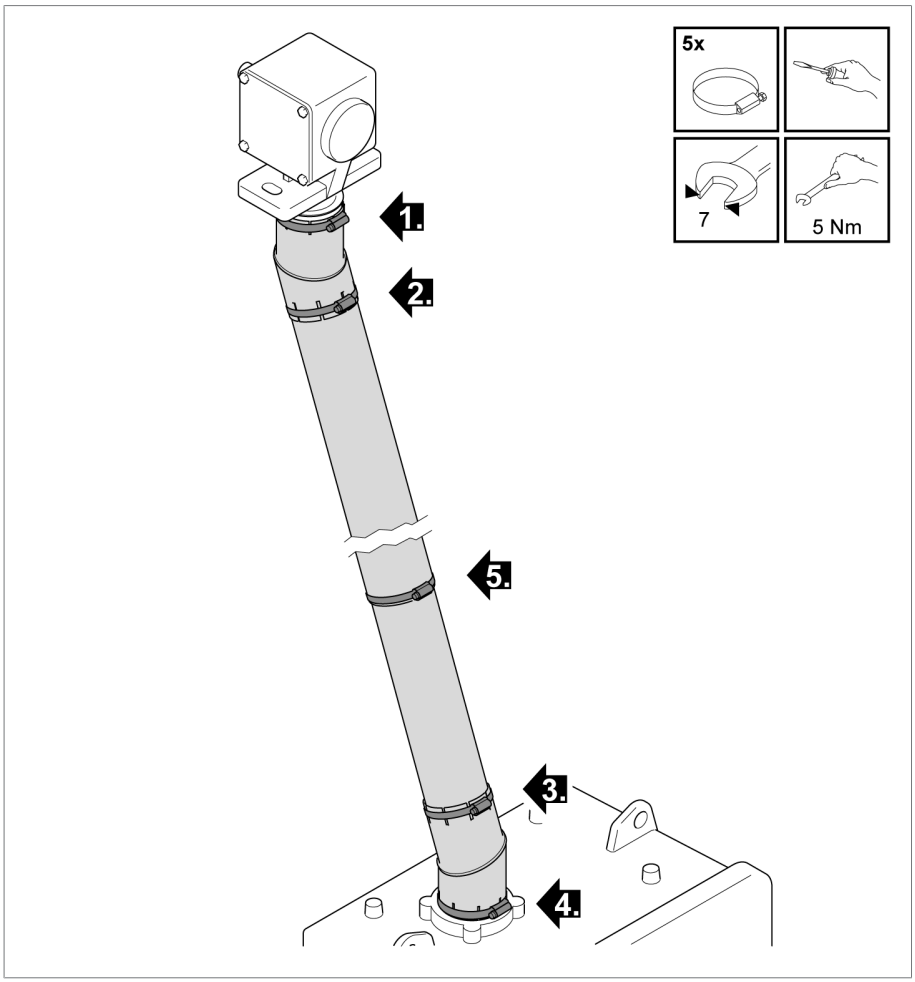

Figure 236: Securing telescopic protective tube and flexible protective tubes with hose clips

5.4.4.4 Fitting drive shaft with insulator

A model with insulator in the vertical drive shaft is available for insulating installation of the drive shaft.

Permitted axial displacement

Minor axial displacement of the vertical drive shaft with insulator is permitted as long as it does not exceed 35 mm per 1000 mm square tube length (that corresponds to 2°).

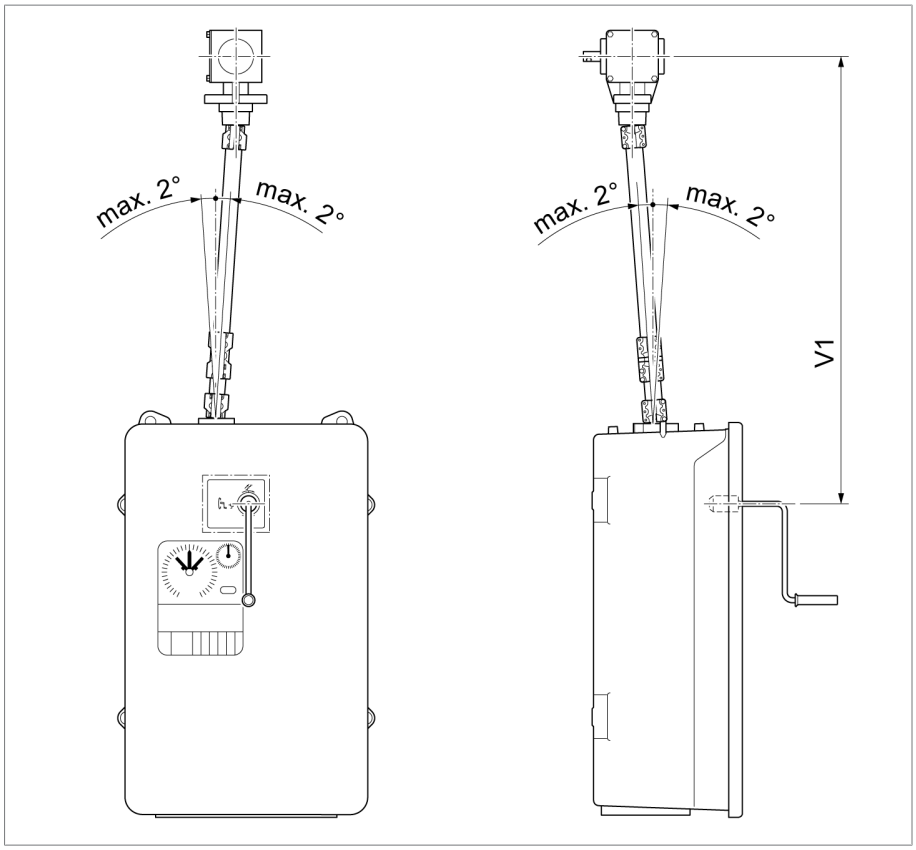

Figure 237: Permitted maximum axial displacement of vertical drive shaft with insulator

5.4.4.5 Fitting drive shaft with insulator and cardan joint

A model with insulator and cardan joint in the vertical drive shaft is also available for insulating installation of the drive shaft.

Permitted axial displacement

An axial displacement of 20° is permitted for a drive shaft with insulator and cardan joint.

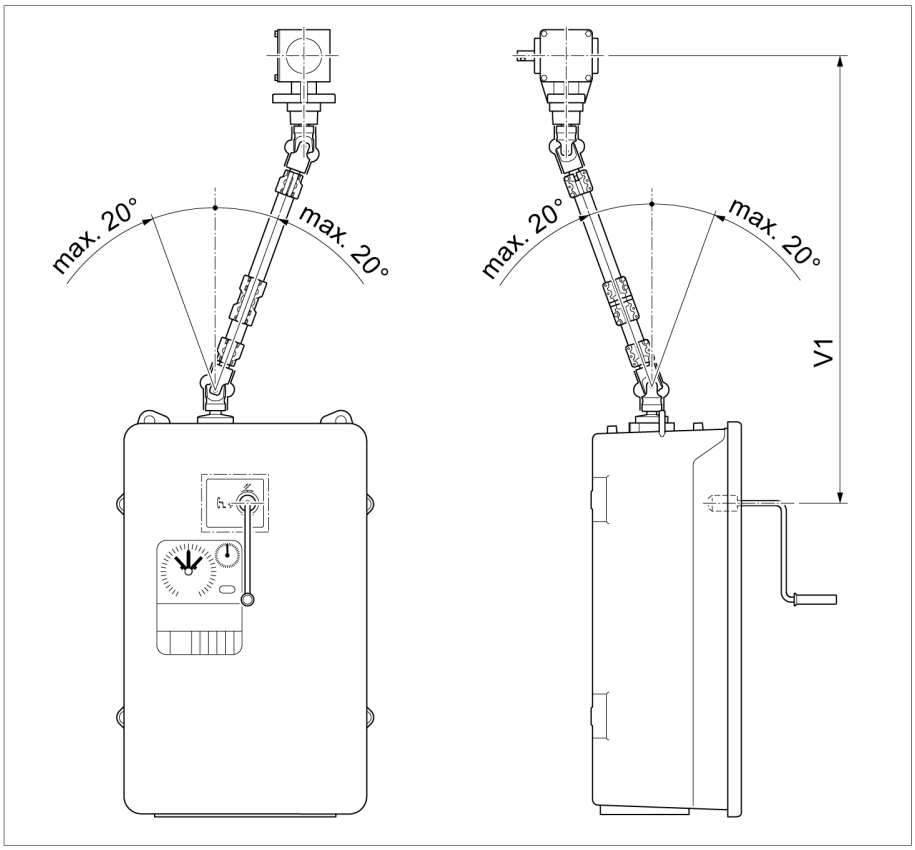

Figure 238: Permitted maximum axial displacement of vertical drive shaft with insulator and cardan joint

5.4.5 Centering on-load tap-changer and motor-drive unit

Center on-load tap-changer and motor-drive unit as described in relevant MR operating instructions for motor-drive unit.

5.4.6 Making the electrical connections for the motor-drive unit

Make electrical connections for the motor-drive unit as described in relevant MR operating instructions for motor-drive unit.

6 Commissioning

⚠ WARNING

Danger of explosion!

Explosive gases in the oil compartment of the on-load tap-changer, transformer, pipework system, oil conservator and at the dehydrating breather opening can deflagrate or explode and result in severe injury or death!

- ► Ensure that there are no ignition sources such as naked flame, hot surfaces or sparks (e.g. caused by the build-up of static charge) in the transformer's immediate surroundings during commissioning and that none occur.
- ► Do not operate any electrical devices (e.g. risk of sparks from impact wrench).
- ► Only use conductive and grounded hoses, pipes, and pump equipment that are approved for flammable liquids.

⚠ WARNING

Danger of explosion!

Overloading the on-load tap-changer can lead to explosion. Spraying hot insulating fluid and flying parts can lead to death and serious injuries. Property damage is highly probable.

- ► Ensure that the on-load tap-changer is not overloaded.
- ► Ensure use of the on-load tap-changer in accordance with section "Appropriate use".
- ► Prevent operations outside of the permitted operating conditions by taking suitable measures.

This chapter describes how to commission the on-load tap-changer.

6.1 Commissioning the on-load tap-changer at the transformer manufacturer's site

Perform the following work and functional checks before commissioning the transformer.

6.1.1 Bleeding on-load tap-changer head and suction pipe

Before commissioning, the on-load tap-changer head and the suction pipe on pipe connection S must be bled.

6.1.1.1 Bleeding on-load tap-changer head

1. Open all forward and return valves in the pipe system.

2. Remove screw cap on air-vent valve E1 on the on-load tap-changer head cover.

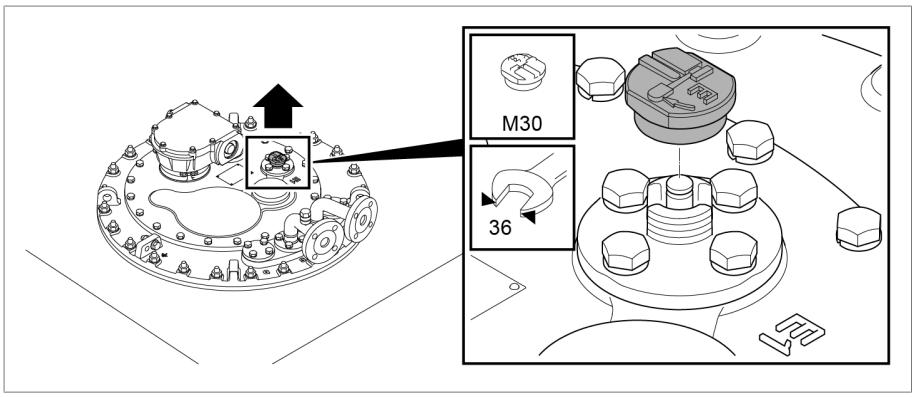

Figure 239: Air-vent valve E1

3. Use screwdriver to lift valve tappet on air-vent valve E1 and bleed on-load tap-changer head.

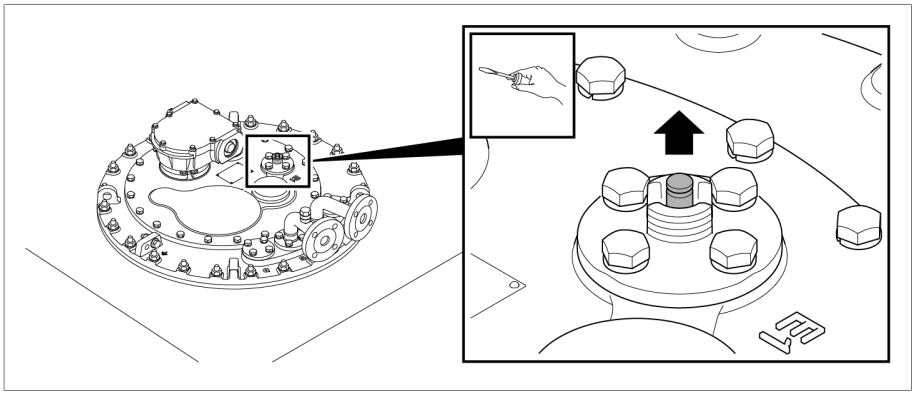

Figure 240: Valve tappet

4. Seal air-vent valve E1 with screw cap (tightening torque 10 Nm).

6.1.1.2 Bleeding suction pipe on pipe connection S

1. Remove screw cap from pipe connection S.

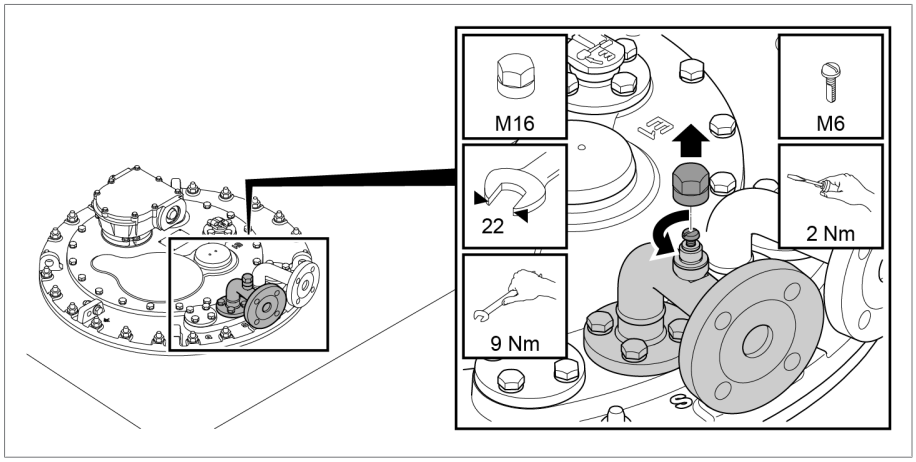

Figure 241: Pipe connection S

2. **NOTICE!** An incompletely bled suction pipe significantly impairs the insulation capability of the on-load tap changer to ground. Open vent screw and bleed suction pipe completely.
3. Close vent screw.
4. Seal vent screw with screw cap.

6.1.2 Grounding the on-load tap-changer

1. Connect grounding screw on the on-load tap-changer head to transformer cover. It is essential that CUPAL washers be placed directly on the connecting lug on both sides. The aluminum side of the CUPAL washers must be facing the connecting lug.

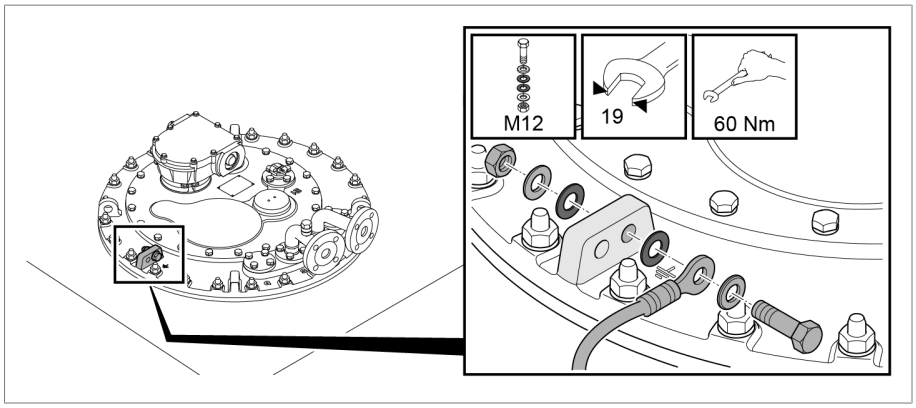

Figure 242: Grounding screw on on-load tap-changer head

2. Connect grounding screw of motor-drive protective housing to transformer tank. It is essential that a CUPAL washer be placed between the cable shoe and connecting lug. The aluminum side of the CUPAL washer must be facing the connecting lug.

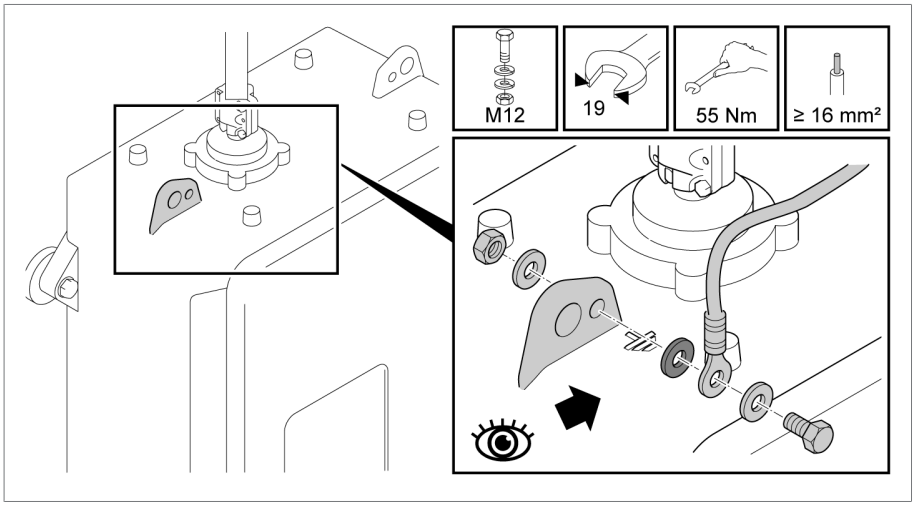

Figure 243: Grounding screw on motor-drive unit

3. When using a temperature sensor, connect housing of temperature sensor with grounding screw on the on-load tap-changer head or another grounding point on the transformer. It is essential that a CUPAL washer be placed between the cable shoe and temperature sensor housing. The aluminum side of the CUPAL washer must be facing the temperature sensor housing.

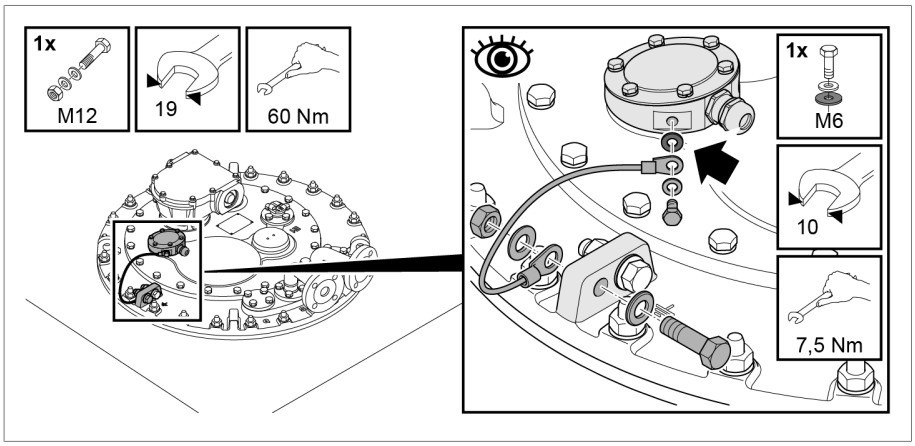

Figure 244: Temperature sensor

6.1.3 Checking motor-drive unit

NOTICE **Damage to the on-load tap-changer / de-energized tap-changer!**

Damage to the on-load tap-changer / de-energized tap-changer due to actuation of the on-load tap-changer / de-energized tap-changer without insulating fluid.

► Ensure that the selector / de-energized tap changer is fully immersed in insulating fluid and that the oil compartment of the on-load tap-changer is completely filled with insulating fluid.

Prior to commissioning the transformer, check whether the motor-drive unit and on-load tap-changer are correctly coupled and that the motor-drive unit functions correctly.

Tests on the motor-drive unit

1. Perform function checks as described in relevant MR operating instructions for motor-drive unit.
2. **NOTICE!** An incorrectly coupled motor-drive unit will lead to damage to the on-load tap-changer. Undertake trial tap-change operations across the entire range of settings. Ensure that in each operating position, the tap position indicators of motor-drive unit and on-load tap-changer (inspection window in the on-load tap-changer head) match.

Dielectric tests on transformer wiring

► Note information relating to dielectric tests on transformer wiring in relevant MR operating instructions for motor-drive unit.

6.1.4 High-voltage tests on the transformer

Note the following points before performing high-voltage tests on the transformer:

- Ensure that the oil compartment of the on-load tap-changer is completely filled with insulating fluid.
- Ensure that all protective devices for the on-load tap-changer are functioning correctly and are ready for use.
- Ensure that the ground connections on the motor-drive protective housing and protective housing fastening are free of paint.
- Only perform high voltage test if motor-drive unit door is closed.
- Disconnect external connections to electronic components in the motor-drive unit to prevent damage from overvoltage.
- When connecting the motor-drive unit's supply voltage, only use the cable bushings in the protective housing base intended for lead insertion.
- Guide all ground connecting leads to one central connection point (establishment of suitable reference earth).
- Disconnect all electronic components before the high voltage test. Before a dielectric test of the wiring, remove all devices with a withstand voltage of < 1000 V.

- Remove leads used for testing before the high voltage test as these function as antennas.
- Wherever possible, route the measurement leads and data leads separately to the energy cables.

Contact the manufacturer if you have any questions about possible sources of danger.

6.2 Transporting transformer to the operating site

NOTICE

Damage to motor-drive unit!

Damage to the motor-drive unit due to condensate in protective housing of motor-drive unit.

► Always keep protective housing of the motor-drive unit tightly closed.

► In the event of downtime lasting more than 8 weeks prior to initial commissioning, connect and operate the anti-condensation heater in the motor-drive unit. If this is not possible, place a sufficient amount of desiccant in the protective housing.

6.2.1 Transport with drive removed

If the drive must be removed in order to transport the transformer, proceed as follows:

1. Ensure that the drive and the on-load tap-changer are in the adjustment position.
2. Remove the drive.
3. Do not actuate the drive while the on-load tap-changer is uncoupled and do not turn the output shaft.
4. Do not actuate an on-load tap-changer which is uncoupled and do not turn its drive shaft.
5. Transport the drive to the installation site in the MR delivery packaging.
6. Fit drive [►Section 5.4.3, Page 162] and drive shaft [►Section 5.4.4, Page 162] to transformer at the installation site.

6.2.2 Transport with full transformer tank and without oil conservator

When storing or transporting the transformer with a full transformer tank but without an oil conservator, you must install a connecting lead between the interior of the oil compartment and the transformer tank's oil chamber for pressure compensation.

To do so, proceed as follows:

► Establish the connecting lead on the on-load tap-changer head between connections E2 and one of the free pipe connections R, S or Q.

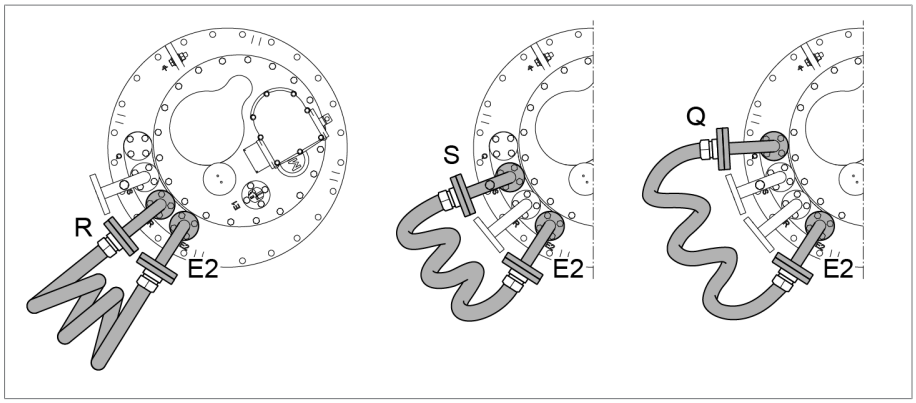

Figure 245: Connecting lead

In the event of a short-term immobilization time (maximum of 4 weeks) without an oil conservator, it is also sufficient to remove approximately 7 liters of insulating fluid from the on-load tap-changer oil compartment.

6.2.3 Transport with empty transformer tank

NOTICE

Damage to the on-load tap-changer!

The on-load tap-changer may be subject to oscillating movements during transformer transportation if the transformer is transported without insulating fluid and the on-load tap-changer oil compartment is transported with insulating fluid. These oscillating movements can lead to damage to the on-load tap-changer.

► Completely empty the oil compartment if the transformer is to be transported without insulating fluid.

► Preserve the oil compartment in the same way as the transformer (for example by filling with N2).

To empty the oil compartment, proceed as follows:

6.2.3.1 Emptying oil compartment via pipe connection S

1. De-energize all auxiliary circuits (e.g tap-change supervisory device, pressure relief device, pressure monitoring device).
2. With the stop-cock (slide valve) between oil conservator and oil compartment open, open air-vent valve E1 on the on-load tap-changer head.
3. Discharge the gas from under the on-load tap-changer cover. Ensure sufficient fresh air (e.g. in transformer cells and work tents) when doing so.

4. Once the gas has been discharged and the insulating fluid is flowing out of the air-vent valve, close the air-vent valve and close the stop-cock between the oil conservator and oil compartment.
5. Open air-vent valve again and drain off approximately 5–10 liters of insulating fluid via the pipe connection S until the area under the on-load tap-changer head cover is free of insulating fluid.
6. Loosen 24 screws M10 / wrench size 17 with locking elements on the on-load tap-changer head cover.
7. Remove on-load tap-changer head cover.
8. Extract insulating fluid via pipe connection S.
9. Open stop-cock between oil conservator and oil compartment.
   ⇨ Insulating fluid flows out of the oil conservator into the oil compartment.
10. Extract insulating fluid via pipe connection S.
11. Place on-load tap-changer head cover on the on-load tap-changer head.
12. Screw down on-load tap-changer head cover using 24 screws M10 / wrench size 17 and locking elements (tightening torque 34 Nm).

6.3 Commissioning transformer at operating site

Before energizing the transformer, check that the motor-drive unit and protective devices are functioning correctly and fill the on-load tap-changer oil compartment with fresh insulating fluid. To do so, proceed as follows:

6.3.1 Filling the oil compartment of the on-load tap-changer with insulating fluid

NOTICE **Damage to the on-load tap-changer!**

Unsuitable insulating fluids cause damage to the on-load tap-changer.

► Only use insulating fluids that meet the requirements in accordance with IEC 60296.

1. **NOTICE!** Check whether the on-load tap-changer head cover has a flange for attaching a pressure relief device. If it does, operation without a pressure relief device is not permitted and may result in damage to the on-load tap-changer.
   ⇨ Fit a pressure relief device which is approved for this on-load tap-changer on the on-load tap-changer head.

2. Establish a connecting lead between pipe connection E2 and one of the pipe connections R, S or Q to ensure equal pressure in the oil compartment and transformer during evacuation.

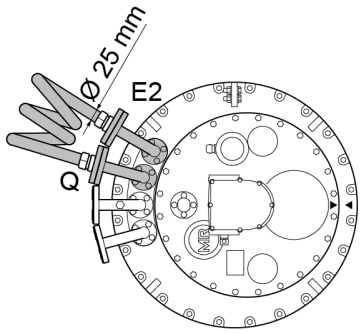

Figure 246: Connecting lead between E2 and Q

3. Fill on-load tap-changer with new insulating fluid using one of the two free pipe connections of the on-load tap-changer head.

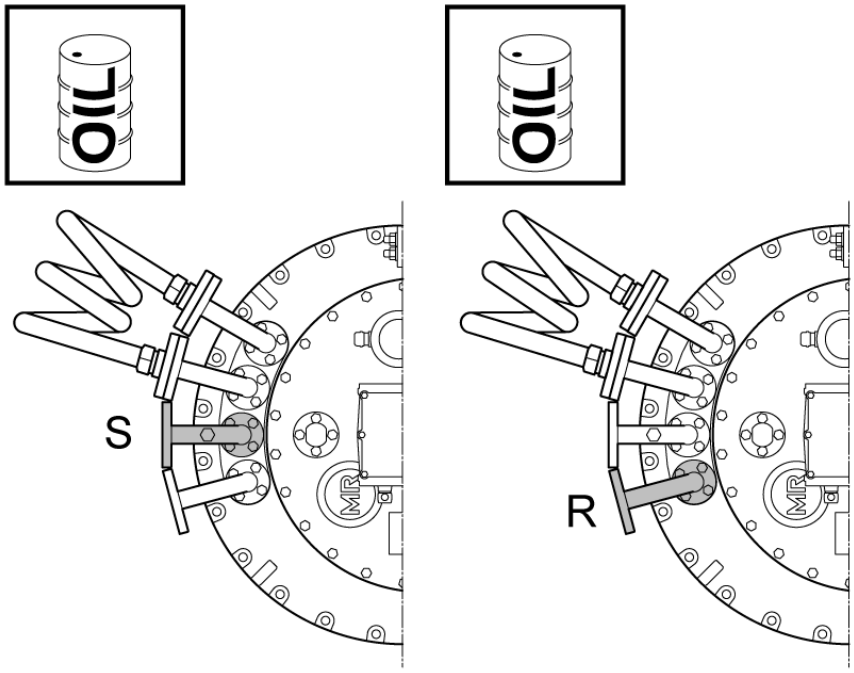

Figure 247: Pipe connections S and R

4. Take a sample of insulating fluid from the oil compartment.
5. Record the temperature of the sample immediately after the sample is taken.
6. Determine dielectric strength and water content at an insulating fluid temperature of 20 °C ± 5 °C. The dielectric strength and water content must comply with the limit values specified in the technical data.

6.3.2 Bleeding on-load tap-changer head and suction pipe

Before commissioning, the on-load tap-changer head and the suction pipe on pipe connection S must be bled.

6.3.2.1 Bleeding on-load tap-changer head

1. Open all forward and return valves in the pipe system.
2. Remove screw cap on air-vent valve E1 on the on-load tap-changer head cover.

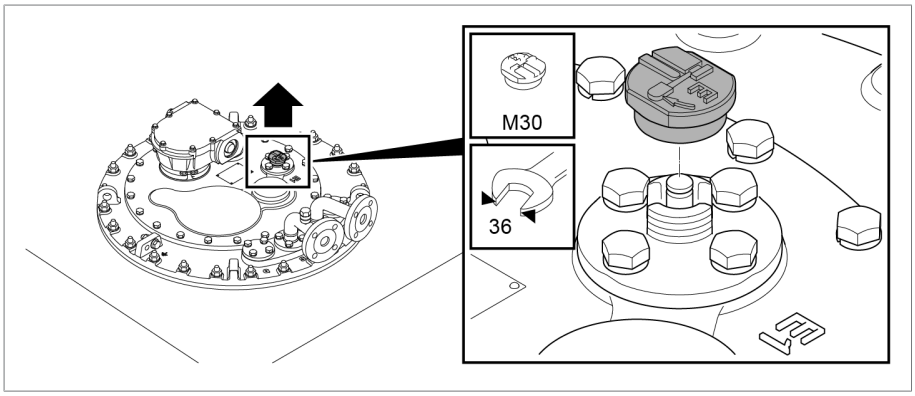

Figure 248: Air-vent valve E1

3. Use screwdriver to lift valve tappet on air-vent valve E1 and bleed on-load tap-changer head.

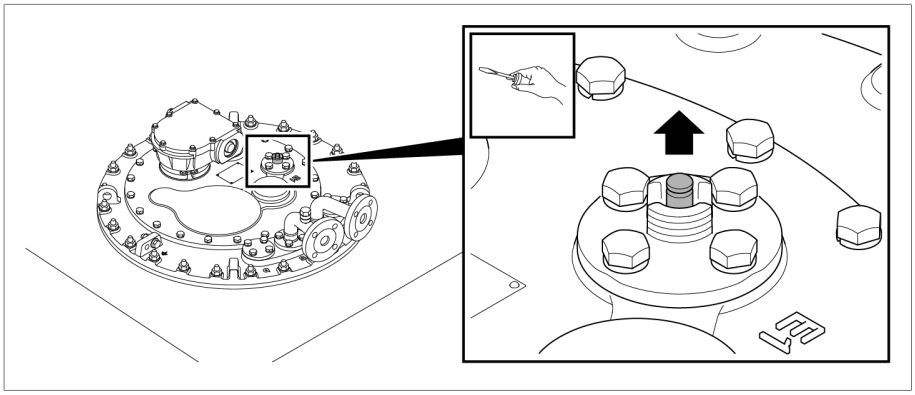

Figure 249: Valve tappet

4. Seal air-vent valve E1 with screw cap (tightening torque 10 Nm).

6.3.2.2 Bleeding suction pipe on pipe connection S

1. Remove screw cap from pipe connection S.

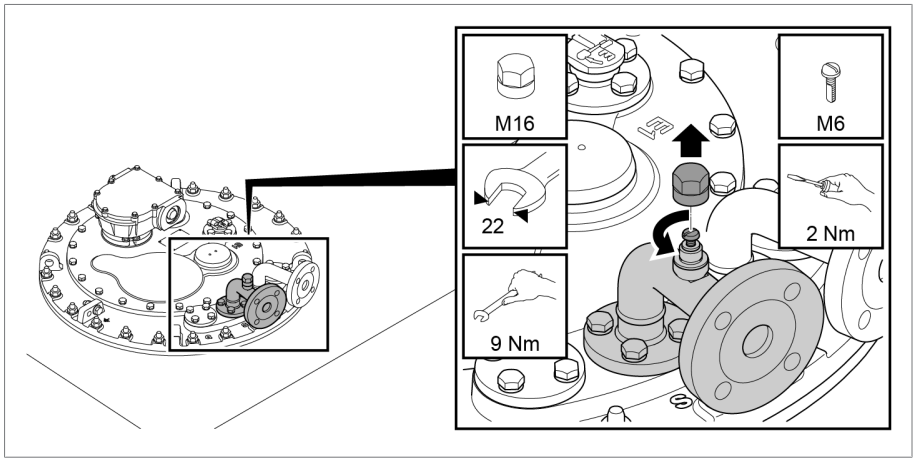

Figure 250: Pipe connection S

2. **NOTICE!** An incompletely bled suction pipe significantly impairs the insulation capability of the on-load tap changer to ground. Open vent screw and bleed suction pipe completely.
3. Close vent screw.
4. Seal vent screw with screw cap.

6.3.3 Checking motor-drive unit

NOTICE

Damage to the on-load tap-changer / de-energized tap-changer!

Damage to the on-load tap-changer / de-energized tap-changer due to actuation of the on-load tap-changer / de-energized tap-changer without insulating fluid.

► Ensure that the selector / de-energized tap changer is fully immersed in insulating fluid and that the oil compartment of the on-load tap-changer is completely filled with insulating fluid.

NOTICE

Damage to the on-load tap-changer and motor-drive unit!

Damage to on-load tap-changer and motor-drive unit due to incorrect use of position transmitter equipment.

- ► Only circuits stated in the chapter Technical data for position transmitter equipment may be connected to the position transmitter module connections.
- ► The switchover point of the position transmitter equipment in the motor-drive unit is not the same as the switchover point of the diverter switch operation. This depends on the type of diverter switch. This fact should be noted when project planning the locking circuits between the motor-drive unit and external equipment (e.g. transformer circuit breaker).
- ► Therefore, the "Tap changer in operation" position transit contact shown in the connection diagram should be used for external monitoring, locking and control purposes instead of the position transmitter equipment.

Prior to commissioning the transformer, check whether the motor-drive unit and on-load tap-changer are correctly coupled and that the motor-drive unit functions correctly.

Tests on the motor-drive unit

1. Perform function checks as described in relevant MR operating instructions for motor-drive unit.
2. **NOTICE!** An incorrectly coupled motor-drive unit will lead to damage to the on-load tap-changer. Undertake trial tap-change operations across the entire range of settings. Ensure that in each operating position, the tap position indicators of motor-drive unit and on-load tap-changer (inspection window in the on-load tap-changer head) match.

Dielectric tests on transformer wiring

- ► Note information relating to dielectric tests on transformer wiring in relevant MR operating instructions for motor-drive unit.

6.3.4 Checking protective relay

6.3.4.1 Checking protective relay (RS 2001, 2001/V, 2001/H, 2001/E, 2001/5, 2001/R, 2001/T, 2003)

✓ Check that the protective relay is functioning correctly before commissioning the transformer:

1. Ground the transformer on the high-voltage side and low-voltage side. Ensure that the grounding for work connection on the transformer is not removed during testing.
2. Ensure that the transformer remains de-energized during testing.
3. Deactivate the automatic fire extinguishing device.

4. Loosen the three screws on the terminal box cover and lift off the terminal box cover.
5. Remove the slotted head screw for potential tie-in and remove the terminal box cover with wire.
6. Press OFF test button.
7. Leave the transformer's danger zone.
8. Ensure that the transformer's circuit breaker cannot be closed.

   ⇨ Passive protection test
9. Press OPERATION test button.
10. Leave the transformer's danger zone.
11. Close the transformer's circuit breaker with isolating switches open and the transformer grounded on all sides.
12. Press OFF test button.
13. Ensure that the transformer's circuit breaker is open.

    ⇨ Active protection test.
14. Press OPERATION test button to reset the protective relay.
15. Position the wire for the terminal box cover and affix using the slotted head screw.
16. Attach the terminal box cover and secure with screws.

6.3.4.2 Checking protective relay (RS 2004)

✓ Check that the protective relay is functioning correctly before commissioning the transformer:

1. Ensure that the flap valve is in the OPERATION position.
2. Leave the transformer's danger zone.
3. Close the transformer's circuit breaker with isolating switches open and the transformer grounded on all sides.
4. Press OFF test button.
5. Ensure that the transformer's circuit breaker is open.

   ⇨ Active protection test

6.3.5 Checking pressure monitoring device

✓ Check that the pressure monitoring device functions correctly before commissioning the transformer:

1. Ground the transformer on the high-voltage side and low-voltage side. Ensure that the working ground connection on the transformer is not removed during testing.
2. Ensure that the transformer remains de-energized during testing.
3. Deactivate the automatic fire extinguishing device.
4. Remove the cover cap.

5. Activate the sensor on the snap-action switch.
   ⇨ Sensor is in the OFF position.
6. Leave the transformer's danger zone.
7. Ensure that the transformer's circuit breaker cannot be closed.
   ⇨ Passive protection test
8. Activate the sensor on the snap-action switch.
   ⇨ Sensor is in the OPERATION position.
9. Leave the transformer's danger zone.
10. Close the transformer's circuit breaker with isolating switches open and the transformer grounded on all sides.
11. Activate the sensor on the snap-action switch.
    ⇨ Sensor is in the OFF position.
12. Ensure that the transformer's circuit breaker is open.
    ⇨ Active protection test.
13. Activate the sensor on the snap-action switch to reset the pressure monitoring device.
    ⇨ Sensor is in the OPERATION position.
14. Secure the cover cap.

6.3.6 Commissioning the transformer

✓ The signaling contact for falling below the minimum insulating fluid fill level in the on-load tap-changer's oil conservator is looped into the tripping circuit of the circuit breaker.

✓ The protective relay and additional protective devices are looped into the circuit breaker's tripping circuit.

✓ The motor-drive unit and all protective devices are functioning correctly and are ready for use.

✓ The oil compartment of the on-load tap-changer is completely filled with insulation fluid.

✓ All stop-cocks between on-load tap-changer and oil conservator of the on-load tap-changer are open.

1. Switch on transformer.
2. **NOTICE!** Inrush current impulses can be significantly greater than the transformer rated current and may lead to current paths with asymmetrical or non-sinusoidal curve shapes and, as a result, overload the on-load tap-changer during the diverter switch operation. Only perform tap-change operations - whether under no load or under load conditions - once the inrush current impulse has subsided.

7 Fault elimination

⚠ WARNING

Danger of explosion!

Explosive gases under the on-load tap-changer head cover can deflagrate or explode and result in severe injury or death.

- ► Ensure that there are no ignition sources such as open flames, hot surfaces or sparks (e.g. caused by the build-up of static charge) in the immediate surroundings and that none occur.
- ► De-energize all auxiliary circuits (for example tap-change supervisory device, pressure relief device, pressure monitoring device) before removing the on-load tap-changer head cover.
- ► Do not operate any electrical devices during the work (e.g. risk of sparks from impact wrench).

NOTICE

Damage to the on-load tap-changer and transformer!

If the protective relay or other protective devices trip, this can indicate damage to the on-load tap-changer and transformer. The transformer must not be energized without being inspected first.

- ► Check on-load tap-changer and transformer when protective relay or other protective devices have been tripped.
- ► Do not use the equipment again until you are sure there is no damage to the on-load tap-changer or transformer.

NOTICE

Damage to motor-drive unit!

Damage to the motor-drive unit due to condensate in protective housing of motor-drive unit.

- ► Always keep protective housing of the motor-drive unit tightly closed.
- ► In the event of operation interruptions of more than 2 weeks, connect and operate the anti-condensation heater in the motor-drive unit. If this is not possible, e.g. during transportation, place a sufficient amount of desiccant in the protective housing.

The table below is intended to assist with detecting and, where possible, remedying faults.

For more information, please consult the operating instructions for the RS protective relay or the relevant protective device.

In the event of faults on the on-load tap-changer or motor-drive unit which cannot be easily corrected on site, or if the RS protective relay or additional protective devices have been tripped, please inform your authorized MR representative, the transformer manufacturer or contact us directly at:

Maschinenfabrik Reinhausen GmbH
Technical Service
Postfach 12 03 60
93025 Regensburg

Germany
Phone: +49 94140 90-0
Fax: +49 9 41 40 90-7001
E-mail: service@reinhausen.com
Internet: www.reinhausen.com

Fault description	Action
Tripping of protective relay (e.g. RS)	See "Tripping the protective relay and re-commissioning the transformer" Also contact MR.
Tripping of pressure relief device (e.g. MPreC®)	On-load tap-changer and transformer must be checked. Depending on the cause of tripping, take measurements / carry out checks on the transformer. Contact MR to check the on-load tap-changer.
Tripping of pressure monitoring device (e.g. DW 2000)	See "Tripping the pressure monitoring device and putting the transformer back into operation" Also contact MR.
Activation of tap-change supervisory device	The motor-drive unit can no longer be electrically actuated once the tap-change supervisory device has been activated. Manual operation of the motor-drive unit via the hand crank when the transformer is switched on is prohibited. On-load tap-changer and transformer must be checked. Depending on the cause of tripping, take measurements / carry out checks on the transformer. Contact MR to check the on-load tap-changer.
Activation of rupture disk in on-load tap-changer head cover	On-load tap-changer and transformer must be checked. Depending on the cause of tripping, take measurements / carry out checks on the transformer. Contact MR to check the on-load tap-changer.
Tripping of motor protective switch in motor-drive unit	See chapter "Fault elimination" in the operating instructions of the TAPMOTION® ED motor-drive unit
Tripping of signaling contact that indicates that the fill level of the insulating fluid has fallen below the minimum in the on-load tap-changer oil conservator	Check pipe system (pipes etc.) and on-load tap-changer head for leaks. Check the fill level and the quality of the insulating fluid in the oil compartment in accordance with the operating instructions for the on-load tap-changer. If the fill level has fallen below the limit values, also contact MR.
On-load tap-changer not changing tap position (sluggishness, Raise keys / Lower keys not working, no audible diverter switch action)	Contact MR.
No change in voltage on transformer despite change in position on motor-drive unit	Contact MR.
Tap position indicator on motor-drive unit and on-load tap-changer different	Contact MR.
Noises on drive shaft or motor-drive unit when changing tap position	Ensure proper mounting of the drive shaft in accordance with its operating instructions. Check that hose clips and protective covers are seated correctly. Contact MR in the event of noise from the motor-drive unit.

Fault description	Action
Red message on monitoring unit	If possible read out database and send to MR along with error code.
Warning or tripping of Buchholz relay on transformer	Notify manufacturer of transformer.
Deviation from desired value when measuring winding resistance of transformer	Contact manufacturer of transformer and, if necessary, MR, and provide measured values.
Deviation from desired value during dissolved gas analysis (transformer oil)	Contact manufacturer of transformer and, if necessary, MR, and provide measured values.
Deviation from desired value during transformer ratio test	Contact manufacturer of transformer and, if necessary, MR, and provide measured values.
Deviation from limit value for insulating fluids	Carry out insulating fluid change, check oil conservator breather of on-load tap-changer.

Table 7: Fault elimination

7.1 Tripping the protective relay and re-commissioning the transformer

⚠ WARNING

Danger of explosion!

Explosive gases in the protective relay can deflagrate or explode and result in severe injury or death.

- ► Wait 15 minutes after switching off the transformer before beginning further work on the protective relay so that the gases can dissipate.
- ► Ensure that there are no ignition sources such as naked flames, hot surfaces or sparks (e.g. caused by the build-up of static charge) in the immediate surroundings and that none occur.
- ► De-energize all auxiliary circuits before beginning work.
- ► Do not operate any electrical devices during the work (e.g. risk of sparks from impact wrench).

⚠ WARNING

Danger of death or severe injury!

Danger of severe injury or death if on-load tap-changer and transformer are insufficiently tested.

- ► Be sure to contact Maschinenfabrik Reinhausen to check on-load tap-changer and transformer if the protective relay has tripped.
- ► Only use the equipment again when you are sure there is no damage to the on-load tap-changer or transformer.

When the circuit breakers have been tripped by the protective relay, proceed as follows:

1. Establish time of tripping.
2. Determine operating position of on-load tap-changer.
3. As a precaution, block the motor-drive unit by tripping the motor protective switch to prevent the on-load tap-changer from being actuated by remote control.

4. Check the on-load tap-changer head cover. If insulating fluid is leaking, close the oil conservator stop valve immediately.
5. Check whether the flap valve of the protective relay is in the OFF or OPERATION position.

7.1.1 Flap valve in OPERATION position

If the flap valve is in the OPERATION position, there may be a fault in the tripping circuit. Check the tripping circuit in this case. If you are not able to clarify why the protective relay tripped, be sure to contact Maschinenfabrik Reinhausen to check the on-load tap-changer.

7.1.2 Flap valve in OFF position

Note that protective relay RS 2004 features an automatic reset mechanism which means that the flap valve does not remain in the OFF position after tripping. If the protective relay RS 2004 has not tripped due to an error in the tripping circuit, also proceed as described below for RS 2004.

If the flap valve is in the OFF position, proceed as follows:

1. Ensure that the transformer is not started up under any circumstances.
2. Contact and inform Maschinenfabrik Reinhausen of the following:
   - ⇨ Serial number of protective relay and on-load tap-changer
   - ⇨ What was the load of the transformer at the instant of tripping?
   - ⇨ Was the on-load tap-changer moved immediately before or during tripping?
   - ⇨ Did any other protective devices of the transformer respond at the instant of tripping?
   - ⇨ Were switching operations in the network being carried out at the instant of tripping?
   - ⇨ Were overvoltages registered at the instant of tripping?
3. Take further action in agreement with Maschinenfabrik Reinhausen.

7.1.3 Re-commissioning the transformer

Once the reason for the protective relay tripping has been established and remedied, you can re-commission the transformer:

1. Check the protective relay [▶Section 6.3.4.1, Page 218].
2. Commission the transformer.

7.2 Tripping the pressure monitoring device and putting the transformer back into operation

⚠ WARNING

Danger of death or severe injury!

Danger of severe injury or death if on-load tap-changer and transformer are insufficiently tested.

- ► Be sure to contact Maschinenfabrik Reinhausen to check on-load tap-changer and transformer after the pressure monitoring device has been tripped.
- ► Only use the equipment again when you are sure there is no damage to the on-load tap-changer or transformer.

If the circuit breaker is tripped by the pressure monitoring device, proceed as follows:

1. Establish time of tripping.
2. Determine operating position of on-load tap-changer.
3. As a precaution, block the motor-drive unit by tripping the motor protective switch to prevent the on-load tap-changer from being actuated by remote control.
4. Check the on-load tap-changer head cover. If insulating fluid is leaking, close the oil conservator stop valve immediately.
5. Check whether the pressure monitoring device sensor is in the OFF position or OPERATION position.

7.2.1 Sensor in the OPERATION position

If the sensor is in the OPERATION position, there may be an error in the tripping circuit. Check the tripping circuit in this case. If you are not able to clarify why the pressure monitoring device tripped, be sure to contact Maschinenfabrik Reinhausen to check the on-load tap-changer.

7.2.2 Sensor in the OFF position

Proceed as follows if the sensor is in the OFF position.

1. Ensure that the transformer is not started up under any circumstances.

2. Contact and inform Maschinenfabrik Reinhausen of the following:
   - ⇨ What was the load of the transformer at the instant of tripping?
   - ⇨ Was there a tap-change operation on the on-load tap-changer immediately before or during the tripping?
   - ⇨ Did any other protective devices of the transformer respond at the instant of tripping?
   - ⇨ Were switching operations in the network being carried out at the instant of tripping?
   - ⇨ Were overvoltages registered at the instant of tripping?
   - ⇨ How high is the static pressure on the pressure relief device (height difference between the oil level in the on-load tap-changer oil conservator and the pressure relief device)?
3. Take further action in agreement with Maschinenfabrik Reinhausen.

7.2.3 Re-commissioning the transformer

You can re-commission the transformer once the cause for tripping the pressure monitoring device has been determined and resolved:

1. Ensure that the sensor on the snap-action switch is in the OPERATION position.
2. Commission the transformer.

8 Technical data

An overview of all key technical data for the on-load tap-changer and motor-drive unit exists in the form of separate documents, which are available on request.

8.1 Technical data for on-load tap-changer

8.1.1 On-load tap-changer properties

Electrical data for OILTAP® V: V III 200 Y, V III 200 D, V III 250 Y, V III 250 D, V III 350 Y, V III 350 D, V I 350

	V III 200 Y	V III 200 D	V III 250 Y	V III 250 D	V III 350 Y	V III 350 D	V I 350
Max. rated through-current I_{um} [A]	200		200		350		
Rated short-time current [kA]	4		4		5		
Rated duration of short-circuits [s]	3		3		3		
Rated peak withstand current [kA]	10		10		12.5		
Max. rated step voltage U_{im} [V][1)]	1500 (10-pitch) 1200…1400 (12-pitch) 1000 (14-pitch)		1500 (10-pitch) 1200…1400 (12-pitch) 1000 (14-pitch)		1500 (10-pitch) 1200…1400 (12-pitch) 1000 (14-pitch)		
Step capacity (P_{StN}) [kVA]	300 (10-pitch) 280 (12-pitch) 200 (14-pitch)		300 (10-pitch) 280 (12-pitch) 200 (14-pitch)		525 (10-pitch) 420 (12-pitch) 350 (14-pitch)		
Rated frequency [Hz]	50…60		50…60		50…60		

Table 8: Electrical data for OILTAP® V

[1)] The maximum rated step voltage may be exceeded by 10% due to overexcitation of the transformer if the step capacity is limited to its rated value.

Electrical data for OILTAP® V: V III 400 Y, V III 400 D, V III 500 Y, V III 500 D

	V III 400 Y	V III 400 D	V III 500 Y	V III 500 D
Max. rated through-current I_{um} [A]	350		500	
Rated short-time current [kA]	5		7	
Rated duration of short-circuits [s]	3		3	
Rated peak withstand current [kA]	12.5		17.5	
Max. rated step voltage U_{im} [V][1)]	1500 (10-pitch) 1200…1400 (12-pitch) 1000 (14-pitch)		1500 (10-pitch) 1400 (12-pitch)	

	V III 400 Y	V III 400 D	V III 500 Y	V III 500 D
Step capacity (P_{StN}) [kVA]	525 (10-pitch) 420 (12-pitch) 350 (14-pitch)		400[2)]…525[2)] (10-pitch) 325[2)]…420[2)] (12-pitch)	
Rated frequency [Hz]	50…60		50…60	

Table 9: Electrical data for OILTAP® V

[1)] The maximum rated step voltage may be exceeded by 10% due to overexcitation of the transformer if the step capacity is limited to its rated value.

[2)] Increasing operation at the maximum rated through-current with reduced through-current: 10-pitch up to 525 kVA, 12-pitch up to 420 kVA

Mechanical data for OILTAP® V: V III 200 Y, V III 200 D, V III 250 Y, V III 250 D, V III 350 Y, V III 350 D, V I 350

	V III 200 Y		V III 200 D		V III 250 Y		V III 250 D		V III 350 Y		V III 350 D		V I 350	
Number of operating positions	Without change-over selector: max. 14 With change-over selector: max. 27													
Dimensions	See dimensional drawings													
Weight without insulating fluid in kg (approx.)	130		140		130		140		140		150		120	
Displacement in dm^3 (without change-over selector)	125		165		125		165		140		185		85	
Displacement in dm^3 (with change-over selector)	155		200		155		200		170		220		115	
Insulating fluid fill volume V_S and minimum volume ΔV[1)] of the oil conservator in dm^3 (without change-over selector)	**V_S**	**ΔV**	**V_S**	**ΔV**	**V_S**	**ΔV**	**V_S**	**ΔV**	**V_S**	**ΔV**	**V_S**	**ΔV**	**V_S**	**ΔV**
	100	14	145	19	100	14	145	19	110	15	165	21	68	10
Insulating fluid fill volume V_S and minimum volume ΔV[1)] of the oil conservator in dm^3 (with change-over selector)	**V_S**	**ΔV**	**V_S**	**ΔV**	**V_S**	**ΔV**	**V_S**	**ΔV**	**V_S**	**ΔV**	**V_S**	**ΔV**	**V_S**	**ΔV**
	125	16	165	20	125	16	165	20	135	18	180	22	85	12

Table 10: Mechanical data for OILTAP® V

[1)] Applies to insulating fluid temperature ϑ = -30 °C…+100 °C

Mechanical data for OILTAP® V: V III 400 Y, V III 400 D, V III 500 Y, V III 500 D

	V III 400 Y		V III 400 D		V III 500 Y		V III 500 D	
Number of operating positions	Without change-over selector: max. 14 With change-over selector: max. 27							
Dimensions	See dimensional drawings							
Weight without insulating fluid in kg (approx.)	140		150		190		200	
Displacement in dm^3 (without change-over selector)	140		185		205		240	
Displacement in dm^3 (with change-over selector)	170		220		235		275	
Insulating fluid fill volume V_S and minimum volume ΔV[1] of the oil conservator in dm^3 (without change-over selector)	**V_S**	**ΔV**	**V_S**	**ΔV**	**V_S**	**ΔV**	**V_S**	**ΔV**
	110	15	165	21	160	20	200	24
Insulating fluid fill volume V_S and minimum volume ΔV[1] of the oil conservator in dm^3 (with change-over selector)	**V_S**	**ΔV**	**V_S**	**ΔV**	**V_S**	**ΔV**	**V_S**	**ΔV**
	135	18	180	22	185	22	225	26

Table 11: Mechanical data for OILTAP® V

[1] Applies to insulating fluid temperature ϑ = -30 °C…+100 °C

8.1.2 Permissible ambient conditions

Air temperature during operation	- 25 °C…+ 50 °C
Temperature of the insulating fluid in operation	- 25 °C…+ 105 °C (up to + 115 °C when the transformer is in emergency operation)
Transport temperature, storage temperature	- 40 °C…+ 50 °C
Drying temperatures	See installation and commissioning instructions, chapter "Assembly"
Compressive strength	See technical data TD 61 – General Section
Installation height of the oil conservator	See technical data TD 61 – General Section
Installation height above sea level	See technical data TD 61 – General Section

Table 12: Permissible ambient conditions

8.2 Technical data for protective relay

The technical data for the protective relay RS 2001 is listed in the following. In accordance with DIN EN 60255-1, operational accuracy = base accuracy

Housing	Outdoor model
Degree of protection	IP55
Relay actuation	Flap valve with aperture

Weight	approx. 3.5 kg
Oil flow speed of available types when tripping (oil temperature 20°C)	0.65 ± 0.15 m/s 1.20 ± 0.20 m/s 3.00 ± 0.30 m/s 4.80 ± 0.30 m/s

Table 13: General technical data

Tripping circuit

The protective relay can be supplied with either a normally open (NO) or a normally closed (NC) dry-reed magnetic switch (see dimensional drawing supplied). Other contact combinations are available as a special version.

Electrical data for normally closed (NC) dry-reed magnetic switch

Electrical data	
DC switching capacity	1.2 W…200 W
AC switching capacity (50 Hz)	1.2 VA…400 VA
Switching voltage AC/DC	24 V…250 V
Switched current AC/DC	4.8 mA…2 A

Table 14: Electrical data

Switching capacity (switching load on an off)	
Minimum switched current AC/DC (lowest voltage)	50 mA (at 24 V)
Minimum switched current AC/DC (highest voltage)	4.8 mA (at 250 V)
Maximum switched current DC (highest current)	1.6 A (at 125 V with L/R = 40 ms)
Maximum switched current DC (highest voltage)	0.9 A (at 250 V with L/R = 40 ms)
Maximum switched current AC (highest current)	2 A (at 125 V with cos φ = 0.6)
Maximum switched current AC (highest voltage)	1.6 A (at 250 V with cos φ = 0.6)
Switching operations	1,000 cycles

Table 15: Switching capacity (switching load on an off)

Dielectric strength	
AC dielectric strength between all voltage-carrying connections and the grounded parts	2,500 V, 50 Hz, test duration 1 minute
AC dielectric strength between the opened contacts	2,000 V, 50 Hz, test duration 1 minute

Table 16: Dielectric strength

Electrical data for normally open (NO) dry-reed magnetic switch

Electrical data	
DC switching capacity	1.2 W…250 W
AC switching capacity (50 Hz)	1.2 VA…400 VA
Switching voltage AC/DC	24 V…250 V
Switched current AC/DC	4.8 mA…2 A

Table 17: Electrical data

Switching capacity (switching load on an off)	
Minimum switched current AC/DC (lowest voltage)	50 mA (at 24 V)
Minimum switched current AC/DC (highest voltage)	4.8 mA (at 250 V)
Maximum switched current DC (highest current)	2 A (at 125 V with L/R = 40 ms)
Maximum switched current DC (highest voltage)	1 A (at 250 V with L/R = 40 ms)
Maximum switched current AC (highest current)	2 A (at 125 V with cos φ = 0.6)
Maximum switched current AC (highest voltage)	1.6 A (at 250 V with cos φ = 0.6)
Switching operations	1,000 cycles

Table 18: Switching capacity (switching load on an off)

Dielectric strength	
AC dielectric strength between all voltage-carrying connections and the grounded parts	2,500 V, 50 Hz, test duration 1 minute
AC dielectric strength between the opened contacts	2,000 V, 50 Hz, test duration 1 minute

Table 19: **Dielectric strength**

Ambient conditions

Ambient temperature Ta	-40°C…+50°C
Oil temperature	<130 °C
Air pressure	Corresponds to 0 m…4,000 m above sea level

Table 20: Ambient conditions

8.3 Special models of protective relay

8.3.1 Protective relay with CO change-over contact as tripping switch

The protective relay can be supplied with a dry-reed magnetic switch, CO change-over (variant 3) (see dimensional drawing supplied).

Electrical data for CO change-over dry-reed magnetic switch

Electrical data	
DC switching capacity	1.2 W…150 W
AC switching capacity (50 Hz)	1.2 VA…200 VA
Switching voltage AC/DC	24 V…250 V
Switched current AC/DC	4.8 mA…1 A

Table 21: Electrical data

Switching capacity (switching load on an off)	
Minimum switched current AC/DC (lowest voltage)	50 mA (at 24 V)
Minimum switched current AC/DC (highest voltage)	4.8 mA (at 250 V)
Maximum switched current DC (highest current)	1.0 A (at 150 V with L/R = 40 ms)
Maximum switched current DC (highest voltage)	0.6 A (at 250 V with L/R = 40 ms)
Maximum switched current AC (highest current)	1 A (at 200 V with cos φ = 0.6)
Maximum switched current AC (highest voltage)	0.8 A (at 250 V with cos φ = 0.6)
Switching operations	1,000 cycles

Table 22: **Switching capacity (switching load on an off)**

Dielectric strength	
AC dielectric strength between all voltage-carrying connections and the grounded parts	2,500 V, 50 Hz, test duration 1 minute
AC dielectric strength between the opened contacts	1,150 V, 50 Hz, test duration 1 minute

Table 23: Dielectric strength

8.3.2 Protective relay with several dry-reed magnetic switches

The protective relay can be supplied with several independent dry-reed magnetic switches. These can be designed as normally open (NO) or normally closed (NC) contacts and are electrically isolated (see dimensional drawing supplied).

Electrical data for normally open (NO) and normally closed (NC) dry-reed magnetic switch

8.4 Technical data for pressure monitoring device

General technical data

Setup	Outdoor model
Ambient temperature	-40°C…+80°C (mechanical)
Cable gland	M25x1.5
Degree of protection	IP55 in accordance with IEC 60529 (enclosed device)
Relay actuation	Corrugated tubing with counter-pressure spring
Oil temperature	-40°C – +100°C
Weight	approx. 1.2 kg
Equipment	For standard insulating fluids (IEC60296 and IEC60422) and alternative insulating fluids
Sealing material (oil – air)	VITON
Permitted pressure range (absolute pressure)	1 bar…6 bar, vacuum not permitted
Upper switching pressure	3.8 ±0.2 bar (trip pressure)
Lower switching pressure	2.8 ± 0.2 bar
Snap-action switch	
Connection terminals	Lead connection: 1 or 2 leads per terminal (Ø 0.75…2.5 mm²)
Contacts	1xNO (normally open), 1xNC (normally closed)
Utilization category	IEC 60947-5-1: AC 15: 230 V/1 A DC 13: 60 V/0.5 A
Maximum continuous current	10 A
Rated insulation voltage	AC: 2.5 kV/min

Table 24: General technical data

8.5 Limit values for dielectric strength and water content of insulating fluids

The following tables provide the limit values for dielectric strength (measured in accordance with IEC 60156) and water content (measured in accordance with IEC 60814) of insulating fluids for OILTAP® on-load tap-changers. The values have been established on the basis of IEC 60422.

In operation	U_d	H_2O
When commissioning the transformer for the first time	> 60 kV/2.5 mm	< 12 ppm
During operation	> 30 kV/2.5 mm	< 40 ppm
After maintenance	> 50 kV/2.5 mm	< 15 ppm

Table 25: Limit values for insulating fluids for neutral point applications

In operation	U_d	H_2O
When commissioning the transformer for the first time	> 60 kV/2.5 mm	< 12 ppm
During operation	> 40 kV/2.5 mm	< 30 ppm
After maintenance	> 50 kV/2.5 mm	< 15 ppm

Table 26: Limit values for insulating fluids for non-neutral point applications

9 Drawings

9.1 OILTAP® V 200, installation drawing (893945)

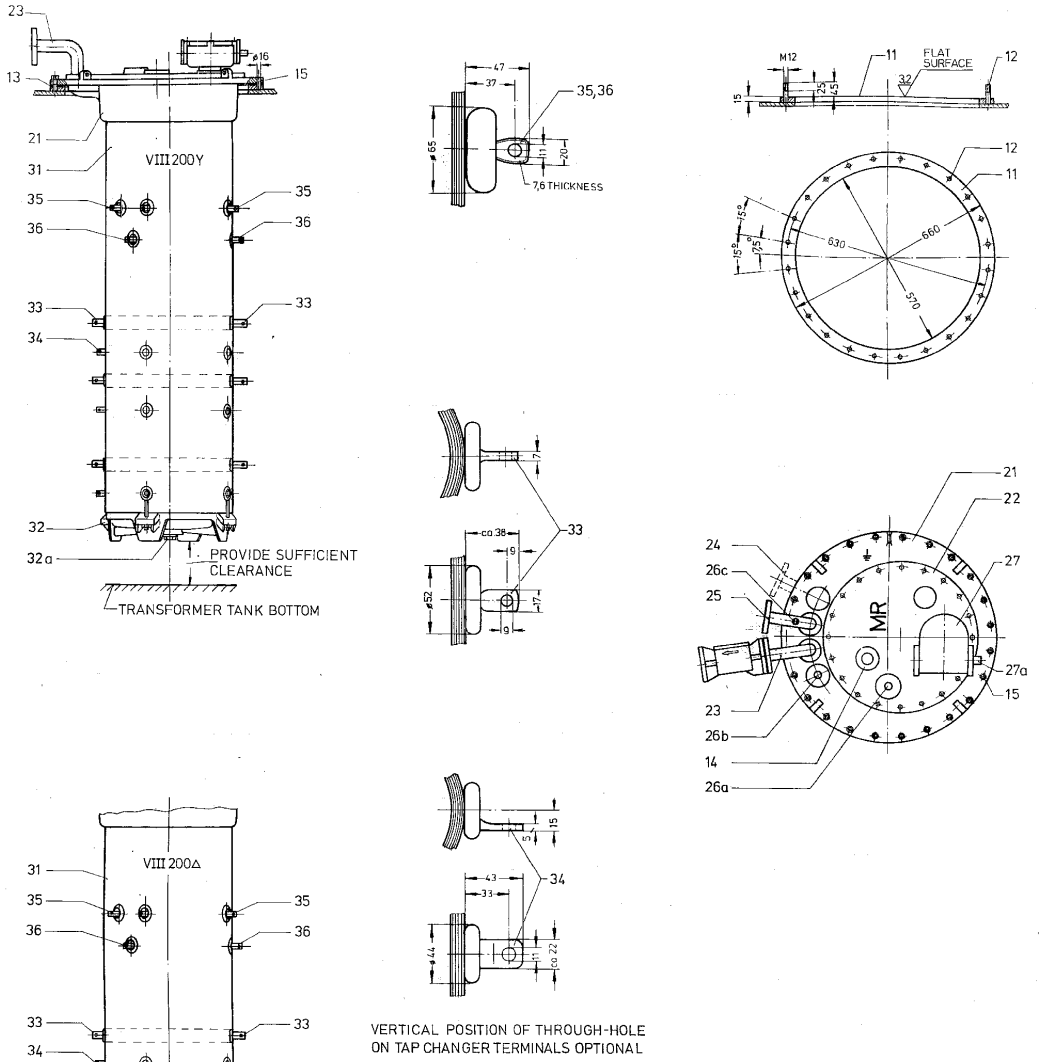

11 - MOUNTING FLANGE ON TRANSFORMER COVER
12 - FIXING BOLT M12
13 - GASKET FOR TAP CHANGER HEAD
14 - INSPECTION WINDOW FOR POS. INDICATION
15 - THROUGH-HOLE

21 - TAP CHANGER HEAD
22 - COVER OF TAP CHANGER HEAD
23 - PIPE CONNECTION R FOR PROTECTIVE RELAY
24 - PIPE CONNECTION Q FOR RETURN PIPE (WITH OIL FILTER UNIT ONLY)
25 - PIPE CONNECTION S FOR SUCTION PIPE
26a - BLEEDER SCREW OF TAP CHANGER HEAD COVER
26b - BLEEDER SCREW FOR TRANSFORMER OIL
26c - BLEEDER SCREW FOR SUCTION PIPE
27 - UPPER GEAR UNIT WITH DRIVE SHAFT 27a

31 - SELECTOR SWITCH OIL COMPARTMENT
32 - BOTTOM OF OIL COMPARTMENT WITH KEROSENE SCREW 32a
33 - SELECTOR SWITCH TERMINAL
34 - OUTPUT TERMINAL OR NEUTRAL TERMINAL
35 - CHANGE-OVER SELECTOR TERMINAL "+" AND "-"
36 - CHANGE-OVER SELECTOR TERMINAL "0"

9.2 OILTAP® V 350, installation drawing (893821)

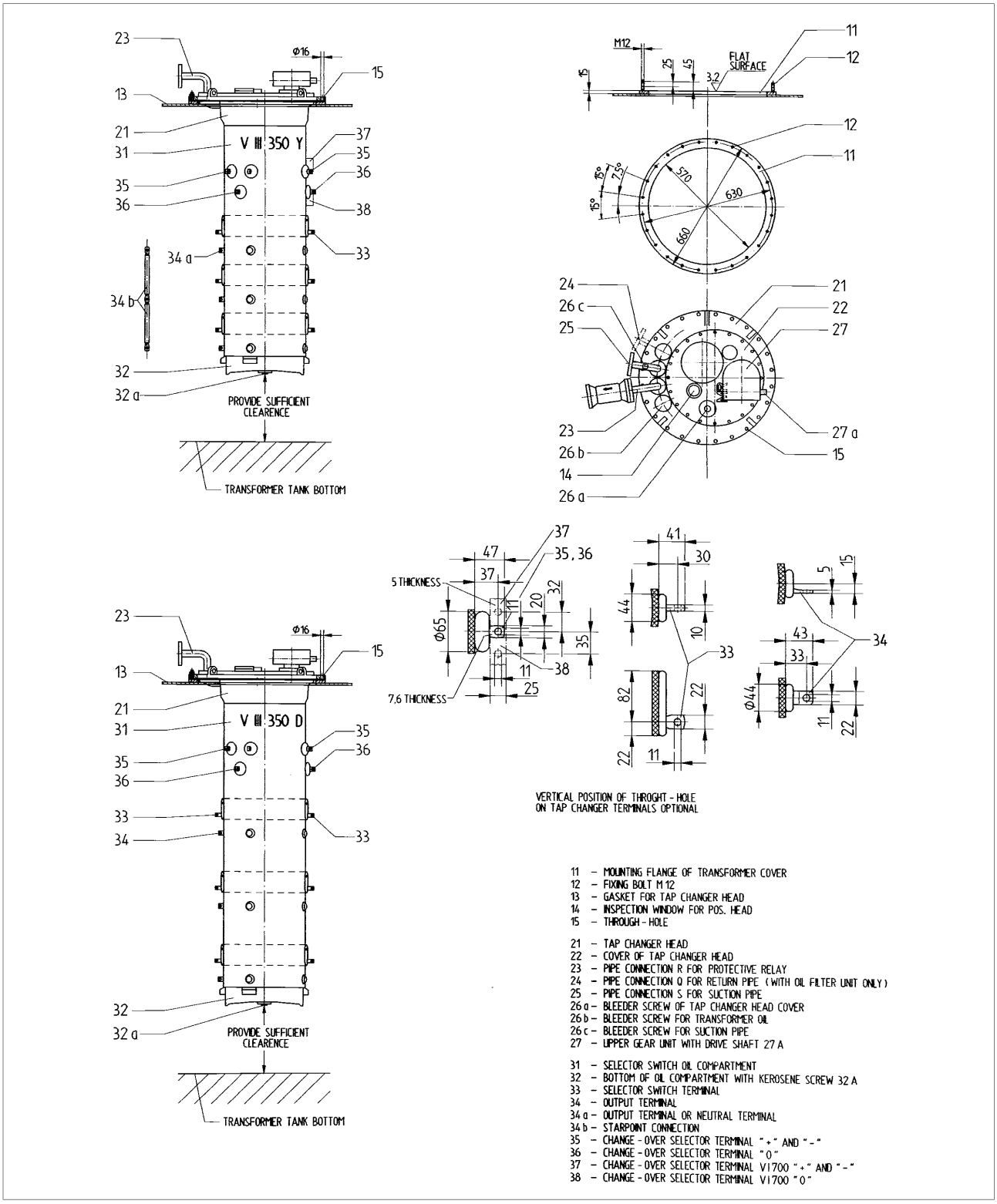

9.3 OILTAP® V, tracing template for on-load tap-changer head (893787)

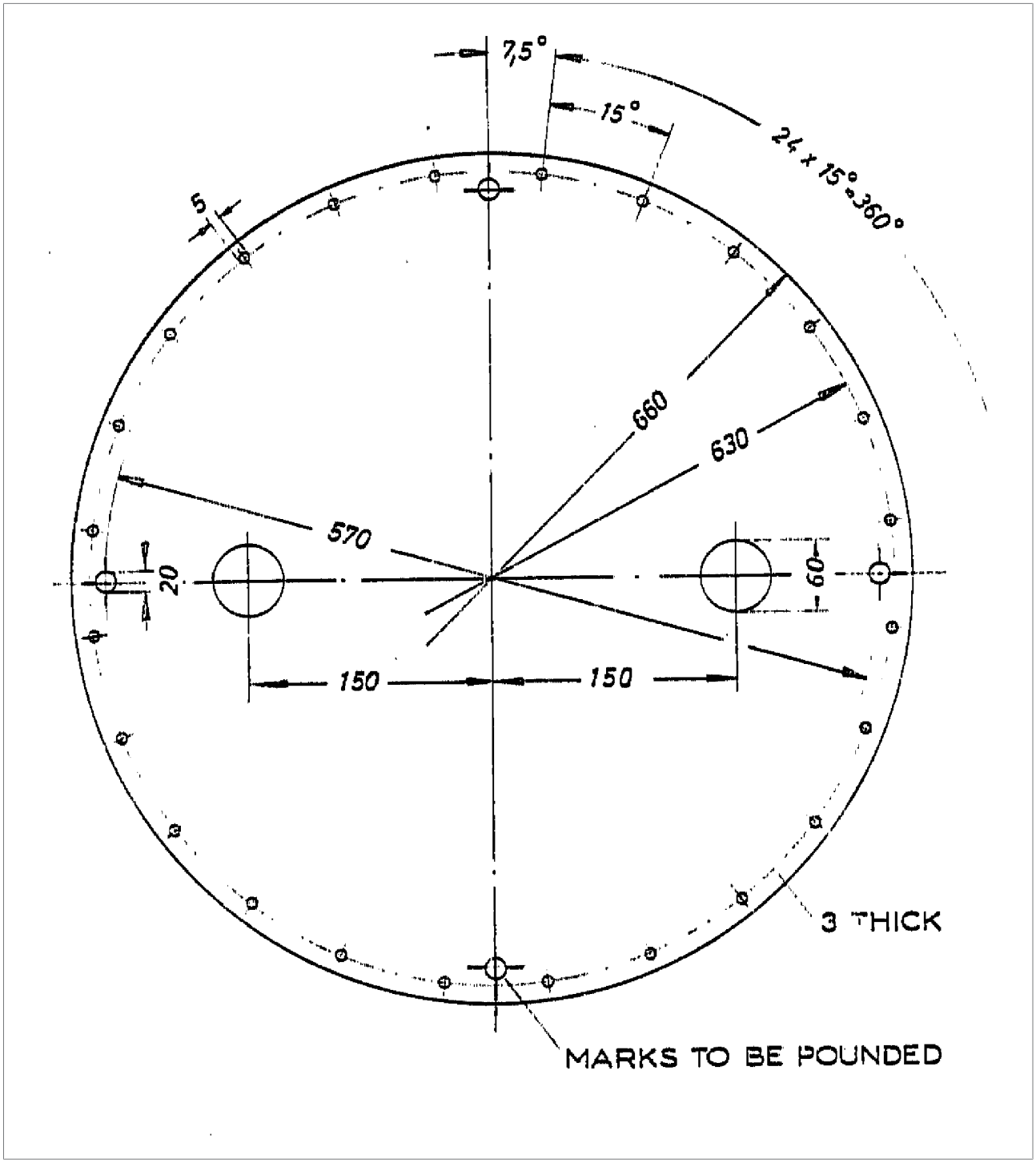

9.4 OILTAP® V, on-load tap-changer head (893779)

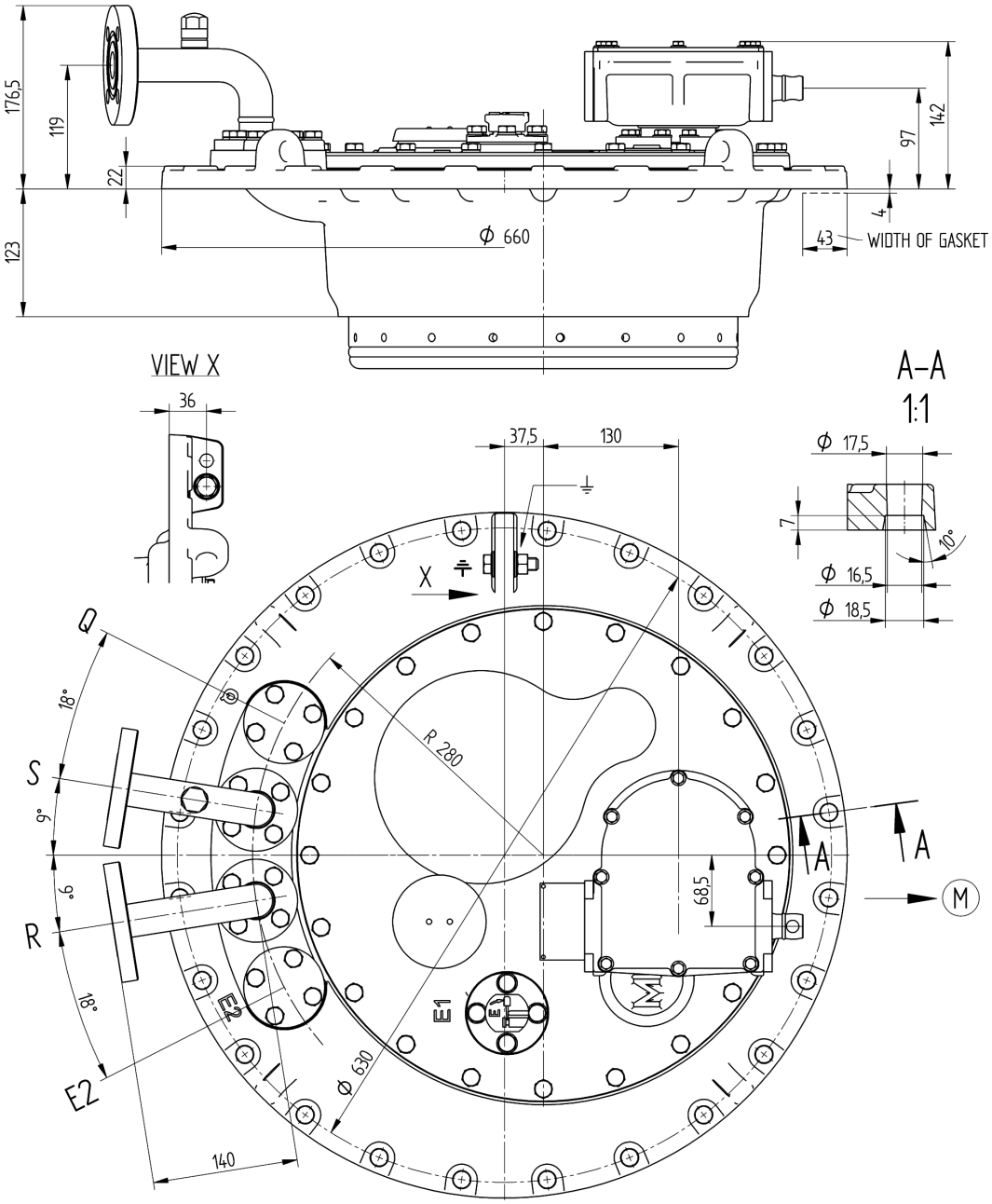

E1 = BLEEDING FACILITY FOR TAP-CHANGER HEAD
E2 = BLEEDING FACILITY FOR SPACE UNDER THE HEAD OUTSIDE THE TAP-CHANGER OIL COMPARTMENT
R = CONNECTION FOR PROTECTIVE RELAY (EXCHANGEABLE WITH CONNECTION Q)
Q = CONNECTION FOR OIL RETURN (ONLY FOR OIL FILTER)
S = CONNECTION FOR SUCTION PIPE
CONNECTIONS ORIENTABLE THROUGH 360°
⏚ = EARTH CONNECTION M 12
(M) = DRIVE SIDE OF ON-LOAD TAP-CHANGER

9.5 OILTAP® V, supporting flange for special bell-type tank installation version (893864)

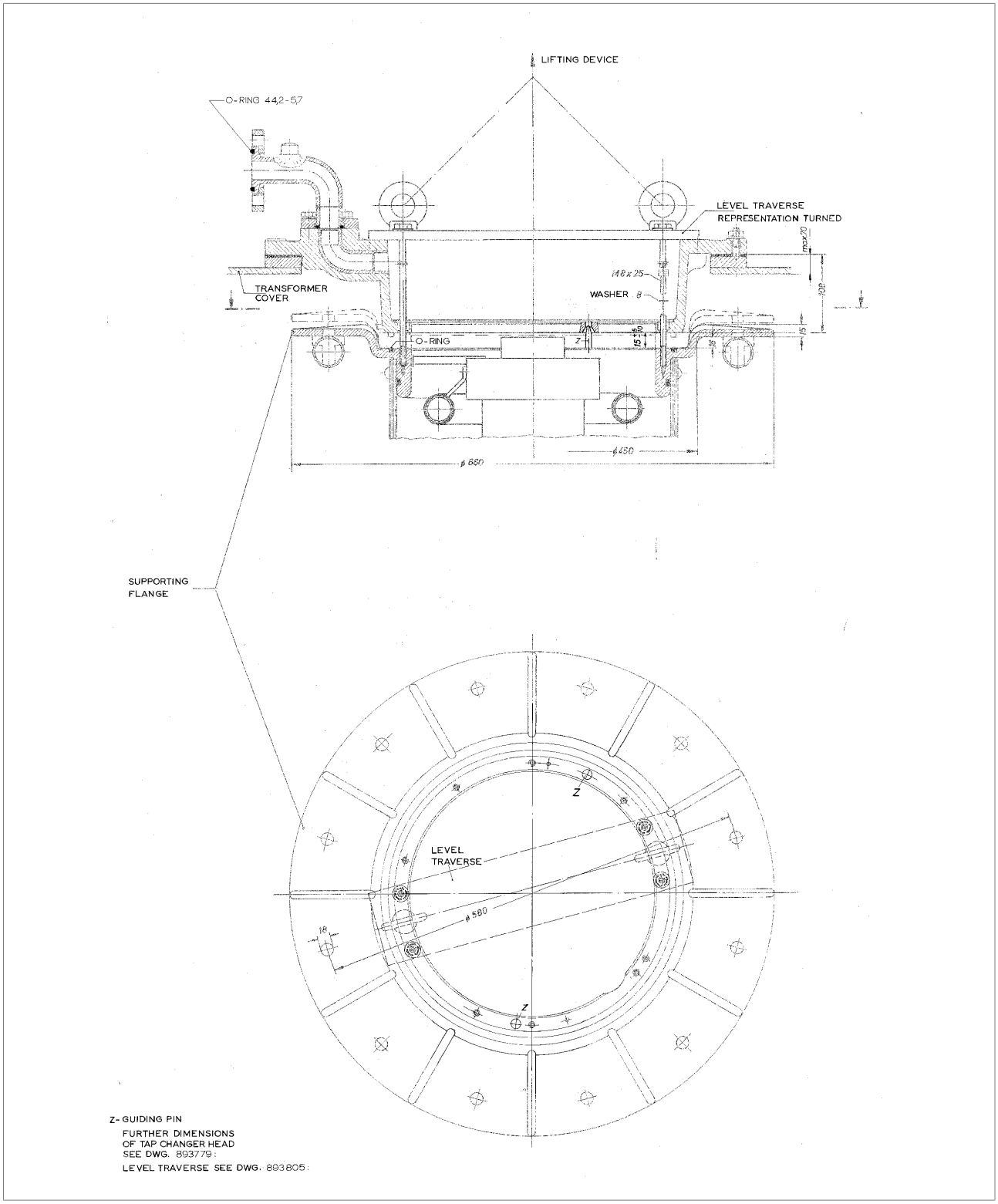

9.6 OILTAP® V, lifting traverse (893805)

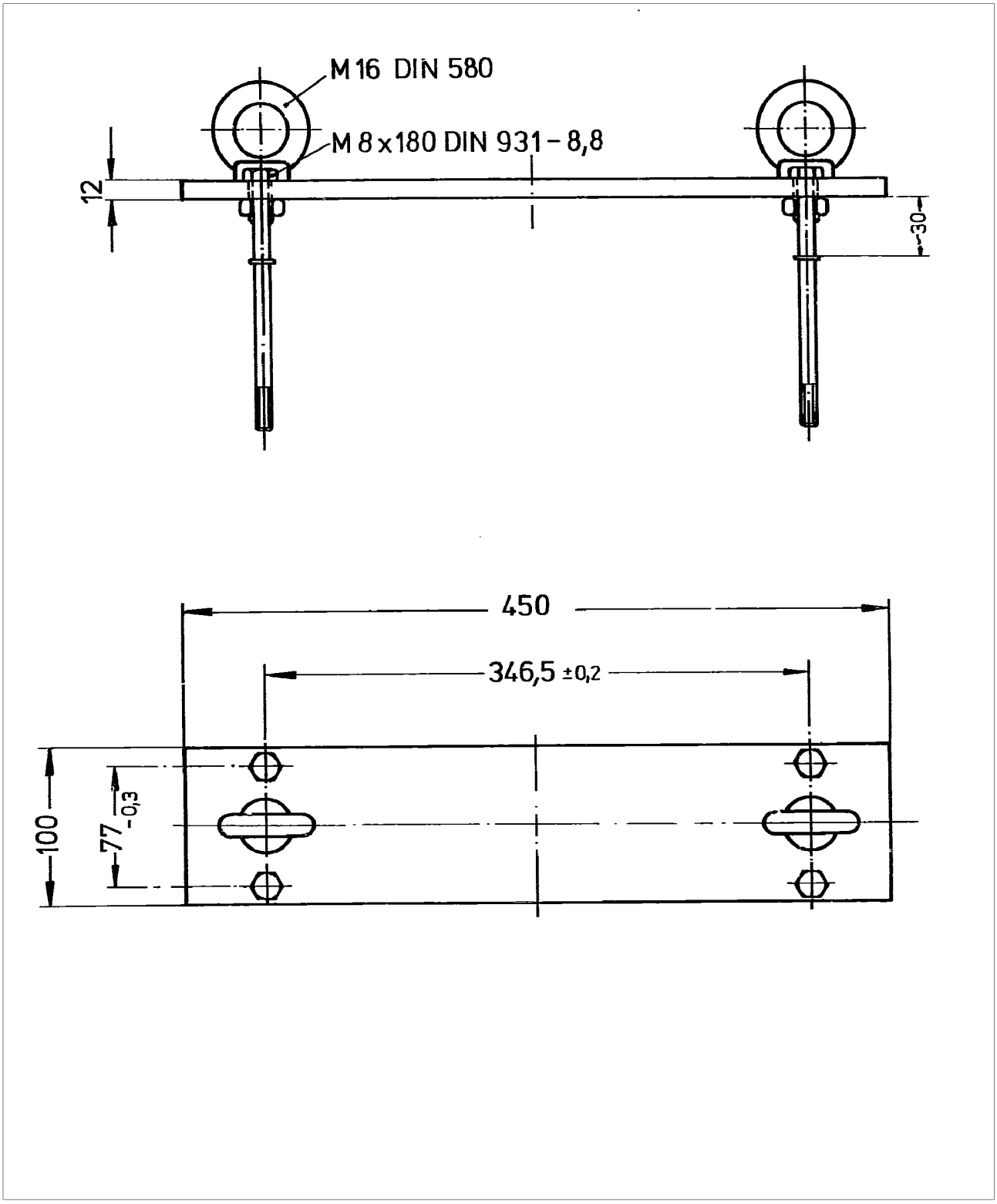

9.7 Bevel gear CD 6400, dimensional drawing (892916)

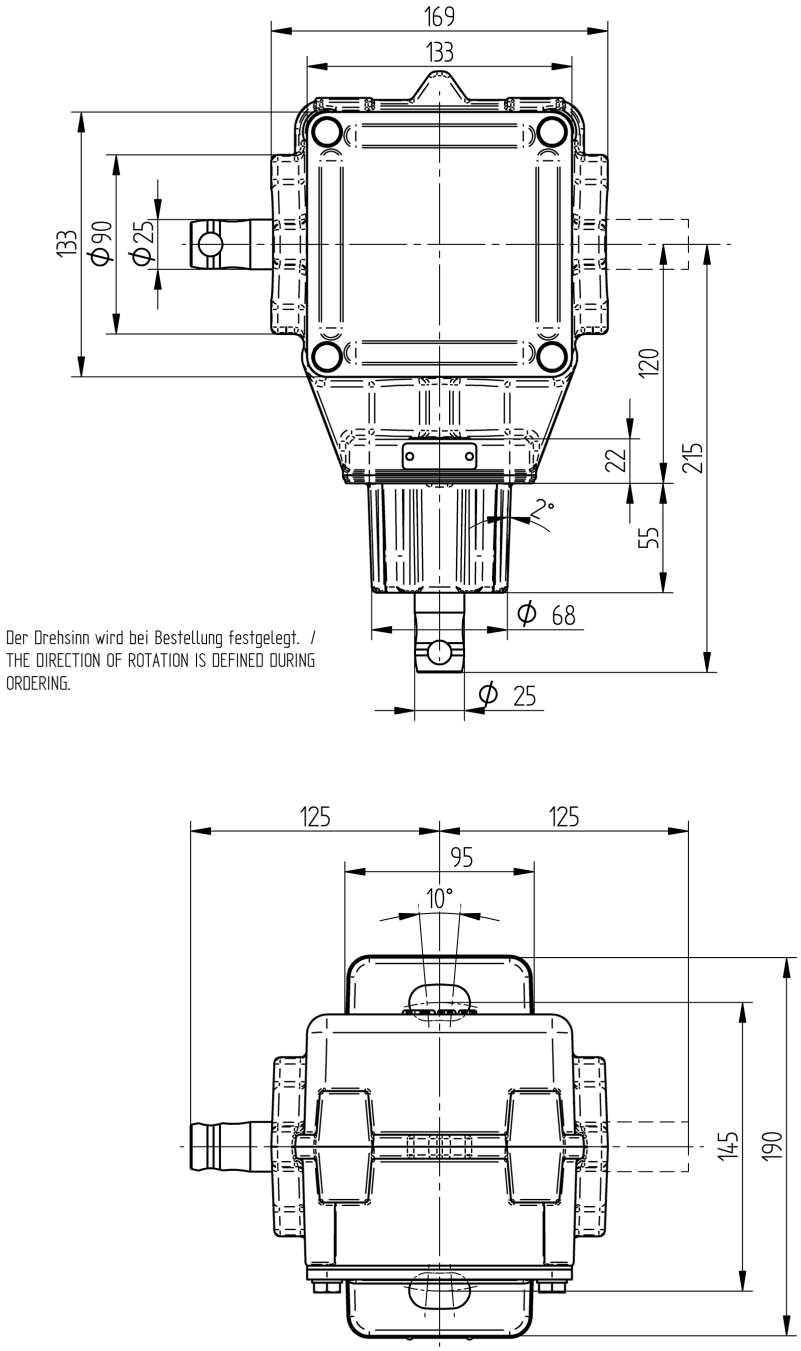

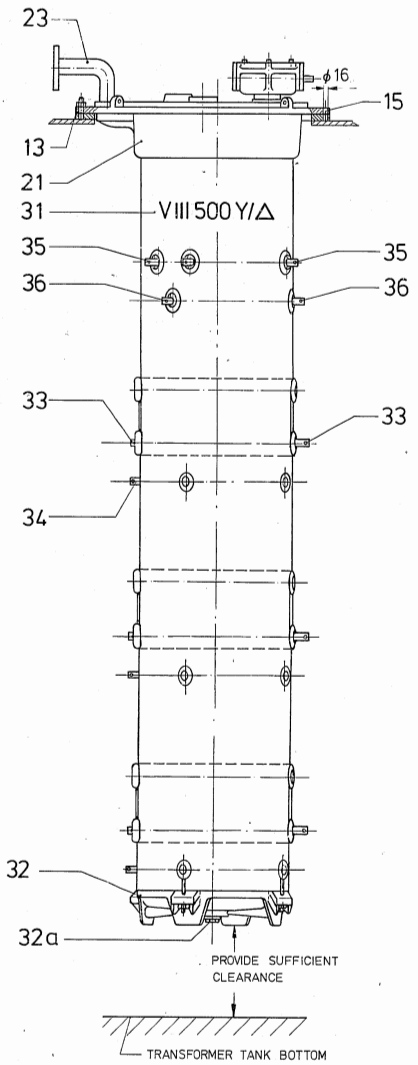

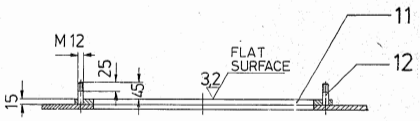

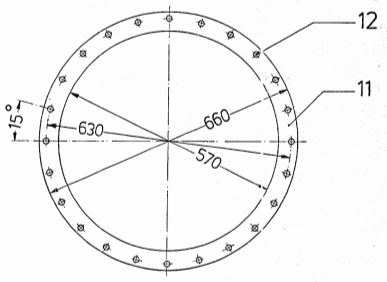

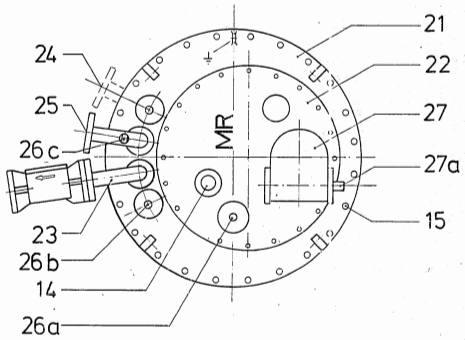

11 - MOUNTING FLANGE ON TRANSFORMER COVER

12 - FIXING BOLT M12

13 - GASKET FOR TAP CHANGER HEAD

14 - INSPECTION WINDOW FOR POS. INDICATION

15 - THROUGH HOLE 16 MM DIA.

21 - TAP CHANGER HEAD

22 - COVER OF TAP CHANGER HEAD

23 - PIPE CONNECTION R FOR PROTECTIVE RELAY

24 - PIPE CONNECTION Q FOR RETURN PIPE (WITH OIL FILTER UNIT ONLY)

25 - PIPE CONNECTION S FOR SUCTION PIPE

26a - BLEEDER SCREW OF TAP CHANGER HEAD COVER

26b - BLEEDER SCREW FOR TRANSFORMER OIL

26c - BLEEDER SCREW FOR SUCTION PIPE

27 - UPPER GEAR UNIT WITH DRIVE SHAFT 27a

31 - SELECTOR SWITCH OIL COMPARTMENT

32 - BOTTOM OF OIL COMPARTMENT WITH KEROSENE DRAIN SCREW 32a

33 - SELECTOR SWITCH TERMINAL

34 - OUTPUT TERMINAL OR NEUTRAL TERMINAL

35 - CHANGE OVER SELECTOR TERMINAL "+" AND "-"

36 - CHANGE OVER SELECTOR TERMINAL "0"

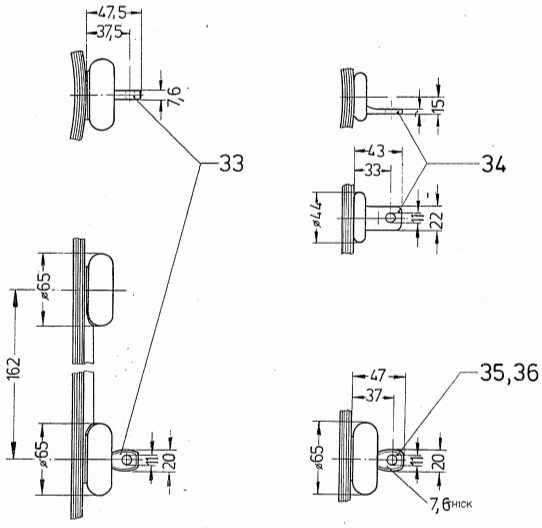

VERTICAL POSITION OF THROUGH-HOLE ON TAP CHANGER TERMINALS OPTIONAL

5.	22635	8.12.86 Hoer
3.	16631	4.3.85
.2		15.10.83
.1		11.5.83
Nr.	Datum	
Änderungen		
gez. 27.1.82 Glaus		
gepr. 28.1.82 Kloth		

MASCHINENFABRIK REINHAUSEN

ON-LOAD TAP CHANGER TYPE V500

INSTALLATION DRAWING

894 566 : 4E/ TN 590

894 566 :

Glossary

CO

Change-Over contact

DC

Direct current

Dielectric strength

Material-specific property of isolators [kV/2.5 mm]; maximum electrical field strength without a breakdown (arc)

IEC

The International Electrotechnical Commission (IEC for short) is involved in the preparation and publication of international standards for electrical, electronic and related technologies.

IP

Ingress protection

MR

Maschinenfabrik Reinhausen GmbH

NC

Normally Closed contact

NO

Normally Open contact

NPT

National Pipe Thread (US thread standard)

Maschinenfabrik Reinhausen GmbH
Falkensteinstrasse 8
93059 Regensburg

+49 (0)941 4090-0
+49(0)941 4090-7001
sales@reinhausen.com

www.reinhausen.com

4427491/01 EN - OILTAP® V -
F0335301 - 11/18 - Maschinenfabrik Reinhausen GmbH 2018

THE POWER BEHIND POWER.