On-load tap-changer OILTAP® G

Operating instructions

4446926/01 EN

© All rights reserved by Maschinenfabrik Reinhausen

Dissemination and reproduction of this document and use and disclosure of its content are strictly prohibited unless expressly permitted.

Infringements will result in liability for compensation. All rights reserved in the event of the granting of patents, utility models or designs.

The product may have been altered since this document was published.

We reserve the right to change the technical data, design and scope of supply.

Generally the information provided and agreements made when processing the individual quotations and orders are binding.

The original operating instructions were written in German.

Table of contents

1 Introduction ... 6
1.1 Manufacturer ... 6
1.2 Completeness ... 6
1.3 Safekeeping ... 6
1.4 Notation conventions ... 7
1.4.1 Hazard communication system ... 7
1.4.2 Information system ... 8
1.4.3 Instruction system ... 8

2 Safety ... 10
2.1 Appropriate use ... 10
2.2 Inappropriate use ... 11
2.3 Fundamental safety instructions ... 11
2.4 Personnel qualification ... 13
2.5 Personal protective equipment ... 14

3 Product description ... 15
3.1 Scope of delivery ... 15
3.2 On-load tap-changer ... 16
3.2.1 Function description ... 16
3.2.2 Design/versions ... 17
3.2.3 Name plate ... 18
3.2.4 Protective devices ... 18
3.3 Drive shaft ... 24
3.3.1 Function description ... 24
3.3.2 Design/versions ... 25
3.4 OF 100 Oil Filter Unit ... 30

4 Commissioning transformer at operating site ... 31
4.1 Filling the oil compartment of the on-load tap-changer with oil and bleeding it ... 31
4.2 Checking motor-drive unit ... 32
4.3 Checking protective relay ... 33
4.3.1 Checking protective relay (RS 2001, 2001/V, 2001/H, 2001/E, 2001/5, 2001/R, 2001/T, 2003) ... 33
4.3.2 Checking protective relay (RS 2004) ... 34
4.4 Checking pressure monitoring device ... 35

4.5 Commissioning the transformer 35

5 Operation 37

5.1 Operating the motor-drive unit with the hand crank 37

6 Fault elimination 39

6.1 Tripping the protective relay and re-commissioning the transformer 41

6.1.1 Flap valve in OPERATION position 42

6.1.2 Flap valve in OFF position 42

6.1.3 Re-commissioning the transformer 42

6.2 Tripping the pressure monitoring device and putting the transformer back into operation 43

6.2.1 Sensor in the OPERATION position 43

6.2.2 Sensor in the OFF position 44

6.2.3 Re-commissioning the transformer 44

7 Maintenance 45

7.1 Inspection 46

7.2 Maintenance intervals 47

7.3 Oil change 49

7.4 Performing DC resistance measurement on transformer 49

8 Technical data 51

8.1 Permissible ambient conditions 51

8.2 Technical data for protective relay 51

8.3 Special models of protective relay 54

8.3.1 Protective relay with CO change-over contact as tripping switch 54

8.3.2 Protective relay with several dry-reed magnetic switches 55

8.4 Technical data for pressure monitoring device 56

8.5 Limit values for dielectric strength and water content of insulating fluids 57

9 Drawings 58

9.1 OILTAP® G, installation drawing (894641) 58

9.2 On-load tap-changer head (890716) 59

9.3 Special design for bell-type tank installation (890659) 60

9.4 Lifting cross for installing and removing the diverter switch insert (890442) 61

9.5 OILTAP® G - selector connection contacts (890741) 62

9.6 OILTAP® G – tracing template (890436) 64

9.7 Bevel gear CD 6400, dimensional drawing (892916) 65

Glossary **66**

1 Introduction

This technical file contains detailed descriptions for monitoring during operation, fault elimination, and maintenance.

It also includes safety instructions and general information about the product.

Information about installation can be found in the installation and commissioning instructions.

This technical file is intended solely for specially trained and authorized personnel.

1.1 Manufacturer

The product is manufactured by:

Maschinenfabrik Reinhausen GmbH

Falkensteinstraße 8
93059 Regensburg
Tel.: (+49) 9 41/40 90-0
E-mail: sales@reinhausen.com

Further information on the product and copies of this technical file are available from this address if required.

1.2 Completeness

This technical file is incomplete without the supporting documents.

The following documents are considered supporting documents:

- Unpacking instructions (included in the scope of delivery)
- Routine test report (included in the scope of delivery)
- Connection diagrams (included in the scope of delivery)
- Dimensional drawings (included in the scope of delivery)
- Technical data - General section (available on request)
- Technical data - Product-specific section (available on request)

Also observe generally valid legislation, standards, and guidelines as well as specifications on accident prevention and environmental protection in the respective country of use.

1.3 Safekeeping

Keep this technical file and all supporting documents ready at hand and accessible for future use at all times.

1.4 Notation conventions

1.4.1 Hazard communication system

Warnings in this technical file are displayed as follows.

1.4.1.1 Warning relating to section

Warnings relating to sections refer to entire chapters or sections, sub-sections or several paragraphs within this technical file. Warnings relating to sections use the following format:

⚠ WARNING

Type of danger!

Source of the danger and outcome.

► Action

► Action

1.4.1.2 Embedded warning information

Embedded warnings refer to a particular part within a section. These warnings apply to smaller units of information than the warnings relating to sections. Embedded warnings use the following format:

⚠ DANGER! Instruction for avoiding a dangerous situation.

1.4.1.3 Signal words and pictograms

The following signal words are used:

Signal word	Definition
DANGER	Indicates a hazardous situation which, if not avoided, will result in death or serious injury.
WARNING	Indicates a hazardous situation which, if not avoided, could result in death or serious injury.
CAUTION	Indicates a hazardous situation which, if not avoided, could result in minor or moderate injury.
NOTICE	Indicates measures to be taken to prevent damage to property.

Table 1: Signal words in warning notices

Pictograms warn of dangers:

Pictogram	Definition
	Warning of a danger point
	Warning of dangerous electrical voltage
	Warning of combustible substances
	Warning of danger of tipping
	Warning of danger of crushing

Table 2: Pictograms used in warning notices

1.4.2 Information system

Information is designed to simplify and improve understanding of particular procedures. In this technical file it is laid out as follows:

Important information.

1.4.3 Instruction system

This technical file contains single-step and multi-step instructions.

Single-step instructions

Instructions which consist of only a single process step are structured as follows:

Aim of action
✓ Requirements (optional).
► Step 1 of 1.
⇨ Result of step (optional).
⇨ Result of action (optional).

Multi-step instructions

Instructions which consist of several process steps are structured as follows:

Aim of action
✓ Requirements (optional).
1. Step 1.
⇨ Result of step (optional).
2. Step 2.
⇨ Result of step (optional).
⇨ Result of action (optional).

2 Safety

- Read this technical file through to familiarize yourself with the product.
- This technical file is a part of the product.
- Read and observe the safety instructions provided in this chapter.
- Read and observe the warnings in this technical file in order to avoid function-related dangers.
- The product is manufactured on the basis of state-of-the-art technology. Nevertheless, risks to life and limb for the user or impairment of the product and other material assets due to the function may arise in the event of improper use.

2.1 Appropriate use

The product is an on-load tap-changer and adjusts the transmission ratio of transformers without interrupting the load flow. The product is designed solely for use in electrical energy systems and facilities. If used as intended and in compliance with the requirements and conditions specified in this technical file as well as the warning notices in this technical file and attached to the product, then the product does not present any danger to people, property or the environment. This applies throughout the service life of the product, from delivery, installation and operation to removal and disposal.

The following is considered intended use:

- Use the product only with the transformer/motor-drive unit specified in the order.
- The serial numbers of on-load tap-changer and on-load tap-changer accessories (drive, drive shaft, bevel gear, protective relay, etc.) must match if the on-load tap-changer and on-load tap-changer accessories are supplied as a set for one order.
- You will find the standard valid for the product and the year of issue on the nameplate.
- Operate the product in accordance with this provided technical file, the agreed delivery conditions and technical data.
- Ensure that all necessary work is performed by qualified personnel only.
- Only use the equipment and special tools included in the scope of delivery for the intended purpose and in accordance with the specifications of this technical document.

Permitted electrical operating conditions

In addition to the design data in accordance with the order confirmation, observe the following limits for the through-current and the step voltage:

In the standard version, the on-load tap-changer is designed for sinusoidal 50/60 Hz alternating current with a curve form symmetrical to the zero axis and can switch 2 times the rated through-current I_r at its rated step voltage U_{ir}.

Exceeding the rated step voltage U_{ir} by up to 10% for a short period is permitted as long as the rated step capacity P_{StN} permissible for this step voltage is not exceeded.

2.2 Inappropriate use

Use is considered inappropriate if the product is used in a way other than as described in the "Appropriate use" section. In addition, observe the following:

Prohibited electrical operating conditions

All operating conditions that do not comply with the design data in accordance with the order confirmation are prohibited.

Prohibited operating conditions may arise due to short circuits as well as due to inrush current impulses when energizing transformers or other electrical machines. This applies to the affected transformer itself just as it does to transformers electrically connected in parallel or serially or other electrical machines.

Higher voltages may occur due to transformer overexcitation following load shedding, for example.

Operations outside of the permitted operating conditions can lead to injury to persons and damage to the product.

- Prevent any such operations outside of the permitted operating conditions by taking suitable measures.

2.3 Fundamental safety instructions

To prevent accidents, disruptions and damage as well as unacceptable adverse effects on the environment, those responsible for transport, installation, operation, maintenance and disposal of the product or parts of the product must ensure the following:

Personal protective equipment

Loosely worn or unsuitable clothing increases the danger of becoming trapped or caught up in rotating parts and the danger of getting caught on protruding parts. This poses a danger to life and limb.

- Wear appropriate personal protective equipment such as a helmet, work gloves, etc. for the respective activity.
- Never wear damaged personal protective equipment.
- Never wear rings, necklaces, or other jewelry.
- If you have long hair, wear a hairnet.

Work area

Untidy and poorly lit work areas can lead to accidents.

- Keep the work area clean and tidy.
- Make sure that the work area is well lit.
- Observe the applicable laws for accident prevention in the relevant country.

Working during operation

The product may only be operated in a sound, operational condition. Otherwise it poses a danger to life and limb.

- Regularly check the operational reliability of safety equipment.
- Comply with the inspection work, maintenance work and maintenance intervals described in this technical file.

Explosion protection

Highly flammable or explosive gases, vapors and dusts can cause serious explosions and fire. This increases the danger to life and limb.

- Do not install, operate or perform maintenance work on the product in areas where a risk of explosion is present.

Safety markings

Warning signs and safety information plates are safety markings on the product. They are an important aspect of the safety concept.

- Observe all safety markings on the product.
- Make sure all safety markings on the product remain intact and legible.
- Replace safety markings that are damaged or missing.

Ambient conditions

To ensure reliable and safe operation, the product must only be operated under the ambient conditions specified in the technical data.

- Observe the specified operating conditions and requirements for the installation location.

Auxiliary materials and operating materials

Auxiliary materials and operating materials not approved by the manufacturer can lead to personal injury, damage to property and malfunctions of the product.

- Only use insulating fluids [▶ Section 8.1, Page 51] approved by the manufacturer.
- Only use conductive and grounded hoses, pipes and pump equipment that are approved for flammable liquids.

- Only use lubricants and auxiliary materials approved by the manufacturer.
- Contact the manufacturer.

Modifications and conversions

Unauthorized or inappropriate changes to the product may lead to personal injury, material damage and operational faults.

- Only modify the product after consultation with Maschinenfabrik Reinhausen GmbH.

Spare parts

Spare parts not approved by Maschinenfabrik Reinhausen GmbH may lead to physical injury, damage to the product and malfunctions.

- Only use spare parts that have been approved by Maschinenfabrik Reinhausen GmbH.
- Contact Maschinenfabrik Reinhausen GmbH.

2.4 Personnel qualification

The person responsible for assembly, commissioning, operation, maintenance and inspection must ensure that the personnel are sufficiently qualified.

Electrically skilled person

The electrically skilled person has a technical qualification and therefore has the required knowledge and experience, and is also conversant with the applicable standards and regulations. The electrically skilled person is also proficient in the following:

- Can identify potential dangers independently and is able to avoid them.
- Is able to perform work on electrical systems.
- Is specially trained for the working environment in which (s)he works.
- Must satisfy the requirements of the applicable statutory regulations for accident prevention.

Electrically trained persons

An electrically trained person receives instruction and guidance from an electrically skilled person in relation to the tasks undertaken and the potential dangers in the event of inappropriate handling as well as the protective devices and safety measures. The electrically trained person works exclusively under the guidance and supervision of an electrically skilled person.

Operator

The operator uses and operates the product in line with this technical file. The operating company provides the operator with instruction and training on the specific tasks and the associated potential dangers arising from improper handling.

Technical Service

We strongly recommend having maintenance, repairs and retrofitting carried out by our Technical Service department. This ensures that all work is performed correctly. If maintenance is not carried out by our Technical Service department, please ensure that the personnel who carry out the maintenance are trained and authorized by Maschinenfabrik Reinhausen GmbH to carry out the work.

Authorized personnel

Authorized personnel are trained by Maschinenfabrik Reinhausen GmbH to carry out special maintenance.

2.5 Personal protective equipment

Personal protective equipment must be worn during work to minimize risks to health.

- Always wear the personal protective equipment required for the job at hand.
- Never wear damaged personal protective equipment.
- Observe information about personal protective equipment provided in the work area.

Protective clothing	Close-fitting work clothing with a low tearing strength, with tight sleeves and with no protruding parts. It mainly serves to protect the wearer against being caught by moving machine parts.
Safety shoes	To protect against falling heavy objects and slipping on slippery surfaces.
Safety glasses	To protect the eyes from flying parts and splashing liquids.
Visor	To protect the face from flying parts and splashing liquids or other dangerous substances.
Hard hat	To protect against falling and flying parts and materials.
Hearing protection	To protect against hearing damage.
Protective gloves	To protect against mechanical, thermal, and electrical hazards.

Table 3: Personal protective equipment

3 Product description

3.1 Scope of delivery

The product is packaged with protection against moisture and is usually delivered as follows:

- Oil compartment with on-load tap-changer head
- Diverter switch insert
- Selector
- Motor-drive unit
- Drive shaft with coupling parts and bevel gear
- Protective device
- Lifting traverse (only included in the initial delivery, otherwise available as optional equipment)
- Lifting cross (only included in the initial delivery, otherwise available as optional equipment)
- Tracing template (only included in the initial delivery, otherwise available as optional equipment)
- Technical files

Please refer to the delivery slip for full details of scope of delivery.

On-load tap-changers can also be provided as an on-load tap-changer set with a common motor-drive unit.

Note the following information:

- Check the shipment for completeness on the basis of the shipping documents.
- Store the parts in a dry place until installation
- The product must remain in its airtight, protective wrapping and may only be removed immediately before installation

You will find more information in the "Packaging, transport, and storage" chapter.

3.2 On-load tap-changer

3.2.1 Function description

On-load tap-changers are used to adjust the transmission ratio of transformers without interrupting the load flow. Fluctuations in voltage occurring in the power transmission grid, for example, can therefore be compensated for. For this purpose, on-load tap-changers are fitted in transformers and connected to the active part of the transformer.

A motor-drive unit, which receives a control impulse (e.g. from a voltage regulator), changes the on-load tap-changer's operating position, which adapts the transmission ratio of the transformer to the respective operating requirements.

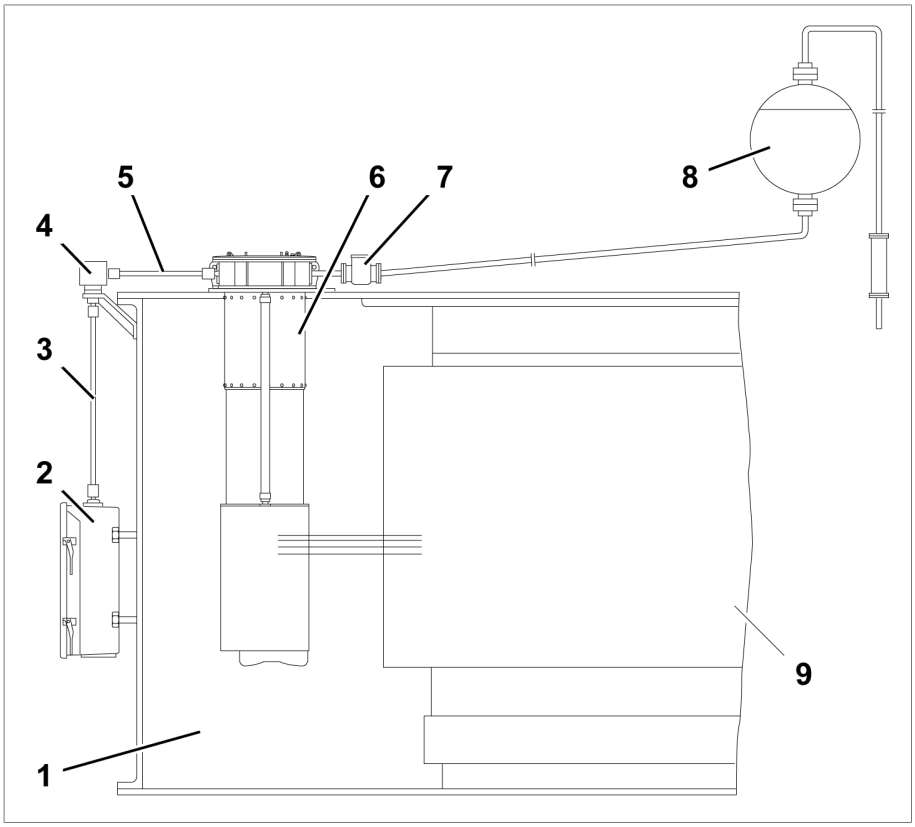

Figure 1: System overview of on-load tap-changer Transformer

1	Transformer tank	2	Motor-drive unit
3	Vertical drive shaft	4	Bevel gear
5	Horizontal drive shaft	6	On-load tap-changer
7	RS protective relay	8	Oil conservator
9	Active part of the transformer		

3.2.2 Design/versions

The on-load tap-changer consists of the on-load tap-changer head, oil compartment with built-in diverter switch insert and the tap selector mounted below (also available with change-over selector on request).

The design and designation of the most important on-load tap-changer components are shown in the installation drawings in the appendix.

For the number of maximum operating positions of the on-load tap-changer, refer to the technical data.

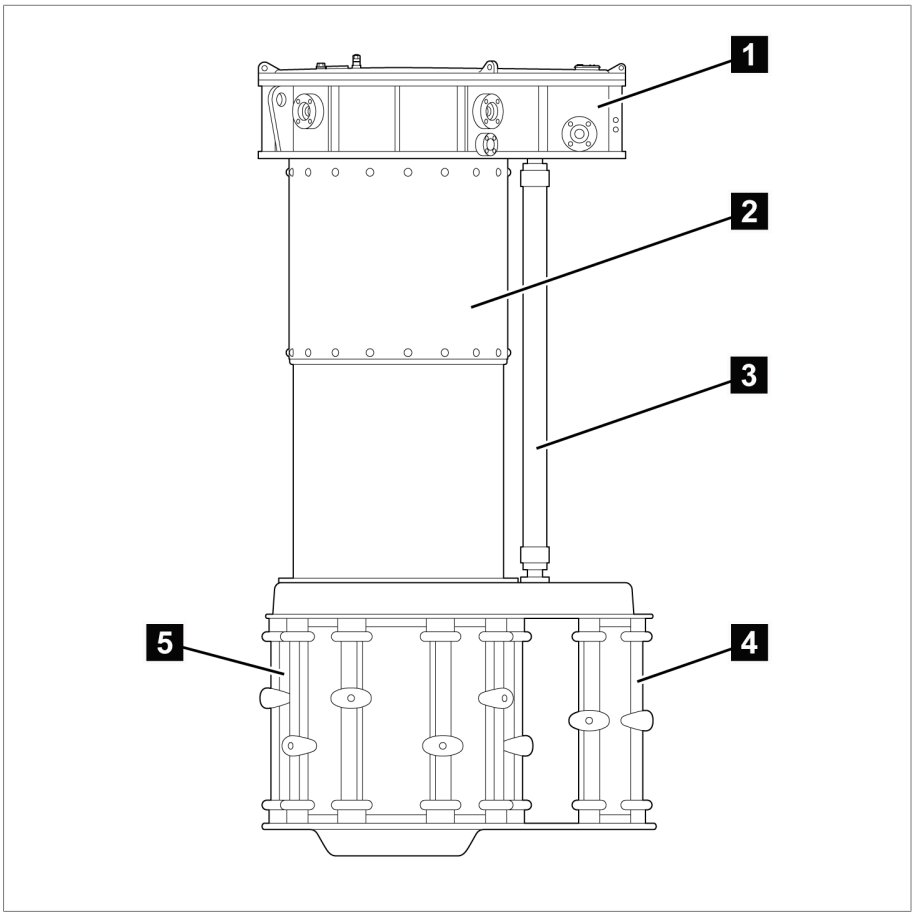

Figure 2: OILTAP® G

1 On-load tap-changer head	2 Oil compartment
3 Selector drive shaft	4 Change-over selector
5 Tap selector	

3.2.2.1 Pipe connections

The on-load tap-changer head features 6 pipe connections for different purposes.

Detailed information about the pipe connections is available in the drawing in the appendix [▶Section 9.2, Page 59].

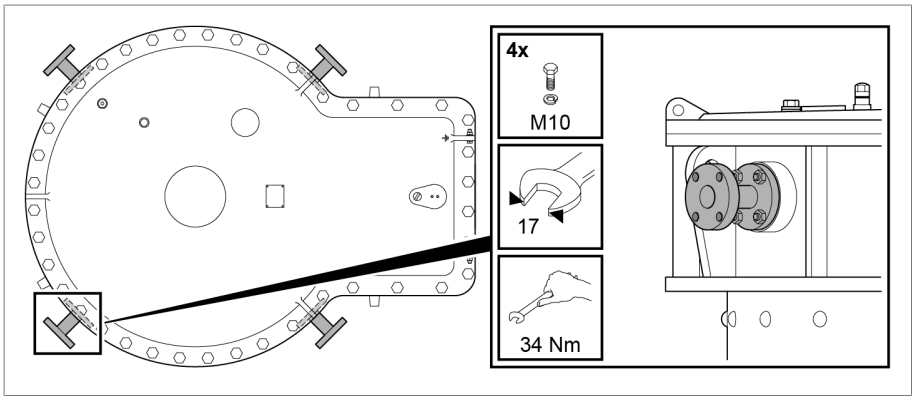

Figure 3: Pipe connections

3.2.3 Name plate

The nameplate is on the on-load tap-changer head cover.

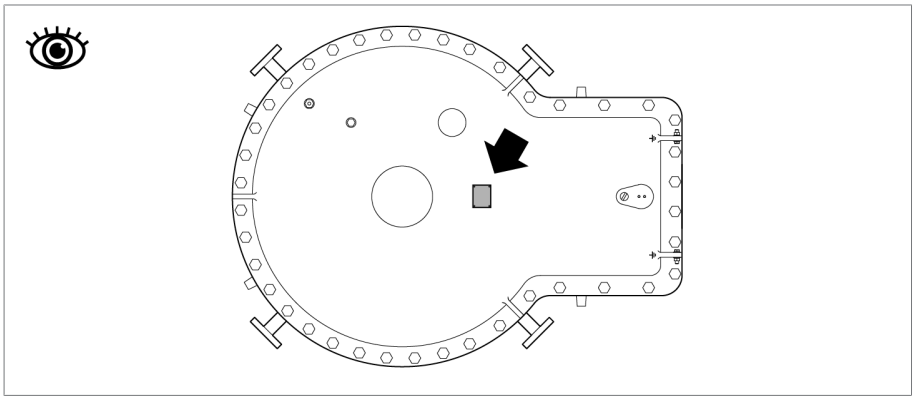

Figure 4: Position of nameplate

3.2.4 Protective devices

The on-load tap-changer is equipped with the following protective devices.

3.2.4.1 Protective relay

3.2.4.1.1 Function description

The protective relay is looped into the circuit breaker tripping circuit. It is tripped when the specified speed of flow from the on-load tap-changer head to the oil conservator is exceeded due to a fault. The flowing insulating fluid actuates the flap valve which tips over into position OFF. The contact in the dry-reed magnetic switch is thereby actuated, the circuit breakers are tripped, and the transformer is de-energized.

The protective relay is a component of an on-load tap-changer filled with insulating fluid and its properties conform to the respective applicable version of IEC publication 60214-1.

Diverter switch operations at rated switching capacity or at permissible overload will not cause the protective relay to trip.

The protective relay responds to flow, not to gas accumulated in the protective relay. It is not necessary to bleed the protective relay when filling the transformer with insulating fluid. Gas accumulation in the protective relay is normal.

3.2.4.1.2 Design/versions

Front view

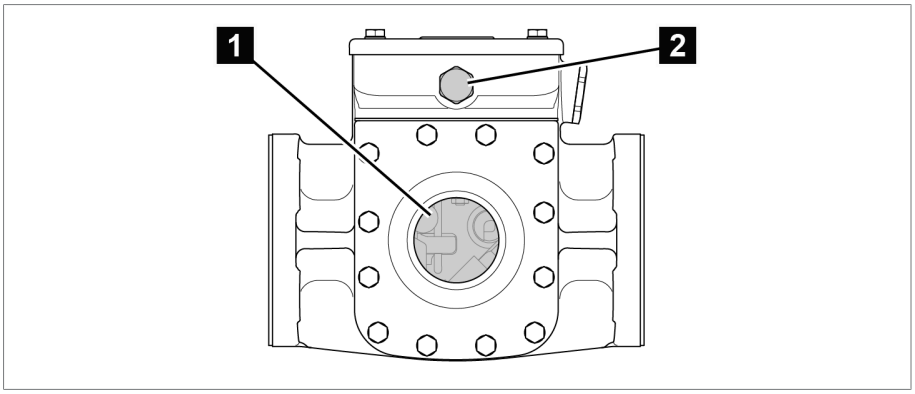

Figure 5: Protective relay RS 2001

1	Inspection window	2	Pressure equalization element

Rear view

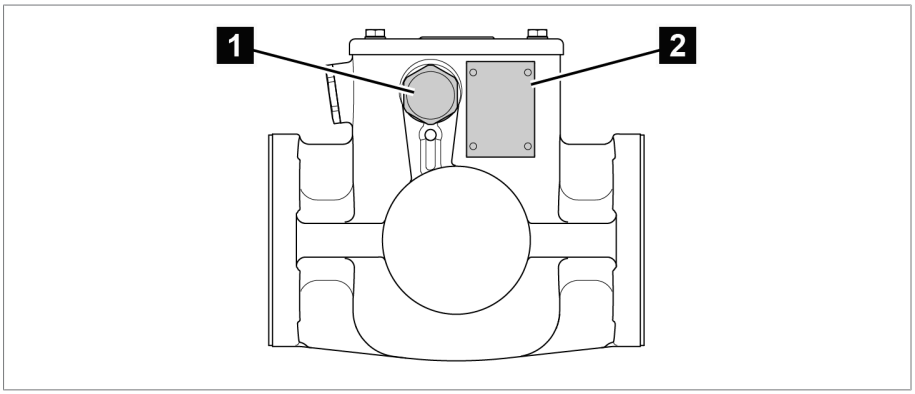

Figure 6: Protective relay RS 2001

1	Dummy plug	2	Nameplate

The protective relay RS 2001/R has an extra inspection window on the rear.

View from above

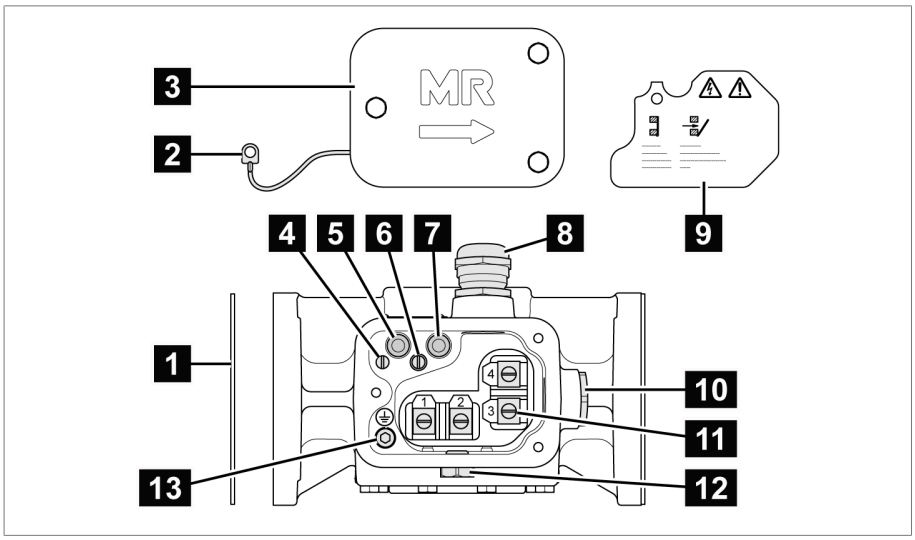

Figure 7: Protective relay RS 2001

1	Gasket	2	Potential tie-in
3	Terminal box cover	4	Slotted head screw for potential tie-in
5	OPERATION (reset) test button	6	Slotted head screw for protective cover
7	OFF (test tripping) test button	8	Cable gland
9	Protective cover	10	Dummy plug
11	Connection terminal	12	Pressure equalization element
13	Cylinder head screw for protective conductor connection		

The protective relays RS 2003 and RS 2004 have a 1/2"-14NPT adapter in place of the cable gland.

3.2.4.1.3 Nameplate

The nameplate is on the back of the protective relay.

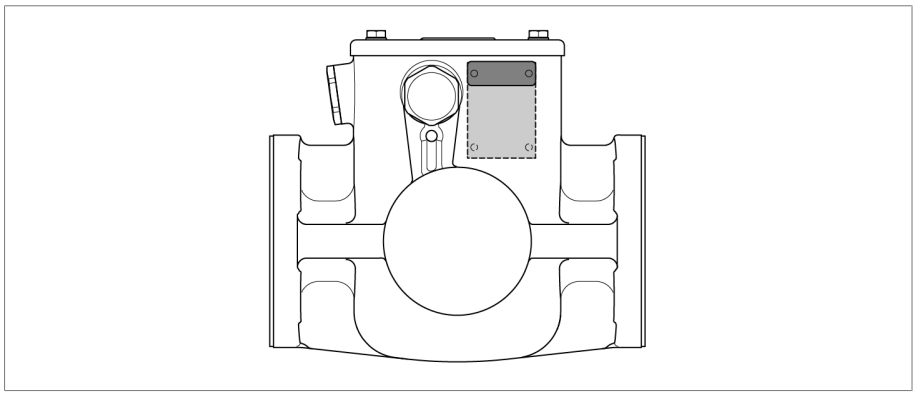

Figure 8: Nameplate

3.2.4.2 Pressure monitoring device DW

3.2.4.2.1 Function description

The DW 2000 pressure monitoring device protects the on-load tap-changer from impermissible pressure increases, contributing to the safety of the transformer. The pressure monitoring device is installed on the outside of the on-load tap-changer and is tripped by impermissible static and dynamic pressures in the on-load tap-changer oil compartment.

The pressure monitoring device uses a concept where a corrugated tube acts as a barometer together with a spring providing counter force. This assembly is mechanically linked to the sensor on the snap-action switch.

The pressure increase activates the sensor on the snap-action switch, which flips into the OFF position. This triggers the circuit breaker and de-energizes the transformer. The sensor on the snap-action switch has to be reset to the initial position by hand after tripping.

Low-energy interference does not cause the pressure monitoring device to trip since the required tripping pressure is not reached. The tripping pressure is set at the factory and prevented from being changed.

The pressure monitoring device responds to large pressure increases faster than the protective relay. The protective relay is part of the standard MR protection system and comes as standard.

Additional use of a pressure monitoring device also requires installation of the provided protective relay.

The features and characteristics of the pressure monitoring device comply with the respective applicable version of IEC publication 60214-1.

Diverter switch operations at the rated switching capacity or permitted overload do not cause the pressure-operated relay to trip.

The pressure-operated relay responds to a pressure change and not to gas accumulation under the pressure-operated relay. Gas accumulation under the pressure-operated relay is normal.

3.2.4.2.2 Design/versions

This chapter gives you an overview of the design of the pressure monitoring device.

For the OILTAP® G, use the pressure monitoring device variant for horizontal mounting.

The pressure monitoring device consists of a pressure measuring element and an adjacent snap-action switch.

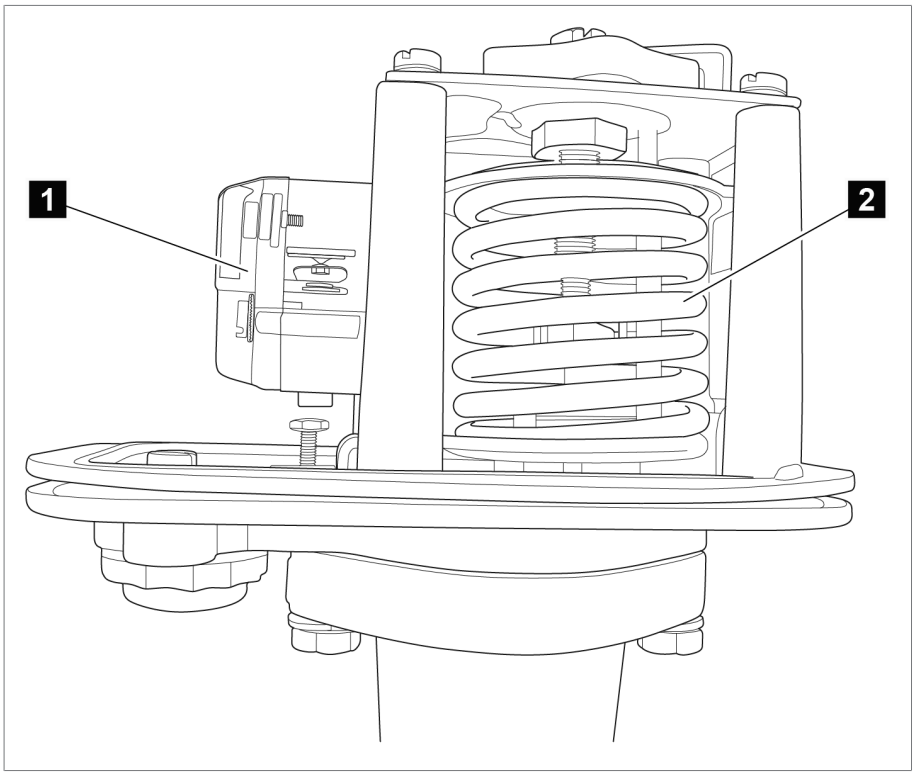

Figure 9: Snap-action switch and pressure measuring element

1	Snap-action switch	2	Pressure measuring element

The snap-action switch has one normally open switch and one normally closed switch with snap actuation.

During operation, the snap-action switch and pressure measuring element are protected by a cover cap. Ventilation is provided on the top of the pressure monitoring device.

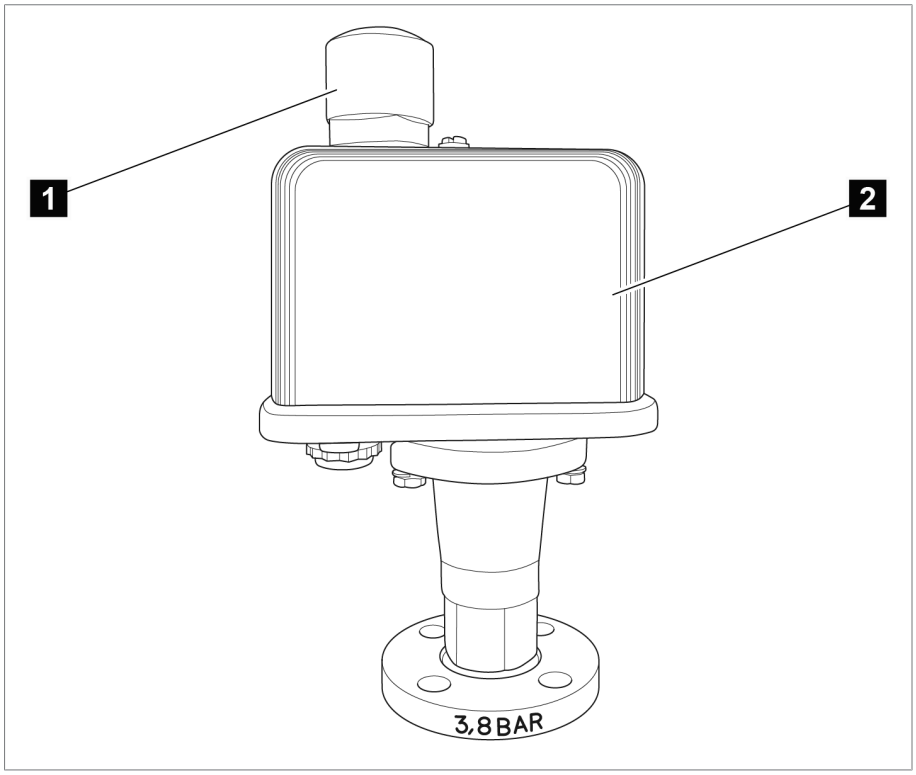

Figure 10: Pressure monitoring device with cover cap and ventilation

1 Ventilation	2 Cover cap

The housing and the cover cap of the pressure monitoring device consist of lightweight, corrosion-resistant metal.

3.3 Drive shaft

3.3.1 Function description

The drive shaft is the mechanical connection between the drive and the on-load tap-changer/de-energized tap-changer.

The bevel gear changes the direction from vertical to horizontal.

Accordingly, the vertical drive shaft has to be mounted between drive and bevel gear, and the horizontal drive shaft between bevel gear and on-load tap-changer or de-energized tap-changer.

3.3.2 Design/versions

The drive shaft consists of a square tube and is coupled at each end by two coupling brackets and one coupling bolt to the driving or driven shaft end of the device to be connected.

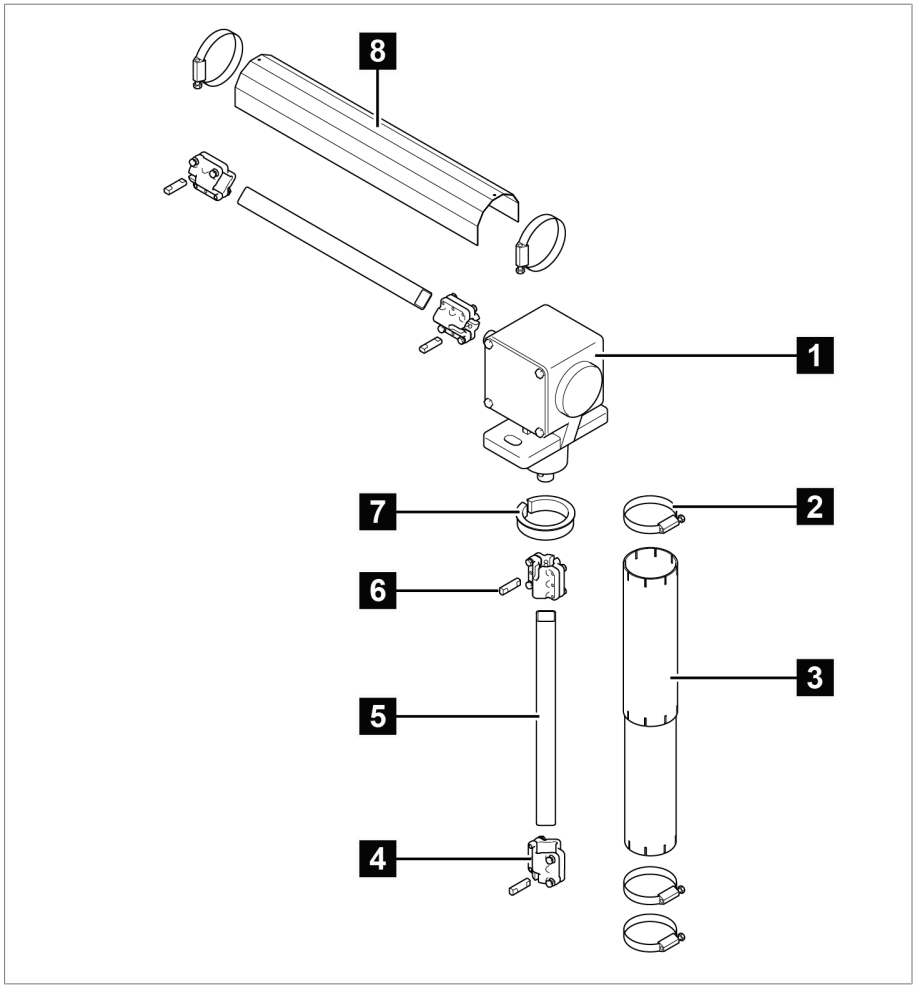

Figure 11: Components of the drive shaft

1	Bevel gear	2	Hose clip
3	Telescopic protective tube	4	Coupling bracket
5	Square tube	6	Coupling bolt
7	Adapter ring	8	Protective cover

3.3.2.1 Drive shaft without cardan joint and without insulator

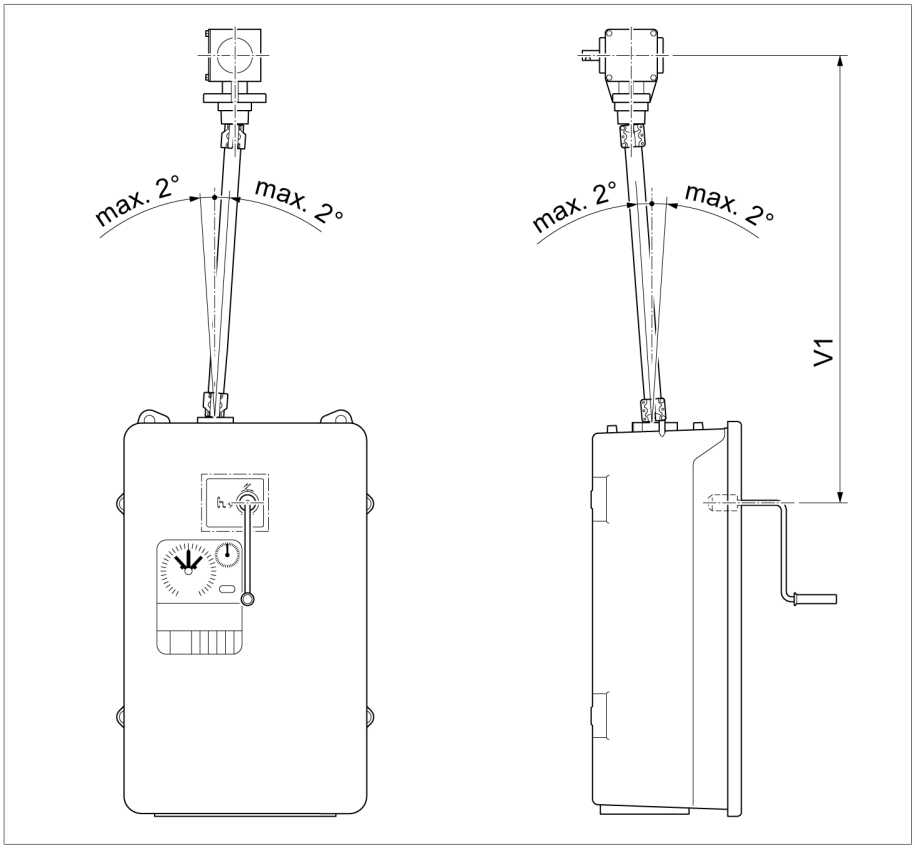

Figure 12: Drive shaft without cardan joint and without insulator (= standard version)

Configuration	V 1 min	Intermediate bearing
Middle of hand crank – middle of bevel gear (maximum permissible axial offset 2°)	536 mm	When the maximum value of 2472 mm is exceeded, it is necessary to use an intermediate bearing. V 1 ≤ 2472 mm (without intermediate bearing) V 1 > 2472 mm (with intermediate bearing)

3.3.2.2 Drive shaft without cardan joint and with insulator

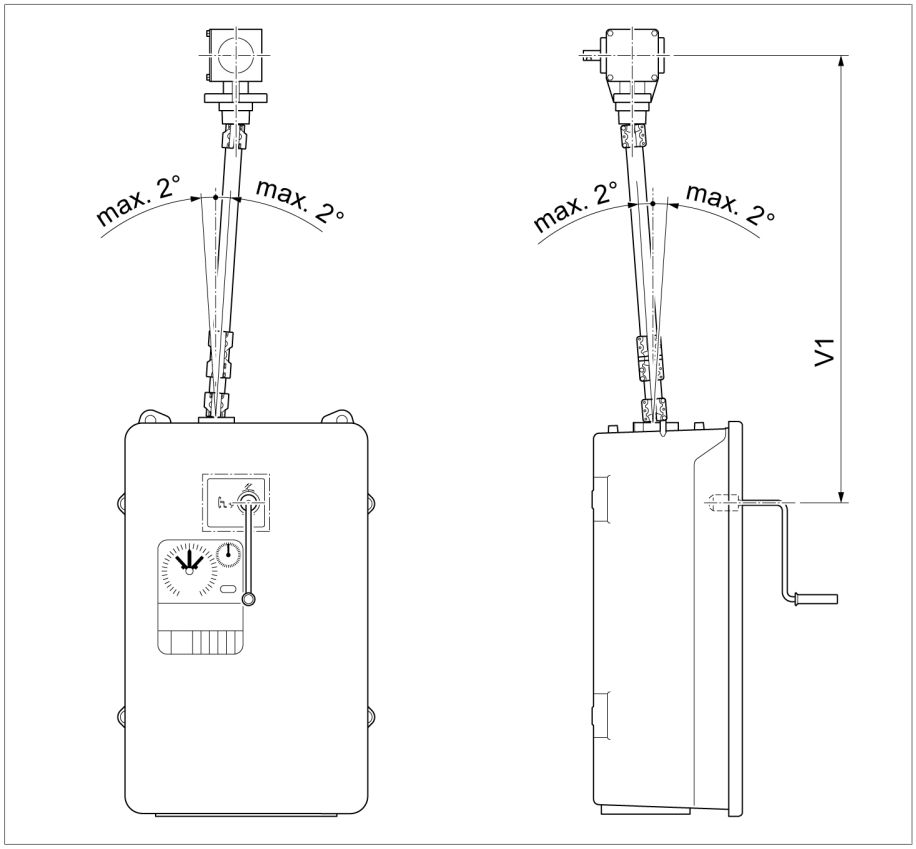

Figure 13: Drive shaft without cardan joint and with insulator (= special model)

Configuration	V 1 min	Intermediate bearing
Middle of hand crank – middle of bevel gear (maximum permissible axial offset 2°)	706 mm	When the maximum value of 2472 mm is exceeded, it is necessary to use an intermediate bearing. V 1 ≤ 2472 mm (without intermediate bearing) V 1 > 2472 mm (with intermediate bearing)

3.3.2.3 Drive shaft with cardan joints, without insulator

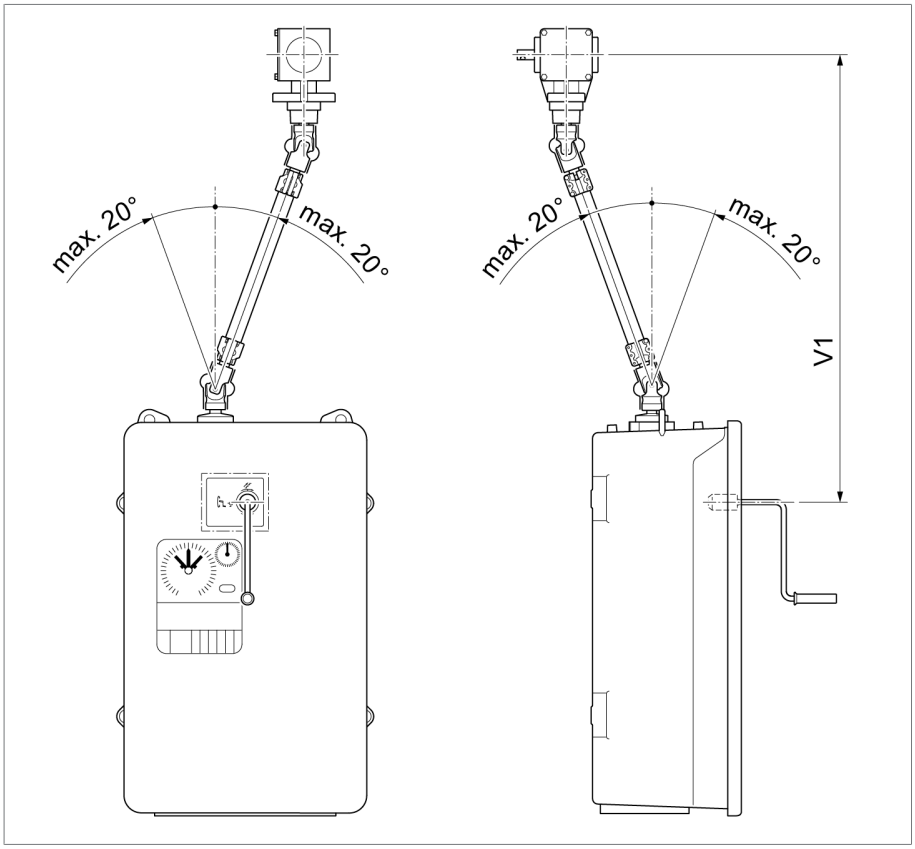

Figure 14: Drive shaft with cardan joints, without insulator (= special model)

Configuration	V 1 min [mm]	Intermediate bearing for [mm]
Middle of hand crank – middle of bevel gear (maximum permissible axial offset 20°)	798	V 1 > 2564

3.3.2.4 Drive shaft with cardan joints, with insulator

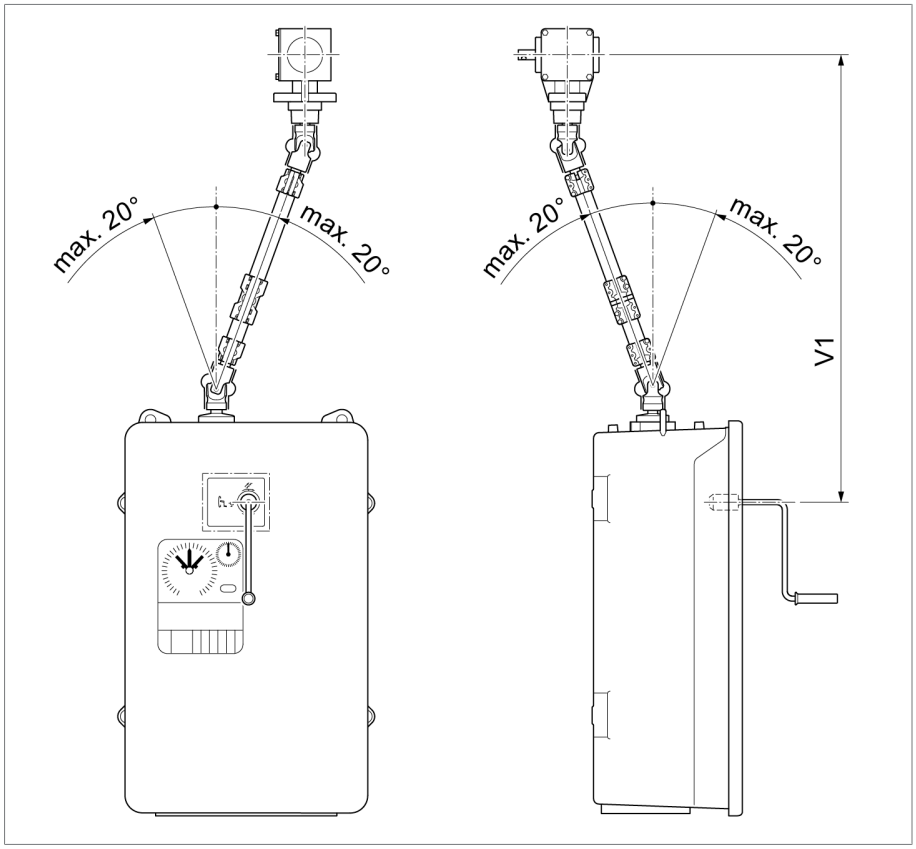

Figure 15: Drive shaft with cardan joints, with insulator (= special model)

Configuration	V 1 min [mm]	Intermediate bearing for [mm]
Middle of hand crank – middle of bevel gear (maximum permissible axial offset 20°)	978	V 1 > 2772

3.4 OF 100 Oil Filter Unit

The purpose of the OF 100 oil filter unit is to clean the on-load tap-changer's insulating fluid with the paper filter insert and to clean and dry the fluid with the combined filter insert.

For on-load tap-changers where the number of tap-change operations per year is higher than 15,000, we recommend the use of the OF 100 oil filter unit with paper filter insert. This can extend the intervals between maintenance.

For more information, consult the MR operating instructions "OF 100 oil filter unit".

You must use the OF 100 oil filter unit with combined filter insert for OILTAP® G on-load tap-changers where U_m>245 kV (insulated to ground).

4 Commissioning transformer at operating site

4.1 Filling the oil compartment of the on-load tap-changer with oil and bleeding it

NOTICE

Damage to the on-load tap-changer!

Unsuitable insulating fluids cause damage to the on-load tap-changer.

► Only use insulating fluids [►Section 8.1, Page 51] approved by the manufacturer.

Filling oil compartment with oil and bleeding it

1. ***NOTICE!*** Check whether the on-load tap-changer head cover has a flange for attaching a pressure relief device. If it does, operation without a pressure relief device is not permitted and may result in damage to the on-load tap-changer.

   ⇨ Fit a pressure relief device which is approved for this on-load tap-changer on the on-load tap-changer head.

2. Establish a connecting lead between the pipe connection E and one of the pipe connections R, S or Q to ensure uniform pressure conditions in the oil compartment and transformer during evacuation.

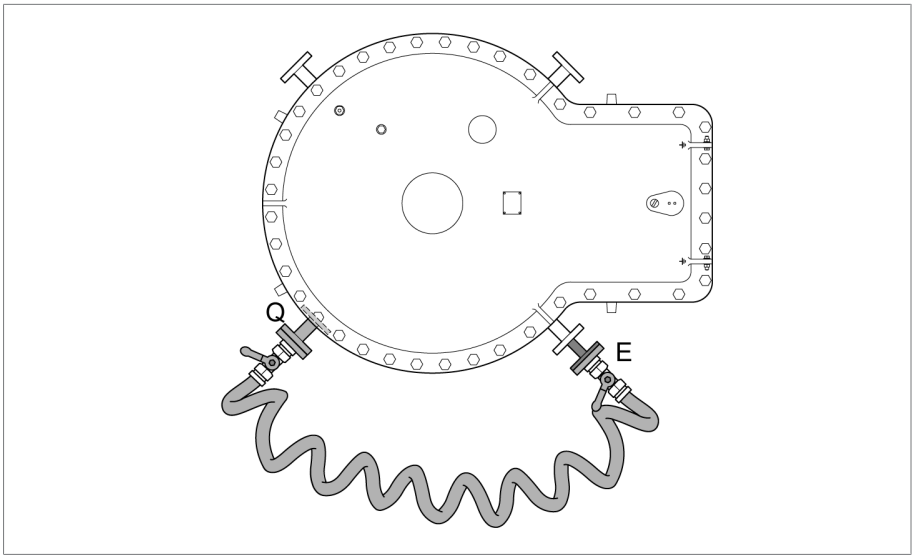

Figure 16: Connecting lead between E and Q

3. Perform an evacuation.
4. Fill the oil compartment completely with oil via the S pipe connection. During this process, the oil suction pipe is bled.
5. Drain the oil conservator until the minimum volume for switching gases and thermal expansion has been reached in accordance with the technical data for the OILTAP® G.

Removing the oil sample

1. Take oil sample from oil compartment.
2. Record temperature of oil sample just after sample is taken.
3. Determine dielectric strength and water content at a diverter switch oil temperature of 20 °C ± 5 °C. The dielectric strength and water content must comply with the limit values provided in the appendix [▶Section 8.5, Page 57].

4.2 Checking motor-drive unit

NOTICE

Damage to the on-load tap-changer / de-energized tap-changer!

Damage to the on-load tap-changer / de-energized tap-changer due to actuation of the on-load tap-changer / de-energized tap-changer without insulating fluid.

► Ensure that the selector / de-energized tap changer is fully immersed in insulating fluid and that the oil compartment of the on-load tap-changer is completely filled with insulating fluid.

NOTICE

Damage to the on-load tap-changer and motor-drive unit!

Damage to on-load tap-changer and motor-drive unit due to incorrect use of position transmitter equipment.

► Only circuits stated in the chapter Technical data for position transmitter equipment may be connected to the position transmitter module connections.

► The switchover point of the position transmitter equipment in the motor-drive unit is not the same as the switchover point of the diverter switch operation. This depends on the type of diverter switch. This fact should be noted when project planning the locking circuits between the motor-drive unit and external equipment (e.g. transformer circuit breaker).

► Therefore, the "Tap changer in operation" position transit contact shown in the connection diagram should be used for external monitoring, locking and control purposes instead of the position transmitter equipment.

Prior to commissioning the transformer, check whether the motor-drive unit and on-load tap-changer are correctly coupled and that the motor-drive unit functions correctly.

Tests on the motor-drive unit

1. Perform function checks as described in relevant MR operating instructions for motor-drive unit.
2. ***NOTICE!*** An incorrectly coupled motor-drive unit will lead to damage to the on-load tap-changer. Undertake trial tap-change operations across the entire range of settings. Ensure that in each operating position, the tap position indicators of motor-drive unit and on-load tap-changer (inspection window in the on-load tap-changer head) match.

Dielectric tests on transformer wiring

► Note information relating to dielectric tests on transformer wiring in relevant MR operating instructions for motor-drive unit.

Prior to commissioning the transformer, check whether the motor-drive unit is functioning correctly.

Tests on the motor-drive unit

► Perform function checks as described in relevant MR operating instructions for motor-drive unit.

Dielectric tests on transformer wiring

► Note information relating to dielectric tests on transformer wiring in relevant MR operating instructions for motor-drive unit.

4.3 Checking protective relay

4.3.1 Checking protective relay (RS 2001, 2001/V, 2001/H, 2001/E, 2001/5, 2001/R, 2001/T, 2003)

✓ Check that the protective relay is functioning correctly before commissioning the transformer:

1. Ground the transformer on the high-voltage side and low-voltage side. Ensure that the grounding for work connection on the transformer is not removed during testing.
2. Ensure that the transformer remains de-energized during testing.
3. Deactivate the automatic fire extinguishing device.
4. Loosen the three screws on the terminal box cover and lift off the terminal box cover.
5. Remove the slotted head screw for potential tie-in and remove the terminal box cover with wire.
6. Press OFF test button.
7. Leave the transformer's danger zone.
8. Ensure that the transformer's circuit breaker cannot be closed.

   ⇨ Passive protection test
9. Press OPERATION test button.
10. Leave the transformer's danger zone.
11. Close the transformer's circuit breaker with isolating switches open and the transformer grounded on all sides.
12. Press OFF test button.
13. Ensure that the transformer's circuit breaker is open.

    ⇨ Active protection test.
14. Press OPERATION test button to reset the protective relay.

15. Position the wire for the terminal box cover and affix using the slotted head screw.
16. Attach the terminal box cover and secure with screws.

4.3.2 Checking protective relay (RS 2004)

✓ Check that the protective relay is functioning correctly before commissioning the transformer:

1. Ensure that the flap valve is in the OPERATION position.
2. Leave the transformer's danger zone.
3. Close the transformer's circuit breaker with isolating switches open and the transformer grounded on all sides.
4. Press OFF test button.
5. Ensure that the transformer's circuit breaker is open.

   ⇨ Active protection test

4.4 Checking pressure monitoring device

1. Ground the transformer on the high-voltage side and low-voltage side. Ensure that the grounding for work connection on the transformer is not removed during testing.
2. Ensure that the transformer remains de-energized during testing.
3. Deactivate the automatic fire extinguishing device.
4. Remove the cover cap.
5. Activate the sensor on the snap-action switch.
   ⇨ Sensor is in the OFF position.
6. Leave the transformer's danger zone.
7. Ensure that the transformer's circuit breaker cannot be closed.
   ⇨ Passive protection test
8. Activate the sensor on the snap-action switch.
   ⇨ Sensor is in the OPERATION position.
9. Leave the transformer's danger zone.
10. Close the transformer's circuit breaker with isolating switches open and the transformer grounded on all sides.
11. Activate the sensor on the snap-action switch.
    ⇨ Sensor is in the OFF position.
12. Ensure that the transformer's circuit breaker is open.
    ⇨ Active protection test.
13. Activate the sensor on the snap-action switch to reset the pressure monitoring device.
    ⇨ Sensor is in the OPERATION position.
14. Secure the cover cap.

4.5 Commissioning the transformer

✓ The signaling contact for falling below the minimum insulating fluid fill level in the on-load tap-changer's oil conservator is looped into the tripping circuit of the circuit breaker.

✓ The protective relay and additional protective devices are looped into the circuit breaker's tripping circuit.

✓ The motor-drive unit and all protective devices are functioning correctly and are ready for use.

✓ The oil compartment of the on-load tap-changer is completely filled with insulation fluid.

✓ All stop-cocks between on-load tap-changer and oil conservator of the on-load tap-changer are open.

1. Switch on transformer.
2. ***NOTICE!*** Inrush current impulses can be significantly greater than the transformer rated current and may lead to current paths with asymmetrical or non-sinusoidal curve shapes and, as a result, overload the on-load tap-

changer during the diverter switch operation. Only perform tap-change operations - whether under no load or under load conditions - once the inrush current impulse has subsided.

5 Operation

5.1 Operating the motor-drive unit with the hand crank

⚠ WARNING

Danger of explosion!

Unauthorized operation of the motor-drive unit with the hand crank may result in death or serious injury.

- ► Never operate the motor-drive unit electrically or with the hand crank before the transformer has been disconnected if you think there may be a fault in the transformer or on-load tap-changer / de-energized tap-changer.
- ► Never use the hand crank to complete a tap-change operation that has begun electrically, but has not been ended completely.
- ► If the hand crank is difficult to move, you must stop using it.
- ► When operating the motor-drive unit with the hand crank, never reverse the direction of rotation.
- ► If there is any doubt about the on-load tap-changer / de-energized tap-changer being in proper working condition or about the cause of a fault in the motor-drive unit, contact the Technical Service department of Maschinenfabrik Reinhausen GmbH immediately.
- ► To operate the motor-drive unit manually, only use the hand crank mounted in the motor-drive unit.

For information about fault rectification, refer to the "Fault elimination" chapter.

Normal operation

During normal operation, there is no need to operate the unit with the hand crank. The hand crank is mainly required during installation and for tests in the transformer plant.

Use of the hand crank for operating the motor-drive unit is permitted if the transformer is disconnected, e.g. for maintenance tasks, if there is no detectable fault on the transformer or on-load tap-changer / de-energized tap-changer and the previous tap-change operation has been completed correctly.

Emergency operation exception

An operation is considered an emergency operation if a tap-change operation is absolutely necessary when a transformer is energized, despite a fault in the motor-drive unit. In this case, be sure to observe the warnings listed above.

Operating the motor-drive unit with the hand crank

To carry out a tap-change operation with the hand crank, proceed as follows:

1. Open the door of the protective housing for the motor-drive unit.
2. Switch off motor protective switch Q1 (position 0).
3. Insert the hand crank mounted in the motor-drive unit into the hand crank aperture in the upper cover plate.
   ⇨ The built-in hand crank interlock switch interrupts the motor circuit at two poles. The control circuit will not be interrupted.
4. ***NOTICE!*** Damage to the on-load tap-changer due to tap-change operation not being completed correctly. Turn the hand crank in one direction until the pointer has fully circled the tap-change indicator once and is again in the mid-position of the area marked in gray on the tap-change indicator.
   ⇨ The tap-change operation is complete.
5. Remove the hand crank and return it to the mounting bracket.
6. Switch on motor protective switch Q1 (position I).
7. Close the door of the protective housing for the motor-drive unit.

6 Fault elimination

⚠ WARNING

Danger of explosion!

Explosive gases under the on-load tap-changer head cover can deflagrate or explode and result in severe injury or death.

- ► Ensure that there are no ignition sources such as open flames, hot surfaces or sparks (e.g. caused by the build-up of static charge) in the immediate surroundings and that none occur.
- ► De-energize all auxiliary circuits (for example tap-change supervisory device, pressure relief device, pressure monitoring device) before removing the on-load tap-changer head cover.
- ► Do not operate any electrical devices during the work (e.g. risk of sparks from impact wrench).

NOTICE

Damage to the on-load tap-changer and transformer!

If the protective relay or other protective devices trip, this can indicate damage to the on-load tap-changer and transformer. The transformer must not be energized without being inspected first.

- ► Check on-load tap-changer and transformer when protective relay or other protective devices have been tripped.
- ► Do not use the equipment again until you are sure there is no damage to the on-load tap-changer or transformer.

NOTICE

Damage to motor-drive unit!

Damage to the motor-drive unit due to condensate in protective housing of motor-drive unit.

- ► Always keep protective housing of the motor-drive unit tightly closed.
- ► In the event of operation interruptions of more than 2 weeks, connect and operate the anti-condensation heater in the motor-drive unit. If this is not possible, e.g. during transportation, place a sufficient amount of desiccant in the protective housing.

The table below is intended to assist with detecting and, where possible, remedying faults.

For more information, please consult the operating instructions for the protective relay or the relevant protective device.

In the event of faults on the on-load tap-changer and motor-drive unit which cannot be easily corrected on site, or if the protective relay or additional protective devices have been tripped, please inform your authorized MR representative, the transformer manufacturer or contact MR directly.

Maschinenfabrik Reinhausen GmbH
Technical Service
Postfach 12 03 60
93025 Regensburg

Germany
Phone: +49 94140 90-0
Fax: +49 9 41 40 90-7001
E-mail: service@reinhausen.com
Internet: www.reinhausen.com

Fault description	Action
Tripping of protective relay	See "Tripping the protective relay and re-commissioning the transformer" Also contact MR.
Tripping of pressure relief device (e.g. MPreC®)	On-load tap-changer and transformer must be checked. Depending on the cause of tripping, take measurements / carry out checks on the transformer. Contact MR to check the on-load tap-changer.
Tripping of pressure monitoring device (e.g. DW 2000)	See "Tripping the pressure monitoring device and putting the transformer back into operation" Also contact MR.
Activation of tap-change supervisory device	The motor-drive unit can no longer be electrically actuated once the tap-change supervisory device has been activated. Manual operation of the motor-drive unit via the hand crank when the transformer is switched on is prohibited. On-load tap-changer and transformer must be checked. Depending on the cause of tripping, take measurements / carry out checks on the transformer. Contact MR to check the on-load tap-changer.
Activation of rupture disk in on-load tap-changer head cover	On-load tap-changer and transformer must be checked. Depending on the cause of tripping, take measurements / carry out checks on the transformer. Contact MR to check the on-load tap-changer.
Tripping of motor protective switch in motor-drive unit	See chapter "Fault elimination" in the operating instructions of the TAPMOTION® ED motor-drive unit
Tripping of signaling contact that indicates that the fill level of the insulating fluid has fallen below the minimum in the on-load tap-changer oil conservator	Check pipe system (pipes etc.) and on-load tap-changer head for leaks. Check the fill level and the quality of the insulating fluid in the oil compartment in accordance with the operating instructions for the on-load tap-changer. If the fill level has fallen below the limit values, also contact MR.
On-load tap-changer not changing tap position (sluggishness, Raise keys / Lower keys not working, no audible diverter switch action)	Contact MR.
No change in voltage on transformer despite change in position on motor-drive unit	Contact MR.
Tap position indicator on motor-drive unit and on-load tap-changer different	Contact MR.
Noises on drive shaft or motor-drive unit when changing tap position	Ensure proper mounting of the drive shaft in accordance with its operating instructions. Check that hose clips and protective covers are seated correctly. Contact MR in the event of noise from the motor-drive unit.

Fault description	Action
Red message on monitoring unit	If possible read out database and send to MR along with error code.
Warning or tripping of Buchholz relay on transformer	Notify manufacturer of transformer.
Deviation from desired value when measuring winding resistance of transformer	Contact manufacturer of transformer and, if necessary, MR, and provide measured values.
Deviation from desired value during dissolved gas analysis (transformer oil)	Contact manufacturer of transformer and, if necessary, MR, and provide measured values.
Deviation from desired value during transformer ratio test	Contact manufacturer of transformer and, if necessary, MR, and provide measured values.
Deviation from limit value for insulating fluids	Carry out insulating fluid change, check oil conservator breather of on-load tap-changer.

Table 4: Fault elimination

6.1 Tripping the protective relay and re-commissioning the transformer

⚠ WARNING

Danger of explosion!

Explosive gases in the protective relay can deflagrate or explode and result in severe injury or death.

- ► Wait 15 minutes after switching off the transformer before beginning further work on the protective relay so that the gases can dissipate.
- ► Ensure that there are no ignition sources such as naked flames, hot surfaces or sparks (e.g. caused by the build-up of static charge) in the immediate surroundings and that none occur.
- ► De-energize all auxiliary circuits before beginning work.
- ► Do not operate any electrical devices during the work (e.g. risk of sparks from impact wrench).

⚠ WARNING

Danger of death or severe injury!

Danger of severe injury or death if on-load tap-changer and transformer are insufficiently tested.

- ► Be sure to contact Maschinenfabrik Reinhausen to check on-load tap-changer and transformer if the protective relay has tripped.
- ► Only use the equipment again when you are sure there is no damage to the on-load tap-changer or transformer.

When the circuit breakers have been tripped by the protective relay, proceed as follows:

1. Establish time of tripping.
2. Determine operating position of on-load tap-changer.
3. As a precaution, block the motor-drive unit by tripping the motor protective switch to prevent the on-load tap-changer from being actuated by remote control.

4. Check the on-load tap-changer head cover. If insulating fluid is leaking, close the oil conservator stop valve immediately.
5. Check whether the flap valve of the protective relay is in the OFF or OPERATION position.

6.1.1 Flap valve in OPERATION position

If the flap valve is in the OPERATION position, there may be a fault in the tripping circuit. Check the tripping circuit in this case. If you are not able to clarify why the protective relay tripped, be sure to contact Maschinenfabrik Reinhausen to check the on-load tap-changer.

6.1.2 Flap valve in OFF position

Note that protective relay RS 2004 features an automatic reset mechanism which means that the flap valve does not remain in the OFF position after tripping. If the protective relay RS 2004 has not tripped due to an error in the tripping circuit, also proceed as described below for RS 2004.

If the flap valve is in the OFF position, proceed as follows:

1. Ensure that the transformer is not started up under any circumstances.
2. Contact and inform Maschinenfabrik Reinhausen of the following:
   - ⇨ Serial number of protective relay and on-load tap-changer
   - ⇨ What was the load of the transformer at the instant of tripping?
   - ⇨ Was the on-load tap-changer moved immediately before or during tripping?
   - ⇨ Did any other protective devices of the transformer respond at the instant of tripping?
   - ⇨ Were switching operations in the network being carried out at the instant of tripping?
   - ⇨ Were overvoltages registered at the instant of tripping?
3. Take further action in agreement with Maschinenfabrik Reinhausen.

6.1.3 Re-commissioning the transformer

Once the reason for the protective relay tripping has been established and remedied, you can re-commission the transformer:

1. Check the protective relay [▶Section 4.3.1, Page 33].
2. Commission the transformer.

6.2 Tripping the pressure monitoring device and putting the transformer back into operation

⚠ WARNING

Danger of death or severe injury!

Danger of severe injury or death if on-load tap-changer and transformer are insufficiently tested.

► Be sure to contact Maschinenfabrik Reinhausen to check on-load tap-changer and transformer after the pressure monitoring device has been tripped.

► Only use the equipment again when you are sure there is no damage to the on-load tap-changer or transformer.

If the circuit breaker is tripped by the pressure monitoring device, proceed as follows:

1. Establish time of tripping.
2. Determine operating position of on-load tap-changer.
3. As a precaution, block the motor-drive unit by tripping the motor protective switch to prevent the on-load tap-changer from being actuated by remote control.
4. Check the on-load tap-changer head cover. If insulating fluid is leaking, close the oil conservator stop valve immediately.
5. Check whether the pressure monitoring device sensor is in the OFF position or OPERATION position.

6.2.1 Sensor in the OPERATION position

If the sensor is in the OPERATION position, there may be an error in the tripping circuit. Check the tripping circuit in this case. If you are not able to clarify why the pressure monitoring device tripped, be sure to contact Maschinenfabrik Reinhausen to check the on-load tap-changer.

6.2.2 Sensor in the OFF position

Proceed as follows if the sensor is in the OFF position.

1. Ensure that the transformer is not started up under any circumstances.
2. Contact and inform Maschinenfabrik Reinhausen of the following:
   - ⇨ What was the load of the transformer at the instant of tripping?
   - ⇨ Was there a tap-change operation on the on-load tap-changer immediately before or during the tripping?
   - ⇨ Did any other protective devices of the transformer respond at the instant of tripping?
   - ⇨ Were switching operations in the network being carried out at the instant of tripping?
   - ⇨ Were overvoltages registered at the instant of tripping?
   - ⇨ How high is the static pressure on the pressure relief device (height difference between the oil level in the on-load tap-changer oil conservator and the pressure relief device)?
3. Take further action in agreement with Maschinenfabrik Reinhausen.

6.2.3 Re-commissioning the transformer

You can re-commission the transformer once the cause for tripping the pressure monitoring device has been determined and resolved:

1. Ensure that the sensor on the snap-action switch is in the OPERATION position.
2. Commission the transformer.

7 Maintenance

⚠ DANGER

Electric shock!

An energized transformer could cause death or serious injuries.

► Switch off transformer on high and low-voltage side.

► Lock transformer to prevent unintentional restart.

► Ensure that everything is de-energized.

► Visibly connect all transformer terminals to ground (grounding leads, grounding disconnectors) and short circuit them.

► Cover or cordon off adjacent energized parts.

⚠ DANGER

Electric shock!

Working on the on-load tap-changer when on-load tap-changer components are energized can lead to death or serious injuries.

► De-energize all auxiliary circuits, such as the tap-change supervisory device, pressure relief device, pressure monitoring device.

► Make sure that everything is de-energized.

⚠ WARNING

Danger of explosion!

Explosive gases in the oil compartment of the on-load tap-changer, transformer, pipe system, oil conservator and at the dehydrating breather opening can deflagrate or explode and result in severe injury or death.

► Ensure that there are no ignition sources such as naked flames, hot surfaces or sparks (e.g. caused by the build-up of static charge) in the transformer's immediate surroundings and that none occur.

► Do not operate any electrical devices (e.g. risk of sparks from impact wrench).

► Only use conductive and grounded hoses, pipes, and pump equipment that are approved for flammable liquids.

NOTICE

Damage to motor-drive unit!

Damage to the motor-drive unit due to condensate in protective housing of motor-drive unit.

► Always keep protective housing of the motor-drive unit tightly closed.

► In the event of operation interruptions of more than 2 weeks, connect and operate the anti-condensation heater in the motor-drive unit. If this is not possible, e.g. during transportation, place a sufficient amount of desiccant in the protective housing.

7.1 Inspection

Monitoring the on-load tap-changer and motor-drive unit/control cabinet is limited to occasional visual checks and monitoring the quality of the insulating fluid. For efficiency reasons these visual inspections can be combined with the usual checks on the transformer.

Interval	Action
Annually	Check the door seal, cable bushings, and ventilation of the motor-drive unit/control cabinet housing.
Annually	Check the sealing points of the on-load tap-changer head, the protective relay, and the connected pipes.
Annually	Check the correct function of the installed electrical heater in the motor-drive unit/control cabinet housing.
Annually	Check the correct function of the protective relay [►Section 4.3, Page 33].
Annually	Check the perfect condition of the breather (silica gel) for the on-load tap-changer oil conservator.
Every 2 years	Check the quality of the insulating fluid of on-load tap-changers that are installed in positions other than the neutral point of windings (Class 2 in accordance with ICE 60214-1). 1. Take a sample of insulating fluid from the oil compartment. 2. Record the temperature of the sample (insulating fluid) immediately after the sample is taken. 3. Determine the dielectric strength and water content at an insulating fluid temperature of 20°C ±5°C. The dielectric strength and water content must comply with the limit values specified in the technical data. 4. If the limit values are not complied with, change the insulating fluid in accordance with the "Changing the insulating fluid" section.
Every 7 years	Check the quality of the insulating fluid of on-load tap-changers that are installed at the neutral point of windings (Class 1 in accordance with IEC 60214-1). 1. Take a sample of insulating fluid from the oil compartment. 2. Record the temperature of the sample (insulating fluid) immediately after the sample is taken. 3. Determine the dielectric strength and water content at an insulating fluid temperature of 20°C ±5°C. The dielectric strength and water content must comply with the limit values specified in the technical data. 4. If the limit values are not complied with, change the insulating fluid in accordance with the "Changing the insulating fluid" section.

Table 5: Inspection plan

7.2 Maintenance intervals

Maintenance intervals without MR monitoring system

⚠ WARNING

Danger of explosion!

If pending maintenance work is not carried out immediately, this may lead to death or serious injury as a result of a progressive short circuit, for example.

► Adherence to the following maintenance intervals is mandatory.

If you are operating the on-load tap-changer without an MR monitoring system, the following maintenance intervals shall apply.

Maintenance intervals of the selector

After 1 million tap-change operations (motor-drive unit counter reading), contact Maschinenfabrik Reinhausen Technical Service.

Maintenance intervals of diverter switch insert

The diverter switch insert must be replaced after 800,000 tap change operations.

Maintenance intervals for on-load tap-changers which are used as follows:

- in neutral point application
- in auto transformers with Um < 245 kV
- in winding with delta connection with Um < 245 kV
- for regulation at the transformer's winding line end with Um < 245 kV

First maintenance After every 7 years, or after the number of tap-change operations stated in the following table, whichever is reached first.

Further maintenance After every 7 years, or after the number of tap-change operations stated in the following table, whichever is reached first.

On-load tap-changer	Rated transformer current	Number of tap-change operations	
		Without MR oil filter unit	With MR oil filter unit
G III 1602	Up to 1600 A	30 000	60 000
G III 2002	Up to 2000 A	20 000	40 000
G I 1602, G I 1612, G I 1622	Up to 1600 A	30 000	60 000
G I 3002, G I 3022	Up to 3000 A	20 000	40 000

Table 6: Maintenance intervals

Maintenance intervals for on-load tap-changers which are used as follows:

- in auto transformers with Um ≥ 245 kV
- in winding with delta connection with Um ≥ 245 kV
- for regulation at the transformer's winding line end with Um ≥ 245 kV

First maintenance After 2 years or 10,000 tap-change operations, whichever is reached first.

Further maintenance After every 4 years, or after the number of tap-change operations stated in the following table, whichever is reached first.

On-load tap-changer	Rated transformer current	Number of tap-change operations	
		Without MR oil filter unit	With MR oil filter unit
G III 1602	Up to 1600 A	15 000	30 000
G III 2002	Up to 2000 A	10 000	20 000
G I 1602, G I 1612, G I 1622	Up to 1600 A	15 000	30 000
G I 3002, G I 3022	Up to 3000 A	10 000	20 000

Table 7: Maintenance intervals

A label on the inside of the door of the TAPMOTION® ED motor-drive unit also specifies the relevant maintenance interval.

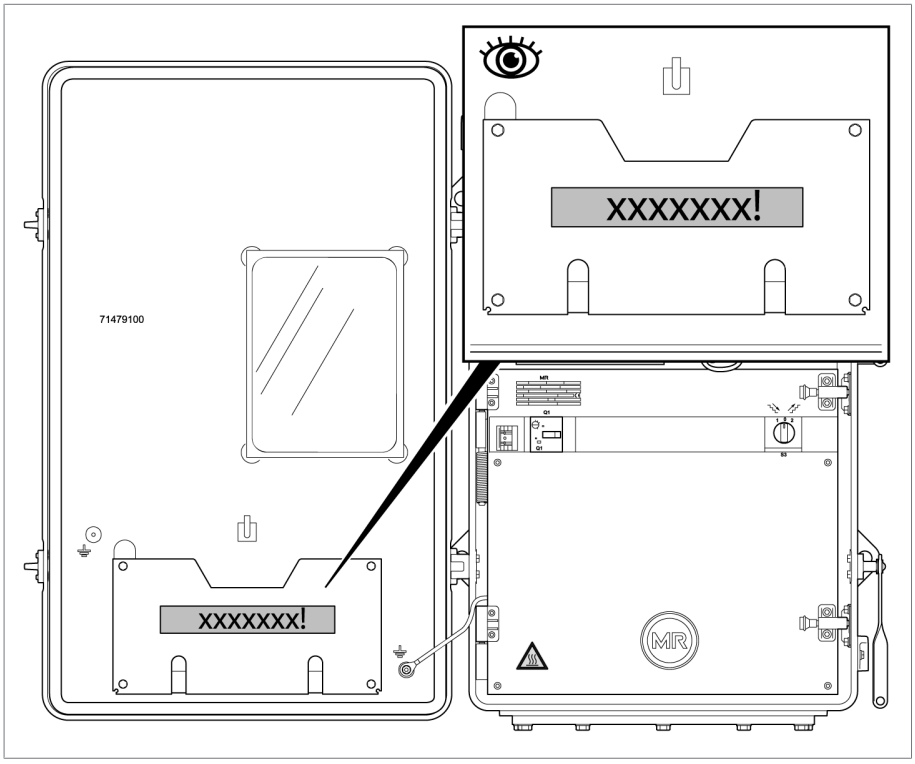

Figure 17: Label showing maintenance intervals

Maintenance intervals with MR monitoring system

⚠ WARNING

Danger of explosion!

If pending maintenance work is not carried out immediately, this may lead to death or serious injury as a result of a progressive short circuit, for example.

- ► Contact the Maschinenfabrik Reinhausen GmbH Technical Service department as soon as the MR monitoring system issues a maintenance warning.
- ► In the event of failure or shutdown of the MR monitoring system, observe the maintenance intervals as specified in the maintenance plan without the MR monitoring system.

If you are operating the on-load tap-changer with an MR monitoring system, the maintenance intervals displayed by the MR monitoring system shall apply.

More information can be found in the operating instructions for the MR monitoring system.

7.3 Oil change

NOTICE

Damage to the on-load tap-changer!

Unsuitable insulating fluids cause damage to the on-load tap-changer.

- ► Only use insulating fluids [►Section 8.1, Page 51] approved by the manufacturer.
- ► Ensure that the new insulating fluid has the same chemical, mechanical, thermal and electrical properties. Otherwise, contact Maschinenfabrik Reinhausen GmbH's Technical Service department.

The dielectric strength and water content of the insulating fluid must be determined after filling. Proceed as follows:

1. Take an insulating fluid sample from the oil compartment.
2. Record the temperature of the sample immediately after the sample is taken.
3. Determine dielectric strength and water content at a diverter switch oil temperature of 20 °C ± 5 °C. The dielectric strength and water content must comply with the limit values [►Section 8.5, Page 57] specified in the technical data.

7.4 Performing DC resistance measurement on transformer

The measured DC current is normally restricted to 10% of the rated current of the measured transformer winding in order to prevent the winding from overheating.

Perform the DC resistance measurement in various on-load tap-changer operating positions. You need to distinguish here whether the measured current is interrupted when changing operating position or not.

Status of oil compartment	Without interruption in measured current	With interruption (measured current = 0 A before change of operating position)
Oil compartment empty	Maximum 10 A DC	Maximum 50 A DC
Oil compartment filled with insulating fluid	Maximum 50 A DC	Maximum 50 A DC

Table 8: Maximum permitted measured currents when performing DC resistance measurement on transformer

8 Technical data

An overview of all key technical data for the on-load tap-changer and motor-drive unit exists in the form of separate documents, which are available on request.

8.1 Permissible ambient conditions

Air temperature during operation	-25°C…+50°C
Temperature of the insulating fluid in operation	-25°C…+105°C (up to +115°C when the transformer is in emergency operation)
Transport temperature, storage temperature	-40°C…+50°C
Drying temperatures	See installation and commissioning instructions, "Mounting" chapter
Compressive strength	See technical data TD 61 – General section
Insulating fluid	▪ Unused insulating oils derived from petroleum products[1)] in accordance with IEC60296 and ASTM D3487 (equivalent standards on request) ▪ Unused insulating oils derived from other virgin hydrocarbons in accordance with IEC60296, or blends of these oils with petroleum products[1)] in accordance with IEC60296, ASTM D3487 or equivalent standards on request ▪ Alternative insulating fluids, such as natural and synthetic esters or silicone oils, on request. [1)] Gas-to-liquid oils (GTL oils) are understood in this context as petroleum products
Installation height of the oil conservator	See technical data TD 61 – General section
Installation height above sea level	See technical data TD 61 – General section

Table 9: Permissible ambient conditions

8.2 Technical data for protective relay

The technical data for the protective relay RS 2001 is listed in the following. In accordance with DIN EN 60255-1, operational accuracy = base accuracy

Housing	Outdoor model
Degree of protection	IP66
Relay actuation	Flap valve with aperture
Weight	approx. 3.5 kg
Oil flow speed of available types when tripping (oil temperature 20 °C)	0.65 ± 0.15 m/s 1.20 ± 0.20 m/s 3.00 ± 0.40 m/s 4.80 ± 0.60 m/s

Table 10: General technical data

Tripping circuit

The protective relay can be supplied with either a normally open (NO) or a normally closed (NC) dry-reed magnetic switch (see dimensional drawing supplied). Other contact combinations are available as a special version.

Electrical data for normally closed (NC) dry-reed magnetic switch

Electrical data	
DC switching capacity	1.2 W…200 W
AC switching capacity (50 Hz)	1.2 VA…400 VA
Switching voltage AC/DC	24 V…250 V
Switched current AC/DC	4.8 mA…2 A

Table 11: Electrical data

Switching capacity (switching load on an off)	
Minimum switched current AC/DC (lowest voltage)	50 mA (at 24 V)
Minimum switched current AC/DC (highest voltage)	4.8 mA (at 250 V)
Maximum switched current DC (highest current)	1.6 A (at 125 V with L/R = 40 ms)
Maximum switched current DC (highest voltage)	0.9 A (at 250 V with L/R = 40 ms)
Maximum switched current AC (highest current)	2 A (at 125 V with cos φ = 0.6)
Maximum switched current AC (highest voltage)	1.6 A (at 250 V with cos φ = 0.6)
Switching operations	1,000 cycles

Table 12: Switching capacity (switching load on an off)

Dielectric strength	
AC dielectric strength between all voltage-carrying connections and the grounded parts	2,500 V, 50 Hz, test duration 1 minute
AC dielectric strength between the opened contacts	2,000 V, 50 Hz, test duration 1 minute

Table 13: Dielectric strength

Electrical data for normally open (NO) dry-reed magnetic switch

Electrical data	
DC switching capacity	1.2 W…250 W
AC switching capacity (50 Hz)	1.2 VA…400 VA
Switching voltage AC/DC	24 V…250 V
Switched current AC/DC	4.8 mA…2 A

Table 14: Electrical data

Switching capacity (switching load on an off)	
Minimum switched current AC/DC (lowest voltage)	50 mA (at 24 V)
Minimum switched current AC/DC (highest voltage)	4.8 mA (at 250 V)
Maximum switched current DC (highest current)	2 A (at 125 V with L/R = 40 ms)
Maximum switched current DC (highest voltage)	1 A (at 250 V with L/R = 40 ms)
Maximum switched current AC (highest current)	2 A (at 125 V with cos φ = 0.6)
Maximum switched current AC (highest voltage)	1.6 A (at 250 V with cos φ = 0.6)
Switching operations	1,000 cycles

Table 15: Switching capacity (switching load on an off)

Dielectric strength	
AC dielectric strength between all voltage-carrying connections and the grounded parts	2,500 V, 50 Hz, test duration 1 minute
AC dielectric strength between the opened contacts	2,000 V, 50 Hz, test duration 1 minute

Table 16: **Dielectric strength**

Ambient conditions

Ambient temperature Ta	-40°C…+50°C
Oil temperature	<130 °C
Air pressure	Corresponds to 0 m…4,000 m above sea level

Table 17: Ambient conditions

8.3 Special models of protective relay

8.3.1 Protective relay with CO change-over contact as tripping switch

The protective relay can be supplied with a dry-reed magnetic switch, CO change-over (variant 3) (see dimensional drawing supplied).

Electrical data for CO change-over dry-reed magnetic switch

Electrical data	
DC switching capacity	1.2 W…150 W
AC switching capacity (50 Hz)	1.2 VA…200 VA
Switching voltage AC/DC	24 V…250 V
Switched current AC/DC	4.8 mA…1 A

Table 18: Electrical data

Switching capacity (switching load on an off)	
Minimum switched current AC/DC (lowest voltage)	50 mA (at 24 V)
Minimum switched current AC/DC (highest voltage)	4.8 mA (at 250 V)
Maximum switched current DC (highest current)	1.0 A (at 150 V with L/R = 40 ms)
Maximum switched current DC (highest voltage)	0.6 A (at 250 V with L/R = 40 ms)
Maximum switched current AC (highest current)	1 A (at 200 V with cos φ = 0.6)
Maximum switched current AC (highest voltage)	0.8 A (at 250 V with cos φ = 0.6)
Switching operations	1,000 cycles

Table 19: **Switching capacity (switching load on an off)**

Dielectric strength	
AC dielectric strength between all voltage-carrying connections and the grounded parts	2,500 V, 50 Hz, test duration 1 minute
AC dielectric strength between the opened contacts	1,150 V, 50 Hz, test duration 1 minute

Table 20: Dielectric strength

8.3.2 Protective relay with several dry-reed magnetic switches

The protective relay can be supplied with several independent dry-reed magnetic switches. These can be designed as normally open (NO) or normally closed (NC) contacts and are electrically isolated (see dimensional drawing supplied).

Electrical data for normally open (NO) and normally closed (NC) dry-reed magnetic switch

8.4 Technical data for pressure monitoring device

General technical data

Setup	Outdoor model
Ambient temperature	-40 °C…+80 °C (mechanical)
Cable gland	M25x1.5
Degree of protection	IP55 in accordance with IEC 60529 (enclosed device)
Relay actuation	Corrugated tubing with counter-pressure spring
Oil temperature	-40 °C…+100 °C
Weight	approx. 1.2 kg
Equipment	For standard insulating fluids (IEC60296 and IEC60422)
Sealing material (oil – air)	VITON
Permitted pressure range (absolute pressure)	1 bar…6 bar, vacuum not permitted
Upper switching pressure	3.8 ± 0.2 bar (trip pressure)
Lower switching pressure	2,8 ± 0,2 bar
Snap-action switch	
Connection terminals	Lead connection: 1 or 2 leads per terminal (Ø 0.75…2.5 mm²)
Contacts	1xNO (normally open), 1xNC (normally closed)
Utilization category	IEC 60947-5-1: AC 15: 230 V/1 A DC 13: 60 V/0.5 A
Maximum continuous current	10 A
Rated insulation voltage	AC: 2.5 kV/min

Table 21: General technical data

8.5 Limit values for dielectric strength and water content of insulating fluids

The following tables provide the limit values for dielectric strength (measured in accordance with IEC 60156) and water content (measured in accordance with IEC 60814) of insulating fluids for OILTAP® on-load tap-changers. The values have been established on the basis of IEC 60422.

In operation	U_d	H_2O
When commissioning the transformer for the first time	> 60 kV/2.5 mm	< 12 ppm
During operation	> 30 kV/2.5 mm	< 40 ppm
After maintenance	> 50 kV/2.5 mm	< 15 ppm

Table 22: Limit values for insulating fluids for neutral point applications

In operation	U_d	H_2O
When commissioning the transformer for the first time	> 60 kV/2.5 mm	< 12 ppm
During operation	> 40 kV/2.5 mm	< 30 ppm
After maintenance	> 50 kV/2.5 mm	< 15 ppm

Table 23: Limit values for insulating fluids for non-neutral point applications

9 Drawings

9.1 OILTAP® G, installation drawing (894641)

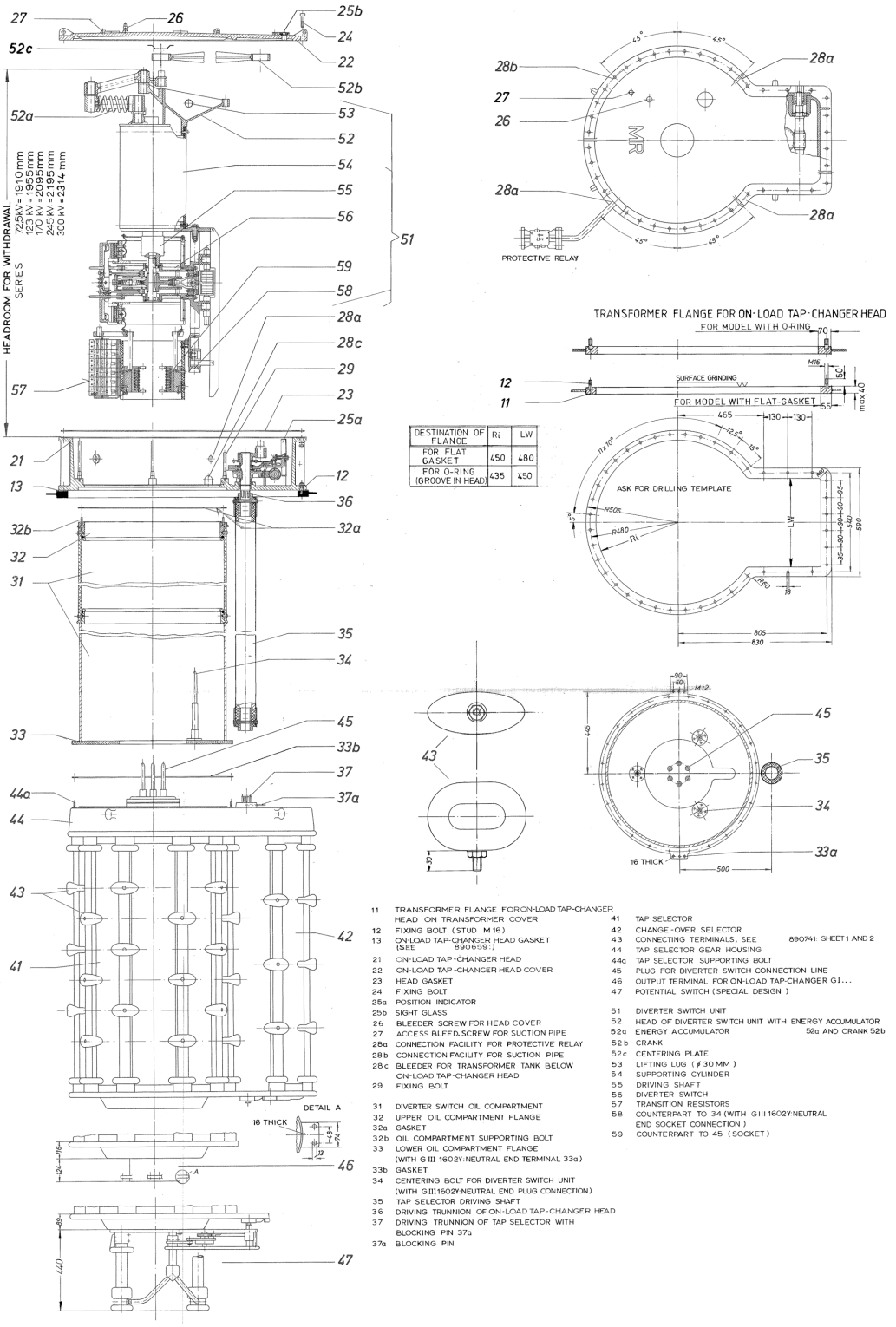

11 TRANSFORMER FLANGE FOR ON-LOAD TAP-CHANGER HEAD ON TRANSFORMER COVER
12 FIXING BOLT (STUD M 16)
13 ON-LOAD TAP-CHANGER HEAD GASKET (SEE 890659)
21 ON-LOAD TAP-CHANGER HEAD
22 ON-LOAD TAP-CHANGER HEAD COVER
23 HEAD GASKET
24 FIXING BOLT
25a POSITION INDICATOR
25b SIGHT GLASS
26 BLEEDER SCREW FOR HEAD COVER
27 ACCESS BLEED. SCREW FOR SUCTION PIPE
28a CONNECTION FACILITY FOR PROTECTIVE RELAY
28b CONNECTION FACILITY FOR SUCTION PIPE
28c BLEEDER FOR TRANSFORMER TANK BELOW ON-LOAD TAP-CHANGER HEAD
29 FIXING BOLT
31 DIVERTER SWITCH OIL COMPARTMENT
32 UPPER OIL COMPARTMENT FLANGE
32a GASKET
32b OIL COMPARTMENT SUPPORTING BOLT
33 LOWER OIL COMPARTMENT FLANGE (WITH G III 1602Y-NEUTRAL END TERMINAL 33a)
33b GASKET
34 CENTERING BOLT FOR DIVERTER SWITCH UNIT (WITH G III 1602Y-NEUTRAL END PLUG CONNECTION)
35 TAP SELECTOR DRIVING SHAFT
36 DRIVING TRUNNION OF ON-LOAD TAP-CHANGER HEAD
37 DRIVING TRUNNION OF TAP SELECTOR WITH BLOCKING PIN 37a
37a BLOCKING PIN
41 TAP SELECTOR
42 CHANGE-OVER SELECTOR
43 CONNECTING TERMINALS, SEE 890741: SHEET 1 AND 2
44 TAP SELECTOR GEAR HOUSING
44a TAP SELECTOR SUPPORTING BOLT
45 PLUG FOR DIVERTER SWITCH CONNECTION LINE
46 OUTPUT TERMINAL FOR ON-LOAD TAP-CHANGER GI...
47 POTENTIAL SWITCH (SPECIAL DESIGN)
51 DIVERTER SWITCH UNIT
52 HEAD OF DIVERTER SWITCH UNIT WITH ENERGY ACCUMULATOR
52a ENERGY ACCUMULATOR 52a AND CRANK 52b
52b CRANK
52c CENTERING PLATE
53 LIFTING LUG (⌀ 30 MM)
54 SUPPORTING CYLINDER
55 DRIVING SHAFT
56 DIVERTER SWITCH
57 TRANSITION RESISTORS
58 COUNTERPART TO 34 (WITH G III 1602Y-NEUTRAL END SOCKET CONNECTION)
59 COUNTERPART TO 45 (SOCKET)

9.2 On-load tap-changer head (890716)

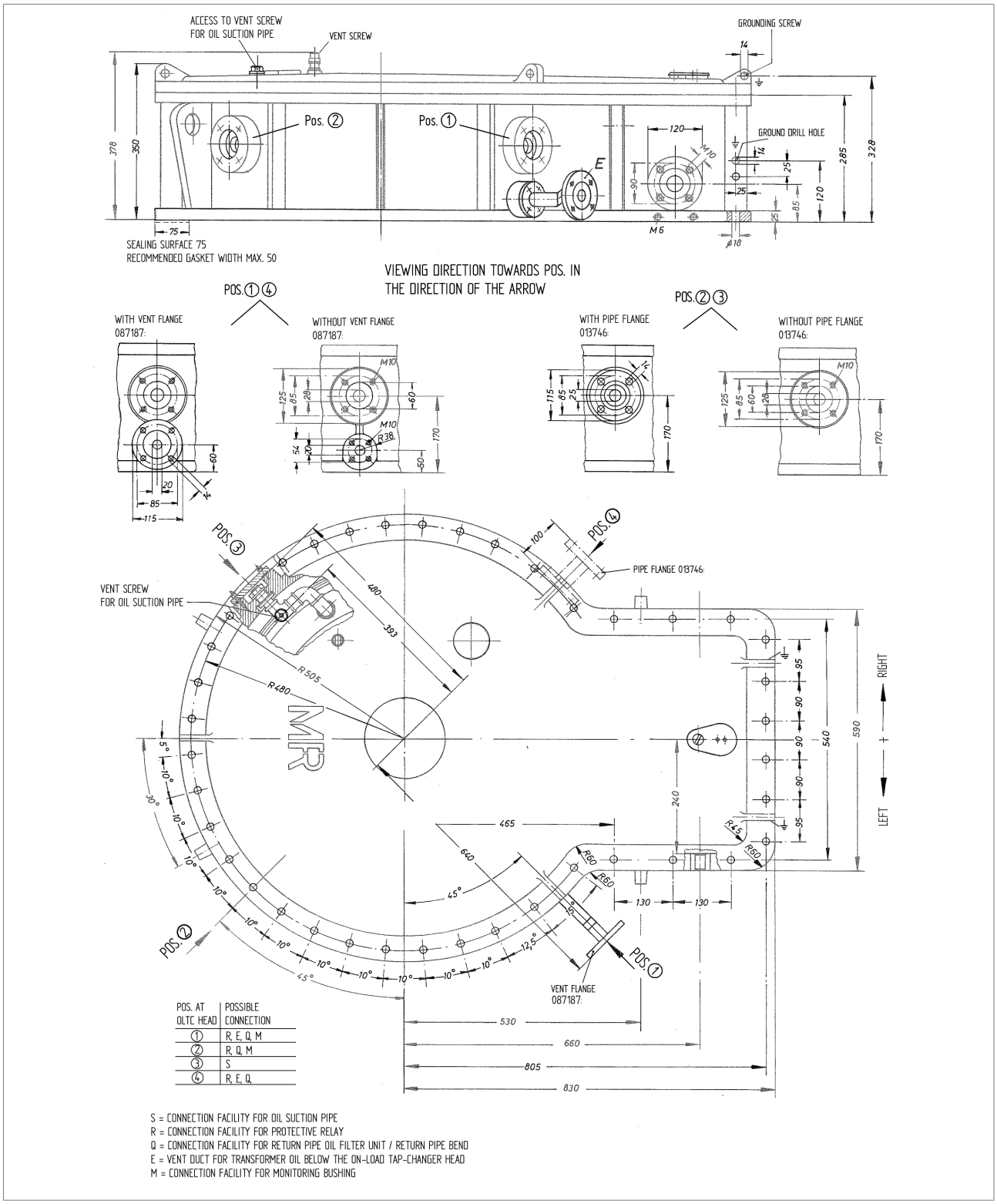

9.3 Special design for bell-type tank installation (890659)

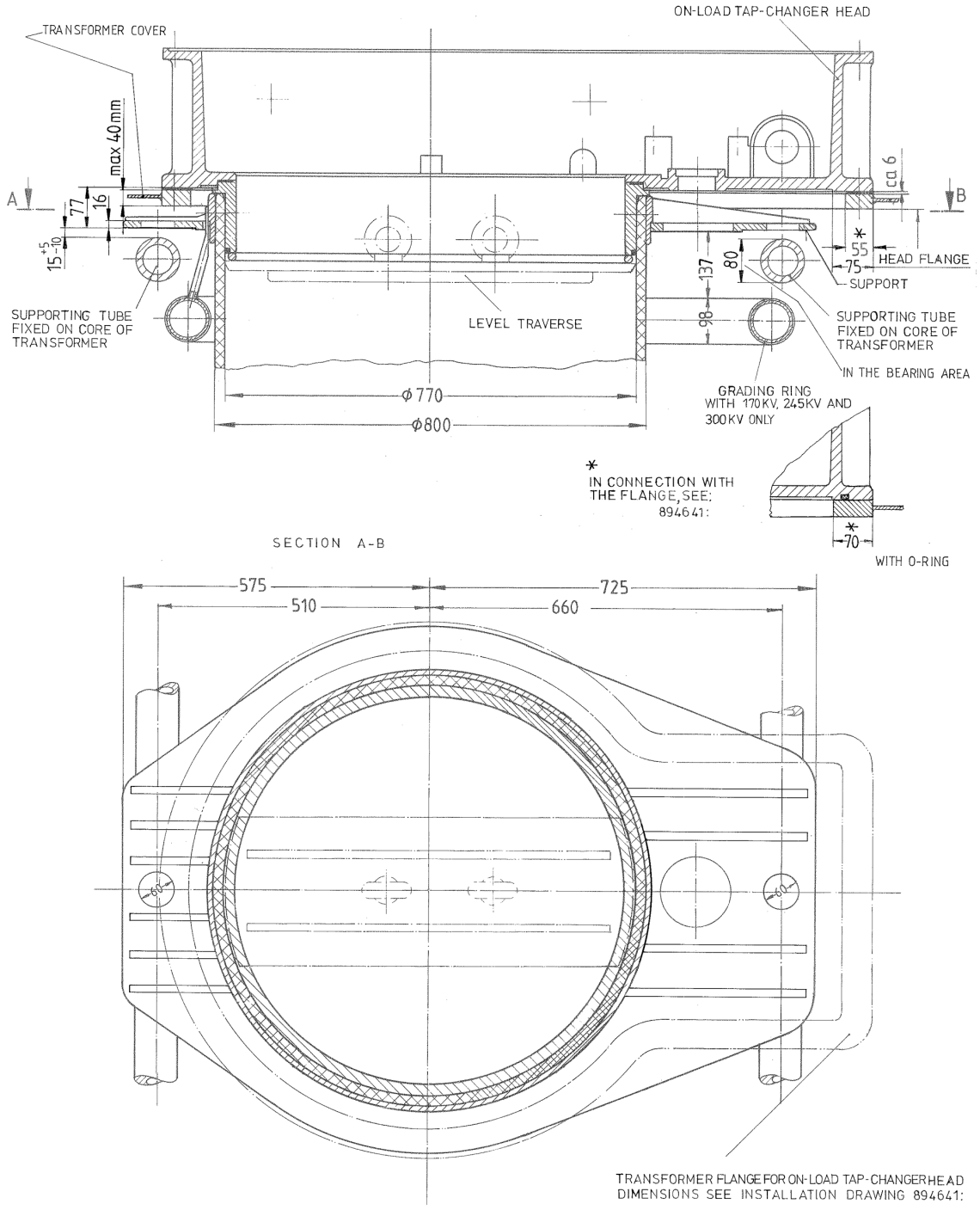

9.4 Lifting cross for installing and removing the diverter switch insert (890442)

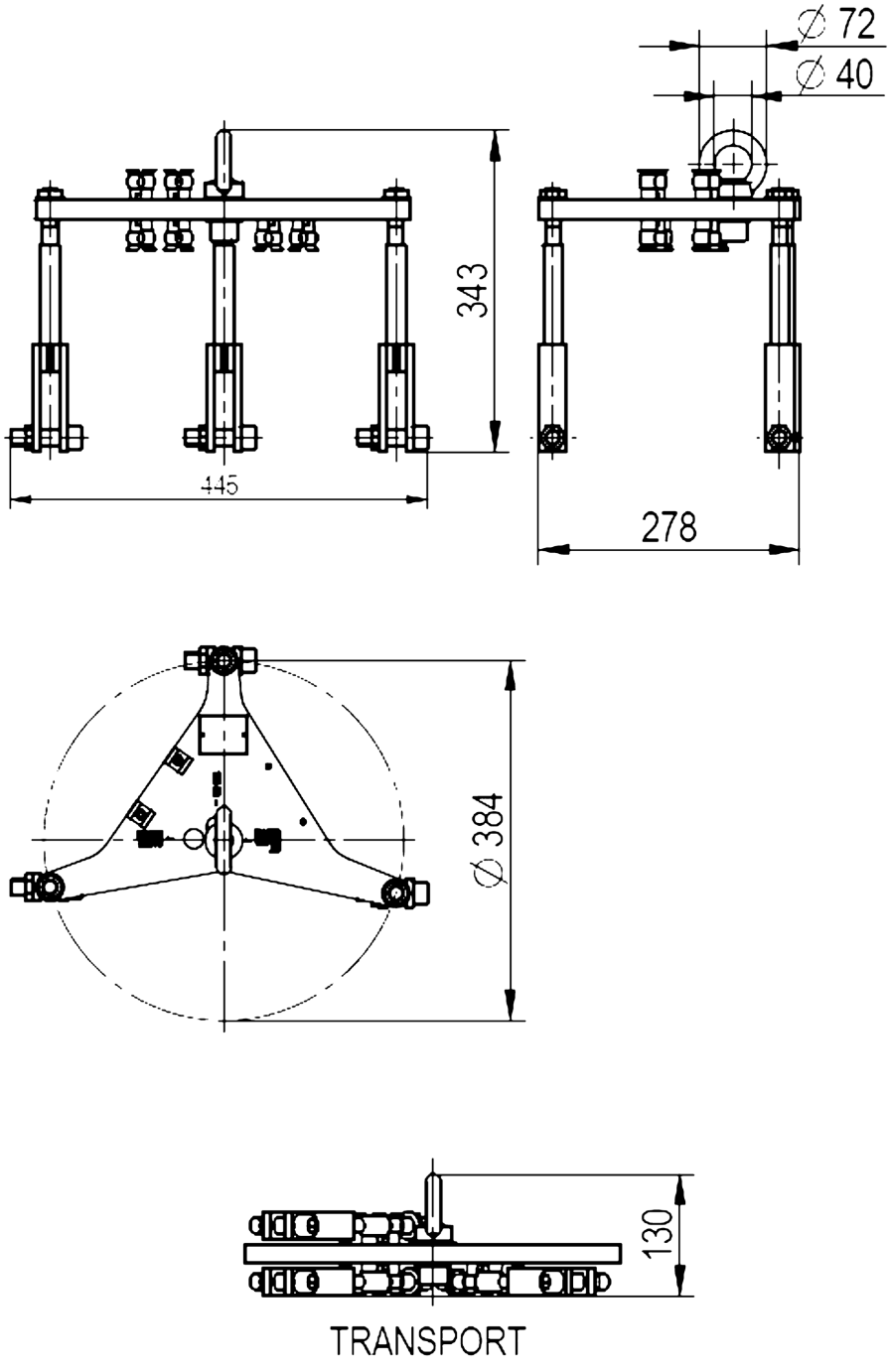

9.5 OILTAP® G - selector connection contacts (890741)

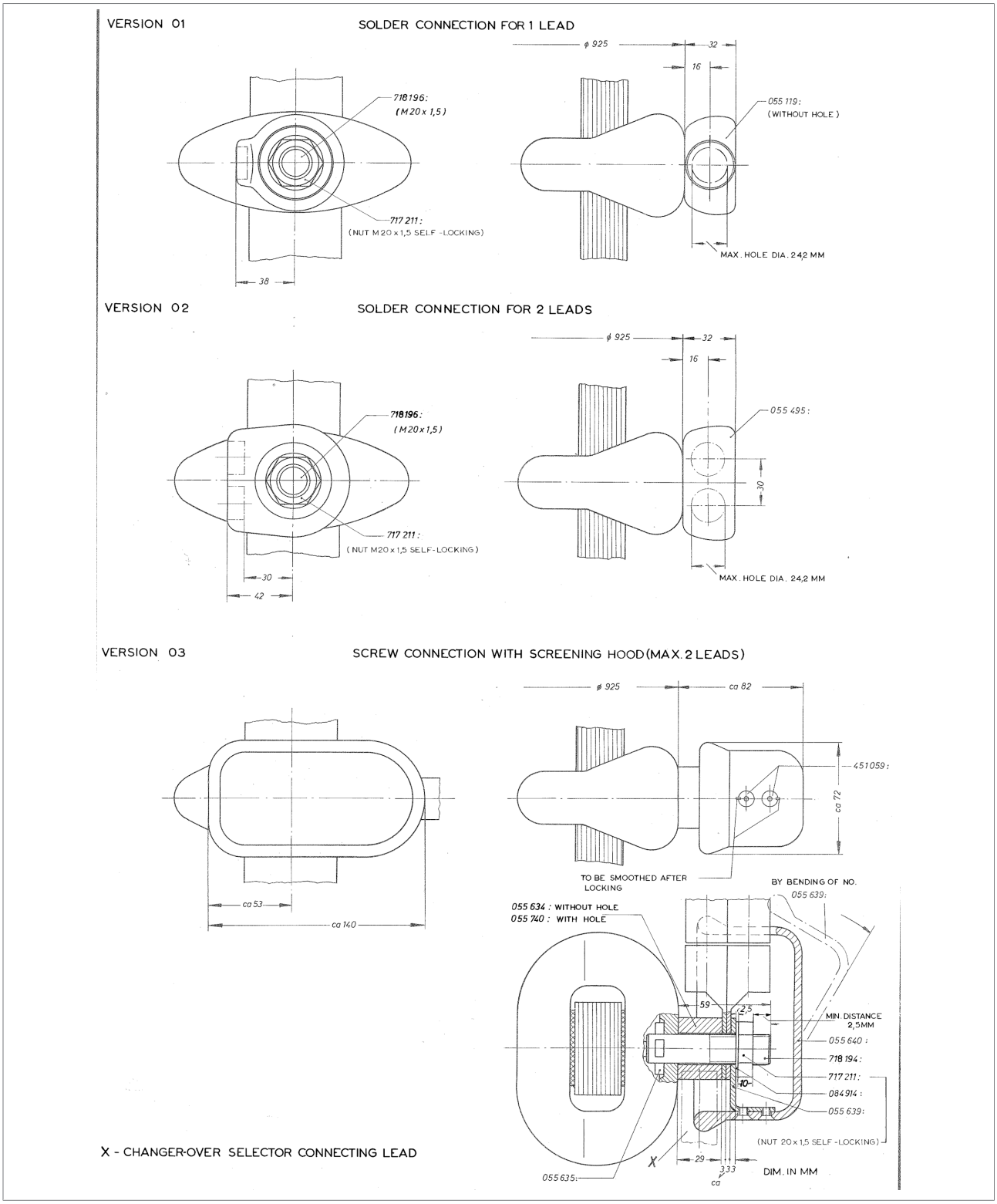

VERSION 04 STANDARD - CONNECTION

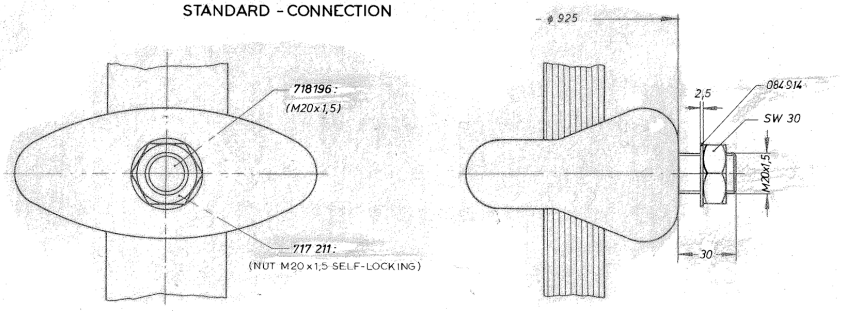

VERSION 05 SCREW CONNECTION FOR MAX. 2 LEADS

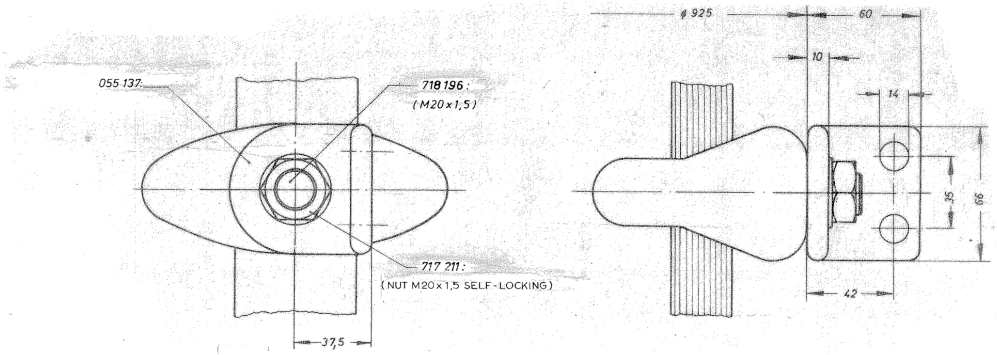

VERSION 06 SCREW CONNECTION FOR MAX. 4 LEADS

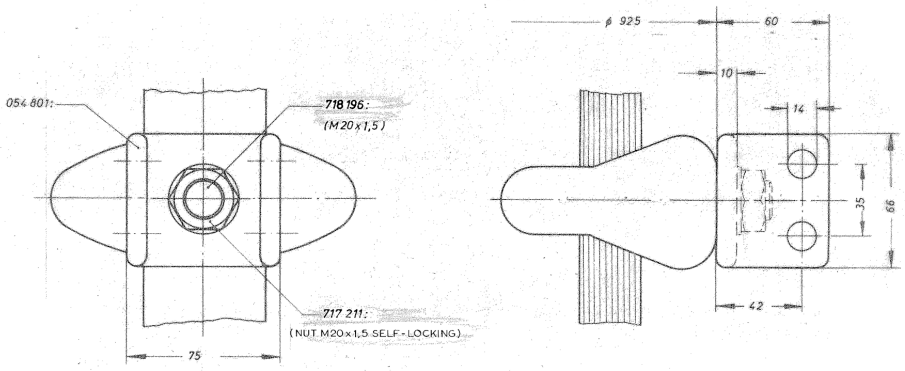

VERSION 07 SCREW CONNECTION FOR 2 LEADS WITH CABLE SHOES

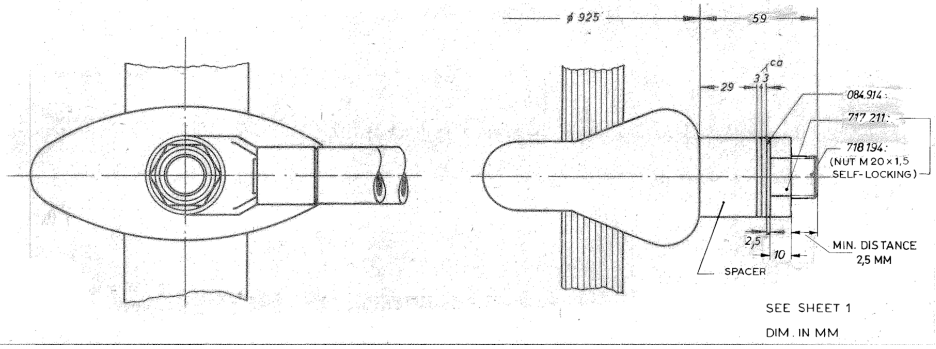

9.6 OILTAP® G – tracing template (890436)

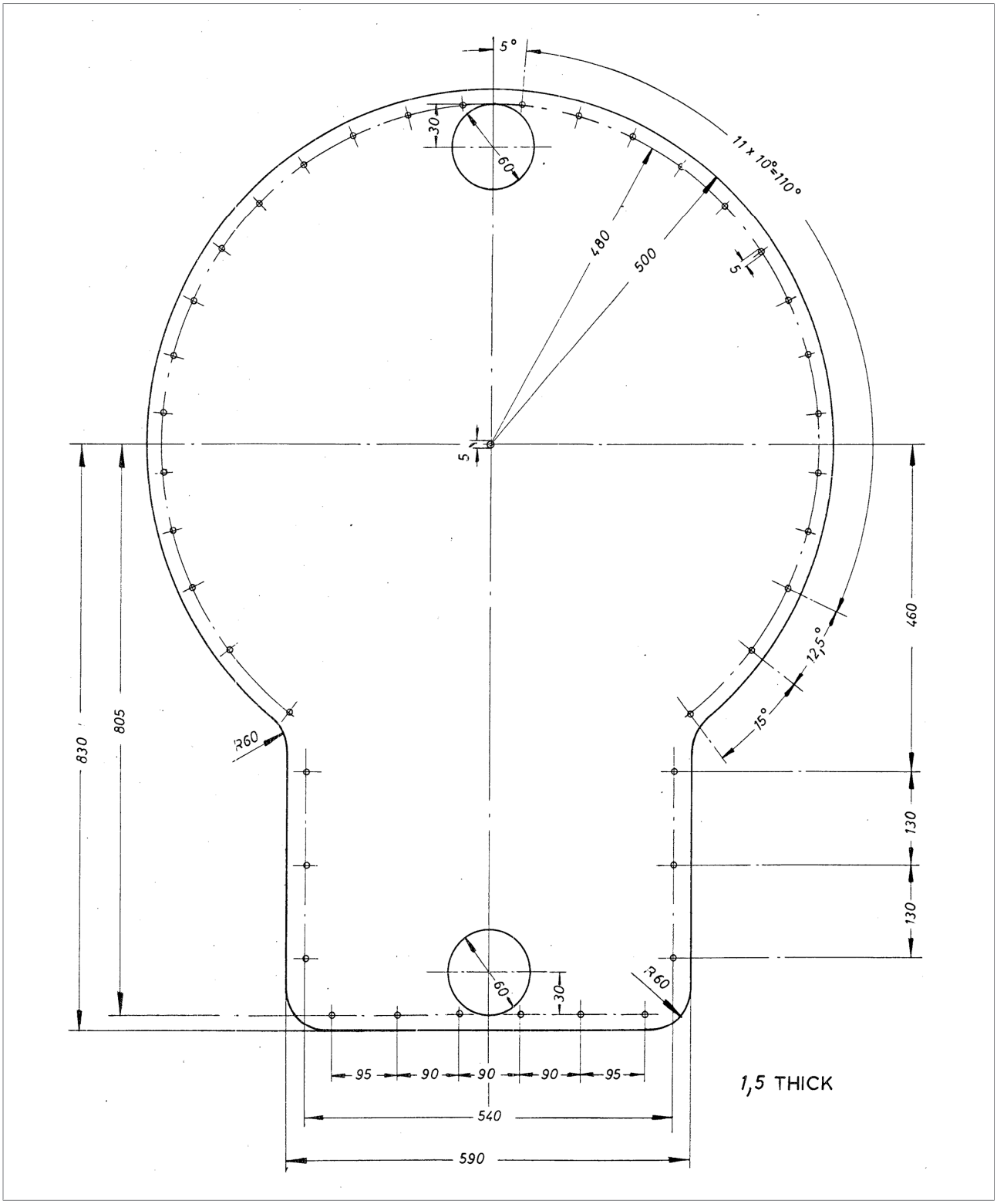

9.7 Bevel gear CD 6400, dimensional drawing (892916)

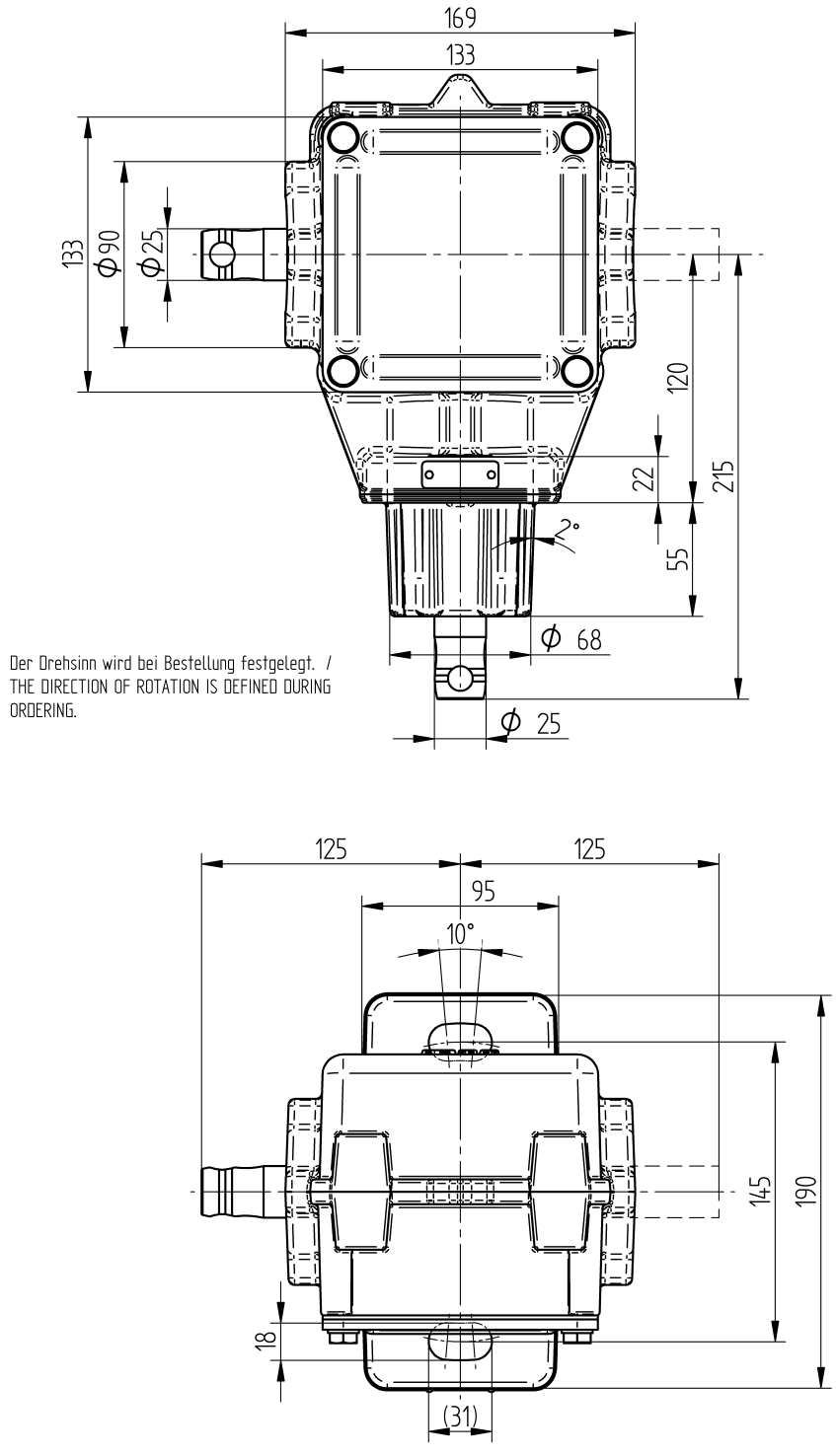

Glossary

CO

Change-Over contact

DC

Direct current

Dielectric strength

Material-specific property of isolators [kV/2.5 mm]; maximum electrical field strength without a breakdown (arc)

IEC

The International Electrotechnical Commission (IEC for short) is involved in the preparation and publication of international standards for electrical, electronic and related technologies.

IP

Ingress protection

MR

Maschinenfabrik Reinhausen GmbH

NC

Normally Closed contact

NO

Normally Open contact

NPT

National Pipe Thread (US thread standard)

Maschinenfabrik Reinhausen GmbH
Falkensteinstrasse 8
93059 Regensburg

+49 (0)941 4090-0
sales@reinhausen.com

www.reinhausen.com

4446926/01 EN - OILTAP® G -
- 10/21 - Maschinenfabrik Reinhausen GmbH 2021

THE POWER BEHIND POWER.