Operating instructions
ECOTAP® VPD® III 30D-24 / MD&C. On-load tap-changer with motor-drive unit

8209941/05 EN

© All rights reserved by Maschinenfabrik Reinhausen
Dissemination and reproduction of this document and use and disclosure of its content are strictly prohibited unless expressly permitted.
Infringements will result in liability for compensation. All rights reserved in the event of the granting of patents, utility models or designs.
The product may have been altered since this document was published.
We reserve the right to change the technical data, design and scope of supply.
Generally the information provided and agreements made when processing the individual quotations and orders are binding.
The product is delivered in accordance with MR's technical specifications, which are based on information provided by the customer. The customer has a duty of care to ensure the compatibility of the specified product with the customer's planned scope of application.
The original operating instructions were written in German.

Table of contents

1 Introduction 5
1.1 Manufacturer 5
1.2 Completeness 5
1.3 Safekeeping 6
1.4 Notation conventions 6
1.4.1 Hazard communication system 6
1.4.2 Information system 7
1.4.3 Instruction system 7
1.4.4 Typographic conventions 7

2 Safety 8
2.1 Appropriate use 8
2.2 Inappropriate use 9
2.3 Fundamental safety instructions 9
2.4 Personnel qualification 10
2.5 Personal protective equipment 11

3 IT security 12
3.1 General 12
4 Product description 13
4.1 Scope of delivery 13
4.2 Function description 13
4.3 Operating modes 14
4.4 Design 16
4.4.1 Control unit 17
4.5 Control unit operating concept 19

5 Packaging, transport and storage 22
5.1 Packaging 22
5.1.1 Suitability 22
5.1.2 Markings 22
5.2 Transportation, receipt and handling of shipments 23
5.3 Storage of shipments 24
5.4 Unpacking shipments and checking for transportation damages 24

6 Mounting 25
6.1 Installation variants 25
6.2 Mounting the on-load tap-changer on the transformer 26
6.3 Connecting tap winding and on-load tap-changer take-off lead 29
6.4 Mounting motor-drive unit 31
6.5 Connecting control unit at the transformer manufacturer's site 36
6.5.1 Cable recommendation 36
6.5.2 Connecting motor-drive unit and voltage supply 37
6.6 Taking measurements 38
6.7 Drying the on-load tap-changer 40
6.8 Filling transformer with oil 42

7 Commissioning 43
7.1 Commissioning the on-load tap-changer at the transformer manufacturer's site 43
7.1.1 Performing trial tap-change operations 45
7.1.2 Tests on the transformer 45
7.2 Transporting the transformer 48
7.3 Commissioning transformer 48
7.3.1 Checking the correct position of the on-load tap-changer and motor-drive unit 49
7.3.2 Mounting the control unit on an even surface 50
7.3.3 Connecting the control unit 50
7.3.4 Switching on power supply 56
7.3.5 Performing trial tap-change operations 58
7.3.6 Switching on medium voltage 58
7.3.7 Setting parameters 59
7.3.8 Checking automatic voltage regulation 59
7.3.9 When operating with alternative insulating liquids: activating temperature blocking 59
7.3.10 Switching on the low-voltage busbar 60

8 Operation 61
8.1 Monitoring on-load tap-changer 61
8.2 Selecting the operating mode 62
8.3 Actuating the on-load tap-changer in emergency operation 63
8.4 Configuring the control unit 66
8.4.1 Regulation 66
8.4.2 Active power-dependent adjustment of the desired voltage value (DS option) 71
8.4.3 Measured value memory (DS option) 76
8.4.4 Voltage blocking (P4) 80
8.4.5 Blocking function (P5) 81
8.4.6 Target position for loss of voltage (P6) 81
8.4.7 Number of operating positions (P7) 83
8.4.8 Regulating range (P8) 83
8.4.9 Remote behavior (P9) 84
8.4.10 Password protection (P10) 84
8.4.11 Behavior in case of failure of communication (P12) 86
8.4.12 Communication settings (P20) 88
8.4.13 Adjustment (F1) 90
8.4.14 Reading remaining life (F2) 92
8.4.15 LED function test (F3) 94
8.4.16 Software update (F4) 94
8.4.17 Invert travel commands (F5) 94
8.4.18 Read out software version (F6) 95
8.4.19 Customer message for event messages E1.1 and E2 (F7) 95
8.4.20 Reset to factory setting (F8) 96

8.4.21 Display control parameters (F9) 96
8.4.22 Control parameters and measured values of the DS function (F10) 97
8.4.23 Displaying event memory (E) 100

9 Control system protocol 101
9.1 Modbus RTU Parameters 101
9.2 Function codes 102
9.3 Data format 102
9.4 Data points (single inquiry) 103
9.4.1 Coils 103
9.4.2 Discrete Inputs 105
9.4.3 Input register (without option DS) 107
9.4.4 Input register (with option DS) 108
9.4.5 Holding register (without option DS) 111
9.4.6 Holding register (with option DS) 113
9.4.7 Function Code 8 – Diagnostics 115
9.5 Data points (collective inquiry) 116

10 Fault elimination 118
10.1 General faults 118
10.2 Problem with automatic voltage regulation (AVR AUTO) 118
10.3 Other faults 119

11 Maintenance 120
11.1 Inspection 120
11.1.1 Visual check 120
11.1.2 Checking the control unit 120
11.1.3 Read out software version (F6) 121
11.1.4 Reading remaining life (F2) 121
11.1.5 LED function test (F3) 122
11.1.6 Checking the temperature blocking 123
11.1.7 Oil quality 123
11.2 Maintenance 124
11.3 Care 124

12 Messages 125
12.1 LEDs 125
12.2 Event messages 125

13 Overview of parameters 127

14 Disposal 130

15 Technical data 131
15.1 On-load tap-changer type designation 131
15.1.1 ECOTAP® VPD on-load tap-changer designation 131
15.1.2 Number of positions and basic connection 131
15.2 Technical data for the on-load tap-changer 132
15.3 Step capacity diagram 133
15.4 Permitted voltage stresses 134
15.5 Limit values for dielectric strength and water content of insulating fluids 137
15.6 Control unit without option DS 138
15.7 Control unit with option DS 140
15.8 Technical data for the motor-drive unit 142

16 Drawings 143
16.1 Information on the drawings in the appendix 143
16.2 Dimensional drawings 143
16.2.1 10157324 144
16.3 High-voltage connection diagrams 147
16.3.1 SBI_8049432 148
16.3.2 SBI_8049434 149
16.4 Dimensional drawing and connection diagram for control unit 150
16.4.1 SED_10954267 151
16.4.2 SBI_10921611 152
16.4.3 SED_10311922_DS 154
16.4.4 SBI_10921613_DS 155

1 Introduction

This technical file contains detailed descriptions on the safe and proper installation, connection, commissioning and monitoring of the product.

It also includes safety instructions and general information about the product.

This technical file is intended solely for specially trained and authorized personnel.

1.1 Manufacturer

Maschinenfabrik Reinhausen GmbH
Falkensteinstraße 8
93059 Regensburg
Deutschland
+49 941 4090-0
sales@reinhausen.com
reinhausen.com

Customer portal

You can find additional information on this product in our customer portal at portal.reinhausen.com.

1.2 Completeness

This technical file is incomplete without the supporting documents.

The following documents are considered supporting documents:
- Connection diagrams
- Routine test report

Also observe generally valid legislation, standards, and guidelines as well as specifications on accident prevention and environmental protection in the respective country of use.

1.3 Safekeeping

Keep this technical file and all supporting documents ready at hand and accessible for future use at all times.

1.4 Notation conventions

1.4.1 Hazard communication system

Warnings in this technical file are displayed as follows.

1.4.1.1 Warning relating to section

Warnings relating to sections refer to entire chapters or sections, sub-sections or several paragraphs within this technical file. Warnings relating to sections use the following format:

⚠ WARNING

Type of danger!
Source of the danger and outcome.
› Action
› Action

1.4.1.2 Embedded warning information

Embedded warnings refer to a particular part within a section. These warnings apply to smaller units of information than the warnings relating to sections. Embedded warnings use the following format:

⚠ DANGER! Instruction for avoiding a dangerous situation.

1.4.1.3 Signal words in warning notices

Signal word	Meaning
DANGER	Indicates a hazardous situation which, if not avoided, will result in death or serious injury.
WARNING	Indicates a hazardous situation which, if not avoided, could result in death or serious injury.
CAUTION	Indicates a hazardous situation which, if not avoided, could result in minor or moderate injury.
NOTICE	Indicates measures to be taken to prevent damage to property.

Table 1: Signal words in warning notices

1.4.2 Information system

Information is designed to simplify and improve understanding of particular procedures. In this technical file it is laid out as follows:

> Important information.

1.4.3 Instruction system

This technical file contains single-step and multi-step instructions.

Single-step instructions

Instructions which consist of only a single process step are structured as follows:

Aim of action
✓ Requirements (optional).
› Step 1 of 1.
  » Result of step (optional).
» Result of action (optional).

Multi-step instructions

Instructions which consist of several process steps are structured as follows:

Aim of action
✓ Requirements (optional).
1. Step 1.
   » Result of step (optional).
2. Step 2.
   » Result of step (optional).
» Result of action (optional).

1.4.4 Typographic conventions

The following typographic conventions are used in this technical file:

Typographic convention	Purpose	Example
UPPERCASE	Operating controls, keys	AVR MANUAL
Bold	Displays/menus	**P21**
Italics	System messages/LED displays	*ERROR* LED
[► Page number].	Cross reference	[► 41].

Table 2: Typographic conventions

2 Safety

- Read this technical file through to familiarize yourself with the product.
- This technical file is a part of the product.
- Read and observe the safety instructions provided in this chapter.
- Read and observe the warnings in this technical file in order to avoid function-related dangers.
- The product is manufactured on the basis of state-of-the-art technology. Nevertheless, risks to life and limb for the user or impairment of the product and other material assets due to the function may arise in the event of improper use.

2.1 Appropriate use

The product is an on-load tap-changer with motor-drive unit and control unit and adjusts the transmission ratio of transformers without interrupting the load flow. The product is designed solely for use in electrical energy systems and facilities. If used as intended and in compliance with the requirements and conditions specified in this technical file as well as the warning notices in this technical file and attached to the product, then the product does not present any danger to people, property or the environment. This applies throughout the service life of the product, from delivery, installation and operation to removal and disposal.

The following is considered intended use:
- Only use the ECOTAP® VPD® on-load tap-changer in systems set up in accordance with IEC 61936-1.
- You will find the standard valid for the product and the year of issue on the nameplate.
- Only operate the product in accordance with this technical file and the agreed delivery conditions and technical data.
- Only operate standard design on-load tap-changers in entirely oil-filled transformers.
- Operation with alternative insulating fluids is possible in accordance with the specification in the Technical data [▶Section 15, Page 131]. In such cases, you must ensure compliance with the limited temperature ranges by means of temperature blocking.
- The serial numbers of the on-load tap-changer and motor-drive unit must match. Operating an on-load tap-changer and motor-drive unit with differing serial numbers is not permitted.
- Ensure that all necessary work is performed by qualified personnel only.
- Use the equipment and special tools supplied solely for the intended purpose and in accordance with the specifications of this technical file.

Permitted electrical operating conditions

In addition to the design data in accordance with the order confirmation, observe the following limits for the through-current and the step voltage:

In the standard version, the on-load tap-changer is designed for sinusoidal 50/60 Hz alternating current with a curve form symmetrical to the zero axis and can switch 2 times the rated through-current I_r at its rated step voltage U_{ir}.

Exceeding the rated step voltage U_{ir} by up to 10% for a short period is permitted as long as the rated step capacity P_{StN} permissible for this step voltage is not exceeded.

2.2 Inappropriate use

Use is considered inappropriate if the product is used in a way other than as described in the "Appropriate use" section. In addition, observe the following:

Prohibited electrical operating conditions

All operating conditions that do not comply with the design data in accordance with the order confirmation are prohibited.

Prohibited operating conditions may arise due to short circuits as well as due to inrush current impulses when energizing transformers or other electrical machines. This applies to the affected transformer itself just as it does to transformers electrically connected in parallel or serially or other electrical machines.

Higher voltages may occur due to transformer overexcitation following load shedding, for example.

Operations outside of the permitted operating conditions can lead to injury to persons and damage to the product.

- Prevent any such operations outside of the permitted operating conditions by taking suitable measures.

2.3 Fundamental safety instructions

To prevent accidents, malfunctions and damage as well as unacceptable adverse effects on the environment, those responsible for transport, installation, operation, maintenance and disposal of the product or parts of the product must ensure the following:

Personal protective equipment

Loosely worn or unsuitable clothing increases the danger of becoming trapped or caught up in rotating parts and the danger of getting caught on protruding parts. This poses a danger to life and limb.

- Wear appropriate personal protective equipment such as a helmet, work gloves, etc. for the respective activity.
- Never wear damaged personal protective equipment.
- Never wear rings, necklaces, or other jewelry.
- If you have long hair, wear a hairnet.

Work area

Untidy and poorly lit work areas can lead to accidents.

- Keep the work area clean and tidy.
- Make sure that the work area is well lit.
- Observe the applicable laws for accident prevention in the relevant country.

Working during operation

The product may only be operated in a sound, operational condition. Otherwise it poses a danger to life and limb.

- Regularly check the operational reliability of safety equipment.
- Comply with the inspection work, maintenance work and maintenance intervals described in this technical file.

Working with current transformers

Dangerous high voltages may occur when a current transformer is operated with an open secondary circuit. This can lead to injuries and property damage.

- Never operate a current transformer with an open secondary circuit; short-circuit the current transformer to prevent this.
- Observe the information in the current transformer operating instructions.

Explosion protection

Highly flammable or explosive gases, vapors and dusts can cause serious explosions and fire.

- Do not install or operate the product in areas where a risk of explosion is present.

Safety markings

Warning signs and safety information plates are safety markings on the product. They are an important aspect of the safety concept.

- Observe all safety markings on the product.
- Make sure all safety markings on the product remain intact and legible.
- Replace safety markings that are damaged or missing.

Ambient conditions

To ensure reliable and safe operation, the product must only be operated under the ambient conditions specified in the technical data.

- Observe the specified operating conditions and requirements for the installation location.

Modifications and conversions

Unauthorized or inappropriate changes to the product may lead to personal injury, material damage and operational faults.

- Only modify the product after consultation with Maschinenfabrik Reinhausen GmbH.

Spare parts

Spare parts not approved by Maschinenfabrik Reinhausen GmbH may lead to physical injury, damage to the product and malfunctions.

- Only use spare parts that have been approved by Maschinenfabrik Reinhausen GmbH.
- Contact Maschinenfabrik Reinhausen GmbH.

2.4 Personnel qualification

The person responsible for assembly, commissioning, operation, maintenance and inspection must ensure that the personnel are sufficiently qualified.

Electrically skilled person

The electrically skilled person has a technical qualification and therefore has the required knowledge and experience, and is also conversant with the applicable standards and regulations. The electrically skilled person is also proficient in the following:

- Can identify potential dangers independently and is able to avoid them.
- Is able to perform work on electrical systems.
- Is specially trained for the working environment in which (s)he works.
- Must satisfy the requirements of the applicable statutory regulations for accident prevention.

Electrically trained persons

An electrically trained person receives instruction and guidance from an electrically skilled person in relation to the tasks undertaken and the potential dangers in the event of inappropriate handling as well as the protective devices and safety measures. The electrically trained person works exclusively under the guidance and supervision of an electrically skilled person.

Operator

The operator uses and operates the product in line with this technical file. The operating company provides the operator with instruction and training on the specific tasks and the associated potential dangers arising from improper handling.

Technical Service

We strongly recommend having maintenance, repairs and retrofitting carried out by our Technical Service department. This ensures that all work is performed correctly. If maintenance is not carried out by our Technical Service department, please ensure that the personnel who carry out the maintenance are trained and authorized by Maschinenfabrik Reinhausen GmbH to carry out the work.

Authorized personnel

Authorized personnel are trained by Maschinenfabrik Reinhausen GmbH to carry out special maintenance.

2.5 Personal protective equipment

Personal protective equipment must be worn during work to minimize risks to health.

- Always wear the personal protective equipment required for the job at hand.
- Never wear damaged personal protective equipment.
- Observe information about personal protective equipment provided in the work area.

Protective clothing	Close-fitting work clothing with a low tearing strength, with tight sleeves and with no protruding parts. It mainly serves to protect the wearer against being caught by moving machine parts.
Safety shoes	To protect against falling heavy objects and slipping on slippery surfaces.
Safety glasses	To protect the eyes from flying parts and splashing liquids.
Visor	To protect the face from flying parts and splashing liquids or other dangerous substances.
Hard hat	To protect against falling and flying parts and materials.
Hearing protection	To protect against hearing damage.
Protective gloves	To protect against mechanical, thermal, and electrical hazards.

Table 3: Personal protective equipment

3 IT security

Observe the following recommendations to operate the product safely.

3.1 General

- Ensure that only authorized personnel have access to the device.
- Only use the device within an ESP (electronic security perimeter). Do not connect the device to the Internet in an unprotected state. Use mechanisms for vertical and horizontal network segmentation and security gateways (firewalls) at the transition points.
- Ensure that the device is only operated by trained personnel who are familiar with IT security.

4 Product description

4.1 Scope of delivery

The product is packaged with protection against moisture and is delivered as follows:

- On-load tap-changer
- Motor-drive unit with connection cable
- Control unit
- O-ring
- Additional seal with flat gasket
- Fixing screws with locking washers
- Technical documents

Note the following information:

- Check the shipment for completeness on the basis of the shipping documents
- Store the parts in a dry place until installation
- The product must remain in its undamaged, protective wrapping and may only be removed immediately before installation

You will find more information in the "Packaging, transport and storage" [▶Section 5, Page 22] chapter.

4.2 Function description

On-load tap-changer

On-load tap-changers are used to adjust the desired tap of a tap winding under load.

The on-load tap-changer is based on the high-speed resistor-type tap-changer principle and uses vacuum cells to change the tap position under load. In this process, the arc is extinguished while isolated in a vacuum cell, preventing contaminants from entering the oil.

Motor-drive unit

The motor-drive unit adjusts the operating position of on-load tap-changers in regulating transformers to the individual operating requirements. The on-load tap-change operation is initiated via actuation of the motor-drive unit (a single control impulse). This adjustment operation is always completed regardless of any other control impulses issued during the tap-change operation. In the standard design, the next tap-change operation can only proceed once all control devices have reached their resting positions.

Voltage regulation

The motor-drive unit is equipped with a control unit which enables automatic voltage regulation. This is used to keep the output voltage of a transformer with an on-load tap-changer constant. The control unit compares the transformer's measured voltage, U_{actual}, with a defined reference voltage, $U_{desired}$. The difference between U_{actual} and $U_{desired}$ is the control deviation dU. If the control deviation dU is greater than the set bandwidth, the control unit triggers a tap-change operation after the delay time T1 has elapsed in order to reduce the control deviation.

You can set all parameters needed to set the voltage regulation via a parameterization menu.

With the optional Dynamic Setpoint (DS) function, you can adjust the desired voltage value based on the measured active power to compensate for a voltage drop during increased load or a voltage increase due to a decentralized feed-in.

The DS option includes a measured value memory (ring buffer) which stores the single-phase measured values of current, voltage, cos φ, power and reactive power of approx. one year. You can read out the stored measured values block by block via Modbus RTU with time stamp and indication of the tap position.

OLTC PreCheck

Before each tap-change operation, the motor-drive unit checks whether the drive train of the on-load tap-changer is tight or whether one or more micro-switches have failed. In the event of a micro-switch defect, the device switches to fault mode and issues an error message.

> Exception: In the EXTERNAL CONTROL operating mode, the device performs an automatic OLTC-PreCheck once every 24 hours, not before each tap-change operation.

Connection cable (X2/X4) test:

The control unit checks the connection cable to the motor every 60 seconds in all operating modes. This check takes approx. 50 ms. The following applies for the duration of the test:

1. Tap-change operations are not possible.
2. Switching commands will be ignored.
3. There is no message.
4. The data point "Ready for tap-change operation" (discrete Inputs, address 29 as well as collective query, address 202-13) assumes the value 0.
5. The data points "Relay ok" (discrete inputs, address 21 as well as collective query, address 202-5) remains unchanged.

Behavior in the event of a voltage interruption

Should a voltage interruption occur during a tap-change operation, the motor-drive unit completes the tap-change operation that has already started. Open both relay contacts on X5 and the device will block further on-load tap-change operations until the voltage supply is restored. You can adapt this response using the "Target position for loss of voltage" [▶Section 8.4.6, Page 81] function so that the on-load tap-changer is changed to a defined tap position before this blocking. For this purpose, the control unit is equipped with an energy accumulator. If it is ready to work, this is indicated by the LED staying lit. After a loss of voltage or a deliberate disconnection from the mains, it takes around 30 minutes for this energy accumulator to discharge.

4.3 Operating modes

> The control ensures that the required cooling time of approx. 3 seconds is maintained after each on-load tap-change operation. During this time, the control will not accept any tap-change commands. An exception to this is the optional multi-tap-change function, which is only possible in the operating mode EXTERNAL CONTROL.

There are 3 operating modes on the control unit for controlling the on-load tap-changer.

AVR MANUAL manual mode

In AVR MANUAL manual mode, there is no automatic control. The motor-drive unit can be controlled using the device's operating panel (= increase voltage, = reduce voltage). The device settings can be changed.

AVR AUTO auto mode

In auto mode, the device automatically regulates the voltage in accordance with the set parameters. The voltage is measured in a single phase via the supply voltage. You have to switch to AVR MANUAL manual mode to configure the control unit.

Control via EXTERNAL CONTROL

In the EXTERNAL CONTROL operating mode, the commands of an external control unit (e.g. ECOTAP® VPD® CONTROL PRO) are executed. In this case, manual operation using the RAISE and LOWER keys is not possible.

When operating in this mode, observe the safety instructions and the description in the external control unit operating instructions.

4.4 Design

You will find a detailed drawing of the on-load tap-changer in the "Drawings" section.

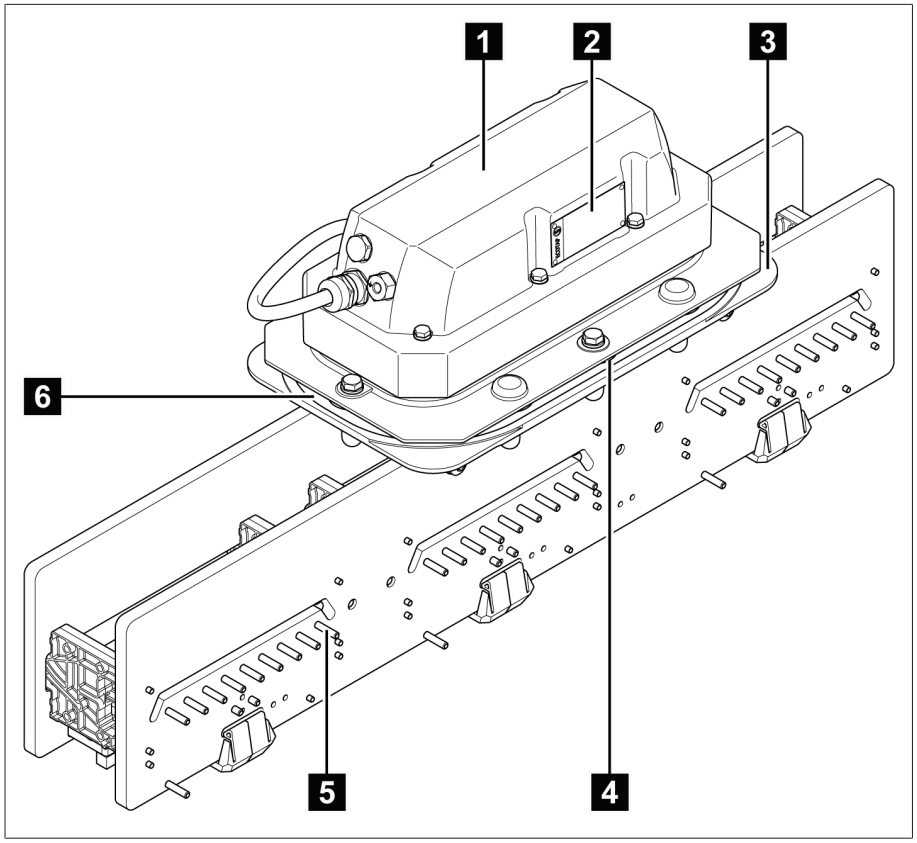

Figure 1: Front view

1	Motor-drive unit	2	Nameplate
3	Sealing module	4	Additional seal
5	Connection contacts	6	O-ring

4.4.1 Control unit

The control unit is equipped with the following operating controls and display elements:

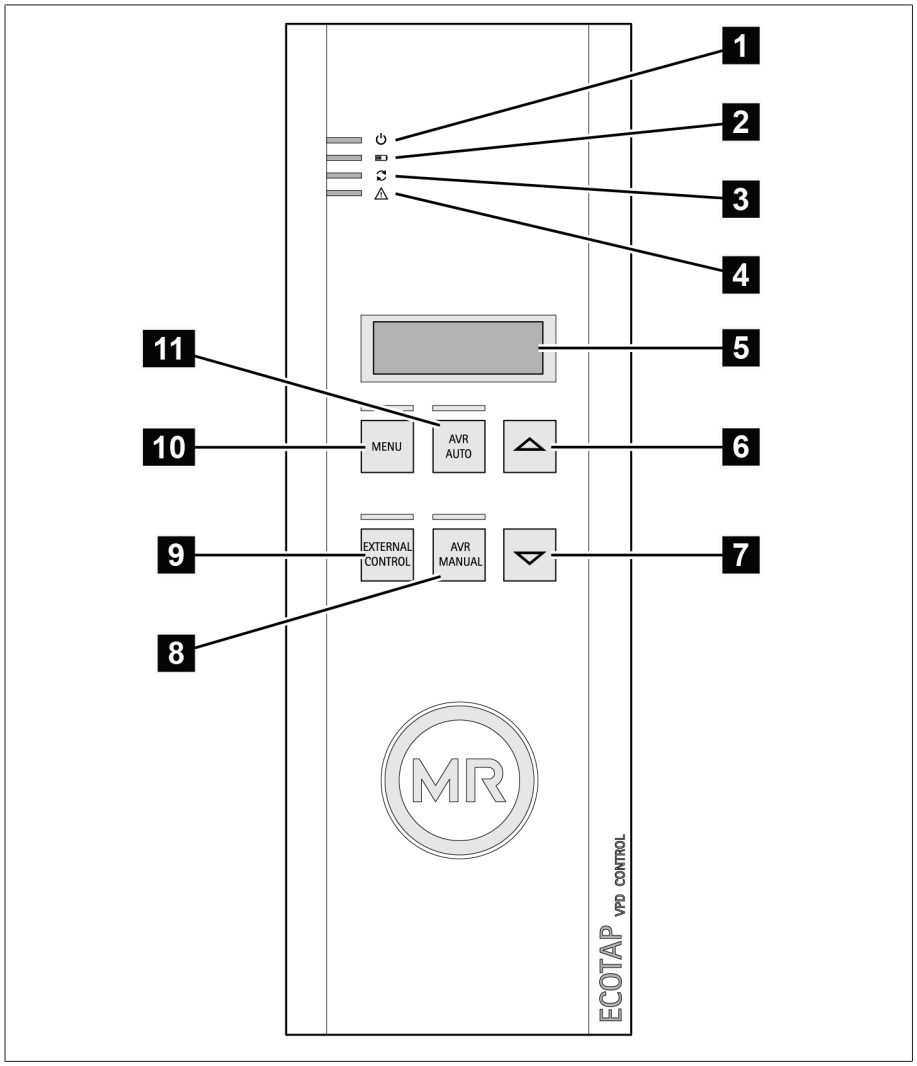

Figure 2: Operating controls and display elements

1	LED ⏻ (*VOLTAGE*)	2	LED 🔋 (*CAPACITY*)
3	LED ⟳ (*MOTOR*)	4	⚠ LED (*ERROR*)
5	Display	6	RAISE key
7	LOWER key	8	AVR MANUAL key
9	EXTERNAL CONTROL key	10	MENU key
11	AVR AUTO key		

Display

The display switches every 3 seconds. The following information is displayed:

000097	Operations counter (e.g. 97 tap-change operations)
POS__5	Current tap position (e.g. "POS__5" = Position 5 = tap position 5)
U 224.7	Measured voltage (e.g. 224.7 V)
E4.1	Event code, if event messages are present (e.g. event code *E2.6* and *E4.1* in succession)

Table 4: Display

Standard model interfaces

The following interfaces are located on the underside of the control unit:

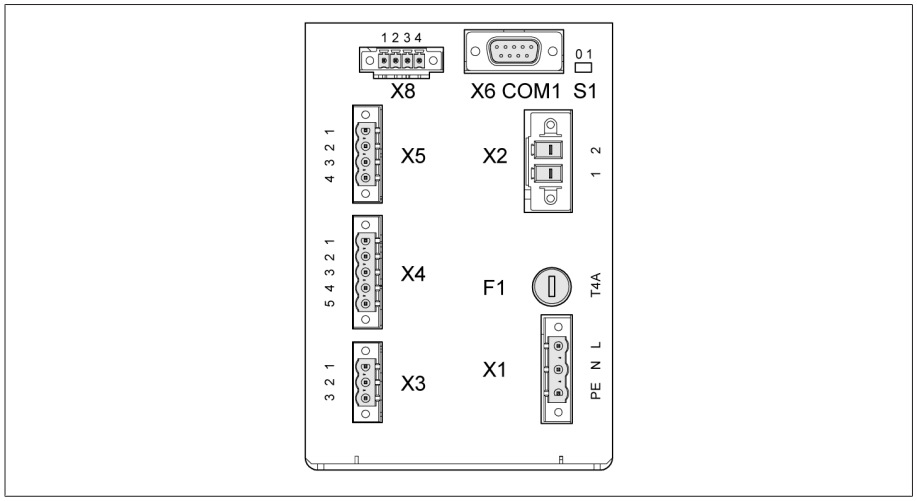

Figure 3: Interfaces

X1	Control unit voltage measurement and power supply	X2	Motor voltage supply
X3	Blocking contact	X4	Control gear signal line
X5	Customer messages	X6	RS 485 communication interface
X8	MR service interface	S1	Terminating resistor switch (communication interface X6)
F1	Fine-wire fuse, 6.3 x 32 mm, min. 250 V, T4A		

Version with optional DS function

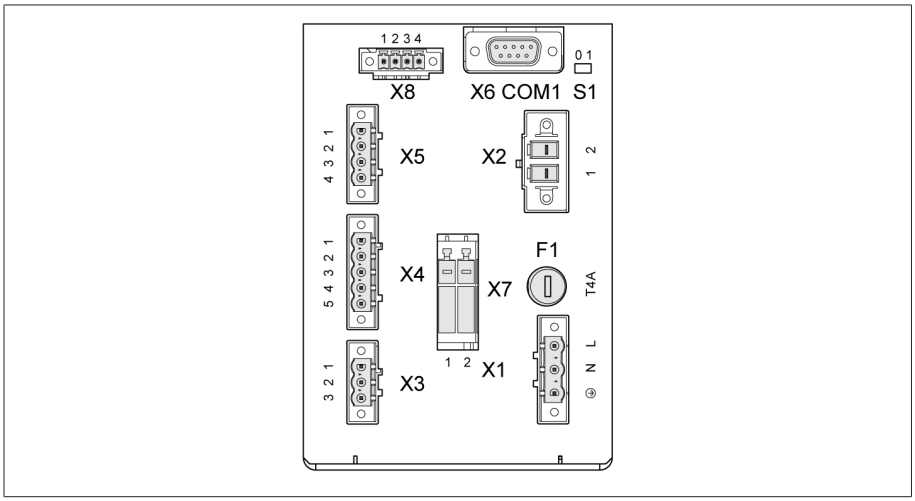

Figure 4: Version with DS function

X1	Control unit voltage measurement and power supply	X2	Motor voltage supply
X3	Blocking contact	X4	Control gear signal line
X5	Customer messages	X6	RS 485 communication interface
X7	Current transformer input	X8	MR service interface
F1	Fine-wire fuse, 6.3 x 32 mm, min. 250 V, T4A	S1	Terminating resistor switch (communication interface X6)

4.5 Control unit operating concept

You can operate the device using the operating controls on the front panel.

Key		Function
MENU	MENU	Call up or close the parameterization menu Save the parameter change
AVR AUTO	AVR AUTO	Activate automatic voltage regulation
⌃	RAISE	In AVR MANUAL operating mode: RAISE tap-change operation
		In the parameterization menu: Enlarge displayed value
⌃ + AVR AUTO	RAISE + AVR AUTO	In the parameterization menu: Carry out parameter selections more quickly Rapidly increase displayed value (in steps of 30 units or up to the end value of the setting range, depending on the parameter)
⌄	LOWER	In AVR MANUAL operating mode: LOWER tap-change operation
		In the parameterization menu: Shrink displayed value

Key		Function
▽ + AVR AUTO	LOWER + AVR AUTO	In the parameterization menu: Carry out parameter selections more quickly Rapidly decrease displayed value (in steps of 30 units or up to the end value of the setting range, depending on the parameter)
AVR MANUAL	AVR MANUAL	Activate manual mode
		In the parameterization menu: Confirm selection
EXTERNAL CONTROL	EXTERNAL CONTROL	Activate voltage regulation via external control unit
		In the parameterization menu: Return to the next highest level (e.g., from P12.5 to P12)

Table 5: Operating elements

Example 1 To set parameter P2.2, "Delay time T1", proceed as follows:

1. Press AVR MANUAL to activate manual mode.
   » The LED above the AVR MANUAL key lights up.
2. Press MENU to call up the parameterization menu.
   »
3. Press △ to select the menu **P2**.
   »
4. Press AVR MANUAL to confirm the selection.
5. Press △ to select parameter **P2.1**.
   »
6. Press △ to select parameter P2.2.
   »
7. Press AVR MANUAL to confirm the selection.
   »
8. Press △ or ▽ to set the desired value (e.g. 15).
   »
9. Press AVR MANUAL to accept the selection.
   » Go back to the display of the changed parameter:
10. Press MENU to leave the parameterization menu and save the settings.

» The parameter P2.2, "Delay time T1", is set.

Settings are only saved once the parameterization menu is exited via the MENU key. If you do not press the MENU key within 3 minutes, the parameterization menu is exited automatically and the changes are not saved.

Example 2 First, parameter P12.5, "Waiting period T4 when communication is restored", should be changed. The parameter P1 "Desired voltage" should be set.

1. Press AVR MANUAL to activate manual mode.
   » The LED above the AVR MANUAL key lights up.
2. Press MENU to call up the parameterization menu.
   » P1
3. Press ▲ to select the menu **P12**.
   » P12
4. Press AVR MANUAL to confirm the selection.
5. Press ▲ to select parameter P12.5.
   » P12.5
6. Press AVR MANUAL to confirm the selection.
   » 30
7. Press ▲ to set the desired value (e.g. 120).
   » 120
8. Press AVR MANUAL to accept the selection.
   » Go back to the display of the changed parameter: P12.5
9. Press EXTERNAL CONTROL to return to menu **P12**.
   » P12
10. Press ▼ to select parameter P1.
    » P1
11. Press AVR MANUAL to accept the selection.
12. Press ▲ or ▼ to set the desired value (desired voltage, e.g. 235 V)
    » 235
13. Press AVR MANUAL to confirm the selection.
14. Press MENU to leave the parameterization menu and save the settings.
    » The parameters P12.5 and P1 will be set as a result.

You will find a detailed description of all control unit parameters and functions in the "Configuring control unit" [▶Section 8.4, Page 66] chapter.

5 Packaging, transport and storage

5.1 Packaging

The products are sometimes supplied with sealed packaging and sometimes in a dry state, depending on requirements.

Sealed packaging surrounds the packaged goods with plastic foil on all sides.

Products that have also been dried are identified by a yellow label on the sealed packaging. In the dry state, delivery is also possible in a transport container.

The information in the following sections should be applied as appropriate.

5.1.1 Suitability

NOTICE

Property damage due to incorrectly stacked packaging!
Stacking the packaging incorrectly can result in damage to the packaged goods.
› Do not stack packaging above a height of 1.5 m.

The packaging is intended to ensure undamaged and fully functional means of transportation in compliance with local transportation laws and regulations.

A stable carton ensures that, when in the intended transportation position, the packaged goods are stabilized to prevent impermissible changes in position, and that no parts of the packaged goods touch the ground.

The packaged goods are protected from humidity by a plastic foil and desiccant.

5.1.2 Markings

The packaging bears a signature with instructions for safe transport and correct storage. The following symbols apply to the shipment of non-hazardous goods. Adherence to these symbols is mandatory.

	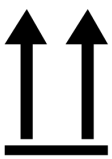			
Protect against moisture	Top	Fragile	Attach lifting gear here	Center of mass

Table 6: Shipping pictograms

5.2 Transportation, receipt and handling of shipments

⚠ WARNING

Danger of death or serious injury!

Danger of death or severe injury due to tipping or falling load.

- Only transport the packaging when closed.
- Do not remove the securing material used in the packaging during transport.
- If the product is delivered on a pallet, secure it sufficiently.
- Only trained and authorized persons may select the sling gear and secure the load.
- Do not walk under the suspended load.
- Use means of transport and lifting gear with a sufficient carrying capacity in accordance with the weight stated on the delivery slip.

In addition to oscillation stress, jolts must also be expected during transportation. In order to prevent possible damage, avoid dropping, tipping, knocking over and colliding with the product.

If the packaging tips over, falls from a certain height (e.g. when slings tear) or experiences an unbroken fall, damage must be expected regardless of the weight.

Every delivered shipment must be checked for the following by the recipient before acceptance (acknowledgment of receipt):

- Completeness based on the delivery slip
- External damage of any type

The checks must take place after unloading when the packaging or transport container can be accessed from all sides.

Visible damage

If external transport damage is found upon receipt of the shipment, proceed as follows:

- Immediately record the identified transport damage in the shipping documents and have this countersigned by the carrier.
- In the event of severe damage, total loss or high damage costs, immediately notify the manufacturer and the relevant insurance company.
- After identifying damage, do not modify the condition of the shipment further and retain the packaging material until an inspection decision has been made by the transport company or the insurance company.
- Record the details of the damage immediately on site together with the carrier involved. This is essential for any claim for damages.
- Photograph damage to packaging and packaged goods. This also applies to signs of corrosion on the packaged goods due to moisture inside the packaging (rain, snow, condensation).
- *NOTICE!* Damage to packaged goods due to damaged sealed packaging. If the product is delivered in sealed packaging, check the sealed packaging immediately. If the sealed packaging is damaged, do not under any circumstances install or commission the packaged goods. Either re-dry the dried packaged goods as per the operating instructions, or contact the manufacturer to agree on how to proceed.
- Identify the damaged parts.

Hidden damage When damages are not determined until unpacking after receipt of the shipment (hidden damage), proceed as follows:

- Make the party responsible for the damage liable as soon as possible by telephone and in writing, and prepare a damage report.
- Observe the time periods applicable to such actions in the respective country. Inquire about these in good time.

With hidden damage, it is very hard to make the transportation company (or other responsible party) liable. Any insurance claims for such damages can only be successful if relevant provisions are expressly included in the insurance terms and conditions.

5.3 Storage of shipments

Pay attention to the markings on the packaging and ensure the packaging is tightly sealed.

When selecting and setting up the storage location, ensure the following:

- Protect stored goods against moisture (flooding, water from melting snow and ice), dirt, pests such as rats, mice, termites and so on, and against unauthorized access.
- Store the packaging on timber beams and planks as protection against rising damp and for better ventilation.
- Ensure sufficient carrying capacity of the ground.
- Keep entrance paths free.
- Check the stored goods at regular intervals.

If the product is installed more than 6 months after delivery, suitable measures must be taken without delay. The following measures can be used:

- Check and, if necessary, replace the desiccant and reseal the plastic foil and outer packaging.
- Unpack the packed goods and store in a suitable storage space (well-ventilated, as dust-free as possible, humidity < 50% where possible).

5.4 Unpacking shipments and checking for transportation damages

- *NOTICE!* Damage to the packaged goods due to unsealed packaging. Transport the packaged goods to the place where they are to be installed. Do not open the plastic foil until just before installation.
- Unpack the packaged goods and check the condition.
- Check the completeness of the accessories kit based on the delivery slip.

6 Mounting

6.1 Installation variants

There are three ways of installing the on-load tap-changer:
1. Installation horizontally below the transformer cover
2. Installation horizontally on the transformer side wall
3. Installation vertically on the transformer side wall

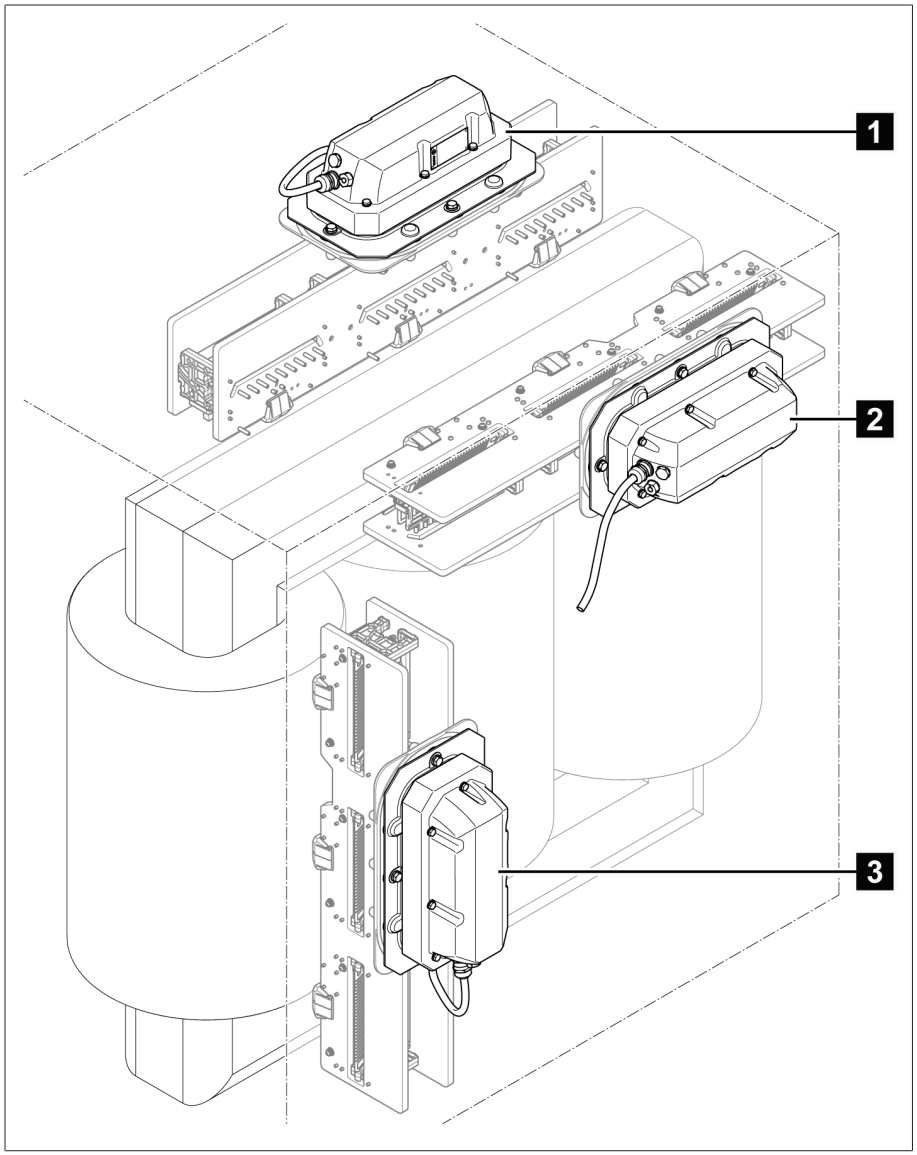

Figure 5: Installation variants

1	Installation horizontally below the transformer cover
2	Installation horizontally on the transformer side wall
3	Installation vertically on the transformer side wall

6.2 Mounting the on-load tap-changer on the transformer

> Do not paint the inner surface of the transformer cover or of the transformer side wall which will later make contact with the sealing module o-ring. Only one coating of primer is permitted.

1. Make an opening for the sealing module and holes for the fixing screws on the transformer. The dimensions and position can be found in the accompanying dimensional drawing.

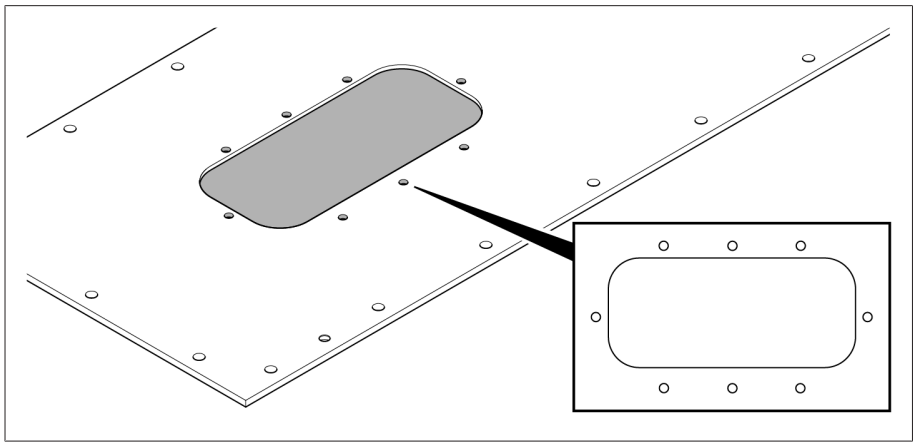

Figure 6: View of the exterior surface of the transformer with opening for sealing module

2. Clean the sealing surfaces on the sealing module and the inner surface of the transformer. Insert the o-ring supplied in the sealing module.

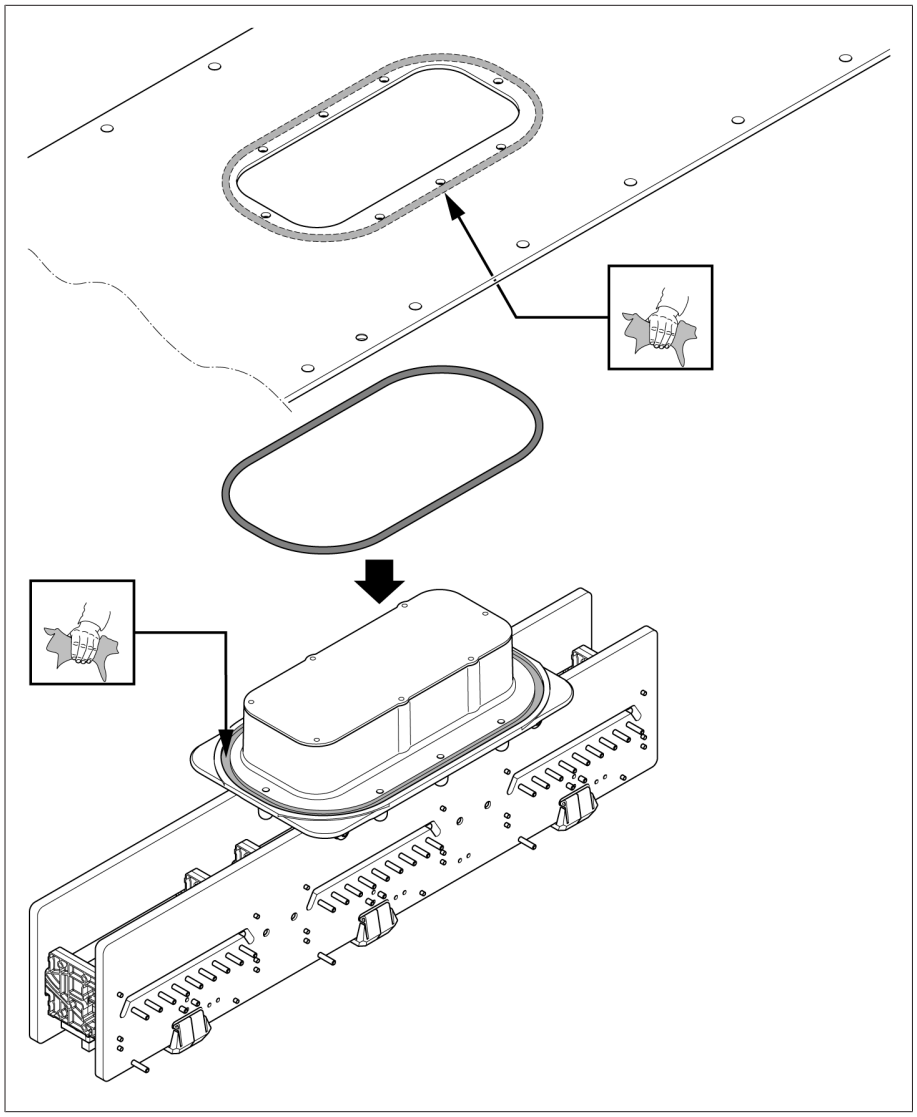

Figure 7: O-ring

3. *NOTICE!* Damage to the on-load tap-changer due to incorrect screw connections. Guide the on-load tap-changer from the inside through the opening in the transformer and affix to the transformer cover using 4 screws and locking washers. Evenly tighten the screws crosswise by hand.
4. Tighten the screws crosswise with 9 Nm. Ensure that the fastenings are not subject to mechanical stress.
5. Check the fit of the flange and o-ring for evenness.

6. Tighten the screws crosswise with 16 Nm. Ensure that the fastenings are not subject to mechanical stress.

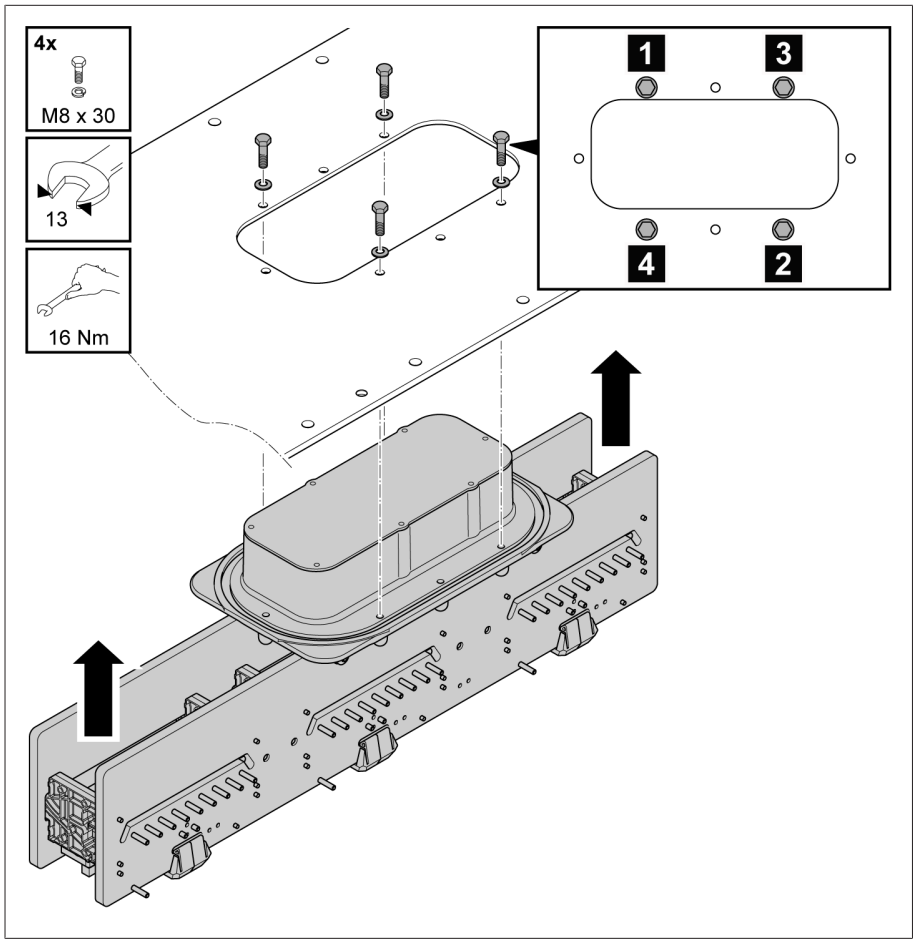

Figure 8: Fastening the on-load tap-changer

7. Before attaching the additional seal, ensure that the supplied flat gasket is correctly seated.

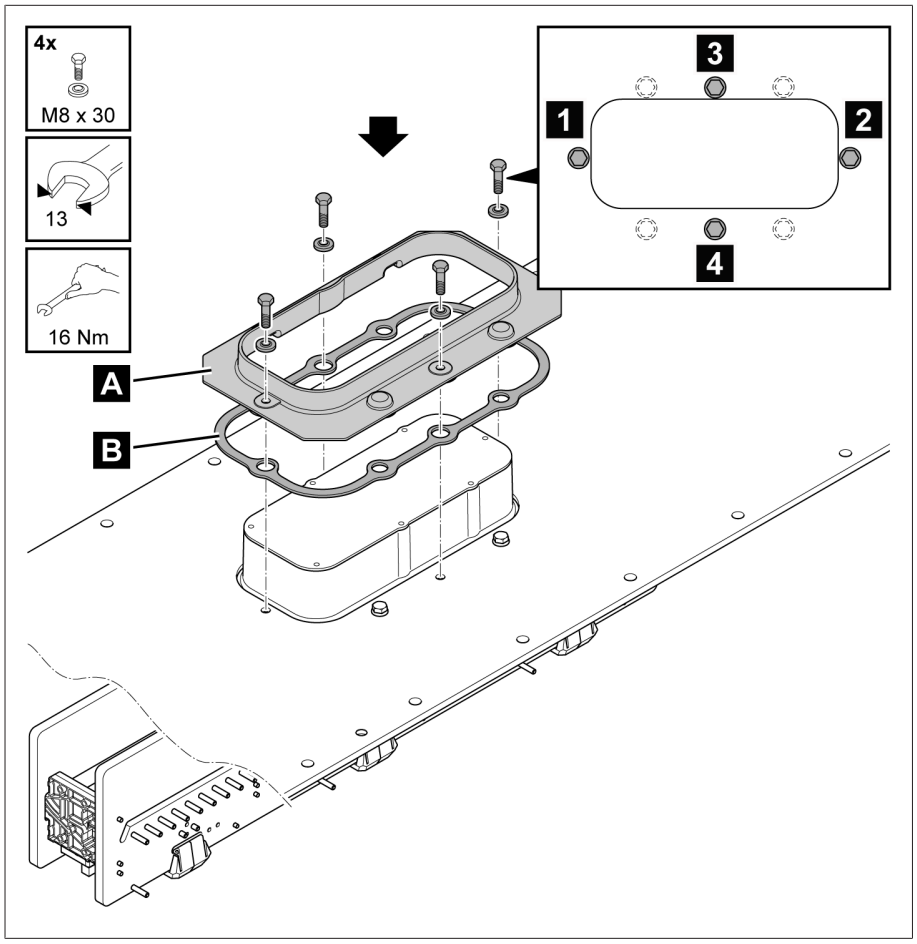

Figure 9: Additional seal and flat gasket

A	Additional seal	B	Flat gasket

8. *NOTICE!* Damage to the on-load tap-changer due to incorrect screw connections. Attach the additional seal using 4 screws and composite sealing washers. Evenly tighten the screws crosswise by hand.
9. Tighten the screws crosswise with 9 Nm and then crosswise with 16 Nm. Ensure that the fastenings are not subject to mechanical stress.

6.3 Connecting tap winding and on-load tap-changer take-off lead

NOTICE

Damage to the on-load tap-changer.

Mounting mistakes will damage the on-load tap-changer and jeopardize safe operation.

- Connect connecting leads without warping or deforming them and ensure that no forces are transferred from the connecting leads to the on-load tap-changer.
- The diagram below shows the areas particularly critical for insulation distances. Avoid laying the connecting leads in these critical areas.

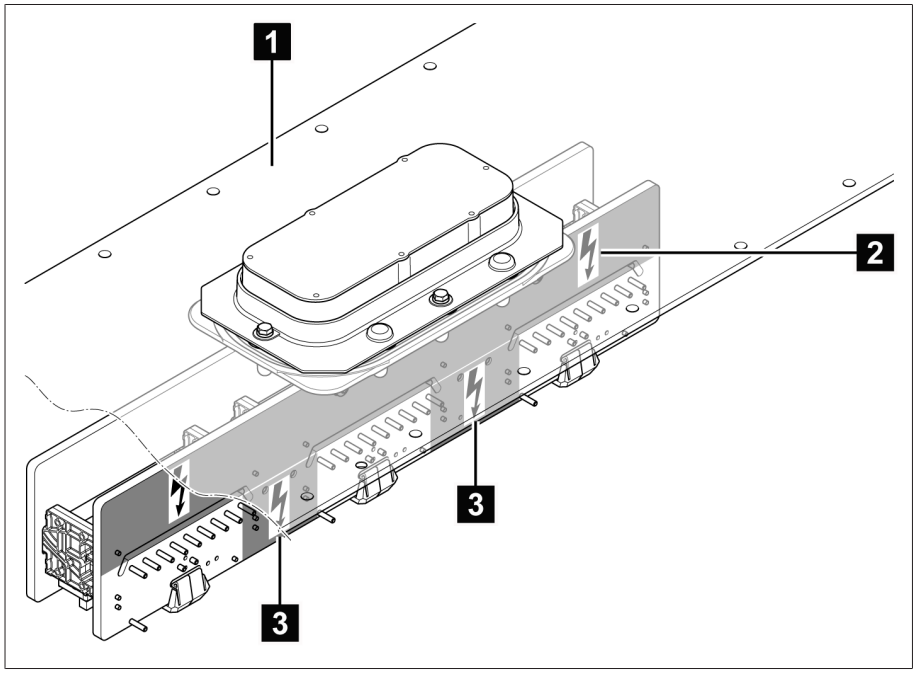

Figure 10: Insulation distances

1	Transformer cover or transformer side wall
2	Critical area: Spacing to grounded parts
3	Critical area: Spacing between the phases

NOTICE

Damage to the on-load tap-changer.

Improperly made crimp connections jeopardize safe operation.

- Make crimp connections in accordance with DIN EN IEC 61238-1-3.
- The length of the stripped part of the connecting lead may not exceed 16 mm.

- Connect the tap-winding connecting leads and on-load tap-changer take-off leads by crimping them onto the connection contacts on the on-load tap-changer and ensure that they are not subject to mechanical stress.

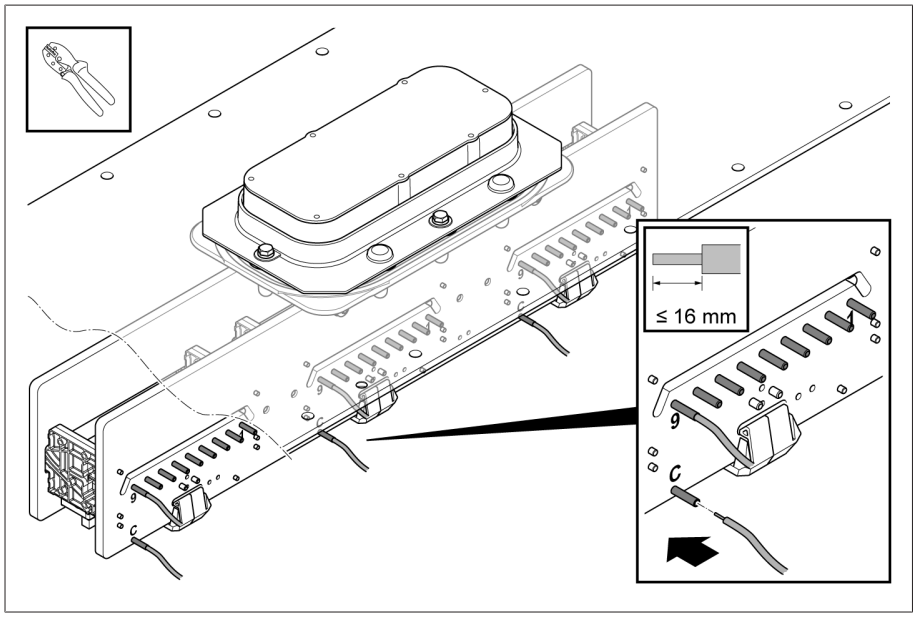

Figure 11: Connecting leads and connection contacts

6.4 Mounting motor-drive unit

Checking the operating position

The on-load tap-changer has to be in a defined operating position when mounting the motor-drive unit.

1. ⚠ DANGER! Check the operating position prior to commissioning the transformer or ensure that the transformer is de-energized and secured against reconnection. Failure to do so can lead to death or serious injuries.
2. Remove the transport locking plate and store it safely for later use. In order to prevent soiling and damage to the mechanics, do not leave the sealing module open for long periods of time.

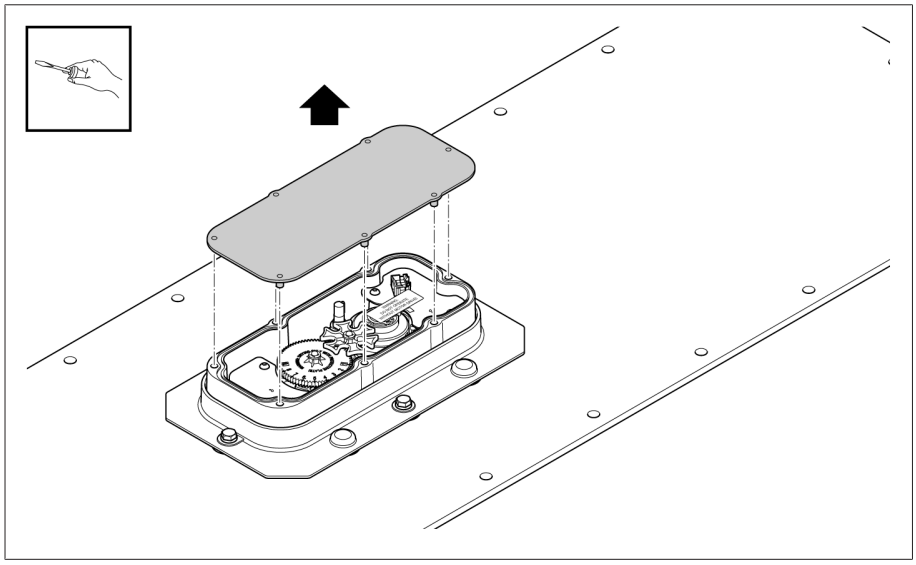

Figure 12: Removing the transport locking plate

3. Check the on-load tap-changer operating position. The current operating position is displayed by the control wheel.

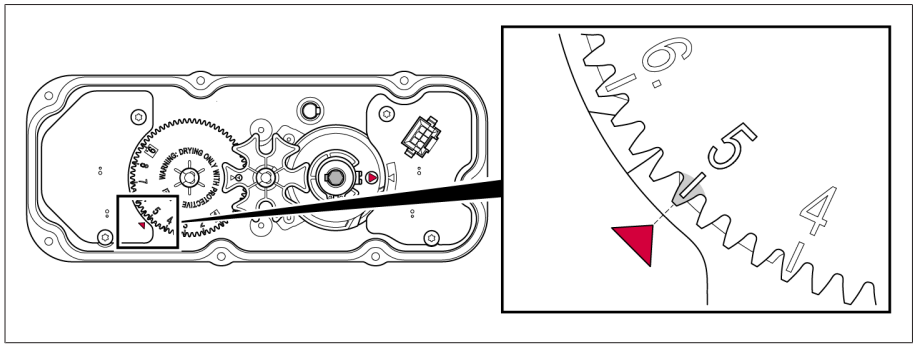

Figure 13: Checking the operating position (example illustration)

4. Also check the position of the shaft of the on-load tap-changer. If the previous on-load tap-change operation has been finished correctly, the arrow on the cam disk **1** will point to the arrow in the cover **2**.

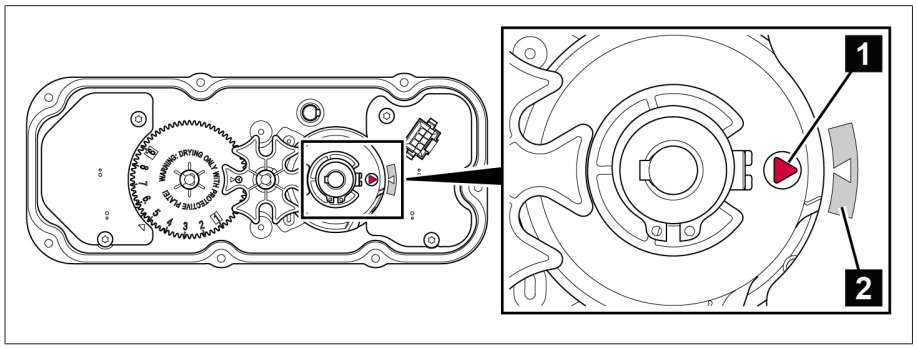

Figure 14: Position of the shaft of the on-load tap-changer

» If the shaft of the on-load tap-changer is in this position, the on-load tap-changer is in a defined operating position. If this is not the case, correct the position as described below.

5. Turn the shaft of the on-load tap-changer in the direction of the desired operating position using an Allen key, wrench size 10.

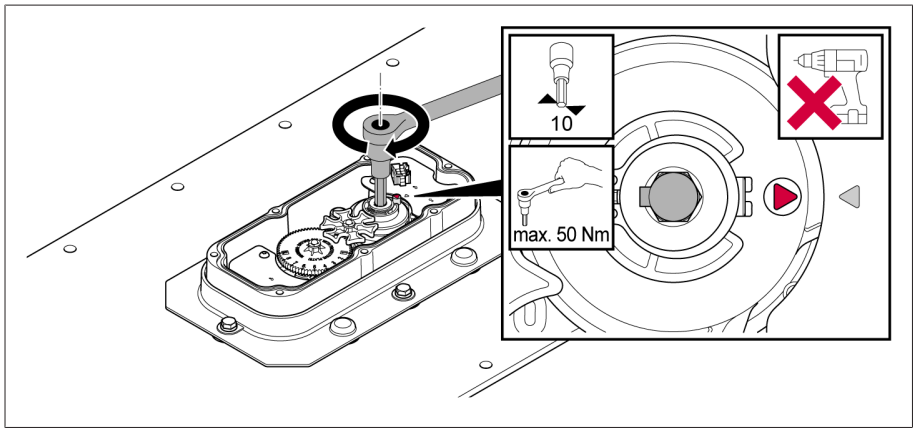

Figure 15: Emergency drive shaft operation

6. *NOTICE!* Using an Allen key, turn for every tap-change operation in one direction until one revolution has been completed and the arrow on the cam disk (1) is again pointing to the arrow in the cover (2). Otherwise, the tap-change operation has not been completed correctly, which may result in damage to the on-load tap-changer and transformer.

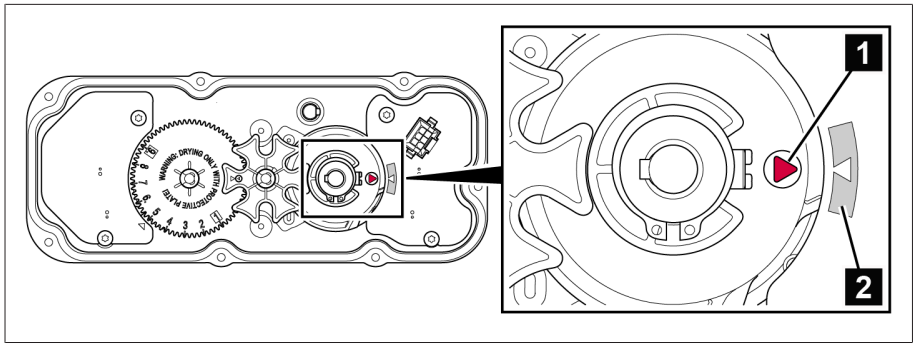

Figure 16: Position of the shaft of the on-load tap-changer

» The current operating position is displayed by the control wheel.

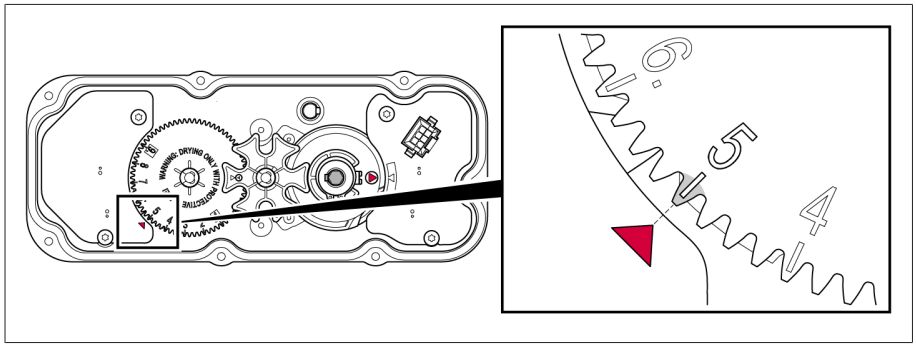

Figure 17: Checking the operating position (example illustration)

Mounting the motor-drive unit

1. Clean the sealing surfaces on the sealing module and the underside of the motor-drive unit and check that the o-ring is in the correct position.

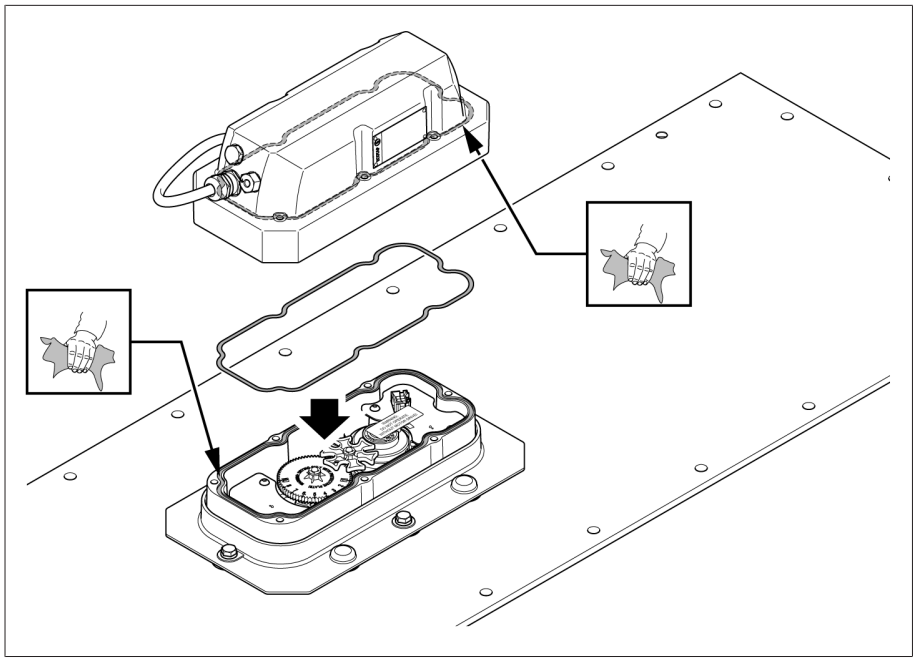

Figure 18: Cleaning the sealing surfaces of the motor-drive unit

2. Ensure that the feather key is seated correctly.

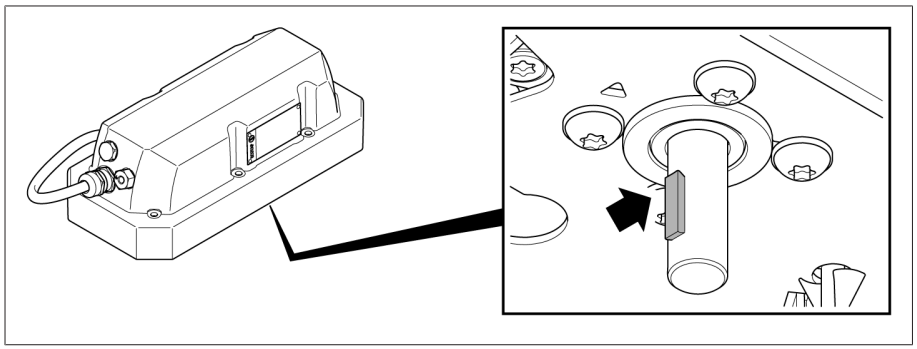

Figure 19: Checking that the feather key is seated correctly

Ensure that the motor-drive unit and the on-load tap-changer are aligned as described below. If mounting in the way described is not possible, contact the Maschinenfabrik Reinhausen GmbH Technical Service team.

3. Check the position of the motor-drive unit. If mounted incorrectly, the motor-drive unit may be damaged. The feather key **1** of the motor shaft must be facing the mark **2**. If this is not the case, contact MR Service.

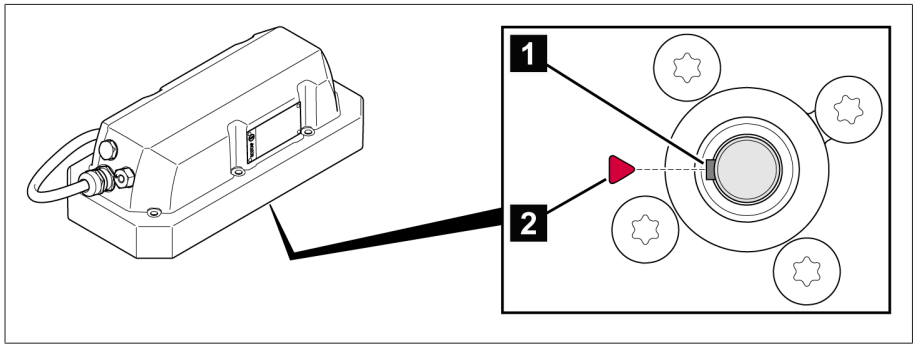

Figure 20: Checking the position of the motor-drive unit

4. Checking the position of the on-load tap-changer: The mark on the cam disk **1** must be in the marked area on the cover **2**. If not, correct the position as described in the "Actuating the on-load tap-changer in emergency operation" [▶Section 8.3, Page 63] section.

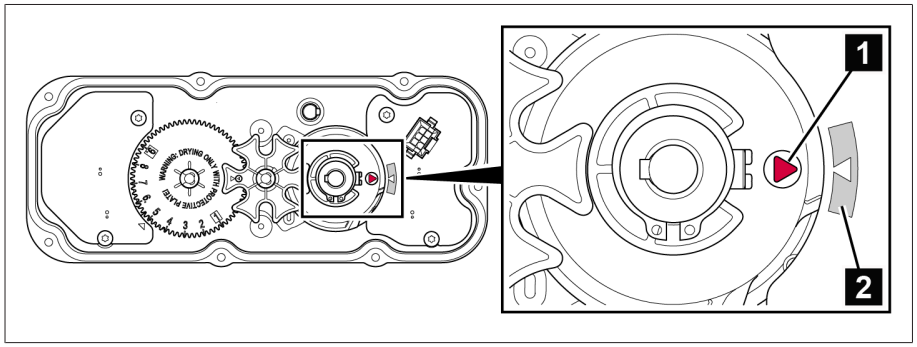

Figure 21: Checking the position of the on-load tap-changer

5. Attach the motor-drive unit to the sealing module.

6. *NOTICE!* Attach the motor-drive unit without warping or deforming; to do so, gradually tighten the screws crosswise. Otherwise the motor-drive unit is not correctly connected to the on-load tap-changer, which may result in damage to the on-load tap-changer and transformer.

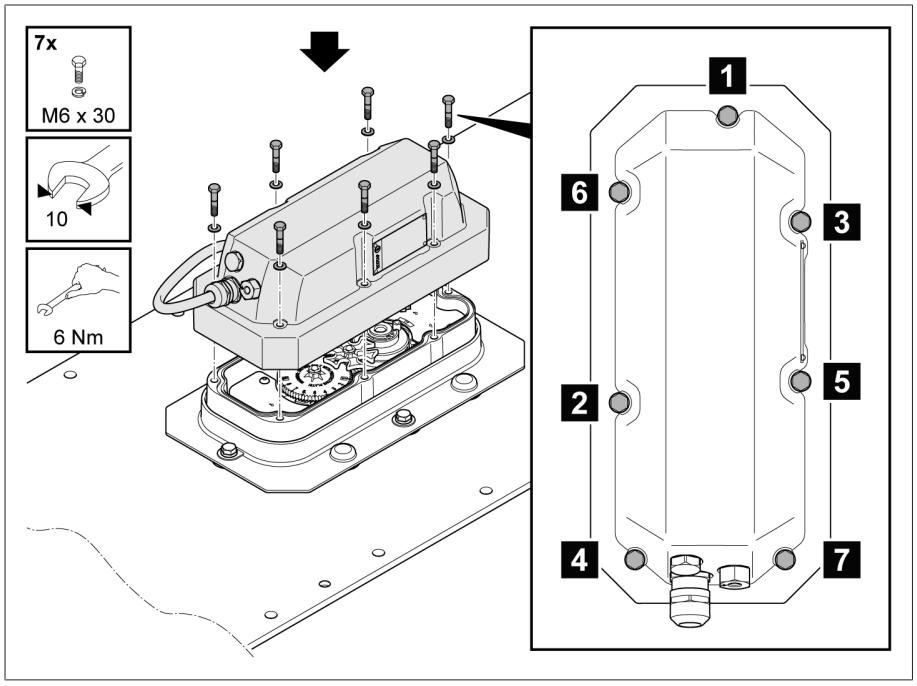

Figure 22: Mounting the motor-drive unit

7. Establish potential equalization between the motor-drive unit and the transformer using a grounding cable or grounding strap (≥ 16 mm² Cu). Connect the potential equalization conductor to the ground connection of the motor-drive unit using an M8x10 screw.

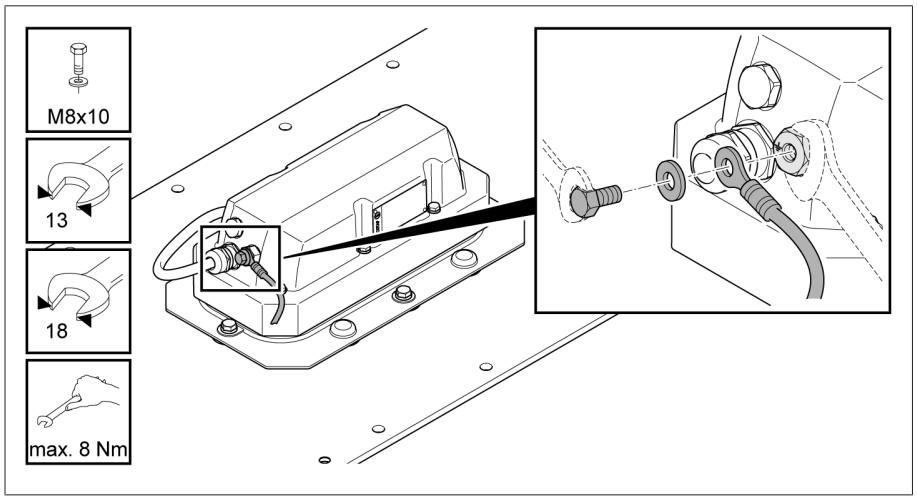

Figure 23: Motor-drive unit grounding

Perform an automatic adjustment [▶Section 8.4.13.1, Page 90] each time the motor-drive unit is replaced or mounted.

6.5 Connecting control unit at the transformer manufacturer's site

This section describes how you connect the control unit before initial commissioning. The connection and mounting of the control unit for permanent operation are described in the chapter "Commissioning the transformer at the installation site" [▶Section 7.3, Page 48].

⚠ DANGER

Risk of fatal injury due to electrical voltage!
Danger of death due to electrical voltage when assembling and connecting the device.
› De-energize the device and system peripherals and lock them to prevent them from being switched back on.

6.5.1 Cable recommendation

Please note the following recommendation from Maschinenfabrik Reinhausen GmbH when wiring the device:

Connection	Terminal	Cable type	Conductor cross-section	Max. length
Power supply and voltage measurement	X1	Unshielded	1.5 mm² with ferrule 2.5 mm² without ferrule	-
Blocking contact	X3			-
Customer messages	X5			-
RS485; SUB-D	X6	Shielded	0.25 mm²	500 m
Current transformer input	X7	Unshielded	2.5 mm² with ferrule	
MR service interface	X8	Must be kept clear	-	-
Control unit grounding		Grounding cable	≥6 mm² Cu	
Motor-drive unit grounding		Grounding cable or grounding strap	≥16 mm² Cu	
Optional control cabinet grounding	-	Grounding cable or grounding strap	≥16 mm² Cu	-

Table 7: Recommendation for connection cables

NOTICE! Attach all supplied connectors to the control unit to ensure IP30 degree of protection. Do not connect anything to the terminal for X8. Otherwise malfunctions may occur.

The connection cable between the motor-drive unit and the control unit is supplied as standard.

⚠ DANGER

Danger of explosion!
An impermissibly long connection cable between the motor-drive unit and control unit can lead to malfunctions of the motor-drive unit and the on-load tap-changer. This allows the on-load tap-changer to remain in an impermissible operating position. This can lead to an explosion in the transformer.
› Only use the connection cable provided.
› The connection cable may not be altered.

6.5.2 Connecting motor-drive unit and voltage supply

All-pole isolating device

You may connect the control unit only to circuits with an external overcurrent protection device and an all-pole isolating device, enabling the equipment to be fully de-energized if required (service, maintenance, etc.).

Suitable equipment includes isolating devices in accordance with IEC 60947-1 and IEC 60947-3 (e.g. circuit breakers). Observe the properties of the relevant circuits (voltage, maximum currents) when selecting the circuit breaker type. In addition, observe the following:

- It must be easy for the operator to access the isolating device
- The isolating device must be labeled for the device and the circuits to be isolated
- The isolating device may not be a part of the power line
- The isolating device may not interrupt the main protective conductor

You must connect the power supply circuit with a conductor cross-section of at least 1.5 mm^2 (AWG 16) and protect it with a C10A or B10A type miniature circuit breaker.

Supply via voltage transformers

⚠ DANGER

Electric shock!

If you supply power to the device via a voltage transformer, the output voltage of the voltage transformer has no bearing on the protective conductor. As a result, protection of the device against electric shock in the event of an error is not guaranteed.

› Take appropriate measures to protect against electric shock according to IEC 61140 and the local connection regulations.

Further conditions:

- Assurance that there are no voltage drops in the converter under load to ensure regular operation.
- For the correct dimensioning of the voltage transformer, observe the information in the section "Technical data of the control unit" [▶Section 15.6, Page 138].
- The measurement accuracy is influenced by the measuring error of the voltage transformer.
- During the energy accumulator charging process, the measuring error of the voltage transformer can increase significantly. The charging process for the energy accumulator takes approx. 35 s during initial charging and approx. 0.3 s after each on-load tap-change operation.
- The transmission ratio of the voltage transformer must be taken into consideration when setting the desired value.

The transmission ratio influences the voltage measurement value shown in the display. Conversion within the controller is not possible.

Connecting the control unit

Note the connection diagram provided.

1. Connect the 5-wire connection cable of the motor-drive unit to terminal X4 (0.4 Nm).
2. Connect the 2-wire connection cable of the motor-drive unit to terminal X2 (0.5 Nm).

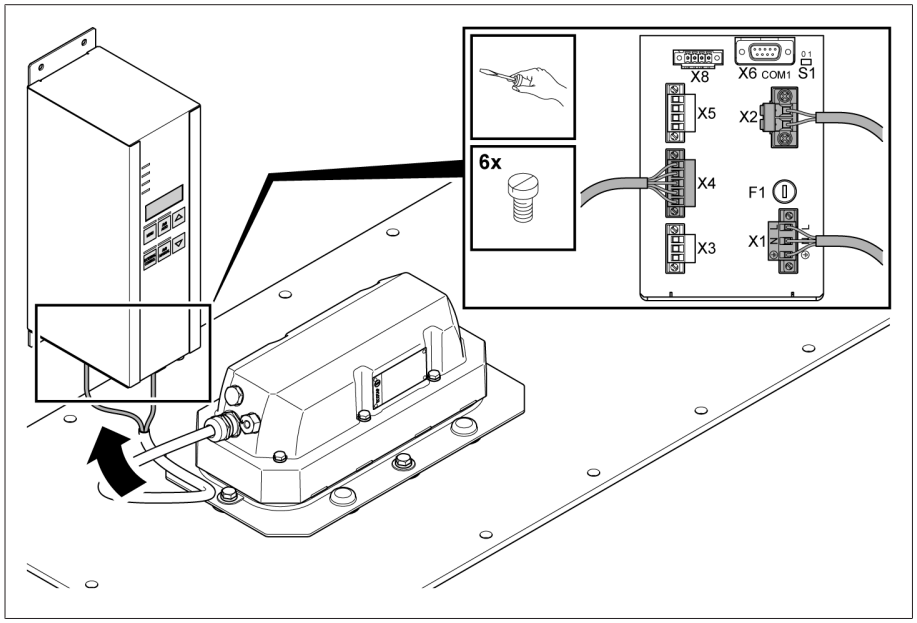

Figure 24: Connection cable connection

3. ⚠ DANGER! Ensure that the connections PE, N, and L are not interchanged. Otherwise, dangerously high voltages could occur at the housing. Tighten (0.5 Nm) the control unit power supply to the plug connector for X1 in accordance with the supplied connection diagram. In addition, use the green cable housing supplied for touch protection.
4. The plug connector for X1 is coded. Carry out the installation without using force. Connect the plug connector to terminal X1 correctly according to the device labeling and screw it tight with 0.5 Nm.

6.6 Taking measurements

⚠ WARNING

Electric shock from incorrect operation!

Danger of death or serious injury from electric shock!

- Only take measurements when the transformer is de-energized.
- Only perform tap-change operation with the control unit.
- Tap-change operations initiated by manual actuation of the drive shaft are not permitted during this test.

NOTICE

Damage to on-load tap-changer and motor-drive unit!

Damage to on-load tap-changer and transformer due to improper transformer ratio test!

- Do not perform more than 100 on-load tap-change operations without a full oil fill.
- Only switch on-load tap-changer with the help of the control unit.
- Emergency drive shaft operation only permissible for fault elimination. Never operate the drive shaft with a drill.

Performing an automatic adjustment

Perform an automatic adjustment [▶Section 8.4.13.1, Page 90] prior to performing the transformer ratio test and DC resistance measurement.

Performing the transformer ratio test

1. Press AVR MANUAL on the control unit to activate manual mode.
   » The LED above the key lights up.

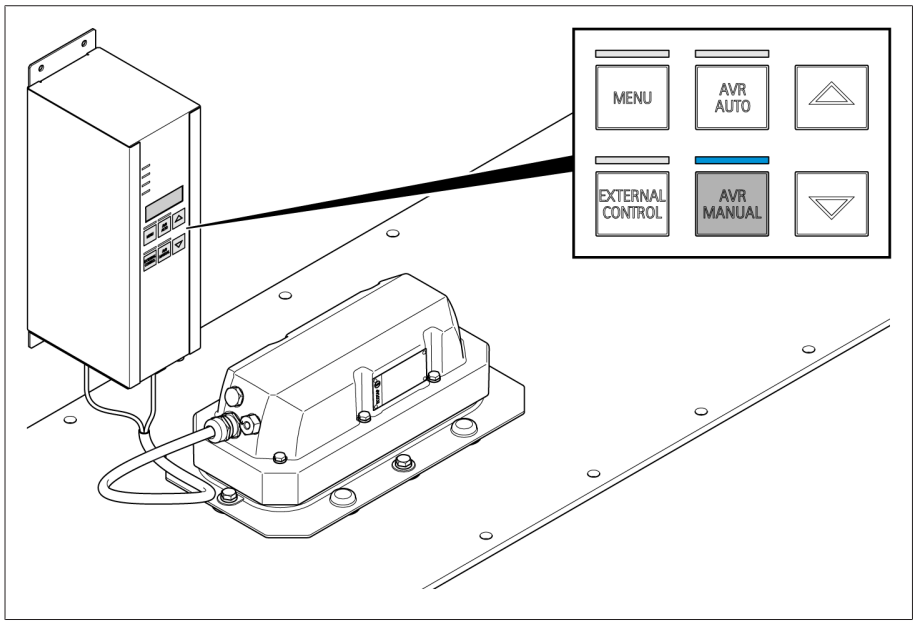

Figure 25: Activating manual mode

2. Press ▲ or ▼ until the desired operating position is reached.
   » The new operating position is displayed on the control unit.
3. Carry out the transformer ratio test in all operating positions.

» Once the results have been checked, the transformer ratio test is complete.

i Check the transformer configuration in accordance with the supplied connection diagrams if the tap-change operation is not in the desired direction. The behavior of the control unit (lowest voltage at the smallest or largest position) can be adjusted accordingly via parameterization. To do so, follow the description in the ECOTAP® VPD® MD&C motor-drive unit operating instructions, section "Inverting travel commands".

Performing the DC resistance measurement

NOTICE

Damage to the on-load tap-changer.

Excessive measurement currents overload the contacts of the on-load tap-changer and thus cause damage to the on-load tap-changer.

› Ensure that the maximum permissible measurement currents specified in the following table are not exceeded.

› Perform the DC resistance measurement in various on-load tap-changer operating positions in accordance with the following table.

Transformer tank status	Maximum permissible measured current
Transformer tank empty	Maximum 10 A DC
Transformer tank filled with insulating oil	Maximum 10 A DC

Table 8: Maximum permissible measured currents

1. Press AVR MANUAL on the control unit to activate manual mode.
   » The LED above the key lights up.
2. Switch the on-load tap-changer through the complete regulating range using the buttons ⏶ and ⏷ to remove any potential foreign-particle build ups on the contacts.
   » The operating position will be displayed on the control unit.
3. Perform the DC resistance measurement in all operating positions.

» Once the results have been checked, the DC resistance measurement is complete.

6.7 Drying the on-load tap-changer

NOTICE

Damage to the on-load tap-changer, motor-drive unit and control unit.

If temperature-sensitive components are dried, they may become damaged.

› Remove the motor-drive unit and the control unit and do not dry.
› Affix the transport locking plate prior to drying to protect the on-load tap-changer.
› Ensure that the temperature of the on-load tap-changer does not exceed 135 °C.
› Ensure that low-frequency drying is carried out with a maximum factor of 2x the rated through-current.

Removing the motor-drive unit and the control unit

1. ⚠ DANGER! Risk of fatal injury due to electrical voltage. Ensure that all cables in the working area are de-energized and that the shutdown equipment is locked so that it cannot be switched on again.
2. Remove the plug connectors from the terminals X1, X2 and X4 on the control unit.

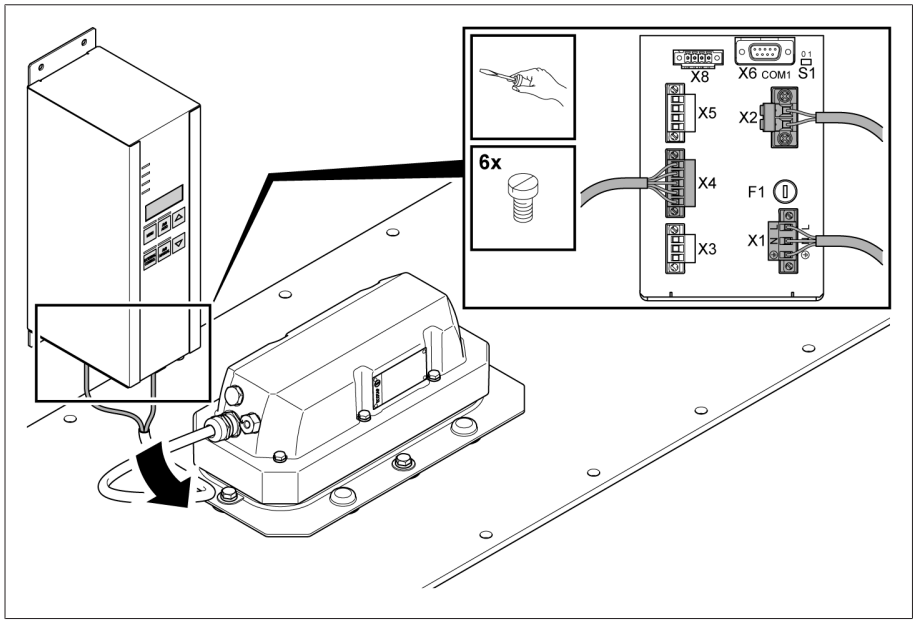

Figure 26: Disconnecting the connection cable

3. Coil the connection cable and secure it on the motor-drive unit.

4. Remove the motor-drive unit.

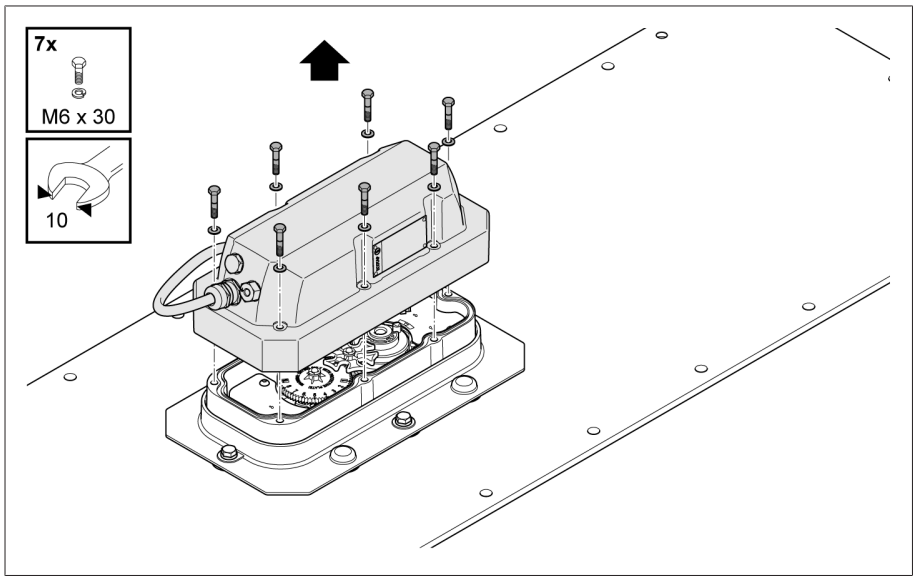

Figure 27: Removing the motor-drive unit

5. Clean the sealing surfaces on the sealing module and the transport locking plate and check that the o-ring is in the correct position.
6. Affix the transport locking plate.

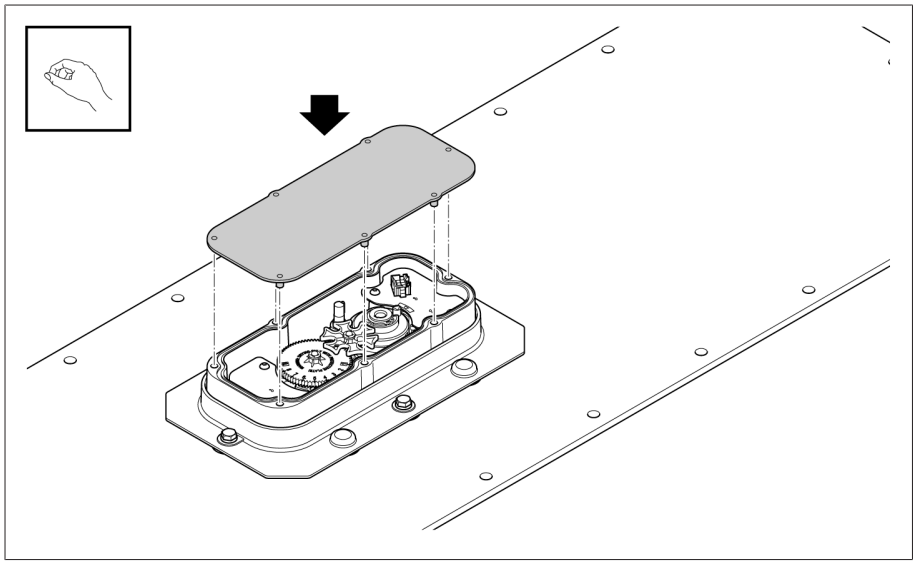

Figure 28: Transport locking plate

Drying the on-load tap-changer

You can dry the on-load tap-changer using one of the following methods. The drying time depends on the transformer.

- Vacuum-drying
  - In a furnace
  - In the transformer tank
- Low-frequency drying with a maximum factor of 2x the rated through-current:
  - In a furnace
  - In the transformer tank

6.8 Filling transformer with oil

For the oil filling of the transformer, use new mineral insulating oil for transformers as per IEC 60296 (Specification of unused mineral insulating oils for transformers and switchgear).

If approved by the transformer manufacturer, synthetic ester liquids as per IEC 61099 (Specification for unused synthetic organic esters for electrical purposes) or natural ester liquids as per IEC 62770 (Specification for unused natural esters for transformers and similar electrical equipment) can be used as alternatives.

Contact Maschinenfabrik Reinhausen GmbH if you want to use other insulating fluids.

Observe the permitted temperature range of the transformer oil in the "Technical data" section.

NOTICE

Damage to the on-load tap-changer.

If a transformer is not completely filled with oil, the on-load tap-changer may be damaged!

› Before commissioning the on-load tap-changer, completely fill the transformer with oil.

1. Completely fill the transformer with oil.
2. Take an oil sample from the transformer.
3. Record the temperature of the oil sample just after the sample is taken.
4. Determine dielectric strength and water content at an oil temperature of 20 °C ±5 °C. The dielectric strength and water content must comply with the limit values stated listed in section Limit values for dielectric strength and water content of insulating fluids [▶Section 15.5, Page 137].

7 Commissioning

7.1 Commissioning the on-load tap-changer at the transformer manufacturer's site

⚠ WARNING

Flying parts and spraying of hot oil resulting from on-load tap-changer overload!

The on-load tap-changer can switch currents of up to twice the rated through-current. Higher currents occur when activating transformers (inrush current impulse) or in the event of short-circuits, for example. Higher voltages may occur due to transformer overexcitation following load shedding, for example.

Danger of death or severe injury due to flying parts and spraying of hot oil!

- Ensure that the on-load tap-changer is not overloaded.
- Prevent on-load tap-change operations if higher currents arise.
- Ensure that the rated step voltage is not exceeded. The rated step voltage may be briefly exceeded by up to 10% as long as the rated through-current is not exceeded.
- Ensure that the temperature limit values stated in the technical data are not exceeded.

NOTICE

Damage to on-load tap-changer resulting from switching without oil!

Performing too many operations without a complete transformer oil fill will damage the on-load tap-changer!

- Do not perform more than 100 on-load tap-change operations without a full oil fill.
- Emergency drive shaft operation only permissible for fault elimination. Never operate the drive shaft with a drill.

Checking the correct position of the on-load tap-changer and motor-drive unit

⚠ DANGER

Danger of explosion!

An incorrect position of the on-load tap-changer or the motor drive shaft can lead to malfunction and, consequently, to an overload of the on-load tap-changer. This overload can lead to an explosion in the transformer.

- Carry out automatic adjustment and trial tap-change operations on a voltage-free transformer.
- Supply the controller and motor-drive unit via a separate voltage source during these tests.
- If a separate voltage source is not available, it is imperative that the correct position of the on-load tap-changer and motor-drive unit be checked again according to the section "Mounting the motor drive" before these tests.

1. Ensure that the motor-drive unit is positioned correctly: The feather key **1** on the motor-drive unit must be facing the marking **2**:

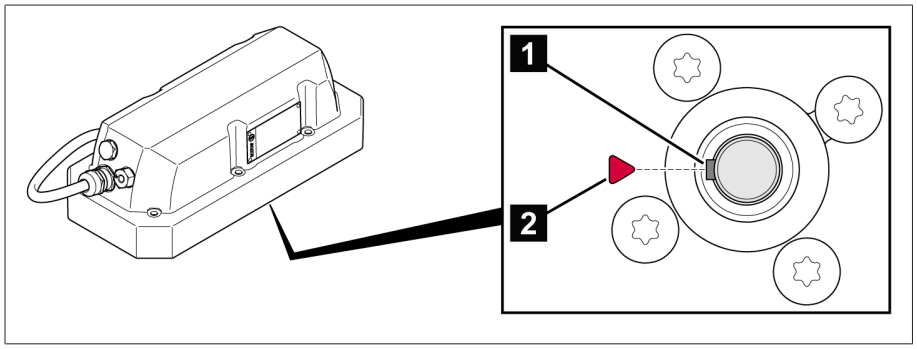

Figure 29: Checking the position of the motor-drive unit

2. Ensure that the on-load tap-changer is positioned correctly: The marking on the cam disk **1** must be within the marked range of the cover **2**:

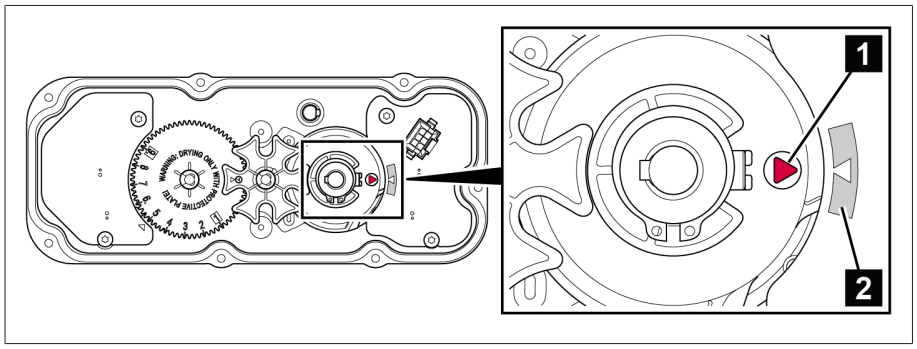

Figure 30: Checking the position of the on-load tap-changer

3. Mount and connect motor-drive unit and control unit.

Commissioning

NOTICE

Damage to device and system periphery

An incorrectly connected device can cause damage to the device and system periphery.

- Check the entire configuration before commissioning.
- Make sure that the supply voltage (= measured voltage) corresponds to the specifications in the technical data.

1. Activate power supply for motor-drive unit and control unit.
   - The control unit starts automatically. The ⏻ LED flashes for 10 s to indicate the inrush interlock. After 10 s, this LED lights up blue continuously.
   - The 🔋 LED also starts by flashing and then lights up continuously as soon as the internal energy accumulator is fully charged.
   - At the same time, the red ⚠ LED on the control unit lights up and the event code *E4* appears on the display to indicate that adjustment is necessary.
2. Carry out "Automatic adjustment" [▶Section 8.4.13.1, Page 90].

7.1.1 Performing trial tap-change operations

Before you activate the transformer, you must carry out trial tap-change operations to check the mechanical and electrical functions of the on-load tap-changer and the motor-drive unit.

✓ You have already carried out automatic adjustment [▶Section 8.4.13.1, Page 90] of the on-load tap-changer and the motor-drive unit.

1. Press AVR MANUAL to activate the AVR MANUAL operating mode.
   » The status LED above the key lights up.

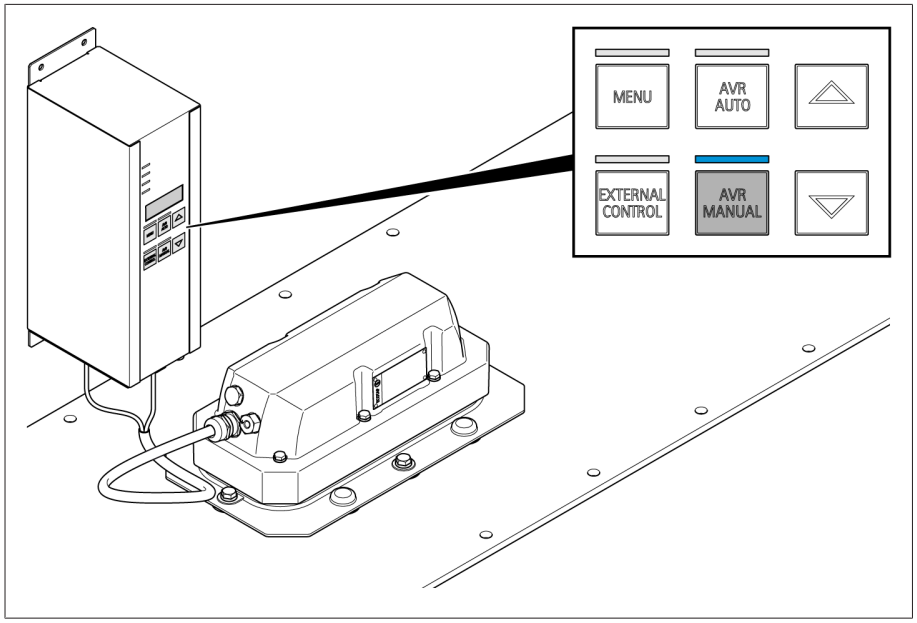

Figure 31: Activating manual mode

2. Use the RAISE/LOWER arrow keys to undertake trial tap-change operations across the entire range of settings.
3. Check that the control unit records and correctly displays every position. Otherwise, carry out automatic adjustment again.

The control ensures that the required cooling time of approx. 3 seconds is maintained after each on-load tap-change operation. During this time, the control will not accept any tap-change commands.

7.1.2 Tests on the transformer

Please contact Maschinenfabrik Reinhausen GmbH (MR) if any aspect of the tests is not clear.

7.1.2.1 Electrical high-voltage tests on the transformer

⚠ WARNING

Danger of death or severe injury from explosive gases when testing the transformer!

Danger of death from flying debris and spraying of hot oil if incorrect action is taken when explosive gases accumulate under the transformer cover, in the piping, in the oil conservator, and at the dehydrating breather opening!

- Ensure that there are no naked flames, hot surfaces or sparks (for example caused by static charging) in the immediate surroundings and that none occur.
- Ensure that the on-load tap-changer is fully submerged in oil.
- Only use conductive and grounded hoses, pipes, and pump equipment that are approved for flammable liquids.
- Ensure that all safety equipment is ready for use.
- Use suitable personal protective equipment/clothing.
- Keep away from the danger area during the transformer test.
- Observe applicable fire protection regulations.
- Make sure that only trained technicians perform work on the transformer.

Every on-load tap-changer has been specially designed by the manufacturer for the transformer in the respective purchase order and is subjected to strict tests and quality controls at the manufacturer's factory.

However, joint operation of transformer and on-load tap-changer cannot be simulated by the manufacturer and cannot be tested on the on-load tap-changer alone.

For this reason, irregularities or malfunctions cannot be completely ruled out during the transformer test (i.e. testing the first joint operation of transformer and on-load tap-changer).

It is essential that you ensure only trained, instructed expert personnel who are familiar with and comply with the pertinent safety and technical regulations, who are aware of the potential risks, and who consistently use the occupational safety equipment provided to prevent injury and property damage are assigned to perform such a transformer test.

Remove all leads used for testing before the high voltage test as these function as antennas. Ensure that the clearance needed between bushings and motor-drive unit, including the connection cable, is observed at all times.

If you have any questions about possible sources of danger, consult the manufacturer before starting to test the transformer.

Only undertake the electrical tests required for transformer acceptance once the aforementioned work is complete.

7.1.2.2 Resetting automatic adjustment

Reset the automatic adjustment prior to transporting the transformer to the installation site. This ensures that automatic adjustment is carried out again during commissioning at the installation site.

To reset the automatic adjustment, proceed as follows:

✓ The AVR MANUAL operating mode is active.

1. Press MENU.
2. Press ▲ + ▼ for longer than 5 seconds.

» 0

3. Press ⏢ until code 3 is displayed.
   » 3
4. Press AVR MANUAL to confirm the selection.
   » The LED ⚠ lights up and event code E4 is displayed.

7.1.2.3 Dielectric tests on transformer wiring

The motor-drive unit and control unit are subjected to dielectric tests before delivery. Another dielectric test is not necessary.

1. ⚠ DANGER! Ensure that all cables in the working area are de-energized and that the shutdown equipment is locked so that it cannot be switched on again. If this is not done, there is a risk of fatal injury due to electrical voltage.
2. *NOTICE!* Ensure that the dielectric test of the transformer wiring is only performed when the control unit is completely disconnected. Otherwise, it will be damaged.

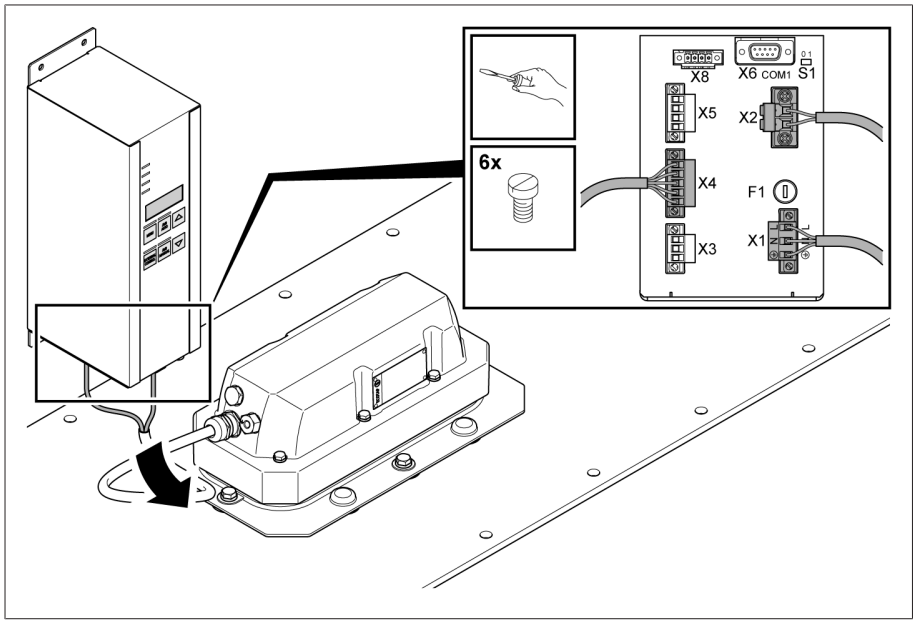

Figure 32: Connection cable

1. Remove the plug connector from terminal X1 on the control unit.
2. Remove the plug connector from terminal X2 on the control unit.
3. Remove the plug connector from terminal X4 on the control unit.

> The 🔋 LED can remain lit for up to 30 minutes after the voltage supply is disconnected. This indicates that the energy accumulator is still charged. This does not represent a hazard during mounting or removing the control unit.

4. Wind up the connection cable and secure it on the motor-drive unit.
5. Carry out dielectric tests on the transformer wiring.

7.2 Transporting the transformer

⚠ DANGER

Risk of life-threatening injury due to electric shock!

If the device and system peripherals are not disconnected from the mains, electric shock may occur!

› De-energize the device and system peripherals and lock them to prevent them from being switched back on.

NOTICE

Damage to the on-load tap-changer.

Damage to the on-load tap-changer due to incorrect positioning!

› Do not disconnect the motor-drive unit from the on-load tap-changer after the on-load tap-changer's automatic adjustment.

1. To transport the transformer, disconnect the connection cable from the control unit. You will find a description of this process in the "Dielectric tests on the transformer wiring" [▶Section 7.1.2.3, Page 47] section.
2. *NOTICE!* Damage to the motor-drive unit due to moisture ingress. Coil the connection cable, secure it on the motor-drive unit and use plastic film and adhesive tape to protect it from moisture.
3. *NOTICE!* Damage to the control unit due to incorrect transportation or storage. Transport the control unit in the MR packaging used for delivery. Do not transport or store the control unit in the open.

7.3 Commissioning transformer

⚠ WARNING

Flying parts and spraying of hot oil resulting from on-load tap-changer overload!

The on-load tap-changer can switch currents of up to twice the rated through-current. Higher currents occur when activating transformers (inrush current impulse) or in the event of short-circuits, for example. Higher voltages may occur due to transformer overexcitation following load shedding, for example.

Danger of death or severe injury due to flying parts and spraying of hot oil!

› Ensure that the on-load tap-changer is not overloaded.
› Prevent on-load tap-change operations if higher currents arise.
› Ensure that the rated step voltage is not exceeded. The rated step voltage may be briefly exceeded by up to 10% as long as the rated through-current is not exceeded.
› Ensure that the temperature limit values stated in the technical data are not exceeded.

To commission the on-load tap-changer, carry out the following steps:

1. Mount and connect motor-drive unit and control unit.

2. Commission motor-drive unit and control unit.

3. Carry out automatic adjustment and trial tap-change operations.

4. Check control parameters and automatic voltage regulation.

5. When operating with alternative insulating fluids, activate temperature blocking.

The following chapters describe the steps in detail. In addition, further steps necessary for commissioning the transformer at the operating site are added. Optionally, the transformer can be connected to the grid at the operating site with the on-load tap-changer ready for operation.

7.3.1 Checking the correct position of the on-load tap-changer and motor-drive unit

⚠ DANGER

Danger of explosion!

An incorrect position of the on-load tap-changer or the motor drive shaft can lead to malfunction and, consequently, to an overload of the on-load tap-changer. This overload can lead to an explosion in the transformer.

- Carry out automatic adjustment and trial tap-change operations on a voltage-free transformer.
- Supply the controller and motor-drive unit via a separate voltage source during these tests.
- If a separate voltage source is not available, it is imperative that the correct position of the on-load tap-changer and motor-drive unit be checked again according to the section "Mounting the motor drive" before these tests.

1. Ensure that the motor-drive unit is positioned correctly: The feather key **1** on the motor-drive unit must be facing the marking **2**:

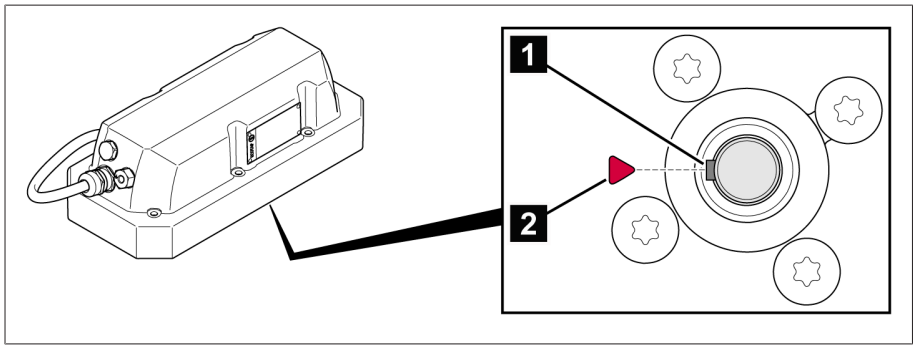

Figure 33: Checking the position of the motor-drive unit

2. Ensure that the on-load tap-changer is positioned correctly: The marking on the cam disk **1** must be within the marked range of the cover **2**:

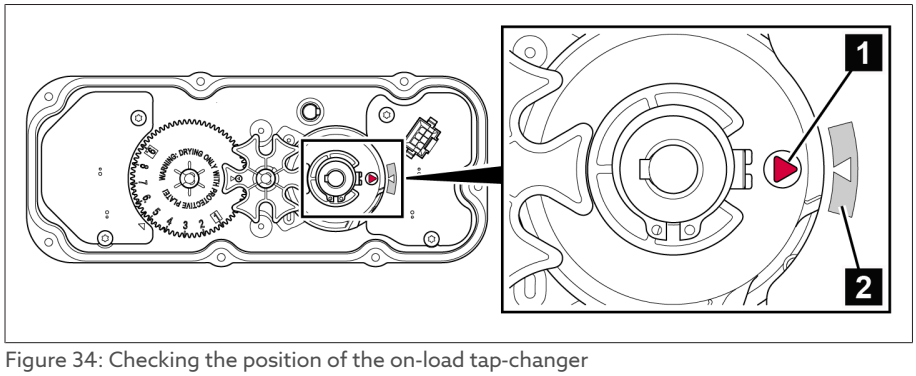

Figure 34: Checking the position of the on-load tap-changer

For further details, see section "Mounting the motor-drive unit [▶Section 6.4, Page 31]".

7.3.2 Mounting the control unit on an even surface

1. Secure the control unit to the even surface using the fixing brackets provided for this purpose. Note the dimensional drawing in the appendix.
2. Use one of the lower attachment points to ground the control unit housing. To do so, crimp a grounding conductor (minimum cross-section 8 mm²) with a ring-type cable terminal and attach it with washers (contact washer and safety washer) and M6 bolt.

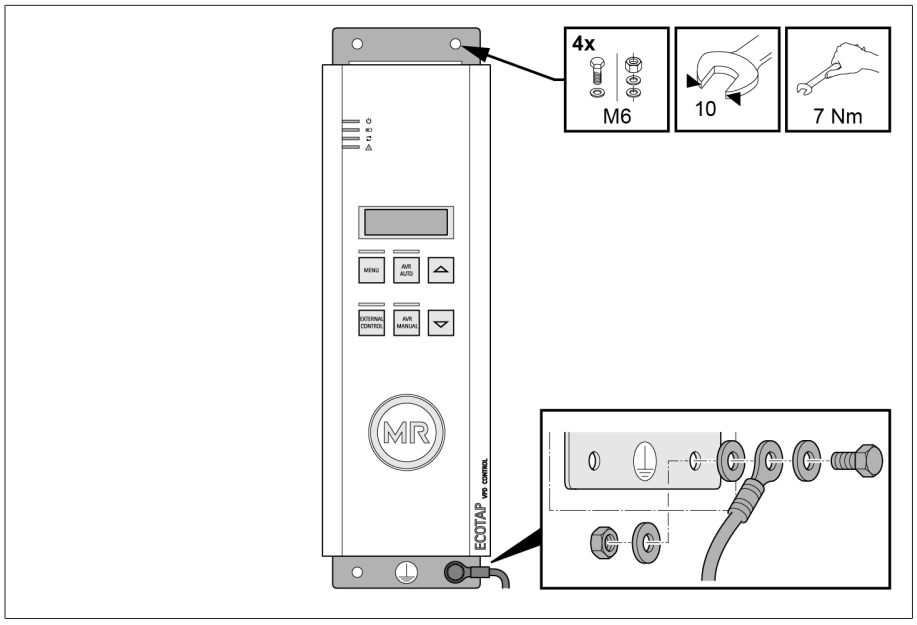

Figure 35: Mounting the control unit

7.3.3 Connecting the control unit

The following section describes how to make the electrical connection to the control unit.

⚠ DANGER

Risk of fatal injury due to electrical voltage!

Danger of death due to electrical voltage when assembling and connecting the device.

› De-energize the device and system peripherals and lock them to prevent them from being switched back on.

7.3.3.1 Cable recommendation

Please note the following recommendation from Maschinenfabrik Reinhausen GmbH when wiring the device:

Connection	Terminal	Cable type	Conductor cross-section	Max. length
Power supply and voltage measurement	X1	Unshielded	1.5 mm² with ferrule 2.5 mm² without ferrule	-
Blocking contact	X3			-
Customer messages	X5			-
RS485; SUB-D	X6	Shielded	0.25 mm²	500 m
Current transformer input	X7	Unshielded	2.5 mm² with ferrule	
MR service interface	X8	Must be kept clear	-	-
Control unit grounding		Grounding cable	≥6 mm² Cu	

Connection	Terminal	Cable type	Conductor cross-section	Max. length
Motor-drive unit grounding		Grounding cable or grounding strap	≥16 mm² Cu	
Optional control cabinet grounding	-	Grounding cable or grounding strap	≥16 mm² Cu	-

Table 9: Recommendation for connection cables

NOTICE! Attach all supplied connectors to the control unit to ensure IP30 degree of protection. Do not connect anything to the terminal for X8. Otherwise malfunctions may occur.

The connection cable between the motor-drive unit and the control unit is supplied as standard.

⚠ DANGER

Danger of explosion!

An impermissibly long connection cable between the motor-drive unit and control unit can lead to malfunctions of the motor-drive unit and the on-load tap-changer. This allows the on-load tap-changer to remain in an impermissible operating position. This can lead to an explosion in the transformer.

› Only use the connection cable provided.
› The connection cable may not be altered.

7.3.3.2 Electromagnetic compatibility

The device has been developed in accordance with applicable EMC standards. The following points must be noted in order to meet the EMC standards.

7.3.3.2.1 Wiring requirement of installation site

Note the following when selecting the installation site:

- The system's overvoltage protection must be effective.
- The system's ground connection must comply with all technical regulations.
- Separate system parts must be joined by a potential equalization.

7.3.3.2.2 Wiring requirement of operating site

Note the following when wiring the operating site:

- Route the connecting leads in grounded metal cable ducts.
- Do not route lines which cause interference (for example power lines) and lines susceptible to interference (for example signal lines) in the same cable duct.
- Maintain a clearance of at least 100 mm between lines causing interference and lines susceptible to interference.

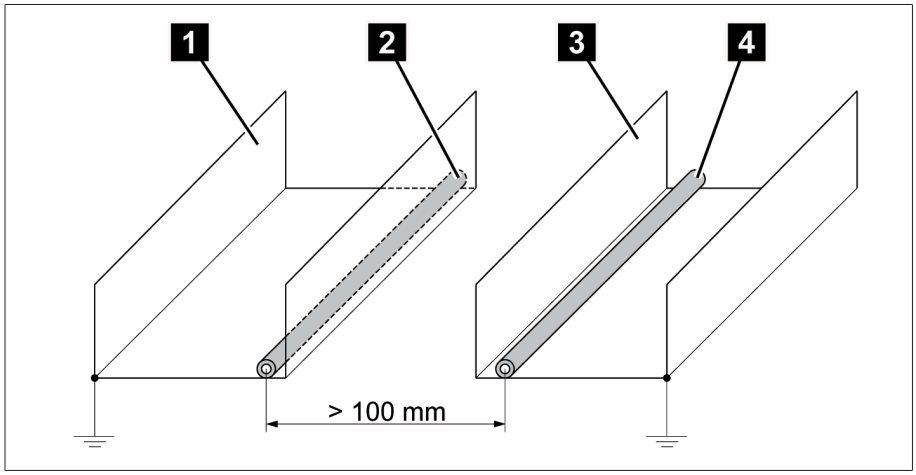

Figure 36: Recommended wiring

1	Cable duct for lines causing interference	3	Cable duct for lines susceptible to interference
2	Line causing interference (for example power line)	4	Line susceptible to interference (e.g. signal line)

- Short-circuit and ground reserve lines.
- Never connect the device with a multi-core bus line.
- For signal transmission, use shielded lines with individual conductors (outgoing conductor / return conductor) twisted in pairs.
- The shield must be connected across the entire surface (360º).

For optional installation of the control unit in a control cabinet, also note the following:

1. If both the control cabinets in which the start and end of the cable are connected are on the same potential: Use shield on both sides.
2. *NOTICE!* If both the control cabinets in which the start and end of the cable are connected are on a different potential: Only use shield on one side. Otherwise circulating currents caused by potential equalization will arise which may cause damage due to grounding loops.

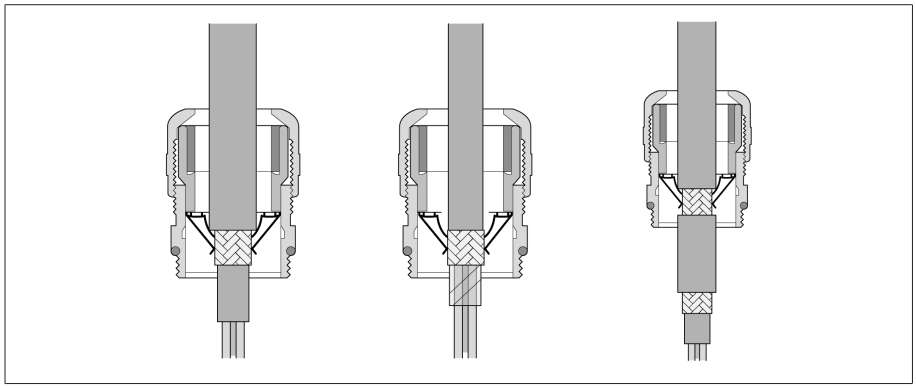

Figure 37: Example: Shield with cable screw connections

7.3.3.3 Requirements for the power supply circuit

Power supply during commissioning tests

⚠ DANGER

Danger of explosion!

An incorrect position of the on-load tap-changer or the motor drive shaft can lead to malfunction and, consequently, to an overload of the on-load tap-changer. This overload can lead to an explosion in the transformer.

- Carry out automatic adjustment and trial tap-change operations on a voltage-free transformer.
- Supply the controller and motor-drive unit via a separate voltage source during these tests.
- If a separate voltage source is not available, it is imperative that the correct position of the on-load tap-changer and motor-drive unit be checked again according to the section "Mounting the motor drive" before these tests.

Ensure the correct position of motor-drive unit: The feather key **1** of the motor shaft must be facing the mark **2**:

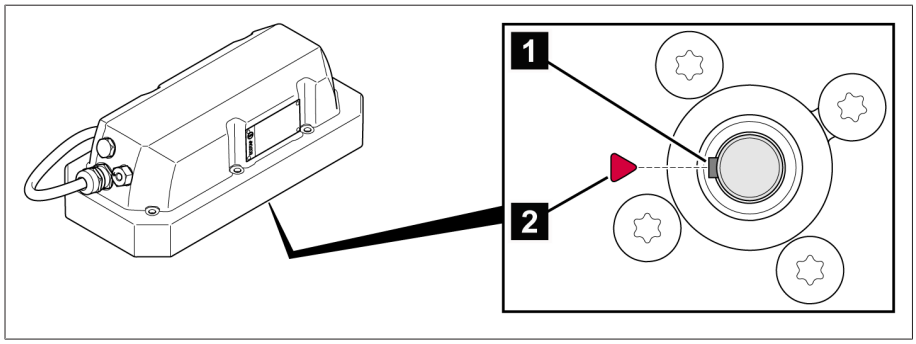

Figure 38: *Check the position of the motor-drive unit*

Ensure the correct position of the on-load tap-changer: The marking on the cam disk **1** must be in the marked area on the cover **2**:

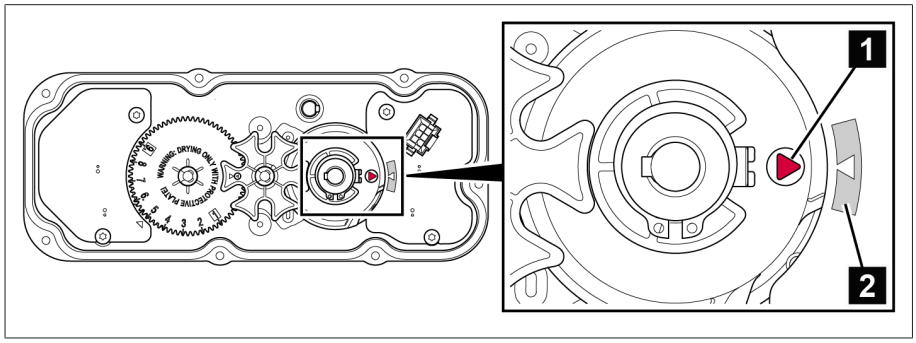

Figure 39: *Checking the position of the on-load tap-changer*

Further details: See section "Mounting the motor-drive unit".

Power supply during operation

After completing the test tap-change operations, you must adjust the power supply for the control unit supplied from a separate power source for the tests.

i The electrical voltage of the motor-drive unit and control unit has to be supplied by the controlled transformer itself during operation, because this signal is also used as the measurement signal.

All-pole isolating device

You may connect the control unit only to circuits with an external overcurrent protection device and an all-pole isolating device, enabling the equipment to be fully de-energized if required (service, maintenance, etc.).

Suitable equipment includes isolating devices in accordance with IEC 60947-1 and IEC 60947-3 (e.g. circuit breakers). Observe the properties of the relevant circuits (voltage, maximum currents) when selecting the circuit breaker type. In addition, observe the following:

- It must be easy for the operator to access the isolating device
- The isolating device must be labeled for the device and the circuits to be isolated
- The isolating device may not be a part of the power line
- The isolating device may not interrupt the main protective conductor

You must connect the power supply circuit with a conductor cross-section of at least 1.5 mm^2 (AWG 16) and protect it with a C10A or B10A type miniature circuit breaker.

Supply via voltage transformers

⚠ DANGER

Electric shock!

If you supply power to the device via a voltage transformer, the output voltage of the voltage transformer has no bearing on the protective conductor. As a result, protection of the device against electric shock in the event of an error is not guaranteed.

› Take appropriate measures to protect against electric shock according to IEC 61140 and the local connection regulations.

Further conditions:

- Assurance that there are no voltage drops in the converter under load to ensure regular operation.
- For the correct dimensioning of the voltage transformer, observe the information in the section "Technical data of the control unit" [▶Section 15.6, Page 138].
- The measurement accuracy is influenced by the measuring error of the voltage transformer.
- During the energy accumulator charging process, the measuring error of the voltage transformer can increase significantly. The charging process for the energy accumulator takes approx. 35 s during initial charging and approx. 0.3 s after each on-load tap-change operation.
- The transmission ratio of the voltage transformer must be taken into consideration when setting the desired value.

The transmission ratio influences the voltage measurement value shown in the display. Conversion within the controller is not possible.

7.3.3.4 Connecting control unit in standard design

For the correct connection, observe the connection diagram supplied.

1. Connect the 5-wire connection cable of the motor-drive unit to terminal X4 (0.4 Nm).
2. Connect the 2-wire connection cable of the motor-drive unit to terminal X2 (0.5 Nm).

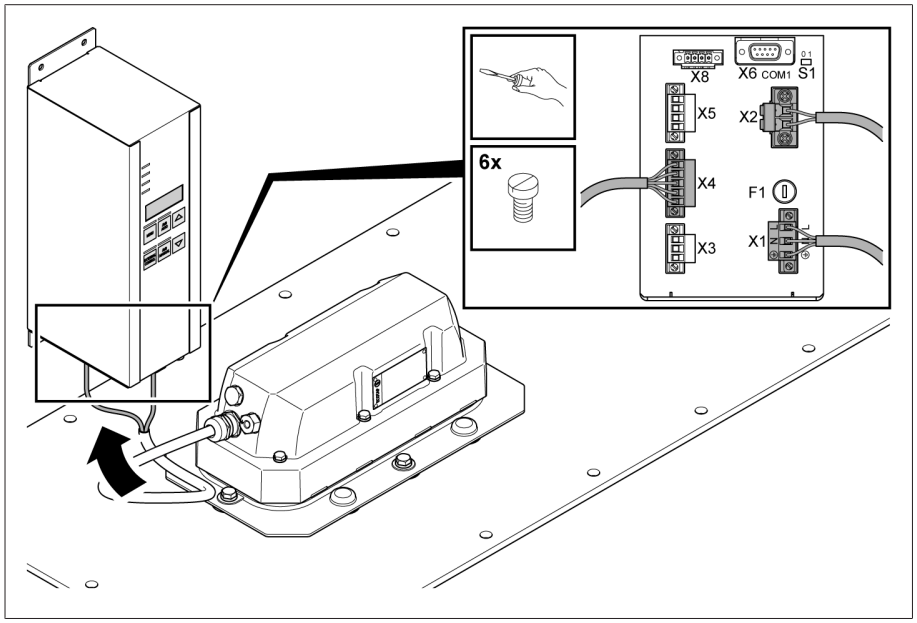

Figure 40: Connection cable connection

3. Secure the connection cable of the motor-drive unit with a strain relief in the area before the cable harness is split.
4. Screw the signal for blocking (e.g. door interlock or temperature blocking) onto the supplied plug connector for X3 with a torque of 0.4 Nm. Tighten the plug connector onto terminal X3 with a torque of 0.4 Nm.
5. Screw down wiring for Customer messages interface *STATUS OK/ERROR* (terminal X5) to the supplied plug connector for X5 with 0.4 Nm. Tighten the plug connector onto terminal X5 with a torque of 0.4 Nm.
6. ⚠ DANGER! Ensure that the connections PE, N and L are not interchanged. Otherwise, dangerously high voltages could occur at the housing. Tighten the control unit power supply to the plug connector for X1 with 0.5 Nm in accordance with the supplied connection diagram. In addition, use the green cable housing supplied for touch protection.
7. The plug connector is coded. Carry out the installation without using force by connecting the plug connector to terminal X1 correctly according to the device labeling and screwing it tight with 0.5 Nm.
8. Tighten the SUB-D connector (Modbus communication) at X6 with a torque of 0.1 Nm.

7.3.4 Switching on power supply

⚠ DANGER

Danger of explosion!

An incorrect position of the on-load tap-changer or the motor drive shaft can lead to malfunction and, consequently, to an overload of the on-load tap-changer. This overload can lead to an explosion in the transformer.

- Carry out automatic adjustment and trial tap-change operations on a voltage-free transformer.
- Supply the controller and motor-drive unit via a separate voltage source during these tests.
- If a separate voltage source is not available, it is imperative that the correct position of the on-load tap-changer and motor-drive unit be checked again according to the section "Mounting the motor drive" before these tests.

Ensure that the transformer is idle.

> To protect the loads from impermissible fluctuations in voltage, only activate the load circuits (low-voltage busbar) after all tests are finished.

To activate the motor-drive unit and control unit, proceed as follows:

NOTICE! Serious delay in commissioning due to wiring errors! Ensure the correct connection in accordance with section "Connecting control unit at operating site".

- Activate the power supply for the control unit.
  - » The control unit starts automatically after a few seconds. The ⏻ LED flashes for 10 s to indicate the inrush interlock. After 10 s, this LED lights up blue continuously.
  - » The 🔋 LED also starts by flashing and then lights up continuously as soon as the internal energy accumulator is fully charged.
  - » If the ⚠ LED is not lit up, then the control unit is ready.

You will see the following values in the rolling display:

Description	Display (brief description, example value)
Current measured voltage	U_235.6
Event message (if present)	E2.6
Current tap position	000016
Switch position	POS__5

Table 10: Rolling display, standard

With the optional DS function, you can use parameter F10.3 to extend the rolling display with the measured values of the DS function, see section "Extending rolling standard display (F10.3)" [▶Section 8.4.22.3, Page 99].

Example of an extended rolling display with the measured values of the DS function (P 3-phase):

Description	Display (brief description, example value)
Current measured voltage	U_235.6
Event message (if present)	E2.6
Current tap position	000016
Switch position	POS__5
Desired value for voltage regulation	1 Ur
Value U_{ref} [V], 1-phase L/N	230.0
Current measured power	3 P
Value P, 3-phase [kW]	400.0
Current measured current	1 I
Value I, 1-phase [A]	579.7
Parameter P11.1 status	P11.1
ON = 1 or OFF = 0	1

Table 11: Extended rolling display (DS function)

If the red ⚠ LED is lit up and the *E4* event code appears in the display, the motor-drive unit and control unit have not yet been adjusted to one another.

› Before commissioning, an automatic adjustment of the on-load tap-changer and the motor-drive unit must be made. Observe section "Automatic adjustment [▶Section 8.4.13.1, Page 90]" for this.

7.3.5 Performing trial tap-change operations

Before you activate the transformer, you must carry out trial tap-change operations to check the mechanical and electrical functions of the on-load tap-changer and the motor-drive unit.

✓ You have already carried out automatic adjustment [▶Section 8.4.13.1, Page 90] of the on-load tap-changer and the motor-drive unit.

1. Press AVR MANUAL to activate the AVR MANUAL operating mode.
   » The status LED above the key lights up.

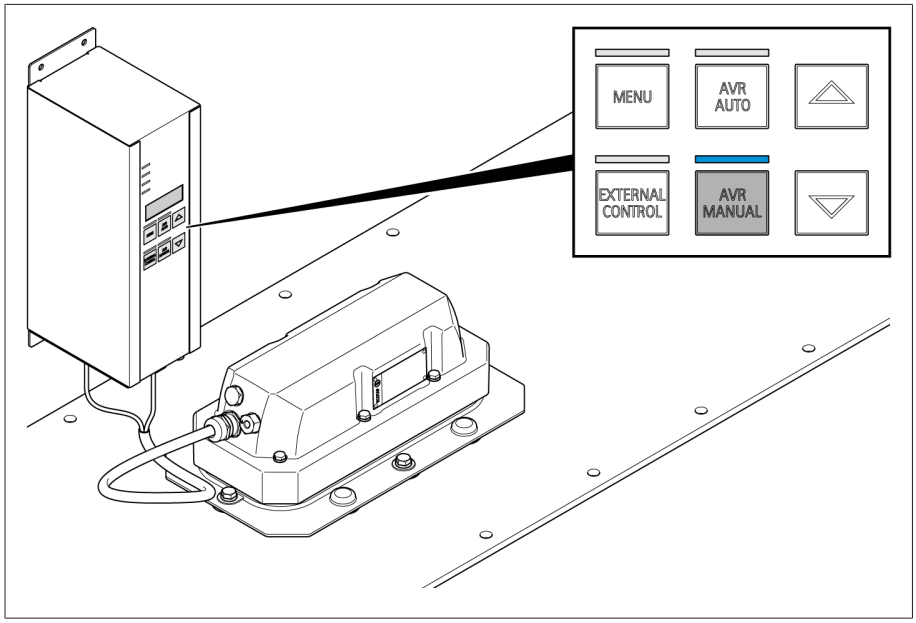

Figure 41: Activating manual mode

2. Use the RAISE/LOWER arrow keys to undertake trial tap-change operations across the entire range of settings.
3. Check that the control unit records and correctly displays every position. Otherwise, carry out automatic adjustment again.

> The control ensures that the required cooling time of approx. 3 seconds is maintained after each on-load tap-change operation. During this time, the control will not accept any tap-change commands.

7.3.6 Switching on medium voltage

After completing the trial tap-change operations, you must adjust the voltage supply for the control unit supplied through a separate power source. The voltage supply has to be supplied by the controlled transformer itself during operation, because this signal is also used as the measurement signal.

1. ⚠ DANGER! Ensure that all cables in the working area are de-energized and that the shutdown equipment is locked so that it cannot be switched on again. Otherwise, there is a risk of fatal injury due to electrical voltage during the subsequent work.
2. Screw on the plug connector for terminal X1 on the control unit.
3. Disconnect wiring to the separate power source from this plug connector.
4. Adjust the voltage supply from the transformer to the specification and the information in the technical data [▶Section 15, Page 131].

5. ⚠ DANGER! Ensure that the connections PE, N, and L are not interchanged. Otherwise, dangerously high voltages could occur at the housing. Tighten (0.5 Nm) the wiring for the transformer power supply to the plug connector for X1 in accordance with the supplied connection diagram.
6. The plug connector is coded. Carry out the installation without using force. Connect the plug connector to terminal X1 correctly according to the device labeling and screw it tight with 0.5 Nm.

> To protect the loads from impermissible fluctuations in voltage, only activate the load circuits (low-voltage busbar) after all tests are finished.

To activate the motor-drive unit and control unit, proceed as follows:

› Switch on medium voltage (transformer is idle).

» The control unit starts automatically after a few seconds. The ⏻ LED flashes for 10 s to indicate the inrush interlock. After 10 s, this LED lights up blue continuously.

» The 🔋 LED also starts by flashing and then lights up continuously as soon as the internal energy accumulator is fully charged.

» If the ⚠ LED is not lit up, then the control unit is ready.

» If the red ⚠ LED lights up and the *E4* event code is shown in the display, the automatic adjustment was not carried out correctly.

7.3.7 Setting parameters

Set the most important parameters for commissioning the device in accordance with your requirements.

To do this, follow the description provided in the section Configuring the control unit [▶Section 8.4, Page 66].

7.3.8 Checking automatic voltage regulation

To check the automatic voltage regulation, proceed as follows:

1. Measure voltage on low-voltage side of transformer.
2. Press AVR MANUAL to activate the AVR MANUAL operating mode.
3. Press ⏶ or ⏷ as often as necessary until the measured voltage is beyond the range of the set bandwidth (desired voltage ± bandwidth).
4. Press AVR AUTO to activate AVR AUTO operating mode.
   » After the delay time, the on-load tap-changer moves back into the range of the set bandwidth. If this does not happen, check the voltage regulation parameters [▶Section 8.4.1, Page 66] and repeat the test.
5. Press AVR MANUAL to activate the AVR MANUAL operating mode.

» Automatic voltage regulation has been checked.

7.3.9 When operating with alternative insulating liquids: activating temperature blocking

If approved by the transformer manufacturer, you can operate the on-load tap-changer with alternative insulating fluids listed in the technical data [▶Section 15.2, Page 132]. When doing so, you must ensure that switching operations

cannot be performed during operation if the transformer's insulating fluid temperature is less than the permissible temperature. You can use the control unit blocking contact for this.

To use the control unit blocking contact, observe the following points:
- The temperature sensor in the transformer tank must be adjusted to the permissible temperature range.
- The temperature sensor must make a signal in the form of a floating contact available, and it must be connected to the control unit blocking contact (terminal X3).
- The blocking function parameter (P5) must be set to the value 2 [▶Section 8.4.5, Page 81].

7.3.10 Switching on the low-voltage busbar

NOTICE

Damage to the on-load tap-changer and transformer!

An inrush current impulse which has not fully subsided can damage the on-load tap-changer and transformer in the event of an on-load tap changing operation!

› Once the transformer has been switched on, ensure that the inrush current impulse has fully subsided before undertaking an on-load tap changing operation. The inrush current impulses are usually a multiple of the transformer rated current and can overload the on-load tap-changer during the diverter switch operation.

Once you have connected the control unit and undertaken trial tap-change operations, you can commission the low-voltage busbar as follows:

1. Move the on-load tap-changer to the adjustment position.

> **i** It may be a good idea to move the on-load tap-changer into a position other than the adjustment position. This allows you to reduce the voltage differences between the grids to be connected and thereby minimize the inrush current impulse.

2. On the control unit, set the desired operating mode by pressing the corresponding key:
   - Auto mode: AVR AUTO
   - Manual mode: AVR MANUAL
   - Control via remote connection: EXTERNAL CONTROL.
3. Switch on the low-voltage busbar.
4. Once the transformer has been switched on, ensure that the inrush current impulse has subsided.

» On-load tap-change operations can now be undertaken both when idling and under load conditions.

8 Operation

On-load tap-change operations can be undertaken both manually and automatically. You can see the selected operating mode on the LED display on the control unit.

In the EXTERNAL CONTROL operating mode, the device executes control commands from an external controller (e.g., ECOTAP® VPD® CONTROL PRO). In this case, manual operation using the LOWER and RAISE keys is not possible. In this case, please note the safety instructions and the detailed description in the associated operating instructions for the external controller.

In the AVR AUTO operating mode, the tap-change operations are executed in accordance with the set control parameters.

By pressing the AVR MANUAL key once, you can switch to the manual operating mode and then execute tap-change operations by pressing the UP/DOWN arrow keys.

Standard mode is not designed for tap-change operations without a control unit.

Should you experience problems in operating the control unit or on-load tap-changer, consult the "Fault elimination" section.

8.1 Monitoring on-load tap-changer

Monitoring the on-load tap-changer, the motor-drive unit, and the control unit is limited to occasional visual checks. For efficiency reasons, these visual checks can be combined with the usual checks on the transformer.

Pay particular attention to the following:
- Oil impermeability at transition points between the sealing module and the transformer
- The cable connections between the control unit and the motor-drive unit are in a sound condition
- Other damage

In the event of noticeable discrepancies, contact Maschinenfabrik Reinhausen GmbH's Technical Service department.

NOTICE

Damage to the on-load tap-changer!

Damage to the on-load tap-changer resulting from switching the on-load tap-changer at impermissible oil temperatures!

› The on-load tap-changer can be operated in the temperature range of the surrounding transformer oil of between –25 °C and +105 °C and in accordance with IEC 60214-1 up to +115 °C (during emergency transformer operation in accordance with IEC 60076-7).

› If using alternative insulating liquids, only a limited temperature range is permitted during operation. Ensure compliance with the specified temperature limit values and observe the following information.

The temperature limit values to be taken into account depending on the insulating fluid used can be found in the "Technical data" section.

Ensure that the temperature limit values are not exceeded and that the "Temperature blocking" function works correctly.

8.2 Selecting the operating mode

You can select the operating mode via the operating controls on the front panel of the control unit.

AVR MANUAL manual mode

In manual mode, you can perform tap-change operations via the ⏶ (= increase voltage) and ⏷ (= reduce voltage) keys.

NOTICE

Damage to property through uncontrolled on-load tap-change operations.

As a result of uncontrolled manual tap-change operations, the line voltage of the consumers may exceed the permitted limit values. This may result in damage to the devices and subsequent damage.

› Only undertake manual tap-change operations if no consumers are connected or if you can ensure that the line voltage on the consumer side does not leave the permitted operating range.

To perform manual tap-change operations, proceed as follows:

1. Press AVR MANUAL to activate manual mode.
2. Press ⏶ or ⏷ to execute a tap-change operation.

AVR AUTO auto mode

In auto mode, the device executes the tap-change operations automatically, depending on the set control parameters. Observe section "Configuring the control unit" [▶Section 8.4, Page 66] for further information on the control parameters. To activate auto mode, proceed as follows:

› Press AVR AUTO to activate auto mode.

Control via EXTERNAL CONTROL

In the EXTERNAL CONTROL operating mode, the device executes the control commands of an external control unit (e.g. ECOTAP® VPD® CONTROL PRO). Refer to the operating instructions supplied with the control unit for more information.

To activate control via EXTERNAL CONTROL, proceed as follows:

› Press EXTERNAL CONTROL to activate control via EXTERNAL CONTROL.
» The device will perform the OLTC-PreCheck. In this mode, the OLTC-PreCheck is automatically repeated every 24 hours.

8.3 Actuating the on-load tap-changer in emergency operation

⚠ WARNING

Danger of death or serious injury!

Improper actuation of the on-load tap-changer may result in death or serious injury!

- Fully de-energize the transformer and lock to prevent it from being switched back on.
- Only actuate the on-load tap-changer manually to set the adjustment position or for emergency operation. Emergency operation is to be understood as the failure of the motor-drive unit's voltage supply when there is an urgent need to perform an on-load tap-change operation.

1. ⚠ DANGER! Risk of fatal injury due to electrical voltage. Ensure that all cables in the working area are de-energized and that the shutdown equipment is locked so that it cannot be switched on again.
2. Remove the plug connectors from the terminals X1, X2 and X4 on the control unit.

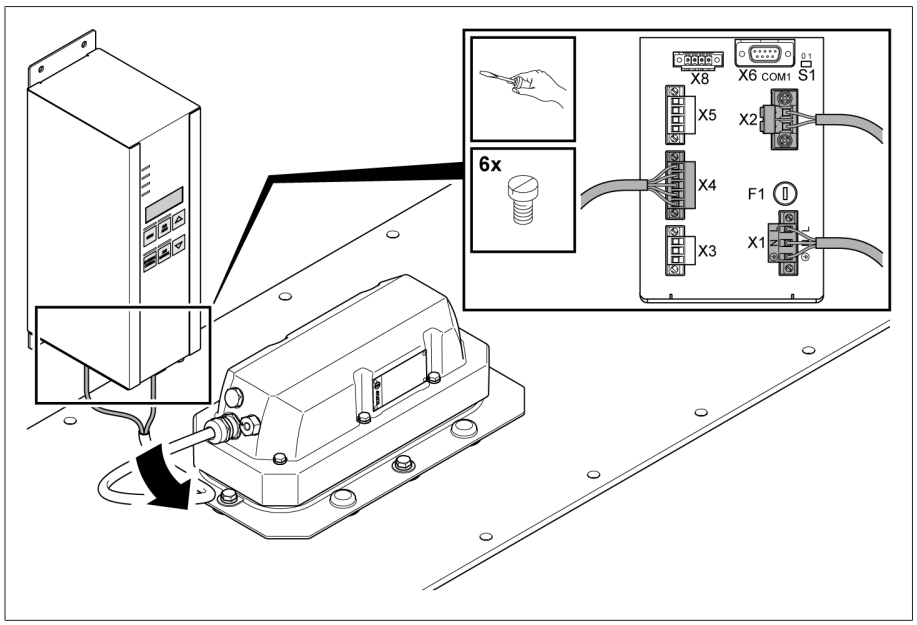

Figure 42: Removing the connection cable

3. Loosen screws and lift motor-drive unit off sealing module.

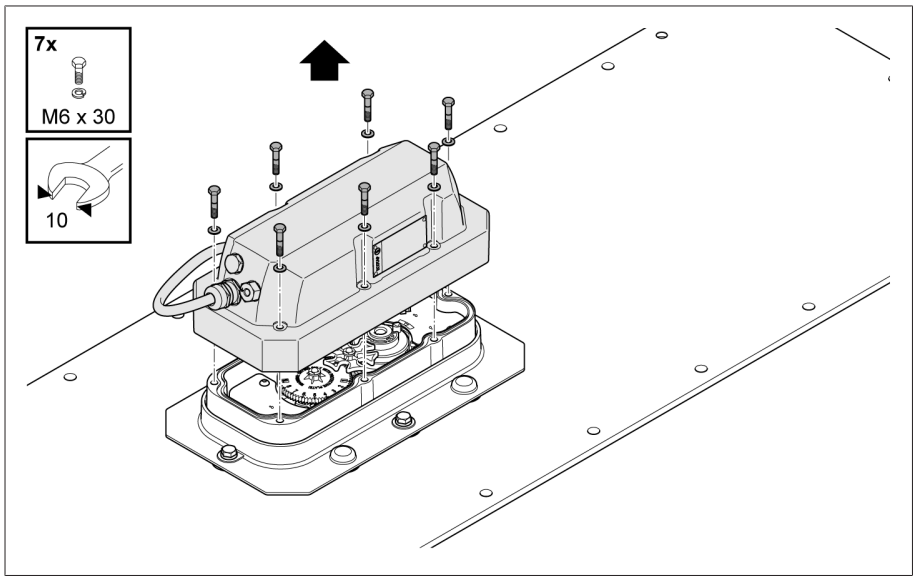

Figure 43: Removing the motor-drive unit

4. Turn the shaft of the on-load tap-changer in the direction of the desired operating position using an Allen key, wrench size 10.

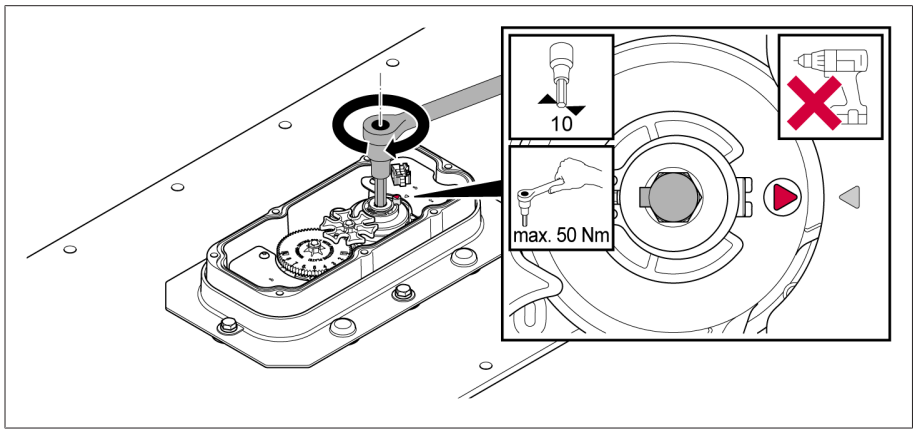

Figure 44: Emergency drive shaft operation

5. *NOTICE!* Using an Allen key, turn for every tap-change operation in one direction until one revolution has been completed and the arrow on the cam disk (1) is again pointing to the arrow in the cover (2). Otherwise, the tap-change operation has not been completed correctly, which may result in damage to the on-load tap-changer and transformer.

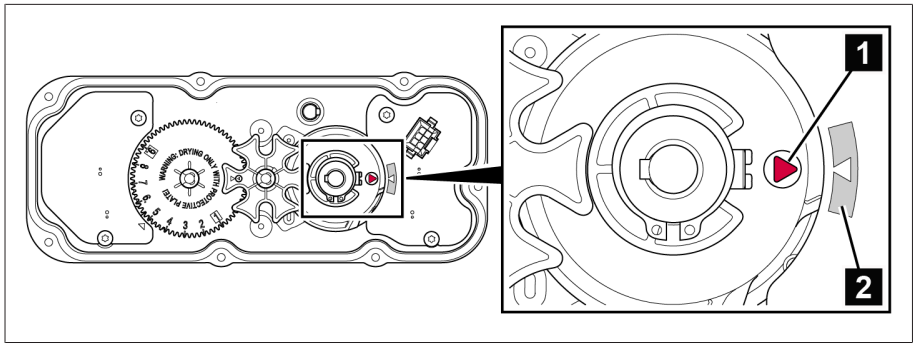

Figure 45: Position of the shaft of the on-load tap-changer

» The operating position reached is displayed by the control wheel.

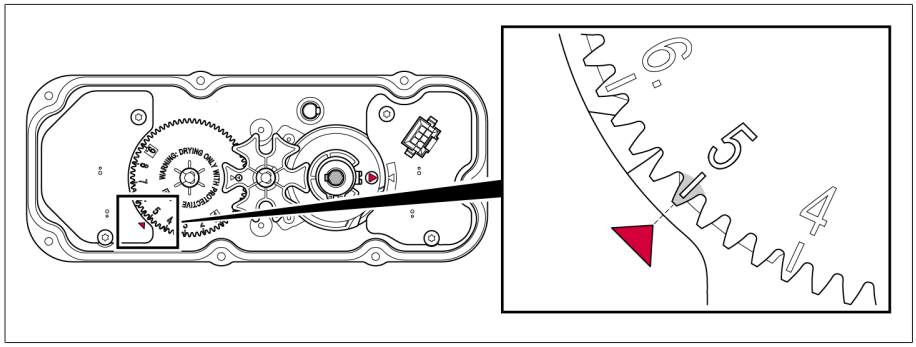

Figure 46: Checking the operating position

6. Mounting the motor-drive unit.
7. Connect the connectors to the terminals X4, X2 and X1 on the control unit.

8.4 Configuring the control unit

This chapter describes how to configure the control unit. You will find the setting ranges for the parameters in the section "Parameter overview" [▶Section 13, Page 127].

> Settings are only saved once the parameterization menu is exited via the MENU key. If you do not press the MENU key within 3 minutes, the parameterization menu is exited automatically and the changes are not saved.

8.4.1 Regulation

All of the parameters required for the regulation function are described in this section.

Two adjustable bandwidths with associated delay times are available for adjusting the regulation.

First, specify the parameters for bandwidth B1 and delay time T1.

Then, specify parameters B2 and T2 for rapid regulation in the event of larger deviations: B2 > B1 and T2 < T1.

The regulation function works in accordance with the same principle in both cases, and therefore is not displayed twice in the graphic for better clarity.

In AVR AUTO auto mode, voltage regulation works as follows:

- If the measured voltage U_{actual} **5** is within the set bandwidth **6** (= entire gray area), no control commands are issued to the motor-drive unit for the tap-change operation.
- Control commands will also not be issued to the motor-drive unit if the measured voltage leaves the set bandwidth **A** and returns to the tolerance bandwidth **B** within the set delay time T **4**.
- However, if the measured voltage deviates from the set bandwidth for a longer period **C**, a tap-change command **D** occurs after expiration of the set delay time. The on-load tap-changer carries out a tap-change in a raise or lower direction to return to the tolerance bandwidth.

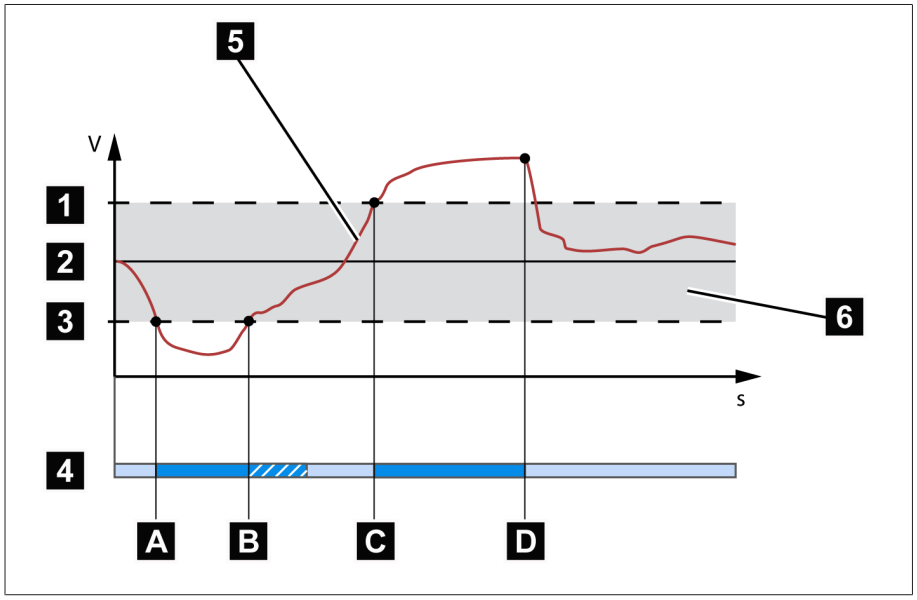

Figure 47: Regulation function response

1	+B %: Upper limit	2	$U_{desired}$: Desired value
3	-B %: Lower limit	4	Set delay time T
5	U_{actual}: Measured voltage	6	Bandwidth = gray area between upper limit +B % and lower limit -B %.
A	U_{actual} is outside the bandwidth. Delay time T starts.	B	U_{actual} is back within the bandwidth before delay time T is complete.
C	U_{actual} is outside the bandwidth. Delay time T starts.	D	U_{actual} is still outside the bandwidth when delay time T is complete. Tap-change operation is initiated.

8.4.1.1 Desired voltage (P1)

You can use this parameter to set the desired value for voltage regulation. To do so, proceed as follows:

✓ The AVR MANUAL operating mode is active.

1. Press MENU > ▲ until the desired parameter is displayed.
   » P1
2. Press AVR MANUAL to confirm the selection.
3. Press ▲ or ▼ to select the desired value.
4. Press AVR MANUAL to confirm the selection.
5. Press MENU to save the setting.

8.4.1.2 Bandwidth B1 (P2.1)

You can use this parameter to set the maximum permissible deviation in measured voltage U_{actual} from the desired value $U_{desired}$. The following section describes how you determine and set the bandwidth.

Determining bandwidth

> In order to set a correct value, the nominal voltage of the transformer and the voltages in the tap positions must be known. Note that a large bandwidth will result in a large control deviation.

The bandwidth must always be greater than the following value:

$$\pm B\% \geq 0{,}6 \cdot \frac{|U_{n-1} - U_n|}{U_{nom}} \cdot 100\%$$

Figure 48: Calculation of minimum bandwidth

U_{n-1}	Voltage of tap position n-1
U_n	Voltage of tap position n
U_{nom}	Nominal voltage

The following transformer values are used to determine the minimum bandwidth:
Nominal voltage U_{nom} *= 400 V*
Voltage in tap position 4 $U_{Pos.4}$ *= 390 V*
Voltage in tap position 5 $U_{Pos.5}$ *= 400 V*

$$\pm B\% \geq 0{,}6 \cdot \frac{|U_{Pos.4} - U_{Pos.5}|}{U_{nom}} \cdot 100\%$$

$$\pm B\% \geq 0{,}6 \cdot \frac{|390\ \text{V} - 400\ \text{V}|}{400\ \text{V}} \cdot 100\%$$

$$\pm B\% \geq 1{,}5\%$$

Example:

- For the smallest bandwidth ±B %, which is reasonable for a control according to the specified step voltage, the value ≥**1.5 %** was determined above.
- The value **2 %** is now selected for the parameter "bandwidth B1". This value corresponds to the maximum desired positive deviation (+B %) or negative deviation (-B %) of the measuring voltage from the desired value.
- The distance between the upper limit value "$U_{desired}$ + 2 %" and the lower limit value "$U_{desired}$ - 2 %" results in a **total bandwidth of 4 %**.

Setting bandwidth B1 (P2.1)

To set the bandwidth, proceed as follows:

✓ The AVR MANUAL operating mode is active.

1. Press MENU > ⏶ until the desired parameter is displayed.
   » P2
2. Press AVR MANUAL to confirm the selection.
   » P2.1
3. Press AVR MANUAL to confirm the selection.
4. Press ⏶ or ⏷ to set the desired value.
5. Press AVR MANUAL to confirm the selection.
6. Press MENU to save the setting.

8.4.1.3 Delay time T1 (P2.2)

The Delay time T1 delays the issuing of a tap-change command for a defined period. This prevents unnecessary tap-change operations if the tolerance bandwidth is exited only briefly.

To set the delay time T1, proceed as follows:

✓ The AVR MANUAL operating mode is active.

1. Press MENU > △ until the desired parameter is displayed.

   »

2. Press AVR MANUAL to confirm the selection.
3. Press △ until the desired parameter is displayed.

   »

4. Press AVR MANUAL to confirm the selection.
5. Press △ or ▽ to set the desired value. Alternative: Press AVR AUTO + △ or AVR AUTO + ▽ to set the value in larger steps.
6. Press AVR MANUAL to confirm the selection.
7. Press MENU to save the setting.

8.4.1.4 Bandwidth B2 (P3.1)

You can use this parameter to set the maximum permissible deviation of measured voltage U_{actual} from the desired value $U_{desired}$ for fast regulation. Ensure that the value is always at least 0.5% greater than the bandwidth B1. If you set a lower value, the device corrects the setting automatically. If you select the "off" option, fast regulation is deactivated.

To set the B2 bandwidth, proceed as follows:

✓ The AVR MANUAL operating mode is active.

1. Press MENU > △ until the desired parameter is displayed.

   »

2. Press AVR MANUAL to confirm the selection.

   »

3. Press AVR MANUAL to confirm the selection.
4. Press △ or ▽ to select the desired value.
5. Press AVR MANUAL to confirm the selection.
6. Press MENU to save the setting.

8.4.1.5 Delay time T2 (P3.2)

The delay time T2 delays the issuing of a tap-change command for a defined period. This prevents unnecessary tap-change operations if the tolerance bandwidth is exited only briefly. Delay time T2 enables a faster response to larger changes in voltage compared with T1. Note that the setting range is dependent on the delay time T1:

- For T1 ≤ 10 s: T2 = 2 s...(T1 - 1 s)
- For T1 > 10 s: T2 = 2 s...(T1 - 5 s)

To set the delay time T2, proceed as follows:

✓ The AVR MANUAL operating mode is active.

1. Press MENU > △ until the desired parameter is displayed.

   »

2. Press AVR MANUAL to confirm the selection.

3. Press ⏶ until the desired parameter is displayed.
   »
4. Press AVR MANUAL to confirm the selection.
5. Press ⏶ or ⏷ to set the desired value. Alternative: Press AVR AUTO + ⏶ or AVR AUTO + ⏷ to set the value in larger steps.
6. Press AVR MANUAL to confirm the selection.
7. Press MENU to save the setting.

8.4.2 Active power-dependent adjustment of the desired voltage value (DS option)

With the Dynamic Setpoint (DS function) function, you can extend the AVR AUTO function and adjust the desired voltage value based on the measured active power. This allows you, for example, to compensate for a voltage drop during increased load or a voltage increase due to a decentralized feed-in.

Depending on the measured positive or negative active power, the desired value calculation is based on 2 linear equations.

Example with U_{min}, U_{max} as absolute values and P_0, P_{min}, P_{max} as relative values:

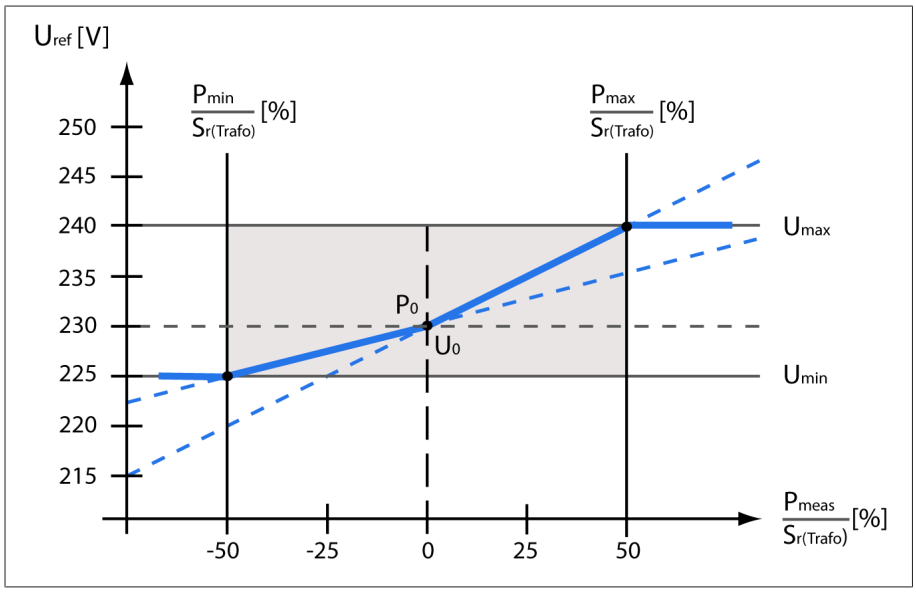

Figure 49: Example of active-power-based adjustment of the desired voltage value

U_{ref}	Desired value	P_{meas}	Measured active power
U_0 = 230 V	Desired value for P_0	P_0 = 0%	Active power at U_0
U_{min} = 225 V	Minimum desired value	P_{min} = -50%	Active power at minimum desired value
U_{max} = 240 V	Maximum desired value	P_{max} = 50%	Active power at maximum desired value
		$S_{r(Tr)}$	Rated power of transformer

Measured active power	DS function behavior	Desired value U_{ref}
$P_{meas} < P_{min}$	If the value falls below P_{min}, U_{min} is set as the desired value.	U_{min}
$P_{min} \leq P_{meas} < P_0$	If the active power is between P_{min} and P_0, the following linear dependency applies:	$U_{ref} = \frac{U_0 - U_{min}}{0 - P_{min}} \times P_{meas} + U_0$
$P_{meas} = P_0$	The desired value at active power P_0 is U_0.	U_0

Measured active power	DS function behavior	Desired value U_{ref}
$P_0 < P_{meas} \leq P_{max}$	If the active power is between P_0 and P_{max}, the following linear dependency applies:	$U_{ref} = \frac{U_{max} - U_0}{P_{max}} \times P_{meas} + U_0$
$P_{meas} > P_{max}$	If the value exceeds P_{max}, U_{max} is set as the desired value.	U_{max}

Table 12: Desired voltage value curve progression

Setting the parameters

The parameters can be configured as absolute values or relative values.

The following applies for the relative values:

- P_0, P_{min}, P_{max}: The parameters for the active power (in kW) relate to the value of the rated power of the transformer (in kVA).
- U_{min}, U_{max}: The parameters for the voltage limits relate to the set voltage U_{ref}.

You will find an overview of all parameters with the factory settings and setting ranges in the section Overview of parameters [▶Section 13, Page 127].

Activating the DS function

If the DS function is deactivated, voltage regulation is based on the set P1 desired value. The DS function is active when parameter 11.1 is set to "1". Make sure that the parameters P11.2 to P11.14 are set correctly for the application.

You can activate the function in two ways:

- Parameter
- Control system command

To activate/deactivate the DS function using parameters, proceed as follows:

✓ The AVR MANUAL operating mode is active.

1. Press MENU > △ until the desired parameter group is displayed.
   » P11
2. Press AVR MANUAL to confirm the selection.
3. Press △ until the desired parameter is displayed.
   » P11.1
4. Press AVR MANUAL to confirm the selection.
5. Press △ or ▽ to set the desired value.
6. Press AVR MANUAL to confirm the selection.
7. Press MENU to save the setting.

All parameters with setting range [0;1] are set in accordance with the same scheme:

Parameter	Designation
P11.1	DS function on/off
P11.4	Selection of value representation U_{min} (minimum desired value) as absolute value or relative value
P11.6	Selection of value representation U_{max} (maximum desired value) as absolute value or relative value

Parameter	Designation
P11.8	Selection of value representation P_0 (active power) as absolute value or relative value
P11.10	Selection of value representation P_{min} as absolute value or relative value
P11.12	Selection of value representation P_{max} as absolute value or relative value

Table 13: Parameter with setting range [0;1]

The remaining parameters with a larger setting range are set digit by digit, from right to left.

Example: Setting the maximum desired value U_{max} to 255.5 V

Digit 6	Digit 5	Digit 4	Digit 3	Digit 2	Digit 1
-	-	2	5	5	5

✓ The AVR MANUAL operating mode is active.

1. Press MENU > ⏶ until the desired parameter group is displayed.
   »
2. Press AVR MANUAL to confirm the selection.
3. Press ⏶ until the desired parameter is displayed.
   »
4. Press AVR MANUAL to confirm the selection.
   » The last set value (default value) will be displayed.
   » The point to the right of **digit 1** flashes, signalizing readiness for setting:

5. Press ⏶ x5 to set the desired value for **digit 1**.
6. Press AVR MANUAL to confirm the selection.
   » The point to the right of **digit 2** flashes, signalizing readiness for setting:

7. Press ⏶ x5 to set the desired value for **digit 2**.
8. Press AVR MANUAL to confirm the selection.
   » The point to the right of **digit 3** flashes, signalizing readiness for setting:

   » Press ⏶ x1 to set the desired value for **digit 3**.
9. Press AVR MANUAL to confirm the selection.
   » The point to the right of **digit 4** flashes, signalizing readiness for setting:

10. Press AVR MANUAL to confirm the selection, because a change is not necessary here.
    » The point to the right of **digit 5** flashes, signalizing readiness for setting:

11. Press AVR MANUAL again, because **digit 5** is not relevant for this parameter.
    » is displayed.
12. Press ⏶ until the next parameter to be set is displayed.

The following parameters are set in accordance with the same principle:

Parameter	Designation
P11.2	Transformer nominal power $S_{r(Tr)}$
P11.3	Desired value U_0 at active power P_0
P11.5	Minimum desired value U_{min}
P11.7	Maximum desired value U_{max}
P11.9	Active power P_0 at desired value U_0
P11.11	Active power P_{min} at minimum desired value U_{min}
P11.13	Active power P_{max} at maximum desired value U_{max}
P11.14	Current transformer transmission ratio

Table 14: Parameter with larger setting range

The regular measurement range of current transformer input X7 is in the range of 0–5 A. The adjustment to the external current transformer is made via the parameter P11.14.

Example:
with an external current transformer 100 A/5 A, P11.14 has to be set to 20.

Parameter overview for the DS function

Parameter	Designation	Decimal place	Unit	Factory settings	Setting range
P11.1	DS function on/off	-	-	1 = on	0 = off 1 = on
P11.2	Transformer nominal power $S_{r(Tr)}$	0	kVA	400	1...32760
P11.3	Desired value U_0 (absolute) for active power P_0	1	V	230	85.0...264.0
P11.4	Value representation selection U_{min} (P11.5)	-	-	0 = absolute	0 = absolute 1 = relative
P11.5	Minimum desired value U_{min}	1	V	220	85.0...264.0
P11.6	Value representation selection U_{max} (P11.7)	-	-	0 = absolute	0 = absolute 1 = relative
P11.7	Maximum desired value U_{max}	1	V	240	85.0...264.0
P11.8	Value representation selection P_0 (P11.9)	-	-	1 = relative	0 = absolute 1 = relative
P11.9	Active power P_0 at desired value U_0	1	%	0	-200.0...200.0
P11.10	Value representation selection P_{min} (P11.11)	-	-	1 = relative	0 = absolute 1 = relative
P11.11	Active power P_{min} at minimum desired value U_{min}	1	%	-50	-200.0...200.0
P11.12	Value representation selection P_{max} (P11.13)	-	-	1 = relative	0 = absolute 1 = relative
P11.13	Active power P_{max} at maximum desired value U_{max}	1	%	50	-200.0...200.0
P11.14	Current transformer transmission ratio	1	-	100	1.0...6500.0

Table 15: Parameter overview Function DS

Please note the following:
- When switching from absolute to relative (and vice versa), the unit changes and rounding deviations occur for the associated value.
- The Modbus data point is adjusted as soon as you save the new setting by exiting the menu.
- A decimal place only applies to the display value and not to the data point value.

Example with factory settings U_0 = 230 V und U_{min} = 220 V:

Value representation absolute:

Parameter	Display value	Data point value (Modbus RTU)	Note
P11.4	0	0	Value representation absolute
P11.5	220.0	2200	Real value = data point value/10

Changeover to value representation relative:

Parameter	Display value	Data point value (Modbus RTU)	Note
P11.4	1	1	Value representation relative
P11.5	-4.4	65492	-

Conversion of the data point value (Modbus RTU) with auxiliary variable x:
- 65535 (two's complement) ≙ -1 (decimal number)
- 65492 (two's complement) ≙ x (decimal number)
- 65535 - 65492 = -1 - x
- x = -44

The corresponding display value results from the data point value (Modbus RTU) and the conversion factor 10:
- -44/10 = -4.4
- With U_0 = 230 V this results in: $U_{min} = U_0 - 4.4\% = 230\ V - 4.4\% = 220\ V$.

8.4.3 Measured value memory (DS option)

For the time stamp, a quartz clock with battery buffering is integrated to bridge a power failure. Automatic changeover to daylight saving time, winter time or another time zone is not possible. Therefore, it is important to set the desired time via the holding registers 116...122 (see Holding register (with option DS) [▶Section 9.4.6, Page 113]). An adjustment of the time setting always only affects the future and cannot retroactively change the already-stored data.

Check the correct setting of the time during commissioning and inspection.

Function description

The measured value memory function belongs to the DS option.

Check the currently transmitted measured values for plausibility during commissioning and inspection. These are displayed in the input register (e.g. address 20, 21: "Momentary current"). An overview can be found in the section „Input Register (with option DS)“ [▶Section 9.4.4, Page 108].

Prerequisites for a meaningful recording of measured values:
- Correct connection and configuration of the measurement inputs for current and voltage.
- Continuous power supply to the control unit.
- Continuous current signal for recording the values P, Q and φ.

The following measured values of one phase are stored:
- Current
- Voltage
- Active power
- Reactive power
- Phase angle φ

The measured value memory is a ring memory and can store the data for approximately one year. When the memory capacity is reached, the oldest data records are overwritten.

Procedure for storing measured values

Recording starts after commissioning the control unit at the beginning of the next 10-minute interval. Example:

- March 28, 2023, 09:11: Switching on the power supply => The next 10-minute interval for recording starts at 09:20.
- At 09:30 the recording of the following 10-minute interval starts and so on.
- At the same time, the average calculation of the measured values for the first 10-minute interval starts at 09:30. The result is stored a few milliseconds later as a data set with a time stamp (start of the interval) as well as the current tap position of the on-load tap-changer:

Y	Mo	D	H	Mi	TP	Current	Voltage	Angle φ	Power	Reactive power
23	03	28	09	20	5	1.00894165	232.691406	1.70513916	0.70248413	0.02099991

Figure 50: Data record measured value memory

Abbreviation	Meaning
Y	Year (**Y**ear)
Mo	Month (**Mo**nth)
D	Day (**D**ay)
H	Hour (**H**our)
Mi	Minute (**Mi**nute)
TP	Tap position (**T**ap **P**osition)

Table 16: Abbreviations measured value memory

- In the example, meaningful records are stored as of 2023-03-28, 09:20, as long as the above conditions are met.
- As soon as the control unit is supplied with voltage, at least one complete day is filled with data in the measured value memory. If, for example, the control unit is only in operation for 1 h during a commissioning test, the memory space for the data records of a complete day is still occupied (24 x 6 = 124 data records).
- Data fields without data entry are filled with default values:
  - "0" for year, month, day, hour, minute and tap position
  - "65535" for current, voltage, phase angle, active power and reactive power
- If the voltage supply is present but the current signal is missing, the data fields for current, phase angle, power and reactive power are written with the default value "65535".

Reading out the data from the measured value memory

> We recommend reading out the entire memory, as this gives you a better overview. This applies in particular if periods with a missing power supply lead to recording gaps.
> The following description for the transfer of a single data block serves to explain the principle procedure.

You can read out the stored measured values via Modbus RTU. A block contains the measured values of one hour and consists of six data sets with the respective 10-minute average values. The time stamp (start of the interval) and the tap position of the on-load tap-changer at the time of data storage are saved for the average values.

For exporting the data records, use a standard Modbus tool with the following functions:

- Continuous read commands and single query
- Log function to read out the entire memory including transfer into an Excel file

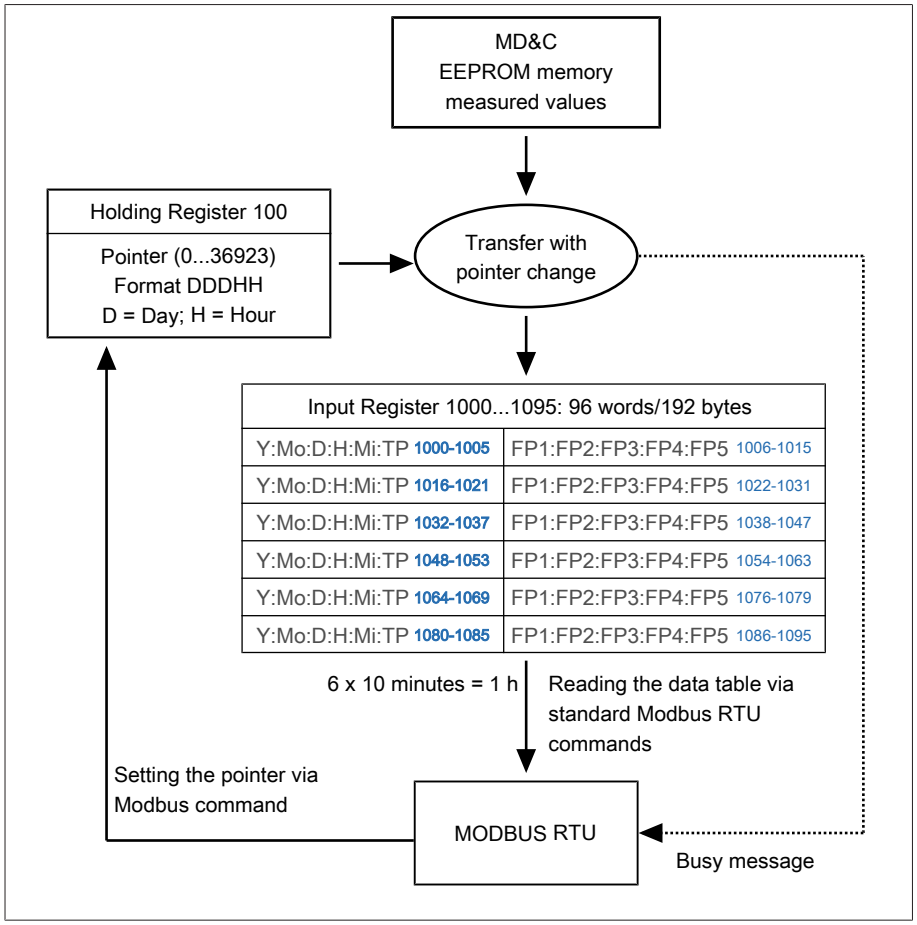

Figure 51: Readout of measured value memory

Abbreviation	10-minute average in floating point (FP) format:
FP1	Current
FP2	Voltage
FP3	Phase angle φ
FP4	Active power
FP5	Reactive power

Table 17: Measured values in the input register

› Start the read operation by setting the pointer (Holding Register 100) to the desired start time.

Examples for the start time:

- Pointer 00010 points to hour 10 on today's date. The data records from 10:00 to 10:50 am can be read in one data packet.
- The pointer 10017 points 100 days back to the data records from 5:00 to 5:50 pm. 100 days back means 100 written day blocks. During standstill of the system, there may be gaps in the records.
- Recommendation: Set the pointer to "00000" to read out the entire memory.

Sequence description:

- When the read command is transmitted, the first 6 data records (1 h) are written from the measured value memory into the input registers 1000...1095 and then transmitted.
- After completion of the transmission of the first 6 data sets (suitable Modbus tool provided), the pointer is automatically incremented to start the transmission of the next 6 data sets (1 h).
- In this way, the complete memory can be read out.

Notes:

- As soon as the storage capacity is exhausted, the oldest day block is pushed out of the ring buffer by each new day block.
- The "Busy" message appears if the next read command occurs too early. A waiting time of at least 10 ms is required between two queries.
- With a Modbus tool with continuous read mode, a new data record is written to the input registers 1000...1095 with each new read command, as the pointer (holding register 100) is automatically incremented. This function is hard coded and facilitates the reading of the data.
- In the input register 1000...1095, only 1 h with 6 data sets can be displayed at a time.

8.4.4 Voltage blocking (P4)

You can use voltage blocking to define limit values for blocking the automatic voltage regulation (AVR AUTO). This allows you to avoid unnecessary tap-change operations in the event of strong voltage changes in the mains. Manual stepping is also possible when the value is greater than the voltage limit.

- Undervoltage blocking: Blocking is activated as soon as the measured value is less than the limit value.
- Overvoltage blocking: Blocking is activated as soon as the measured value is greater than the limit value.

8.4.4.1 Undervoltage blocking (P4.1)

To set the undervoltage blocking, proceed as follows:

✓ The AVR MANUAL operating mode is active.

1. Press MENU > △ until the desired parameter is displayed.
   »
2. Press AVR MANUAL to confirm the selection.
   »
3. Press AVR MANUAL to confirm the selection.
4. Press △ or ▽ to select the desired value. Alternative: Press AVR AUTO + △ or AVR AUTO + ▽ to set the value in larger steps.
5. Press AVR MANUAL to confirm the selection.
6. Press MENU to save the setting.

8.4.4.2 Overvoltage blocking (P4.2)

To set the overvoltage blocking, proceed as follows:

✓ The AVR MANUAL operating mode is active.

1. Press MENU > △ until the desired parameter is displayed.
   »
2. Press AVR MANUAL to confirm the selection.
3. Press △ until the desired parameter is displayed.
   »
4. Press AVR MANUAL to confirm the selection.
5. Press △ or ▽ to select the desired value. Alternative: Press AVR AUTO + △ or AVR AUTO + ▽ to set the value in larger steps.
6. Press AVR MANUAL to confirm the selection.
7. Press MENU to save the setting.

8.4.4.3 Activating/deactivating voltage blocking (P4.3)

✓ The AVR MANUAL operating mode is active.

1. Press MENU > △ until the desired parameter is displayed.
   »
2. Press AVR MANUAL to confirm the selection.
   »
3. Press AVR MANUAL to confirm the selection.

4. Press △ or ▽ to set the desired value (1 = active, 0 = inactive).
5. Press AVR MANUAL to confirm the selection.
6. Press MENU to save the setting.

8.4.5 Blocking function (P5)

The control unit is equipped with a blocking contact. You can use this to connect the floating contact, for example, of a door contact switch or temperature sensor. Observe the supplied connection diagram and section "Connecting the control unit at the installation site" [▶Section 7.3.3, Page 50] for this.

You cannot change the device behavior in the event of a closed blocking contact via the communication interface – you can only set this behavior locally on the control unit:
- Mode "0" = inactive: The status of the blocking contact does not affect the behavior of the device. Use this setting if you do not have a door contact switch or temperature sensor connected to the device.
- Mode "1" = active AUTO/EXTERNAL: If the blocking contact is opened, all switching operations in the operating modes AVR AUTO and EXTERNAL CONTROL are blocked by the device. Manual switching operations can still be performed in the AVR MANUAL operating mode.
- Mode "2" = active MANUAL/AUTO/EXTERNAL: If the blocking contact is opened, all switching operations in all operating modes (AVR MANUAL, AVR AUTO, and EXTERNAL CONTROL) are blocked by the device.

The ⚠ LED lights up if blocking is active.

To set the blocking function, proceed as follows:
✓ The AVR MANUAL operating mode is active.
1. Press MENU > △ until the desired parameter is displayed.
   » P5 0.0.0.0
2. Press AVR MANUAL to confirm the selection.
3. Press △ or ▽ to select the desired option.
4. Press AVR MANUAL to confirm the selection.
5. Press MENU to save the setting.

8.4.6 Target position for loss of voltage (P6)

The control unit is fitted with an integrated energy accumulator so that, in the event of a voltage failure, a tap-change operation that has been started can be reliably completed and a defined transformer transmission ratio can be reached through further switching operations.

> **i** You can only use the function "Target position for loss of voltage" in the operating modes AVR AUTO and EXTERNAL CONTROL.

This function will be triggered as soon as the control unit supply voltage falls below 80 V. It can be triggered, for example, by disconnecting the transformer or simply by interrupting the control voltage supply! Movement to the target position will be initiated after a waiting time of 10 s.

⚠ WARNING

Risc of injury due to damage to on-load tap-changer and transformer!

The inrush interlock is not active when switching to the target tap position. Movement to the target position takes place without a pause between switching operations. Both triggering this function when transformer is energized and voltage return while switching to the target tap position will result in injury due to damage to on-load tap-changer and transformer.

- Never interrupt the power supply X1 of the control unit when the transformer is energized and the function "Target position for loss of voltage" is activated.
- Only switch the transformer back on after a voltage failure once the on-load tap-changer is in the set target position (approximately 30 seconds after the voltage failed).

8.4.6.1 Setting the target position (P6.1)

You can use this parameter to set the target position. To do so, proceed as follows:

✓ The AVR MANUAL operating mode is active.

1. Press MENU > △ until the desired parameter is displayed.
   » P6
2. Press AVR MANUAL to confirm the selection.
3. Press △ until the desired parameter is displayed.
   » P6.1
4. Press AVR MANUAL to confirm the selection.
5. Press △ or ▽ to set the desired target position.
6. Press AVR MANUAL to confirm the selection.
7. Press MENU to save the setting.

8.4.6.2 Activating/deactivating target position for loss of voltage (P6.2)

You can use this parameter to activate and deactivate the function "Target position for loss of voltage". You can select the following options:

- 0 = inactive
- 1 = active

To activate or deactivate the "Target position for loss of voltage" function, proceed as follows:

✓ The AVR MANUAL operating mode is active.

1. Press MENU > △ until the desired parameter is displayed.
   » P6
2. Press AVR MANUAL to confirm the selection.
3. Press △ until the desired parameter is displayed.
   » P6.2
4. Press AVR MANUAL to confirm the selection.
   » 0
5. Press △ or ▽ to set the desired option.
6. Press AVR MANUAL to confirm the selection.
   » 0

7. Press △ until code 3 is displayed.
   »
8. Press AVR MANUAL to confirm the selection.
9. Press MENU to save the setting.

8.4.7 Number of operating positions (P7)

The control unit can be configured for different types of ECOTAP® VPD® on-load tap-changer. You must set the number of operating positions accordingly.

> When you perform the automatic adjustment (F1.1), the parameter P7 is automatically set to the correct value.

To set the number of operating positions, proceed as follows:

✓ The AVR MANUAL operating mode is active.

1. Press MENU > △ until the desired parameter is displayed.
   »
2. Press AVR MANUAL to confirm the selection.
3. Press △ or ▽ to select the desired value.
4. Press AVR MANUAL to confirm the selection.
5. Press MENU to save the setting.

8.4.8 Regulating range (P8)

You can limit the permissible regulating range as necessary. Here, you can set the lowest operating position and the highest operating position.

> The limited regulating range applies to all operating modes.
> Exception: You can move to an operating position outside of the permissible regulating range via the "Target position for loss of voltage (P6)" function.

8.4.8.1 Lowest operating position (P8.1)

You can use this parameter to set the lowest permissible operating position. To do so, proceed as follows:

✓ The AVR MANUAL operating mode is active.

1. Press MENU > △ until the desired parameter is displayed.
   »
2. Press AVR MANUAL to confirm the selection.
3. Press △ until the desired parameter is displayed.
   »
4. Press AVR MANUAL to confirm the selection.
5. Press △ or ▽ to select the desired value.
6. Press AVR MANUAL to confirm the selection.
7. Press MENU to save the setting.

8.4.8.2 Highest operating position (P8.2)

You can use this parameter to set the highest permissible operating position. To do so, proceed as follows:

✓ The AVR MANUAL operating mode is active.

1. Press MENU > ⏶ until the desired parameter is displayed.
   » P8
2. Press AVR MANUAL to confirm the selection.
3. Press ⏶ until the desired parameter is displayed.
   » P8.2
4. Press AVR MANUAL to confirm the selection.
5. Press ⏶ or ⏷ to select the desired value.
6. Press AVR MANUAL to confirm the selection.
7. Press MENU to save the setting.

8.4.9 Remote behavior (P9)

You can use this parameter to set the remote behavior of the device in connection with the ECOTAP® VPD® CONTROL PRO control unit. This setting only has an effect in the EXTERNAL CONTROL operating mode. You can select the following options:

- 0 = local: In the EXTERNAL CONTROL operating mode, automatic voltage regulation is performed via the ECOTAP® VPD® CONTROL PRO control unit. Control commands via SCADA are not possible.
- 1 = remote: In the EXTERNAL CONTROL operating mode, you can select the desired operating mode via SCADA command:
  - Automatic voltage regulation via the ECOTAP VPD CONTROL PRO control unit
  - Manual tap-change operations via SCADA commands

To set the remote behavior, proceed as follows:

✓ The AVR MANUAL operating mode is active.

1. Press MENU > ⏶ until the desired parameter is displayed.
   » P9
2. Press AVR MANUAL to confirm the selection.
3. Press ⏶ or ⏷ to select the desired option.
4. Press AVR MANUAL to confirm the selection.
5. Press MENU to save the setting.

8.4.10 Password protection (P10)

The device is equipped with password protection in order to prevent unauthorized parameter changes via the menu. It is still possible to change the data points via the Modbus interface.

If you activate the password protection function, you must first enter the password, before you can display the parameterization menu and make settings. If you do not operate the device within 5 minutes, the device is automatically blocked again.

8.4.10.1 Setting the password (P10.1)

You can use this parameter to set the password (maximum 3 characters, factory setting 0). To do so, proceed as follows:

✓ The AVR MANUAL operating mode is active.

1. Press MENU > ▲ until the desired parameter is displayed.
   »
2. Press AVR MANUAL to confirm the selection.
3. Press ▲ until the desired parameter is displayed.
   »
4. Press AVR MANUAL to confirm the selection.
5. Press ▲ or ▼ to select the desired value. Alternative: Press AVR AUTO + ▲ or AVR AUTO + ▼ to set the value in larger steps.
6. Press AVR MANUAL to confirm the selection.
7. Press MENU to save the setting.

8.4.10.2 Activating/deactivating password protection (P10.2)

You can use this parameter to activate or deactivate the password protection function. You can select the following options:

- 0 = inactive
- 1 = active

To activate or deactivate the password protection function, proceed as follows:

✓ The AVR MANUAL operating mode is active.

1. Press MENU > ▲ until the desired parameter is displayed.
   »
2. Press AVR MANUAL to confirm the selection.
3. Press ▲ until the desired parameter is displayed.
   »
4. Press AVR MANUAL to confirm the selection.
5. Press ▲ or ▼ to set the desired option.
6. Press AVR MANUAL to confirm the selection.
7. Press MENU to save the setting.
   » The password protection function will be activated or deactivated depending on the selection.

> **i** If the password protection function is activated, operation will only be blocked when none of the control unit keys are actuated over a period longer than 5 minutes.

8.4.10.3 Entering password (C2)

If you have activated the password protection function, you must enter the password to unblock the device and to be able to call up the parameterization menu. To do so, proceed as follows:

✓ The AVR MANUAL operating mode is active.

1. Press MENU.
   »

2. Press ▲ or ▼ to select the desired value. Alternative: Press AVR AUTO + ▲ or AVR AUTO + ▼ to set the value in larger steps.
3. Press AVR MANUAL to confirm the selection.

» The device is unblocked.

8.4.11 Behavior in case of failure of communication (P12)

You can use parameter P12 to specify the operating modes after the failure and restoration of the communication, including the respective waiting times.

> **i** If communication fails or is restored, this function can be used to switch between AVR AUTO and EXTERNAL CONTROL without operator intervention.

8.4.11.1 Activate behavior in case of failure of communication (P12.1)

You can use this parameter to activate and deactivate the operating mode switchover in the event of communication failure:

- 0 = inactive
- 1 = active

Proceed as follows:

✓ The AVR MANUAL operating mode is active.

1. Press MENU > ▲ until the desired parameter is displayed.

   »
2. Press AVR MANUAL to confirm the selection.
3. Press ▲ until the desired parameter is displayed.

   » 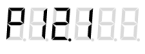
4. Press AVR MANUAL to confirm the selection.
5. Press ▲ or ▼ to set the desired option.
6. Press AVR MANUAL to confirm the selection.
7. Press MENU to save the setting.

   » The function will be activated or deactivated depending on the selection.

8.4.11.2 Waiting period T3 in case of failure of communication (P12.2)

Once the waiting time T3 has elapsed, the control unit switches over to the operating mode selected via parameter P12.3.

Proceed as follows:

✓ The AVR MANUAL operating mode is active.

1. Press MENU > ▲ until the desired parameter is displayed.

   »
2. Press AVR MANUAL to confirm the selection.
3. Press ▲ until the desired parameter is displayed.

   » 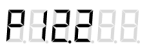
4. Press AVR MANUAL to confirm the selection.
5. Press ▲ or ▼ to set the desired value. Alternative: Press AVR AUTO + ▲ or AVR AUTO + ▼ to set the value in larger steps.

6. Press AVR MANUAL to confirm the selection.
7. Press MENU to save the setting.

8.4.11.3 Select operating mode after failure (P12.3)

You can use this parameter to specify the desired operating mode in the event of a communication failure:

- 1 = AVR AUTO
- 3 = EXTERNAL CONTROL

Proceed as follows:

✓ The AVR MANUAL operating mode is active.

1. Press MENU > ⏶ until the desired parameter is displayed.
   »
2. Press AVR MANUAL to confirm the selection.
3. Press ⏶ until the desired parameter is displayed.
   »
4. Press AVR MANUAL to confirm the selection.
5. Press ⏶ or ⏷ to set the desired option.
6. Press AVR MANUAL to confirm the selection.
7. Press MENU to save the setting.

8.4.11.4 Activate behavior when communication is restored (P12.4)

You can use this parameter to activate and deactivate the operating mode switchover when communication is restored:

- 0 = inactive
- 1 = active

Proceed as follows:

✓ The AVR MANUAL operating mode is active.

1. Press MENU > ⏶ until the desired parameter is displayed.
   »
2. Press AVR MANUAL to confirm the selection.
3. Press ⏶ until the desired parameter is displayed.
   »
4. Press AVR MANUAL to confirm the selection.
5. Press ⏶ or ⏷ to set the desired option.
6. Press AVR MANUAL to confirm the selection.
7. Press MENU to save the setting.
   » The function will be activated or deactivated depending on the selection.

8.4.11.5 Waiting period T4 when communication is restored (P12.5)

Once the waiting time T4 has elapsed, the control unit switches over to the operating mode selected via parameter P12.6.

Proceed as follows:

✓ The AVR MANUAL operating mode is active.

1. Press MENU > ⏶ until the desired parameter is displayed.

   »

2. Press AVR MANUAL to confirm the selection.
3. Press ⏶ until the desired parameter is displayed.

   »

4. Press AVR MANUAL to confirm the selection.
5. Press ⏶ or ⏷ to set the desired value. Alternative: Press AVR AUTO + ⏶ or AVR AUTO + ⏷ to set the value in larger steps.
6. Press AVR MANUAL to confirm the selection.
7. Press MENU to save the setting.

8.4.11.6 Select operating mode on restart (P12.6)

You can use this parameter to specify the desired operating mode once communication is reestablished:

- 1 = AVR AUTO
- 3 = EXTERNAL CONTROL

Proceed as follows:

✓ The AVR MANUAL operating mode is active.

1. Press MENU > ⏶ until the desired parameter is displayed.

   »

2. Press AVR MANUAL to confirm the selection.
3. Press ⏶ until the desired parameter is displayed.

   »

4. Press AVR MANUAL to confirm the selection.
5. Press ⏶ or ⏷ to set the desired option.
6. Press AVR MANUAL to confirm the selection.
7. Press MENU to save the setting.

8.4.12 Communication settings (P20)

You can set the Modbus address (P20.1) and the baud rate (P20.2) directly on the display. You must restart the communication (P20.3) to activate the new values.

You can use parameter P20.4 to specify whether the event message E1.1 ("No connection to EXTERNAL CONTROL") is also generated in the AVR AUTO operating mode.

8.4.12.1 Modbus address (P20.1) and baud rate (P20.2)

To set the Modbus address and the baud rate directly on the display, proceed as described in the following. If only one parameter is to be adjusted, the settings for the other parameters can be skipped.

Note the Modbus address setting range: 1...247.

✓ The AVR MANUAL operating mode is active.

1. Press MENU > ⏶ until the desired parameter is displayed.
   »
2. Press AVR MANUAL to confirm the selection.
3. Press ⏶ until parameter P20.1 is displayed.
   »
4. Press AVR MANUAL to confirm the selection.
5. Press ⏶ or ⏷ to set the desired value for the Modbus address.
6. Press AVR MANUAL to confirm the selection.
   »
7. Press ⏶ until parameter P20.2 is displayed.
   »
8. Press AVR MANUAL to confirm the selection.
9. Press ⏶ or ⏷ to set the desired value for the baud rate.
10. Press AVR MANUAL to confirm the selection.
    »
11. Next, restart the communication using parameter P20.3 within 5 minutes. Otherwise the new Modbus and baud rate settings will not take effect. To do so, press ⏶ until parameter P20.3 is displayed.
    »
12. Press AVR MANUAL to confirm the selection.
    »
13. Press ⏶ until code 3 is displayed.
    »
14. Press AVR MANUAL to confirm the selection.
    » The communication will be interrupted briefly and restart immediately.
    » The values currently set for the Modbus address and baud rate are now active.

8.4.12.2 Restarting the communication (P20.3)

You can use this parameter P20.3 to restart the communication.

✓ The AVR MANUAL operating mode is active.

1. Press MENU > ⏶ until the desired function is displayed.
   »
2. Press AVR MANUAL to confirm the selection.
3. Press ⏶ until the desired parameter is displayed.
   »
4. Press AVR MANUAL to confirm the selection.
   »

5. Press [▲] until code 3 is displayed.
   »
6. Press [AVR MANUAL] to confirm the selection.
   » The communication will be interrupted briefly and restart immediately.
   » Newly set values for the Modbus address and baud rate will only be adopted if the restart is made within 5 minutes.

8.4.12.3 Event message E1.1 in AVR AUTO (P20.4)

You can use this function, comparable with Coil 15, to set whether the event message E1.1 ("No connection to EXTERNAL CONTROL") is also generated in the AVR AUTO operating mode. You can select the following options:

- 0: inactive
- 1: active

✓ The AVR MANUAL operating mode is active.

› Press [MENU] > [▲] until the desired function is displayed.
   »

✓ Press [AVR MANUAL] to confirm the selection.

1. Press [▲] until the desired parameter is displayed.
   »
2. Press [AVR MANUAL] to confirm the selection.
3. Press [▲] or [▼] to select the desired option.
4. Press [AVR MANUAL] to confirm the selection.
5. Press [MENU] to save the setting.

> AVR AUTO continues to function even if event message E1.1 is displayed.

8.4.13 Adjustment (F1)

Automatic adjustment is necessary, for example, if a new control unit is connected to a tap changer. If the control unit is not yet adjusted to the tap changer, message *E4* appears on the display.

> A manual adjustment is only possible if an automatic adjustment has been carried out at least once beforehand.

8.4.13.1 Automatic adjustment (F1.1)

This function starts the automatic adjustment of the on-load tap-changer. The entire regulating range of the on-load tap-changer is passed through until the signals of the respective micro-switch for recording the end position are detected. In conclusion, the position display is synchronized with the position of the tap changer and the parameters Number of the operating positions (P7), Lowest operating position (P8.1) and Highest operating position (P8.2) are set.

Only carry out automatic adjustment with an open busbar on the low-voltage side since the on-load tap-changer moves through the entire regulating range and this can result in excessive voltage deviations for loads.

To start the automatic adjustment, proceed as follows:

✓ The AVR MANUAL operating mode is active.

1. Press MENU > △ until the desired function is displayed.
   » F1
2. Press AVR MANUAL to confirm the selection.
3. Press △ until the desired parameter is displayed.
   » F1.1
4. Press AVR MANUAL to confirm the selection.
   » C1 0
5. Press △ until code 3 is displayed.
   » C1 3
6. Press AVR MANUAL to confirm the selection.
   » Automatic adjustment starts.

» Once automatic adjustment is complete, the on-load tap-changer is in the middle operating position.

8.4.13.2 Manual adjustment n-1 (F1.2)

You can use this function to perform a manual adjustment of the on-load tap-changer starting from the current tap position through to the lowest tap position (Pos. 1). The manual adjustment does not run through the entire regulating range of the on-load tap-changer.

If you perform a manual adjustment with the busbar closed, you must check that the measured voltage is within the permitted range after the tap change operations.

To start the manual adjustment n-1 function, proceed as follows:

✓ The AVR MANUAL operating mode is active.

1. Press MENU > △ until the desired function is displayed.
   » F1
2. Press AVR MANUAL to confirm the selection.
3. Press △ until the desired parameter is displayed.
   » F1.2
4. Press AVR MANUAL to confirm the selection.
5. Press ▽ to perform one on-load tap-change operation (n-1).
   » F1.2 and the current measured voltage will be displayed in alternation.
6. Repeat step 5 until the lowest tap position (Pos. 1) has been reached.

» Manual adjustment has been completed and the values will be displayed in rotation in the display as described in section "Switching on the voltage supply" [▶Section 7.3.4, Page 56].

8.4.13.3 Manual adjustment n+1 (F1.3)

You can use this function to perform a manual adjustment of the on-load tap-changer starting from the current tap position through to the highest tap position (Pos. N). The manual adjustment does not run through the entire regulating range of the on-load tap-changer.

> If you perform a manual adjustment with the busbar closed, you must check that the measured voltage is within the permitted range after the tap change operations.

To start the manual adjustment n+1 function, proceed as follows:

✓ The AVR MANUAL operating mode is active.

1. Press MENU > △ until the desired function is displayed.
   »
2. Press AVR MANUAL to confirm the selection.
3. Press △ until the desired parameter is displayed.
   »
4. Press AVR MANUAL to confirm the selection.
5. Press △ to perform one on-load tap-change operation (n+1).
   » F1.3 and the current measured voltage will be displayed in alternation.
6. Repeat step 5 until the highest tap position (Pos. N) has been reached.

» Manual adjustment has been completed and the values will be displayed in rotation in the display as described in section "Switching on the voltage supply" [▶Section 7.3.4, Page 56].

8.4.14 Reading remaining life (F2)

With the function "Read remaining life", you can request the current status (as a percentage).

> If the remaining life is less than or equal to 1(%), contact the Maschinenfabrik Reinhausen GmbH's Technical Service department.

For functional reasons, the remaining life drops more quickly at the beginning of the product life cycle and the curve becomes flatter as the operating time increases:

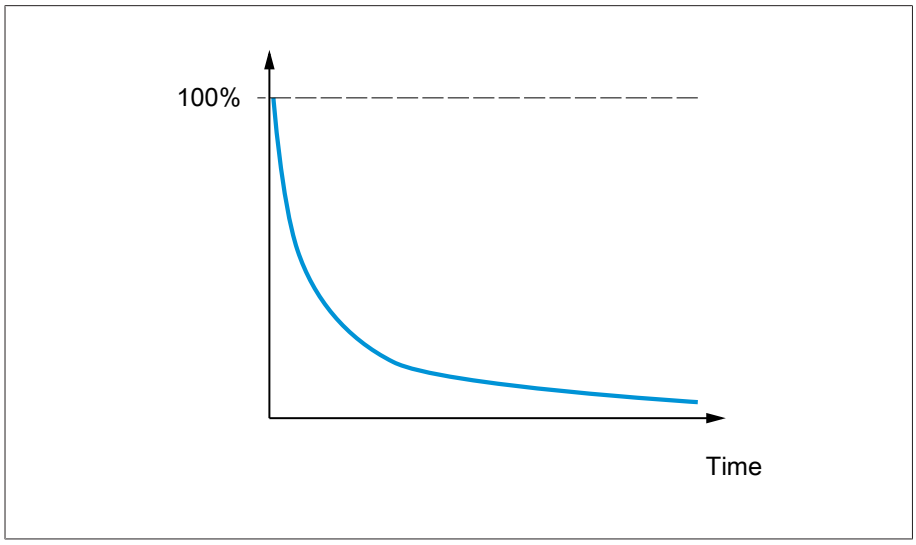

Figure 52: Typical progression of the remaining life

The progression is influenced by external influences – in particular high ambient temperatures – and is subject to certain fluctuations. With regular observation, the progression of the remaining service life can be better estimated. Recommendation:

› Read off and note remaining life annually.

A remaining lifetime of 0% does not necessarily lead to blocking.

The controller monitors the capacity and voltage of the energy accumulator to prevent undefined switching states. As a result, switching commands are only executed if there is sufficient energy to reach the preselected target position even in the event of a voltage failure.

Switching commands are blocked if error message E5.2 (undervoltage) is present during a pre-check.

Event	Necessary action
Remaining life = 1% => no blocking	Contact the Maschinenfabrik Reinhausen GmbH Technical Service. Prepare control unit replacement. Monitor event messages constantly.
Controller detects undercapacity in operation – Error message E5.1 – No blocking	Control unit replacement recommended.
Controller detects undervoltage in operation – Error message E5.2 – No blocking	Control unit replacement recommended.
Pre-check detects voltage drop under load – Error message E5.2 (undervoltage) – Error message E2.4 (energy in energy accumulator too low.) – Tap-change operations blocked	Control unit replacement necessary.

Table 18: Remaining life recommendations for action

To start the remaining life query, proceed as follows:

✓ The AVR MANUAL operating mode is active.

1. Press MENU > ⏶ until the desired function is displayed.
   »
2. Press AVR MANUAL to confirm the selection.
   » The remaining life is displayed as a percentage value.
3. Press AVR MANUAL to exit the display.
4. Press MENU to leave the parameterization menu.

8.4.15 LED function test (F3)

You can use this function to test the function of all LEDs and the display on the front of the control unit. To do so, proceed as follows:

✓ The AVR MANUAL operating mode is active.

1. MENU > Press ⏶ until the desired function is displayed.
   »
2. Press AVR MANUAL to confirm the selection.
   » All display elements on the front of the control unit light up.
3. Press AVR MANUAL to exit the display.
4. Press MENU to leave the parameterization menu.

8.4.16 Software update (F4)

This function is not currently available.

8.4.17 Invert travel commands (F5)

You can use this parameter to invert the travel commands. You can use this to adjust the behavior of the device based on how your on-load tap-changer and motor-drive unit are configured. You can select the following options:

Setting	Meaning
0	Normal configuration: – Lowest voltage (low-voltage side) in operating position 1 – Highest voltage (low-voltage side) in operating position n
1	Inverted configuration: – Highest voltage (low-voltage side) in operating position 1 – Lowest voltage (low-voltage side) in operating position n

Table 19: Behavior

To set this function, proceed as follows:

✓ The AVR MANUAL operating mode is active.

1. Press MENU > ⏶ until the desired function is displayed.
   »
2. Press AVR MANUAL to confirm the selection.
3. Press ⏶ or ⏷ to select the desired option.
4. Press AVR MANUAL to confirm the selection.

5. Press MENU to save the setting.

8.4.18 Read out software version (F6)

To read out the software version, proceed as follows:

✓ The AVR MANUAL operating mode is active.

1. Press MENU > ⏶ until the desired function is displayed.
   » F6
2. Press AVR MANUAL to confirm the selection.
   » The software version of the control unit will be displayed in the "YYMMDD" (year, month, date) format.
3. Press AVR MANUAL to exit the display.
4. Press MENU to leave the parameterization menu.

8.4.19 Customer message for event messages E1.1 and E2 (F7)

You can set whether the event messages E1.1 ("*No connection to the EXTERNAL CONTROL*") and E2 ("*EXTERNAL CONTROL command could not be executed*") are to be reported via the customer messages interface *STATUS OK/ERROR* (terminal X5). All further event messages will always be reported via the customer messages interface *STATUS OK/ERROR* (terminal X5).

8.4.19.1 Customer message for event message E1.1 (F7.1)

You can use this function to set whether the event message E1.1 ("*No connection to the EXTERNAL CONTROL*") is to be reported via the customer messages interface *STATUS OK/ERROR* (terminal X5). You can select the following options:

- 0: inactive
- 1: active

To set the customer message for event message E1.1, proceed as follows:

✓ The AVR MANUAL operating mode is active.

1. Press MENU > ⏶ until the desired function is displayed.
   » F7
2. Press AVR MANUAL to confirm the selection.
   » F7.1
3. Press AVR MANUAL to confirm the selection.
4. Press ⏶ or ⏷ to select the desired option.
5. Press AVR MANUAL to confirm the selection.
6. Press MENU to save the setting.

8.4.19.2 Customer message for event message E2 (F7.2)

You can use this function to set whether the event message E2 *("EXTERNAL CONTROL command could not be executed")* is to be reported via the customer messages interface *STATUS OK/ERROR* (terminal X5). You can select the following options:

- 0: inactive
- 1: active

To set the customer message for event message E2, proceed as follows:

✓ The AVR MANUAL operating mode is active.

1. Press MENU > △ until the desired function is displayed.
   » F7
2. Press AVR MANUAL to confirm the selection.
3. Press △ until the desired parameter is displayed.
   » F7.2
4. Press AVR MANUAL to confirm the selection.
5. Press △ or ▽ to select the desired option.
6. Press AVR MANUAL to confirm the selection.
7. Press MENU to save the setting.

8.4.20 Reset to factory setting (F8)

You can use this function to reset the device to the factory settings [▶Section 13, Page 127].

> Note all parameters before resetting to factory settings.
> After resetting, check that all parameters are suitable for the application, in particular the blocking function (P5).

✓ The AVR MANUAL operating mode is active.

1. Press MENU > △ until the desired function is displayed.
   » F8
2. Press AVR MANUAL to confirm the selection.
   » C1
3. Press △ until code 3 is displayed.
   » C3
4. Press AVR MANUAL to confirm the selection and to return to the rolling display.
   » The device is reset to the factory settings.

8.4.21 Display control parameters (F9)

You can use this function to check the set values of the device. Here, the device successively displays the parameter designation and set values of the following parameters and functions:

- Parameters P1...P9, P12 and P20
- Functions F2, F5, F6, F7.1 and F7.2

For devices with the optional DS function, the following parameters are also displayed:

- Parameters P11.1...P11.14

To check the control parameters, proceed as follows:

✓ The AVR MANUAL operating mode is active.

1. Press MENU > △ until the desired function is displayed.
   » F9
2. Press AVR MANUAL to confirm the selection.
   » The display shows the parameter designation and set value successively.
3. Press AVR MANUAL to exit the display.
4. Press MENU to leave the parameterization menu.

> With the function "Display control parameters (F9)" you can speed up the change to the next parameter by quickly pressing the arrow keys. When you do so, the set values will no longer be displayed.
> Once you stop pressing the arrow keys, the parameter designation and set value will be displayed one after the other.
> If you want to make a note a value, you can stop the alternating display by holding down the AVR AUTO button.

8.4.22 Control parameters and measured values of the DS function (F10)

You can use the following two functions to check the desired value for voltage regulation, U_{ref}, the active power and the current (3-phase with F10.1 and 1-phase with F10.2), as well as the parameter P11.1 (DS function on/off). The display is rolling.

The 3-phase active power is determined through the multiplication of the measured 1-phase active power by 3.

> The 3-phase active power displayed only applies for a symmetrically loaded transformer. Only in this case is it possible to make a statement on the measurement accuracy; see the Technical data chapter. No statement can be made about the measuring accuracy in the case of asymmetrical loading.

You can use the function F10.3 to extend the rolling standard display and function F10.4 to reset the stored min/max values of the optional DS function.

8.4.22.1 Displaying the 3-phase measured values of the DS function (F10.1)

You can use the function F10.1 to check the desired value for voltage regulation, U_{ref}, the 3-phase active power, the 1-phase current and the parameter P11.1 (DS function on/off). The display is rolling.

✓ The AVR MANUAL operating mode is active.

1. Press MENU > △ until the desired function is displayed.
   » F10
2. Press AVR MANUAL to confirm the selection.
3. Press △ until the desired parameter is displayed.
   » F10.1

4. Press AVR MANUAL to confirm the selection.
   » The display switches between the parameters and measured values as listed below one after the other once a second, starting with the brief designation and then the value.
5. Press AVR MANUAL to exit the display.
6. Press MENU to leave the parameterization menu.

Result: Rolling display

Description	Display (brief description, example value)
Desired value for voltage regulation	1 Ur
Value U_{ref} [V], 1-phase L/N	230.0
Current measured power	3 P
Value P, 3-phase [kW]	400.0
Current measured current	1 I
Value I, 1-phase [A]	579.7
Parameter P11.1 status	P11.1
ON = 1 or OFF = 0	1

8.4.22.2 Displaying the 1-phase measured values of the DS function (F10.2)

You can use the function F10.2 to check the desired value for voltage regulation, U_{ref}, the 1-phase active power, the 1-phase current and the parameter P11.1 (DS function on/off). The display is rolling.

✓ The AVR MANUAL operating mode is active.

1. Press MENU > △ until the desired function is displayed.
   » F10
2. Press AVR MANUAL to confirm the selection.
3. Press △ until the desired parameter is displayed.
   » F10.2
4. Press AVR MANUAL to confirm the selection.
   » The display switches between the parameters and measured values as listed below one after the other once a second, starting with the brief designation and then the value.
5. Press AVR MANUAL to exit the display.
6. Press MENU to leave the parameterization menu.

Result: Rolling display

Description	Display (brief description, example value)
Desired value for voltage regulation	1 Ur
Value U_{ref} [V], 1-phase L/N	230.0
Current measured power	1 P
Value P, 1-phase [kW]	133.3
Current measured current	1 I

Description	Display (brief description, example value)
Value I, 1-phase [A]	579.7
Phase angle between voltage and current	COSPHI
Value PHI [°]	0.0
Parameter P11.1 status	P11.1
ON = 1 or OFF = 0	1

8.4.22.3 Extending the rolling standard display (F10.3)

You can use the function F10.3 to select whether the additional values from F10.1 or F10.2 are also displayed in the rolling display:

Value	Display in the rolling display
0	No additional data
1	Plus F10.1 data
2	Plus F10.2 data

✓ The AVR MANUAL operating mode is active.

1. Press MENU > ▲ until the desired function is displayed.
   » F10
2. Press AVR MANUAL to confirm the selection.
3. Press ▲ until the desired parameter is displayed.
   » F10.3
4. Press AVR MANUAL to confirm the selection.
5. Press ▲ or ▼ to set the desired value.
6. Press AVR MANUAL to exit the display.
7. Press MENU to save the setting.

8.4.22.4 Resetting the measured values of the optional DS function (F10.4)

To reset the stored min/max values of the DS function (see: Input register (with option DS) [▶Section 9.4.4, Page 108]), proceed as follows:

✓ The AVR MANUAL operating mode is active.

1. Press MENU > ▲ until the desired function is displayed.
   » F10
2. Press AVR MANUAL to confirm the selection.
3. Press ▲ until the desired parameter is displayed.
   » F10.4
4. Press AVR MANUAL to confirm the selection.
   » C1 0
5. Press ▲ until code 3 is displayed.
   » C1 3
6. Press AVR MANUAL to confirm the selection.
   » The min/max values are deleted.

8.4.23 Displaying event memory (E)

The event memory will show you the saved event codes. You can find an overview of the event codes in the Event messages [▶Section 12.2, Page 125] section.

The event memory has 20 memory slots and displays the last 20 entries. Memory slot 1 is the latest entry, memory slot 20 is the earliest entry. The device records the number of tap-change operations when an event message happens or is reset.

A memory slot entry contains the following information:
- Event code
- Number of tap-change operations

If an entry only includes the number of tap-change operations and not an event code, this means that the event code in the previous memory slot was reset at this number of tap-change operations.

With the exception of event code *E6*, all event codes are reset once the fault has been eliminated and the next correct tap-change operation has been completed. Event code *E6* can only be reset by the Maschinenfabrik Reinhausen GmbH Technical Service department.

To display the event memory, proceed as follows:

✓ The AVR MANUAL operating mode is active.

1. Press MENU > ⏶ repeatedly until the first memory slot in the event memory is displayed.
   »
2. Press ⏶ or ⏷ to select the desired memory slot.
   »
3. Press AVR MANUAL to call up the memory slot.
   » The event code or a number of tap-change operations will be displayed.
   »
4. Press AVR MANUAL to display further event codes. If there are no further event codes present, the number of tap-change operations will be displayed.
   »
5. Press AVR MANUAL to exit the memory slot.

9 Control system protocol

9.1 Modbus RTU Parameters

These parameters remain permanently stored even in the event of a voltage failure. Status bits are queried again when the power returns.

The device uses the Modbus RTU control system protocol (master-slave communication) with the following parameters:

Device parameters upon delivery

Parameter	Material No. 10169147XX	Material No. 10169148XX	Material No. 10161997XX
Transmission format	RTU	RTU	RTU
Serial interface	RS485	RS485	RS485
Baud rate [baud]	38400	19200	38400
Modbus address (slave)	1	51	1
Number of data bits	8	8	8
Parity	Even	Even	Even
Number of stop bits	1	1	1

Table 20: Device parameters upon delivery

Adjustable device parameters

Parameter	Modbus RTU
Baud rate [baud]	9600, 19200, 38400, 57600
Modbus address (slave)	1...247

Table 21: Device parameter setting range

The baud rate is only changed after the communication is restarted. You can do this in two ways:

1. By activating Code 3 directly on the display via parameter P20.3 [▶Section 8.4.12.2, Page 89].
2. By triggering function FC8.1, "Restart Communications Option", by setting the data point Coil 17.

If the communication is not restarted within 5 minutes, the change is not adopted.

9.2 Function codes

Function code	Group description	R = read / W = write
01 (0x01)	Read discrete output coil	R
02 (0x02)	Read discrete input contact	R
03 (0x03)	Read analog output holding registers	R
04 (0x04)	Read analog input register	R
05 (0x05)	Write discrete output coil	W
06 (0x06)	Write analog output holding registers	W
15 (0x0F)	Write multiple discrete output coil	W
16 (0x10)	Write multiple analog output holding registers	W

Table 22: Function codes

9.3 Data format

Type	Description	Range
BIT	1 bit	0, 1 (= OFF, ON)
UINT16	unsigned integer 16 bit	0...65 535
SINT16	signed integer 16 bit	-32 768...+32 768
SINT32	signed integer 32 bit	-2.147483648×10^9... $+2.147483648 \times 10^9$
FLOAT32	32 bit (single precision) according to IEEE 754	IEEE 754

Table 23: Data format

For the data types SINT32 and FLOAT32 applies:
- Address X: MSW (Most Significant Word)
- Address X+1: LSW (Least Significant Word)
- Example SINT32: Operations counter
- Holding register 2: MSW
- Holding register 3: LSW
- Beispiel FLOAT32: Input voltage
- Input register 12: MSW
- Input register 13: LSW

9.4 Data points (single inquiry)

9.4.1 Coils

Address (no offset)	Name	Type	Status	EXTERNAL CONTROL R = read / W = write	
				CONTROL PRO	Others
0[1)]	Change tap position raise	BIT	1 = raise	R/W	R/W
1[1)]	Change tap position lower	BIT	1 = lower	R/W	R/W
2	P9: Parameter local/remote	BIT	1 = remote	R	R
3	Error ISM	BIT	1 = error	R/W	R/W
4[2)]	P5: Blocking activation, mode 1	BIT	1 = active	R	R
5	Internal data point	BIT	-	-	-
6	Internal data point	BIT	-	-	-
7	F5: Command inverted	BIT	1 = active	R	R/W
8	Internal data point	BIT	-	-	-
9	Internal data point	BIT	-	-	-
10	F7.1: E1.1 to relay output	BIT	1 = active	R	R/W
11	F7.2: E2 to relay output	BIT	1 = active	R	R/W
12[2)]	P5: Blocking activation, mode 2	BIT	1 = active	-	R
13[3)]	Initiate mechanical PreCheck (test)	BIT	1 = active	-	R/W
14[4)]	Release of multiple tap-change operation	BIT	1 = active	-	R
15[5)]	P20.4: E1.1 at AVR AUTO	BIT	1 = active	-	R/W
16	P4.3: Voltage blocking activation/deactivation	BIT	1 = active	-	R/W
17[1)]	P20.3/FC8.1: Restart Communications Option	BIT	1 = active	R/W	R/W
18[6)]	F10.3: Display additional parameters (DS 3-phase)	BIT	1 = active	R/W	R/W
19[6)]	F10.3: Display additional parameters (DS 1-phase)	BIT	1 = active	R/W	R/W
20...31	Internal data point	BIT	-	-	-

Table 24: Coils

With the exception of coils 0, 1 and 17, all other coils retain the last transmitted state and can thus be controlled both cyclically and in pulses.

[1)] Writing a "1" triggers a command, e.g. a drive command. Once the command has been executed, the COIL is reset to "0" by the controller.

[2] Activation of the Blocking function (P5) [▶Section 8.4.5, Page 81]

Address 4	Address 12	Result
0	0	Mode 0 = inactive
1	0	Mode 1 = blocking in operating mode AUTO/EXTERNAL
0	1	Mode 2 = blocking in operating mode MANUAL/AUTO/EXTERNAL
1	1	Cannot be set

Table 25: blocking function mode

[3] If a PreCheck is initiated via Coil 13, the timer is reset (input register 10: "Remaining time to the next PreCheck").

[4] Multiple switching (option, not standard) must be activated via Coil 14. Otherwise holding register 17 remains inactive.

[5] Set status to 1 if Event E1.1 [▶Section 12.2, Page 125] is also to be displayed in the operating mode AVR AUTO. AVR AUTO continues to function even if event message E1.1 is displayed.

[6] Extension of the data shown in the rolling display

Address 18	Address 19	Result
0	0	No additional data
1	0	Plus F10.1 data (DS 3-phase)
0	1	Plus F10.2 data (DS 1-phase)
1	1	Cannot be set

Table 26: Extension to the rolling display

9.4.2 Discrete Inputs

Address (no offset)	Name	Type	Status	EXTERNAL CONTROL R = read / W = write	
				CONTROL PRO	Others
0	E1.1 No connection to EXTERNAL CONTROL	BIT	1 = active	R	R
1	E2 EXTERNAL CONTROL command could not be performed	BIT	1 = active	R	R
2	E3.1 Error mosfet switch	BIT	1 = active	R	R
3	E3.2 Error direction of rotation	BIT	1 = active	R	R
4	E3.3 Time delay microswitch	BIT	1 = active	R	R
5	E3.4 Both end microswitch active or not wired	BIT	1 = active	R	R
6	E4.1 Automatic adjustment not undertaken or incorrect	BIT	1 = active	R	R
7	E4.2 Desired target position could not be reached when voltage failed (error blackstart)	BIT	1 = active	R	R
8	E5.1 Residual capacity buffer	BIT	1 = active	R	R
9	E5.2 Undervoltage buffer	BIT	1 = active	R	R
10	E5.3 Error power supply	BIT	1 = active	R	R
11	E6.1 Motor blocking	BIT	1 = active	R	R
12	E6.2 Motor rough-running	BIT	1 = active	R	R
13	E6.3 Tap change command cannot be performed, timeout motor run	BIT	1 = active	R	R
14	E7.1 Permanent signal microswitch	BIT	1 = active	R	R
15	E7.2 Position fail, loss microswitch	BIT	1 = active	R	R
16	Internal data point	BIT	-	-	-
17	Internal data point	BIT	-	-	-
18	Internal data point	BIT	-	-	-
19	Internal data point	BIT	-	-	-
20	Signal: blocking contact	BIT	0 = door open 1 = door closed	R	R
21[1)]	Relay OK	BIT	1 = active	R	R
22[1)]	Relay error	BIT	1 = active	R	R
23[2)]	E2.1 Highest or lowest operating position reached	BIT	1 = active	R	R
24[2)]	E2.2 Previous tap-change operation has not been completed or fault motor-drive unit	BIT	1 = active	R	R
25[2)]	E2.3 Inrush interlock is active or automatic adjustment required	BIT	1 = active	R	R
26[2)]	E2.4 Energy in the energy accumulator too low	BIT	1 = active	R	R
27[2)]	E2.5 Signal for blocking activated (door interlock or temperature blocking)	BIT	1 = active	R	R
28	Motor drive running	BIT	1 = active	R	R
29[1)]	Ready for tap-change operation	BIT	1 = active	R	R

Address (no offset)	Name	Type	Status	EXTERNAL CONTROL R = read / W = write	
				CONTROL PRO	Others
30	Voltage failure (detection < 60 V, communication impossible)	BIT	1 = active	R	R
31[2)]	E2.6 Error in wiring	BIT	1 = active	R	R
32200	AVR error (including E2.6, E3.x, E4.x, E5.x, E6.x and E7.x)	BIT	1 = active	-	R
32201	Out of bandwidth: Highest or lowest operating position reached + tap change command (AVR AUTO or EXTERNAL CONTROL)	BIT	1 = active	-	R

Table 27: Discrete inputs

[1)] Recurring test of the connection cable X2/X4: This test is performed automatically every 60 s and takes approx. 50 ms.
- For the duration of approx. 50 ms, the address 29 is set to 0.
- This test has no influence on addresses 21 and 22.

[2)] Event belongs to group error message E2 (Modbus address 1)

9.4.3 Input register (without option DS)

Address (no offset)	Name	Type	Unit	Decimal places	EXTERNAL CONTROL R = read / W = write	
					CONTROL PRO	Others
0, 1	Device number	SINT32	-	0	R	R
2	Capacitor health	UINT16	%	0	R	R
3	Input voltage (data value = 2 x measured value; example: measured value = 125.5 V => data value = 251)	UINT16	V	0	-	R
4	Voltage capacitor (data value = 10 x measured value; example: measured value = 10.6 V => data value = 106)	UINT16	V	0	-	R
5	Software version year (YY)	UINT16	-	0	R	R
6	Software version month (MM)	UINT16	-	0	R	R
7	Software version day (DD)	UINT16	-	0	R	R
8	Motor pause before next tap-change operation (data value = 10 x measured value; example: measured value = 3 sec. => data value = 30)	UINT16	s	-	R	R
9	Status activation Modbus RTU (1 = active, 0 = in-active)	UINT16	-	0	-	R
10	Remaining time to the next PreCheck	UINT16	min	-	-	R
11	Internal data point	UINT16	-	-	-	-
12, 13	Input voltage	FLOAT32	V	-	-	R
14, 15	Buffer voltage	FLOAT32	V	-	-	R
36600	Tap position	UINT16	-	-	-	R

Table 28: Input register (without option DS)

9.4.4 Input register (with option DS)

With the option DS, the following additional data points are available:

Address (no offset)	Name	Type	Unit	Decimal places	EXTERNAL CONTROL R = read / W = write	
					CONTROL PRO	Others
16, 17	Minimum current	FLOAT32	A	-	-	R
18, 19	Maximum current	FLOAT32	A	-	-	R
20, 21	Momentary current	FLOAT32	A	-	-	R
22, 23	Minimum voltage	FLOAT32	V	-	-	R
24, 25	Maximum voltage	FLOAT32	V	-	-	R
26, 27	Momentary voltage	FLOAT32	V	-	-	R
28, 29	Minimum phase angle	FLOAT32	°	-	-	R
30, 31	Maximum phase angle	FLOAT32	°	-	-	R
32, 33	Momentary phase angle	FLOAT32	°	-	-	R
34, 35	Minimum power (3-phase)	FLOAT32	kW	-	-	R
36, 37	Maximum power (3-phase)	FLOAT32	kW	-	-	R
38, 39	Momentary power (3-phase)	FLOAT32	kW	-	-	R
40, 41	Minimum reactive power (3-phase)	FLOAT32	kVAr	-	-	R
42, 43	Maximum reactive power (3-phase)	FLOAT32	kVAr	-	-	R
44, 45	Momentary reactive power (3-phase)	FLOAT32	kVAr	-	-	R
46-59	Internal data point	UINT16	-	-	-	-
100-104	Internal data point	UINT16	-	-	-	-
1000	Year	UINT16	-	-	-	R
1001	Month	UINT16	-	-	-	R
1002	Day	UINT16	-	-	-	R
1003	Hour	UINT16	h	-	-	R
1004	Minute	UINT16	min	-	-	R
1005	Position	UINT16	-	-	-	R
1006, 1007	Current	FLOAT32	A	-	-	R
1008, 1009	Voltage	FLOAT32	V	-	-	R
1010, 1011	Phase angle	FLOAT32	°	-	-	R
1012, 1013	Power (3-phase)	FLOAT32	kW	-	-	R
1014, 1015	Reactive power (3-phase)	FLOAT32	kVAr	-	-	R
1016	Year	UINT16	-	-	-	R
1017	Month	UINT16	-	-	-	R
1018	Day	UINT16	-	-	-	R
1019	Hour	UINT16	h	-	-	R
1020	Minute	UINT16	min	-	-	R
1021	Position	UINT16	-	-	-	R

Address (no offset)	Name	Type	Unit	Decimal places	EXTERNAL CONTROL R = read / W = write	
					CONTROL PRO	Others
1022, 1023	Current	FLOAT32	A	-	-	R
1024, 1025	Voltage	FLOAT32	V	-	-	R
1026, 1027	Phase angle	FLOAT32	°	-	-	R
1028, 1029	Power (3-phase)	FLOAT32	kW	-	-	R
1030, 1031	Reactive power (3-phase)	FLOAT32	kVAr	-	-	R
1032	Year	UINT16	-	-	-	R
1033	Month	UINT16	-	-	-	R
1034	Day	UINT16	-	-	-	R
1035	Hour	UINT16	h	-	-	R
1036	Minute	UINT16	min	-	-	R
1037	Position	UINT16	-	-	-	R
1038, 1039	Current	FLOAT32	A	-	-	R
1040, 1041	Voltage	FLOAT32	V	-	-	R
1042, 1043	Phase angle	FLOAT32	°	-	-	R
1044, 1045	Power (3-phase)	FLOAT32	kW	-	-	R
1046, 1047	Reactive power (3-phase)	FLOAT32	kVAr	-	-	R
1048	Year	UINT16	-	-	-	R
1049	Month	UINT16	-	-	-	R
1050	Day	UINT16	-	-	-	R
1051	Hour	UINT16	h	-	-	R
1052	Minute	UINT16	min	-	-	R
1053	Position	UINT16	-	-	-	R
1054, 1055	Current	FLOAT32	A	-	-	R
1056, 1057	Voltage	FLOAT32	V	-	-	R
1058, 1059	Phase angle	FLOAT32	°	-	-	R
1060, 1061	Power (3-phase)	FLOAT32	kW	-	-	R
1062, 1063	Reactive power (3-phase)	FLOAT32	kVAr	-	-	R
1064	Year	UINT16	-	-	-	R
1065	Month	UINT16	-	-	-	R
1066	Day	UINT16	-	-	-	R
1067	Hour	UINT16	h	-	-	R
1068	Minute	UINT16	min	-	-	R
1069	Position	UINT16	-	-	-	R
1070, 1071	Current	FLOAT32	A	-	-	R
1072, 1073	Voltage	FLOAT32	V	-	-	R
1074, 1075	Phase angle	FLOAT32	°	-	-	R

Address (no offset)	Name	Type	Unit	Decimal places	EXTERNAL CONTROL R = read / W = write	
					CONTROL PRO	Others
1076, 1077	Power (3-phase)	FLOAT32	kW	-	-	R
1078, 1079	Reactive power (3-phase)	FLOAT32	kVAr	-	-	R
1080	Year	UINT16	-	-	-	R
1081	Month	UINT16	-	-	-	R
1082	Day	UINT16	-	-	-	R
1083	Hour	UINT16	h	-	-	R
1084	Minute	UINT16	min	-	-	R
1085	Position	UINT16	-	-	-	R
1086, 1087	Current	FLOAT32	A	-	-	R
1088, 1089	Voltage	FLOAT32	V	-	-	R
1090, 1091	Phase angle	FLOAT32	°	-	-	R
1092, 1093	Power (3-phase)	FLOAT32	kW	-	-	R
1094, 1095	Reactive power (3-phase)	FLOAT32	kVAr	-	-	R

Table 29: Input register (with option DS)

In the address range 1000...1095, 6 values each averaged over 10 minutes and are transmitted, including the corresponding time stamp. This means you can read out the data of one hour. See footnote 2) in the section Holding register (with option DS) [▶Section 9.4.6, Page 113] for supplemental information.

Example:

1000	Year	Timestamp of the data storage
1001	Month	Timestamp of the data storage
1002	Day	Timestamp of the data storage
1003	Hour	Timestamp of the data storage
1004	Minute	Timestamp of the data storage
1005	Position	Tap position at the time of data storage

In the following address range 1006...1015, the corresponding data (current, voltage, phase angle, power and reactive power) are stored.

9.4.5 Holding register (without option DS)

Address (no offset)	Name	Type	Unit	Decimal places	EXTERNAL CONTROL R = read / W = write	
					CONTROL PRO	Others
0	Operating mode – 1 = AVR AUTO – 2 = AVR MANUAL – 3 = EXTERNAL CONTROL	UINT16	-	0	R	R
1	Tap position	UINT16	-	0	R	R
2, 3	Operations counter	SINT32	-	0	R	R
4, 5	Internal data point	SINT32	-	-	-	-
6	P1 voltage set point	UINT16	V	0	-	R/W
7	P2.1 Bandwidth B1 (data value = 2x set value; example: set value = 2.5% => data value = 5)	UINT16	%	0	-	R/W
8	P2.2 Delay time T1	UINT16	s	0	-	R/W
9	P3.1 Bandwidth B2 (data value = 2x set value; example: set value = 4.5% => data value = 9)	UINT16	%	0	-	R/W
10	P3.2 Delay time T2	UINT16	s	0	-	R/W
11	P4.1 Undervoltage blocking	UINT16	V	0	-	R/W
12	P4.2 Overvoltage blocking	UINT16	V	0	-	R/W
13	P7 Number of operating positions	UINT16	-	0	-	R/W
14	P8.1 Lowest operating position	UINT16	-	0	-	R/W
15	P8.2 Highest operating position	UINT16	-	0	-	R/W
16	P6.1 Target position for loss of voltage (black start)	UINT16	-	0	-	R/W
17[1)]	Tap-change command (-3, -2, -1, +1, +2, +3) [1)]	UINT16	-	0	-	R/W
18	Internal data point	UINT16	-	-	-	-
19, 20	P2.1 Bandwidth 1	FLOAT32	-	-	-	R
21, 22	P3.1 Bandwidth 2	FLOAT32	-	-	-	R
60	P12.1 Activate behavior in case of failure of communication	UINT16		-	-	R/W
61	P12.2 Waiting period T3 in case of failure of communication	UINT16	s	0	-	R/W
62	P12.3 Select operating mode after failure	UINT16		-	-	R/W
63	P12.4 Activate behavior when communication is restored	UINT16		-	-	R/W
64	P12.5 Waiting period T4 when communication is restored	UINT16	s	0	-	R/W
65	P12.6 Select operating mode on restart	UINT16		-	-	R/W
300[2)]	Additional function for the operating mode[2)] – 1 = AVR AUTO – 3 = EXTERNAL CONTROL	UINT16	-	-	-	R/W

Address (no offset)	Name	Type	Unit	Decimal places	EXTERNAL CONTROL R = read / W = write	
					CONTROL PRO	Others
31504... 31505	Internal data point	UINT16	-	-	-	-
31506... 31507[3)]	P20.2: Baud rate	UINT16	Baud	0	-	R/W
31508[3)]	P20.1: Modbus address	UINT32	-	0	-	R/W

Table 30: Holding register (without option DS)

[1)] With the command "Multiple switching operations" (optional), up to 3 successive switching operations can be executed without a regular pause of 3 seconds. This is followed by a cooling period of
- 3 seconds for 1 on-load tap-change operation
- 6 seconds for 2 on-load tap-change operations
- 9 seconds for 3 on-load tap-change operations.

[2)] Switch between the AVR AUTO and EXTERNAL CONTROL operating modes. For safety reasons, it is only possible to switch to the AVR MANUAL operating mode on site. Use address 0 in the holding register to read out the operating mode.

[3)] The baud rate and Modbus address are only changed after the communication is restarted. You can do this in two ways:
1. By activating Code 3 directly on the display via parameter P20.3 [►Section 8.3.11.2, page 83].
2. By triggering function FC8.1, "Restart Communications Option", by setting the data point Coil 17.

If the communication is not restarted within 5 minutes, the change is not adopted.

9.4.6 Holding register (with option DS)

With the option DS, the following additional data points are available:

Address (no offset)	Name	Type	Unit	Decimal places	EXTERNAL CONTROL R = read / W = write	
					CONTROL PRO	Others
23	P11.1 Function DS: 1 = on, 0 = off	UINT16	-	-	-	R/W
24	P11.2 Transformer nominal power $S_{r(Tr)}$	UINT16	kVA	0	-	R/W
25[1)]	P11.3 Desired value U_0 for active power P_0	UINT16	V	1	-	R/W
26	P11.4 Value representation selection for P11.5 U_{min}: 0 = absolute, 1 = relative	UINT16	-	-	-	R/W
27[1)]	With option P11.4 = absolute: P11.5 U_{min} in [V]	INT16	V	1	-	R/W
	With option P11.4 = relative: P11.5 U_{min} related to P11.3	INT16	%	1	-	R/W
28	P11.6 Value representation selection for P11.7 U_{max}: 0 = absolute, 1 = relative	UINT16	-	-	-	R/W
29[1)]	With option P11.6 = absolute: P11.7 U_{max} in [V]	INT16	V	1	-	R/W
	With option P11.6 = relative: P11.7 U_{min} related to P11.3	INT16	%	1	-	R/W
30	P11.8 Value representation selection for 11.9 P_0: 0 = absolute, 1 = relative	UINT16	-	-	-	R/W
31[1)]	With option P11.8 = absolute: P11.9 P_0 in [kW]	INT16	kW	1	-	R/W
	With option P11.8 = relative: P11.9 P_0 related to P11.2	INT16	%	1	-	R/W
32	P11.10 Value representation selection for P11.11 P_{min}: 0 = absolute, 1 = relative	UINT16	-	-	-	R/W
33[1)]	With option P11.10 = absolute: P11.11 P_{min} (active power at desired value U_{min}) in [kW]	INT16	kW	1	-	R/W
	With option P11.10 = relative: P11.11 P_{min} (active power at desired value U_{min}) related to P11.2	INT16	%	1	-	R/W
34	P11.12 Value representation selection for P11.13 P_{max}: 0 = absolute, 1 = relative	UINT16	-	-	-	R/W
35[1)]	With option P11.12 = absolute: P11.13 P_{max} (active power at desired value U_{max}) in [kW]	INT16	kW	1	-	R/W
	With option P11.12 = relative: P11.13 P_{max} (active power at desired value U_{max}) related to P11.2	INT16	%	1	-	R/W
36[1)]	P11.14 Current transformer ratio	UINT16	-	1	-	R/W
37-59	Internal data point	UINT16	-	-	-	-
100[2)]	Pointer to data block in flash DDDHH	UINT 16	-	-	-	-

Address (no offset)	Name	Type	Unit	Decimal places	EXTERNAL CONTROL R = read / W = write	
					CONTROL PRO	Others
101 - 115	Internal data point	UINT 16	-	-	-	-
116	Initialization timestamp: second	UINT 16	s	0	R/W	R/W
117	Initialization timestamp: minute	UINT 16	min	0	R/W	R/W
118	Initialization timestamp: hour	UINT 16	h	0	R/W	R/W
119	Initialization timestamp: weekday	UINT 16	-	0	R/W	R/W
120	Initialization timestamp: day	UINT 16	-	0	R/W	R/W
121	Initialization timestamp: month	UINT 16	-	0	R/W	R/W
122	Initialization timestamp: year	UINT 16	-	0	R/W	R/W
123-131	Internal data point	UINT 16	-	-	-	-
300[3)]	Additional function for the operating mode[3)]	UINT 16	-	-	-	R/W

Table 31: Holding register (with option DS)

[1)] A decimal place is only available for the display (= real value), not for the data point value (Modbus RTU). The data point value results from the real value by multiplication with the factor 10.
Example: Real value = 220.5 V => Data point value (Modbus RTU) = 2205.

[2)] Addition to holding register address 100: DDDHH

D = day (Day)	Setting range: 0...369
DDD = 000	Current day
DDD = 010	10 stored days back
DDD = 369	Maximum value (369 days back = 1 year + reserve days)
H = hour (Hour)	Setting range: 0...23
HH = 14	2:00–2:50 pm

– When you read the data from the measured value memory (input register 1000...1095), the pointer (holding register 100) is automatically incremented with each read operation.

[3)] Switch between the AVR AUTO and EXTERNAL CONTROL operating modes. For safety reasons, it is only possible to switch to the AVR MANUAL operating mode on site. Use address 0 in the holding register to read out the operating mode.

9.4.7 Function Code 8 – Diagnostics

Subfunction code	Function
FC8.1	Restart Communications Option
FC8.10	Clear Counters and Diagnostic Register
FC8.11	Return Bus Message Count
FC8.12	Return Bus Communication
FC8.13	Return Bus Exception Error Count
FC8.14	Return Server Message Count
FC8.15	Return Server No Response Count
FC8.16	Return Server NAK Count
FC8.17	Return Server Busy Count

Table 32: Function Code 8 – Diagnostics

9.5 Data points (collective inquiry)

Address (no offset)	Range	Parameter	Description	Type	Value	R/W Others
201	0	E1.1	No connection to EXTERNAL CONTROL	BIT	0 = ok 1 = error	R
201	1	E2	EXTERNAL CONTROL command could not be performed	BIT	0 = ok 1 = error	R
201	2 3 4	E3.1 E3.2 E3.3 E3.4	Error in connection between control unit and motor-drive unit	BIT	0 = ok 1 = error	R
201	6	E4.1	Automatic adjustment not undertaken or incorrect	BIT	0 = ok 1 = error	R
201	7	E4.2	The desired target position could not be reached when voltage failed.	BIT	0 = ok 1 = error	R
201	8 9 10	E5.1 E5.2 E5.3	System not ready	BIT	0 = ok 1 = error	R
201	11 12 13	E6.1 E6.2 E6.3	Tap change command cannot be performed	BIT	0 = ok 1 = error	R
201	14 15	E7.1 E7.2	Correct positioning not possible	BIT	0 = ok 1 = error	R
202	4	n/a	Blocking contact	BIT	1 = ok	R
202	5	n/a	Relay OK	BIT	1 = ok	R
202	6	n/a	Relay ERROR	BIT	1 = error	R
202	7	E2.1	Highest or lowest operating position reached	BIT	0 = ok 1 = error	R
202	8	E2.2	Previous tap-change operation has not been completed or fault motor-drive unit	BIT	0 = ok 1 = error	R
202	9	E2.3	Inrush interlock is active or automatic adjustment required	BIT	0 = ok 1 = error	R
202	10	E2.4	Energy in the energy accumulator too low	BIT	0 = ok 1 = error	R
202	11	E2.5	Signal for blocking activated (door interlock or temperature blocking)	BIT	0 = ok 1 = error	R
202	12		Motor drive running	BIT	1 = motor running	R
202	13		Ready for tap-change operation	BIT	1 = ready	R
202	14		Voltage failure	BIT	0 = ok, 1 = error	R
202	15	E2.6	No connection to OLTC	BIT	0 = ok 1 = error	R

Address (no offset)	Range	Parameter	Description	Type	Value	R/W Others
203	0...15		Operating mode	UINT16	1 = AVR AUTO 2 = AVR MANUAL 3 = EXTERNAL CONTROL	R
204	0...15		Current tap position	UINT16	1...15	R
205, 206	0...31		Counter	SINT32		R
207	0...15		Cooling time motor drive after tap change	UINT16	e. g. value "12" = 1.2 s	R
209	0...15		Hardware version year (18, high-byte), month (19, low-byte)	UINT16	0...65 535	R
210	0...15		Firmware version (1/2) month (21, high-byte) year (22, low-byte)	UINT16	0...65 535	R
211	0...15		Reserve: Firmware-Version (2/2) day (23, low-Byte)	UINT16	0...65 535	R
212	0...15		Reserve	UINT16	0...65 535	R
213	0...15		Reserve	UINT16	0...65 535	R
214	0...15		Reserve	UINT16	0...65 535	R
215	0...15		Reserve	UINT16	0...65 535	R
216	0...15		Reserve	UINT16	0...65 535	R
217	0...15		Reserve	UINT16	0...65 535	R
218	0...15		Reserve	UINT16	0...65 535	R
219	0...15		Reserve	UINT16	0...65 535	R
220	0...15		Remaining time to the next PreCheck [min]	UINT16	0...65 535	R
401[1)]	0...15		Multiple tap changes	SINT16	-3 to +3	W
403	0		Testing PreCheck	BIT	1 = active	W
404	0...15		Write 212	UINT16	0...65 535	W
405	0...15		Write 213	UINT16	0...65 535	W
406	0...15		Write 214	UINT16	0...65 535	W
407	0...15		Write 215	UINT16	0...65 535	W
408	0...15		Write 216	UINT16	0...65 535	W
409	0...15		Write 217	UINT16	0...65 535	W
410	0...15		Write 218	UINT16	0...65 535	W
411	0...15		Write 219	UINT16	0...65 535	W

Table 33: Data points

[1)] With the command "Multiple switching operations" (optional), up to 3 successive switching operations can be executed without a regular pause of 3 seconds. This is followed by a cooling period of
- 3 seconds for 1 on-load tap-change operation
- 6 seconds for 2 on-load tap-change operations
- 9 seconds for 3 on-load tap-change operations.

10 Fault elimination

> The transformer can be operated in the current operating position safely despite the red signal light. Further switching operations are blocked.

10.1 General faults

Characteristics/details	Cause	Remedy
No function – ⏻ LED not lit up	No voltage supply	Check the voltage supply.
	Device-internal fuse (F1) tripped	Check fuse (F1) [▶Section 4.4.1, Page 17] and replace if necessary.

Table 34: General faults

10.2 Problem with automatic voltage regulation (AVR AUTO)

Characteristics/details	Cause	Remedy
Automatic voltage regulation not functioning.	Bandwidth set too high.	Check parameter "Bandwidth B1" (P2.1) [▶Section 8.4.1.2, Page 67].
Automatic voltage regulation not functioning. – The on-load tap-changer is in the end position. – Travel commands for regulating the measured voltage are in the wrong direction.	Function "Invert travel commands (F5)" is set incorrectly.	Check "Invert travel commands (F5)" function [▶Section 8.4.17, Page 94].
Automatic voltage regulation is blocked. – ⚠ LED is lit. – The display does not show an event code.	Blocking function is activated and blocking contact (X3) is open.	Check signal source. Set blocking function (P5) [▶Section 8.4.5, Page 81].
	Collective message from ECOTAP® VPD® CONTROL PRO.	Check the ECOTAP® VPD® CONTROL PRO.
Automatic voltage regulation is blocked. – ⚠ LED is lit. – The display shows an event code, e.g. "E6".	Event code is present.	Displaying event memory [▶Section 8.4.23, Page 100]. Check event messages [▶Section 12.2, Page 125]. Check the wiring of all connections in accordance with the supplied connection diagram.
Automatic voltage regulation is blocked.	Voltage blocking is active.	Check voltage blocking settings [▶Section 8.4.4, Page 80].

Characteristics/details	Cause	Remedy
The regulating range of the transformer cannot be used.	The parameter "Number of operating positions (P7)" does not match the on-load tap-changer.	Check parameter "Number of operating positions (P7)" [▶Section 8.4.7, Page 83].
	Regulating range limited.	Check regulating range settings [▶Section 8.4.8, Page 83].

Table 35: Problem with automatic voltage regulation (AVR AUTO)

10.3 Other faults

In the event of faults on the on-load tap-changer, motor-drive unit, or control unit which cannot be easily corrected on site, please inform your authorized MR representative, the transformer manufacturer or contact Maschinenfabrik Reinhausen GmbH (MR) directly.

Please have the following data ready:
- Serial number (nameplate)
- Control unit software version [▶Section 11.1.3, Page 121]

Contact address

Maschinenfabrik Reinhausen GmbH
Technical Service
Postfach 12 03 60
93025 Regensburg
Deutschland
+49 941 40 90-0
service@reinhausen.com
www.reinhausen.com

You will find an overview of the services available for the product in the customer portal: https://portal.reinhausen.com

11 Maintenance

⚠ DANGER

Electric shock!

An energized transformer could cause death or serious injuries.

- Switch off transformer on high and low-voltage side.
- Lock transformer to prevent unintentional restart.
- Ensure that everything is de-energized.
- Visibly connect all transformer terminals to ground (grounding leads, grounding disconnectors) and short circuit them.
- Cover or cordon off adjacent energized parts.

⚠ DANGER

Electric shock!

Working on the on-load tap-changer when components are energized can lead to death or serious injuries.

- De-energize all auxiliary circuits, such as the tap-change supervisory device, pressure relief device, pressure monitoring device.
- Ensure that everything is de-energized.

⚠ WARNING

Danger of explosion.

Explosive gases in the transformer, pipe system, oil conservator and at the dehydrating breather opening can deflagrate or explode and result in severe injury or death.

- Ensure that there are no ignition sources such as naked flames, hot surfaces or sparks (e.g. caused by the build-up of static charge) in the transformer's immediate surroundings and that none occur.
- Do not operate any electrical devices (e.g. risk of sparks from impact wrench).
- Only use conductive and grounded hoses, pipes and pump equipment that are approved for flammable liquids.

11.1 Inspection

When inspecting the transformer, at the same time undertake an inspection of the motor-drive unit and control unit. To do so, proceed as follows:

11.1.1 Visual check

Start with the visual check as follows:

- Check whether any external damage or leaks are visible.
- » In the event of visible damage, contact Maschinenfabrik Reinhausen GmbH's Technical Service department.

If a problem occurs with the control unit and you want to contact Maschinenfabrik Reinhausen GmbH, first read out the software version.

11.1.2 Checking the control unit

1. Check remaining life of the energy accumulator [▶Section 11.1.4, Page 121].
   - » If the remaining life is less than 1(%), contact Maschinenfabrik Reinhausen GmbH's Technical Service department.
2. Check the function of the LEDs [▶Section 11.1.5, Page 122].

11.1.3 Read out software version (F6)

To read out the software version, proceed as follows:

✓ The AVR MANUAL operating mode is active.

1. Press MENU > △ until the desired function is displayed.
   » F6
2. Press AVR MANUAL to confirm the selection.
   » The software version of the control unit will be displayed in the "YYMMDD" (year, month, date) format.
3. Press AVR MANUAL to exit the display.
4. Press MENU to leave the parameterization menu.

11.1.4 Reading remaining life (F2)

With the function "Read remaining life", you can request the current status (as a percentage).

> If the remaining life is less than or equal to 1(%), contact the Maschinenfabrik Reinhausen GmbH's Technical Service department.

For functional reasons, the remaining life drops more quickly at the beginning of the product life cycle and the curve becomes flatter as the operating time increases:

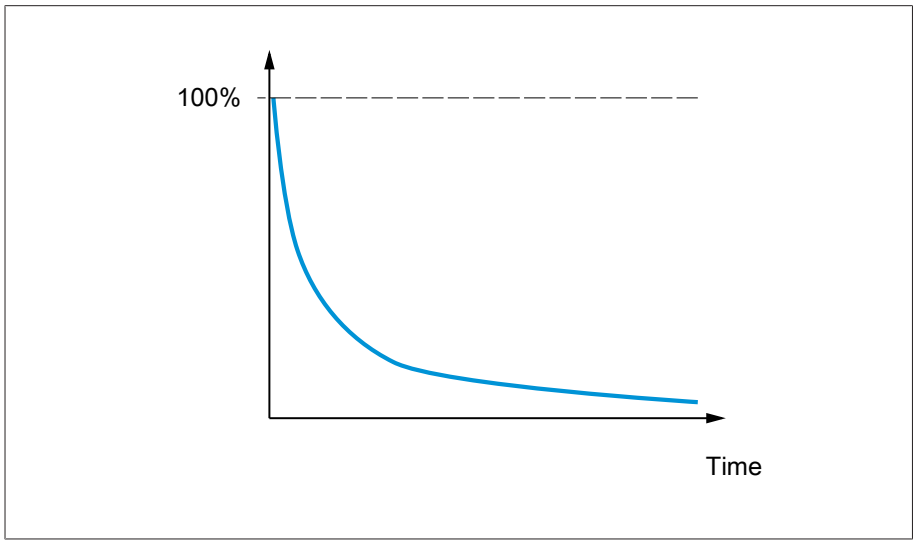

Figure 53: Typical progression of the remaining life

The progression is influenced by external influences – in particular high ambient temperatures – and is subject to certain fluctuations. With regular observation, the progression of the remaining service life can be better estimated. Recommendation:

› Read off and note remaining life annually.

A remaining lifetime of 0% does not necessarily lead to blocking.

The controller monitors the capacity and voltage of the energy accumulator to prevent undefined switching states. As a result, switching commands are only executed if there is sufficient energy to reach the preselected target position even in the event of a voltage failure.

Switching commands are blocked if error message E5.2 (undervoltage) is present during a pre-check.

Event	Necessary action
Remaining life = 1% => no blocking	Contact the Maschinenfabrik Reinhausen GmbH Technical Service. Prepare control unit replacement. Monitor event messages constantly.
Controller detects undercapacity in operation – Error message E5.1 – No blocking	Control unit replacement recommended.
Controller detects undervoltage in operation – Error message E5.2 – No blocking	Control unit replacement recommended.
Pre-check detects voltage drop under load – Error message E5.2 (undervoltage) – Error message E2.4 (energy in energy accumulator too low.) – Tap-change operations blocked	Control unit replacement necessary.

Table 36: Remaining life recommendations for action

To start the remaining life query, proceed as follows:

✓ The AVR MANUAL operating mode is active.

1. Press MENU > △ until the desired function is displayed.
   »
2. Press AVR MANUAL to confirm the selection.
   » The remaining life is displayed as a percentage value.
3. Press AVR MANUAL to exit the display.
4. Press MENU to leave the parameterization menu.

11.1.5 LED function test (F3)

You can use this function to test the function of all LEDs and the display on the front of the control unit. To do so, proceed as follows:

✓ The AVR MANUAL operating mode is active.

1. MENU > Press △ until the desired function is displayed.
   »
2. Press AVR MANUAL to confirm the selection.
   » All display elements on the front of the control unit light up.
3. Press AVR MANUAL to exit the display.
4. Press MENU to leave the parameterization menu.

11.1.6 Checking the temperature blocking

If you operate the on-load tap-changer with alternative insulating fluids, you must check the function of the temperature blocking. To do so, proceed as follows:

✓ Check the function of the temperature sensor in accordance with the manufacturer's details.

✓ The ⚠ LED is not lit; if this is not the case, resolve the cause of the error.

› Remove the plug at terminal X3 to simulate a blocking signal.

» Blocking is active and the LED ⚠ is lit.

11.1.7 Oil quality

1. Check the quality of the transformer oil at regular intervals.
2. Determine dielectric strength and water content at an oil temperature of 20°C ± 5°C.
3. The dielectric strength and water content must comply with the limit values specified in the section "Technical data".

» If these limit values are not complied with, change the oil.

11.2 Maintenance

The ECOTAP® VPD® on-load tap-changer and ECOTAP® VPD® MD&C motor-drive unit are maintenance-free.

Interval	Action
After 500,000 operations	Replacing the on-load tap-changer: Contact the Maschinenfabrik Reinhausen Technical Service department for this.
After a maximum of 20 years	Replace the control unit. Contact the Maschinenfabrik Reinhausen Technical Service department for this.

11.3 Care

You can clean the device's housing with a dry cloth.

12 Messages

12.1 LEDs

LED	State	Meaning
⏻	Off	Voltage supply missing
	Flashing	Inrush interlock active
	Lit	Ready
🔋	Off	Energy accumulator not ready
	Flashing	Energy accumulator is charging
	Lit	Energy accumulator is ready
⟳	Off	Motor stationary
	Lit	Motor running
⚠	Off	Ready
	Lit	Fault

Table 37: Messages via LEDs

12.2 Event messages

Code	Type	Cause	Remedy
E1.1	Info	No connection to EXTERNAL CONTROL	Check that the cable connection between the control unit and EXTERNAL CONTROL is connected correctly. Check that the EXTERNAL CONTROL is working correctly. Follow the corresponding operating instructions when doing so. If the error is still present, contact MR.
E2	Info	EXTERNAL CONTROL command could not be performed.	Check the EXTERNAL CONTROL operating mode setting. Check whether the on-load tap-changer is in a permitted position. To do so, set the operating mode to MANUAL and test manual tap-change operations. After a successful manual tap-change operation in EXTERNAL CONTROL operating mode, test the remote control. If the error is still present, contact MR.
E2.1	Info	Highest or lowest permitted operating position reached.	Check regulating range settings.
E2.2	Info	Tap-change operation has not been completed or motor-drive unit error	If the error is still present after the next tap-change command, contact MR.
E2.3	Info	Inrush interlock is active or automatic adjustment required.	Wait for inrush interlock. If error is still present, carry out automatic adjustment.

Code	Type	Cause	Remedy
E2.4	Info	Energy in the energy accumulator is too low.	Adjust the voltage supply to the specification. Check the remaining life of the energy accumulator (F2).
E2.5	Info	Signal for blocking the automatic voltage regulation active.	Check signal source.
E2.6	Info	Connection error to OLTC	Check that the connection cable is plugged in correctly.
E3.1 E3.2 E3.3 E3.4	Warning	Error in connection between the control unit and the motor-drive unit	Check that all plug connections on the control unit are tight and correct. Check whether the connection cable is free of damage. Has the factory-set wiring on X2 or X4 been changed? If yes, restore to original status. If the error is still present, contact MR.
E4.1	Error	Adjustment not carried out or incorrect.	Carry out automatic adjustment (again).
E4.2	Error	The desired target position could not be reached when voltage failed.	Check the correct setting of the "Target position for loss of voltage" function (P6). The target position must be within the regulating range. Check the remaining life of the energy accumulator (F2). If the error is still present, contact MR.
E5.1 E5.2 E5.3	Warning	System not ready	Check operational readiness: ⏻ LED (voltage supply) and 🔋 LED (energy accumulator) must light up continuously. Adjust the voltage supply to the specification. Check the remaining life of the energy accumulator (F2). If the error is still present, contact MR.
E6.1 E6.2 E6.3	Error	Tap-change operation command cannot be performed	Contact MR.
E7.1 E7.2	Error	Correct positioning not possible	Has the factory-set wiring on X2 or X4 been changed? If yes, restore to original status. Carry out automatic adjustment. If the error is still present, contact MR.

Table 38: Event codes

13 Overview of parameters

Parameter overview without function DS

You can use function F8 to reset the device to the factory settings:
"●" = Reset to factory settings
"-" = Customer settings retained.

Parameter	Setting range	Factory settings	Current settings	Reset via F8
P1: Desired voltage	100...240 V	230 V		●
P2: Normal regulation				
P2.1: Bandwidth B1	0.5...8 %	2 %		●
P2.2: Delay time T1	3...1800 s	10 s		●
P3: Fast regulation				
P3.1: Bandwidth B2	3...9%; off[1)]	4 %		●
P3.2: Delay time T2	2 s...(T1 - 1 s / 5 s)[2)]	2 s		●
P4: Voltage blocking				
P4.1: Undervoltage blocking	85...263 V	85 V		●
P4.2: Overvoltage blocking	86...264 V	264 V		●
P4.3: Activate/deactivate voltage blocking	0 = inactive 1 = active	0		●
P5: Blocking function	0 = inactive 1 = active AUTO/EXTERNAL 2 = active MANUAL/AUTO/EXTERNAL	0		-
P6: Target position for loss of voltage				
P6.1: Set target position	1...9 (17)	1		-
P6.2 Activate/deactivate function	0 = inactive, 1 = active	0		-
P7: Number of operating positions	9 or 17	9		-
P8: Regulating range				
P8.1: Lowest operating position	1...9 (17)[3)]	1		-
P8.2: Highest operating position	1...9 (17)[3)]	9		-
P9: Remote behavior	0 = local, 1 = remote	1		-
P10: Password protection				
P10.1: Set password	0...255	0		-
P10.2: Activate/deactivate password protection	0 = inactive, 1 = active	0		-
P12: Behavior in case of failure of communication				
P12.1: Activate behavior in case of failure of communication	0 = inactive, 1 = active	0		-
P12.2: Waiting period T3 in case of failure of communication	1...1800 s	30 s		-

Parameter	Setting range	Factory settings	Current settings	Reset via F8
P12.3: Select operating mode after failure	1 = AVR AUTO 3 = EXTERNAL CONTROL	1		-
P12.4: Activate behavior when communication is restored	0 = inactive, 1 = active	0		-
P12.5: Waiting period T4 when communication is restored	1...1800 s	30 s		-
P12.6: Select operating mode on restart	1 = AVR AUTO 3 = EXTERNAL CONTROL	3		-
P20: Modbus RTU parameters				
P20.1: Modbus address (HR 31508)	1...247	See "Device parameters upon delivery" [▶Section 9.1, Page 101]		-
P20.2: Baud rate (HR 31506 and HR 31507)	9600, 19200, 38400, 57600			-
P20.3: Restart communication	0 = inactive, 1 = active	0		-
P20.4: E1.1 at AVR AUTO				
Material No. 10169147XX	0 = inactive, 1 = active	0		-
Material No. 10169148XX		1		-
F1: Automatic/manual adjustment				
F1.1: Automatic adjustment	-	-		-
F1.2: Manual adjustment n-1	-	-		-
F1.3: Manual adjustment n+1	-	-		-
F2: Remaining life of the energy accumulator	-	-		-
F3: LED function test	-	-		-
F4: Software update	-	-		-
F5: Invert travel commands	0 = inactive, 1 = active	0		-
F6: Read out software version	-	-		-
F7: Error relay				
F7.1: Error relay E1.1	0 = inactive, 1 = active	1		-
F7.2: Error relay E2	0 = inactive, 1 = active	1		-
F8: Factory settings	-	-		-
F9: Display control parameters	-	-		-

Table 39: Parameter overview

[1] The bandwidth B2 is always at least 0.5% greater than the bandwidth B1.

[2] The delay time T2 is always at least 1 s less than T1 (if T1 ≤ 10 s) or 5 s less than T1 (if T1 > 10 s).

[3] Depending on the number of tap positions of the on-load tap-changer.

Parameter overview for optional function DS

The parameters can be configured as absolute values or relative values.

The following applies for the relative values:

- P_0, P_{min}, P_{max}: The parameters for the active power (in kW) relate to the value of the rated power of the transformer (in kVA).
- U_{min}, U_{max}: The parameters for the voltage limits relate to the set voltage U_{ref}.

Parameter	Setting range	Factory settings	Current settings	Reset via F8
P11.1: DS function on/off	0 = off 1 = on	1		•
P11.2: Transformer nominal power $S_{r(Tr)}$	1...32760 kVA	400		•
P11.3: Desired value U_0 (absolute) for active power P_0	85...264 V	230		•
P11.4: Value representation selection U_{min} (P11.5)	0 = absolute, 1 = relative	0		•
P11.5: Minimum desired value U_{min}	85...264 V	220		•
P11.6: Value representation selection U_{max} (P11.7)	0 = absolute, 1 = relative	0		•
P11.7: Maximum desired value U_{max}	85...264 V	240		•
P11.8: Value representation selection P_0 (P11.9)	0 = absolute, 1 = relative	1		•
P11.9: Active power P_0 at desired value U_0	-81.9 %...81.9 %	0		•
P11.10: Value representation selection P_{min} (P11.11)	0 = absolute, 1 = relative	1		•
P11.11: Active power P_{min} at minimum desired value U_{min}	-81.9 %...81.9 %	-50		•
P11.12: Value representation selection P_{max} (P11.13)	0 = absolute, 1 = relative	1		•
P11.13: Active power P_{max} at maximum desired value U_{max}	-81.9 %...81.9 %	50		•
P11.14: Current transformer transmission ratio	1...65000 (6500.0)	100		•
F10.1: Display 3-phase values of the DS function	0 = inactive, 1 = active	0		-
F10.2: Display 1-phase values of the DS function	0 = inactive, 1 = active	0		-
F10.3: Extend rolling display	0 = standard, 1 = plus F10.1 2 = plus F10.2	0		-

Table 40: Parameters for optional function DS

14 Disposal

For disposal, observe the national requirements applicable in the country of use.

If you have any questions about disassembly and disposal, please contact Maschinenfabrik Reinhausen GmbH's Technical Service department.

15 Technical data

15.1 On-load tap-changer type designation

The designation of a particular on-load tap-changer model depends on various features, hence ensuring an unmistakable and non-interchangeable on-load tap-changer designation.

15.1.1 ECOTAP® VPD on-load tap-changer designation

Type designation	ECOTAP® VPD III 30 D – 24 – 09 09 0
ECOTAP® VPD	On-load tap-changer type
III	Number of phases
30	Maximum rated through-current I_{rm} [A]
D	Application: Delta
24	Highest voltage for equipment U_m [kV]
09 09 0	Basic connection

Table 41: Designation of the ECOTAP® VPD® on-load tap-changer

15.1.2 Number of positions and basic connection

The selector must adapt to the number of positions and tapped winding circuit.

Designation of basic connection	09 09 0
09	Contact circle pitch of selector
09	Maximum number of operating positions
0	Number of mid-positions

Table 42: Designation of basic connection

15.2 Technical data for the on-load tap-changer

Type ECOTAP® ...	VPD® III 30
Number of phases	3
Application	At any point in the winding
Permitted transformer types	Free breathing with oil conservator
	Entirely oil-filled hermetically sealed transformers (without gas cushion)
Maximum rated through-current	30 A
Rated short-time current	750 A
Rated duration of short-circuits	2 s
Rated peak withstand current	1,875 A
– Maximum rated step voltage	550 V
– Step capacity	16,500 VA
Maximum number of operating positions	9
Rated insulation level:	
– Highest voltage for equipment Um	24 kV
– Rated withstand voltages	See section "Permitted voltage stresses"
Rated frequency	50 Hz, 60 Hz
Permissible temperature range of transformer oil for on-load tap-change operations:	
– Mineral insulating oil (IEC 60296)	-25°C...+105°C (up to +115°C when the transformer is in emergency operation)
– Synthetic ester fluid (IEC 61099)	-10°C to +115°C
– Natural ester fluid (IEC 62770)	-10°C to +115°C
– Natural esters MIDEL eN1204	-15°C to +115°C
Permissible absolute pressure during operation	0.7...1.4 bar
Vacuum-drying	Vacuum proof
Maximum number of tap-change operations	500,000
Resistance to corrosion	C4H

Table 43: ECOTAP® VPD® III technical data

15.3 Step capacity diagram

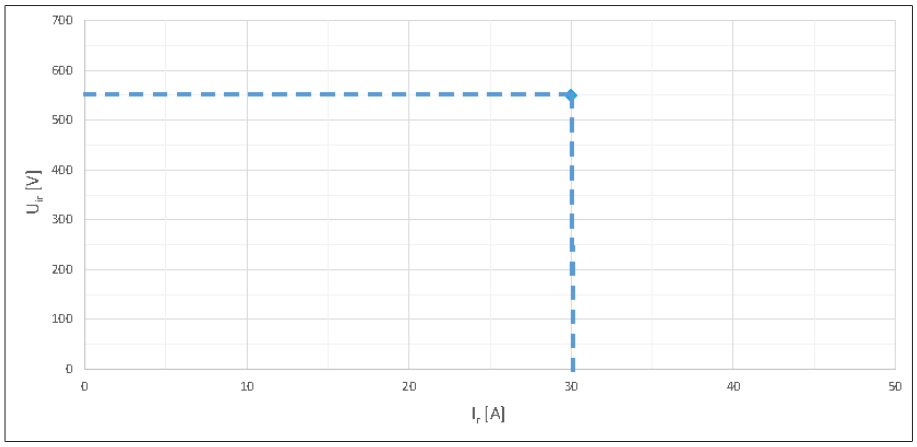

Figure 54: Step capacity diagram for ECOTAP® VPD®

15.4 Permitted voltage stresses

This section describes the permitted voltage stresses on the tap winding and on-load tap-changer.

When selecting the on-load tap-changer, you must check that the highest stresses on the selector do not exceed the related rated withstand voltages.

Definition of insulation distances	
a	Between the beginning and the end of a tap winding and, for a coarse winding version, between the beginning and the end of the coarse winding. Information for coarse tap selector connection in the (-) position of the change-over selector: When stressed with impulse voltage, the permissible withstand voltage "a" between the end of a coarse winding connected with the K tap selector contact and the tap selector contact at the end of the tap winding of the same phase must be adhered to.
a1	Between tap selector contacts of the winding of one tap position (connected or not connected)
2a1	Between the tap selector contacts of the winding across two tap positions (connected or not connected)
b	Between the tap selector contacts of different phases and between change-over selector contacts of different phases which are connected with the beginning/end of a tap winding or with a tap selector contact. The permissible voltages between the contacts for tap-changers for delta connections depend on the positions of the change-over selector and tap selector. The different permissible withstand voltages b1, b2 or b3 must therefore be noted for an insulation distance:
b1	Between selected contacts for different phases
b2	From the selected contact of one phase to non-selected contacts of other phases
f	Between tap selector contacts and (+) change-over selector contacts to ground. Different values apply for the delta connection version:
f1	Between take-off lead and ground and in (+) position of change-over selector between (+) change-over selector contacts and ground
f2	Between non-selected tap selector contacts and in (-) position of change-over selector between (+) contacts and ground.

Table 44: Definition of insulation distances

Insulation distances for an ECOTAP® VPD® III without change-over selector

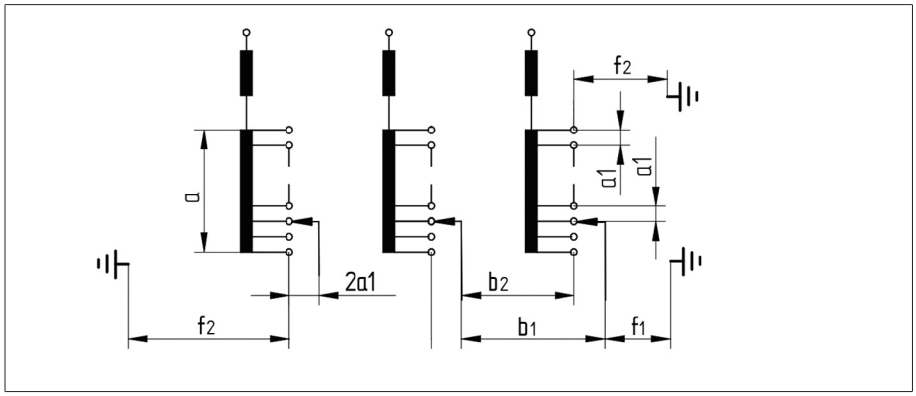

Figure 55: ECOTAP® VPD III without change-over selector

Abbreviations for the rated insulation level:

Abbreviations for the rated insulation level:	
LI	Full wave lightning impulse (kV, 1.2/50 µs)
LIC	Chopped wave lightning impulse (kV, 1.2/50/3 µs)
AC	Applied voltage (kV, 50 Hz, 1 min)

Table 45: Abbreviations for the rated insulation level:

Rated insulation level (voltage magnitudes for delta applications in kV)

		Highest voltage for equipment:
		U_m = 24 kV
Insulation distance	Voltage waveform	Without change-over selector
a	LI 1.2/50 µs	50
	LIC 1.2/50/3...6 µs	55
	AC 50 Hz, 1 min	12
a1	LI 1.2/50 µs	15
	LIC 1.2/50/3...6 µs	16.5
	AC 50 Hz, 1 min	4
b1	LI 1.2/50 µs	150
	LIC 1.2/50/3...6 µs	165
	AC 50 Hz, 1 min	50
b2	LI 1.2/50 µs	170
	LIC 1.2/50/3...6 µs	190
	AC 50 Hz, 1 min	60
f1	LI 1.2/50 µs	150
	LIC 1.2/50/3...6 µs	165
	AC 50 Hz, 1 min	50
f2	LI 1.2/50 µs	170
	LIC 1.2/50/3...6 µs	190
	AC 50 Hz, 1 min	60

Table 46: Rated insulation level (voltage magnitudes for delta applications in kV)

15.5 Limit values for dielectric strength and water content of insulating fluids

Limit values for insulating fluids in accordance with IEC 60296	U_d	H_2O
When commissioning the transformer for the first time	> 60 kV/2.5 mm	< 12 ppm
During operation	> 30 kV/2.5 mm	< 30 ppm
After maintenance	> 50 kV/2.5 mm	< 15 ppm

Table 47: Limit values for insulating fluids in accordance with IEC 60296, dielectric strength measured in accordance with IEC 60156, water content measured in accordance with IEC 60814

Limit values for natural esters in accordance with IEC 62770	U_d	H_2O
When commissioning the transformer for the first time	> 60 kV/2.5 mm	≤ 100 ppm
During operation	> 30 kV/2.5 mm	≤ 200 ppm
After maintenance	> 50 kV/2.5 mm	≤ 100 ppm

Table 48: Limit values for natural esters in accordance with IEC 62770, dielectric strength measured in accordance with IEC 60156, water content measured in accordance with IEC 60814

Limit values for synthetic esters in accordance with IEC 61099	U_d	H_2O
When commissioning the transformer for the first time	> 60 kV/2.5 mm	≤ 100 ppm
During operation	> 30 kV/2.5 mm	≤ 400 ppm
After maintenance	> 50 kV/2.5 mm	≤ 150 ppm

Table 49: Limit values for synthetic esters in accordance with IEC 61099, dielectric strength measured in accordance with IEC 60156, water content measured in accordance with IEC 60814

15.6 Control unit without option DS

Electrical data of the control unit without option DS	
Permissible nominal voltage range Note: The measured voltage is the supply voltage	U_N: 100...240 VAC – 15%/10% Measuring accuracy at U_N = 100 V (-25...+50 °C): < ± 2.00% Measuring accuracy at U_N = 240 V (-25...+50 °C): < ± 0.85% Intrinsic consumption: 7.5 W
Permissible frequency range	50/60 Hz
Overvoltage category	IV (in accordance with DIN 60664-1)
Input current	Max. 1.5 A at 100 V AC Max. 0.63 A at 240 V AC
Power consumption	Max. 150 W
Internal fuse (F1)	Fine-wire fuse, 6.3 x 32 mm, min. 250 V, T4A
Nominal voltage of the control circuit	24 V DC
Nominal current of the control circuit	5 A
Duration of the tap-change operation	Approx. 420 ms

Table 50: Electrical data of the control unit

Permissible ambient conditions of the control unit without option DS	
Operating temperature	-25...+50 °C (continuous) -25...+70 °C (max. 2 h per day)
Storage temperature	-25...+50 °C
Relative humidity	10...95% non-condensing
Air pressure	Corresponds to 2,000 m above sea level
Degree of protection	IP30 as long as all interfaces X1...X8 are fitted with the plugs intended. With control cabinet: See dimensional drawing
Pollution level	2
Installation site	With/without standard control cabinet: Indoors Optional: Control cabinet for outdoor use The control cabinet must be protected against direct sunlight.

Table 51: Permissible ambient conditions

Interfaces

Interface X5	Terminal	Description
Customer messages	1, 2	*STATUS OK*
	3, 4	*ERROR*

Table 52: X5/customer messages

Switching capacity X5 contacts	U_N	I_N
AC	125 V	0.5 A
DC	30 V	1.0 A
DC	60 V	0.3 A

Table 53: X5/switching capacity

Interface X6/COM1 (RS485)	Terminal	Description
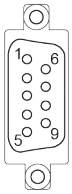	5	GND
	6	A (+)
	9	B (-)

Table 54: X6/COM1 (RS485)

Terminating resistor for X6/COM1

Switch S1 for terminating resistor	Position	Description
	0	Without terminating resistor
	1	With terminating resistor 120 Ω

Table 55: Switch S1

Control unit	Delivery status
Material No. 10169147XX	Terminating resistor 120 Ω activated
Material No. 10169148XX	Terminating resistor deactivated

Table 56: Device versions (terminating resistor)

15.7 Control unit with option DS

Electrical data of the control unit with option DS	
Permissible nominal voltage range Note: The measured voltage is the supply voltage	U_N: 100...240 VAC – 15%/10% Measuring accuracy at U_N (-25...+50 °C): < ± 0.3% Intrinsic consumption: 7.5 W
Current measurement	I_N: 5 A Measuring range: 0.01...2.1 * I_N Overload capacity: 12.5 A (continuous), 500 A (for 1 s) Measurement accuracy at I_N (-25...+50 °C): < ± 0.5% Intrinsic consumption: < 1 VA Measurement category IV in accordance with IEC 61010-2-30
Permissible frequency range	50/60 Hz
Overvoltage category	IV (in accordance with DIN 60664-1)
Input current	Max. 1.5 A at 100 V AC Max. 0.63 A at 240 V AC
Power consumption	Max. 150 W
Internal fuse (F1)	Fine-wire fuse, 6.3 x 32 mm, min. 250 V, T4A
Nominal voltage of the control circuit	24 V DC
Nominal current of the control circuit	5 A
Duration of the tap-change operation	Approx. 420 ms

Table 57: Electrical data of the control unit

Permissible ambient conditions of the control unit with option DS	
Operating temperature	-25...+50 °C (continuous) -25...+70 °C (max. 2 h per day)
Storage temperature	-25...+50 °C
Relative humidity	10...95% non-condensing
Air pressure	Corresponds to 2,000 m above sea level
Degree of protection	IP30 as long as all interfaces X1...X8 are fitted with the plugs intended. With control cabinet: See dimensional drawing
Pollution level	2
Installation site	Interior

Table 58: Permissible ambient conditions

Interfaces

Interface X5	Terminal	Description
Customer messages	1, 2	*STATUS OK*
	3, 4	*ERROR*

Table 59: X5/customer messages

Switching capacity X5 contacts	U_N	I_N
AC	125 V	0.5 A
DC	30 V	1.0 A
DC	60 V	0.3 A

Table 60: X5/switching capacity

Interface X6/COM1 (RS485)	Terminal	Description
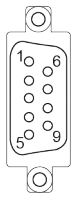	5	GND
	6	A (+)
	9	B (-)

Table 61: X6/COM1 (RS485)

Interface X7 (current-transformer connection) for 1-phase current measurement	Terminal	Description
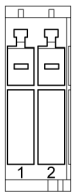	1	k-S1
	2	l-S2

Table 62: X7

Interface X7 (current-transformer connection)	Connector	Description
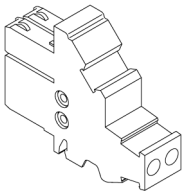	Terminal for X7.1	k-S1
	Terminal for X7.2	l-S2
	An automatic short-circuit function is integrated into the connector.	

Table 63: Connector for X7

Terminating resistor for X6/COM1

Switch S1 for terminating resistor	Position	Description
	0	Without terminating resistor
	1 (factory setting)	With terminating resistor 120 Ω

Table 64: Switch S1

Control unit	Delivery status
Material No. 10161997XX	Terminating resistor 120 Ω activated

Table 65: Device versions (terminating resistor)

15.8 Technical data for the motor-drive unit

Permissible ambient conditions of the motor-drive unit	
Operating temperature	-25 °C...+55 °C
Storage temperature	-25 °C...+55 °C
Air pressure	Corresponds to 2,000 m above sea level
Degree of protection	IP66
Installation site	Indoors, outdoors

Table 66: Permissible ambient conditions motor-drive unit

Connection cables from the motor-drive unit to the control unit	
Length	10 m (9.7 m available length + 0.3 m internal wiring, motor cover)
External diameter	10.7 +/- 0.3 mm
Connections	Pre-assembled
Operating temperature	-25 °C...+70 °C
Storage temperature	-25 °C...+85 °C

Table 67: Connection cables from the motor-drive unit to the control unit

16 Drawings

16.1 Information on the drawings in the appendix

> The drawings listed in this section are examples. The delivered product may deviate from these examples.
> The drawings that you receive with the order confirmation are definitive.

16.2 Dimensional drawings

MASCHINENFABRIK REINHAUSEN GMBH COPYRIGHT RESERVED
THE REPRODUCTION, DISTRIBUTION AND UTILIZATION OF THIS DOCUMENT AS WELL AS THE COMMUNICATION OF ITS CONTENTS TO OTHERS WITHOUT EXPRESS AUTHORIZATION IS PROHIBITED. OFFENDERS WILL BE HELD LIABLE FOR THE PAYMENT OF DAMAGES. ALL RIGHTS RESERVED IN THE EVENT OF THE GRANT OF A PATENT, UTILITY MODEL OR DESIGN.

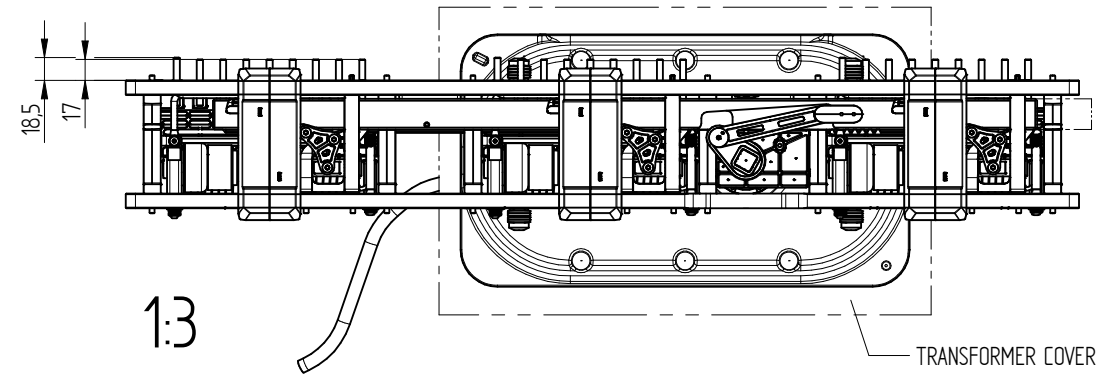

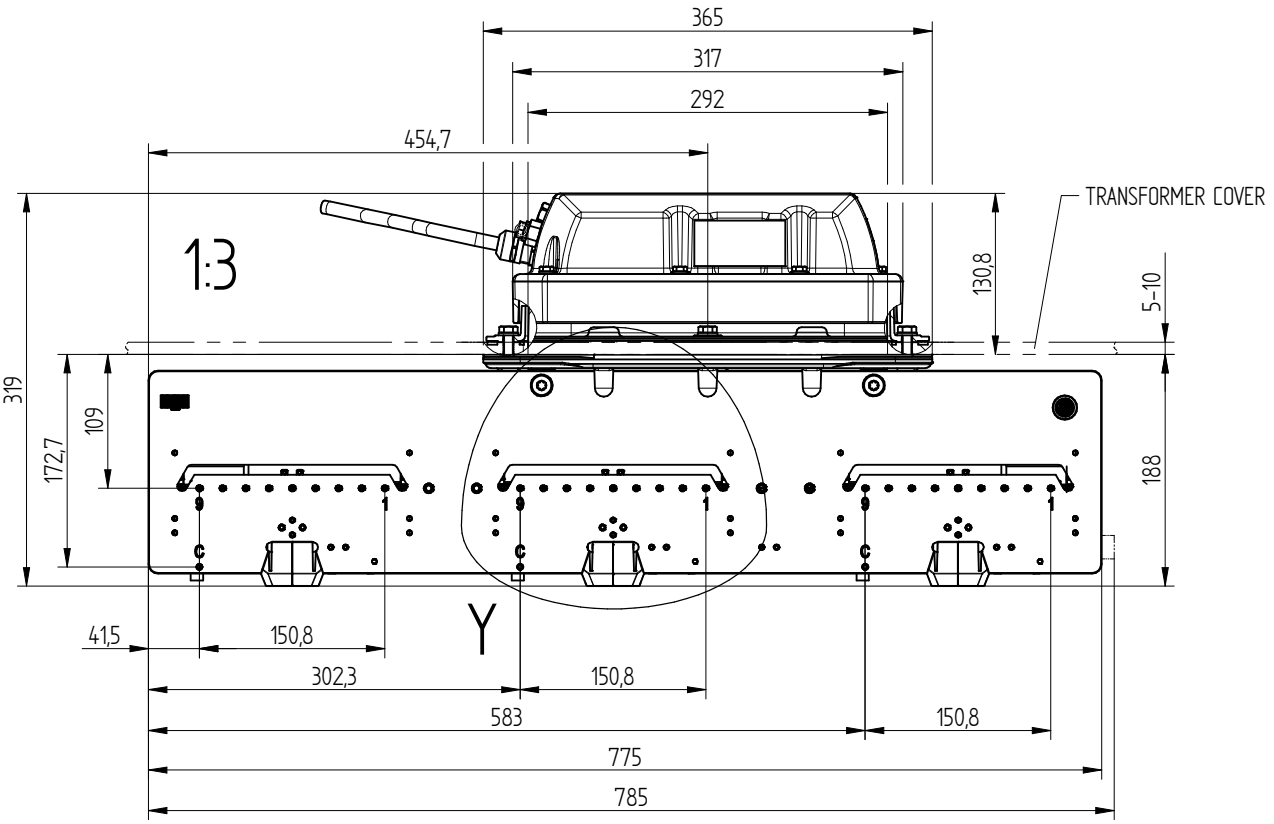

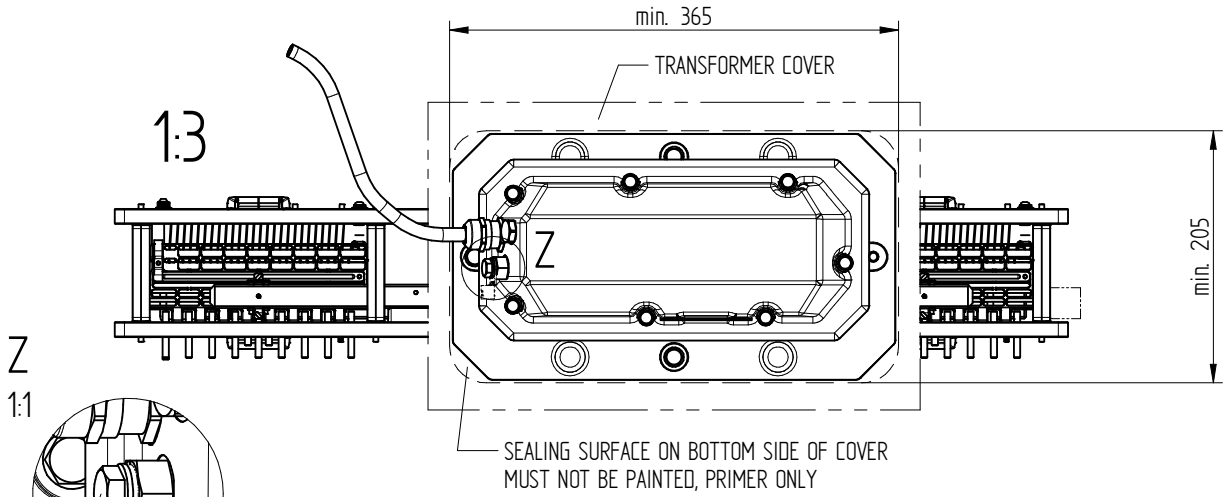

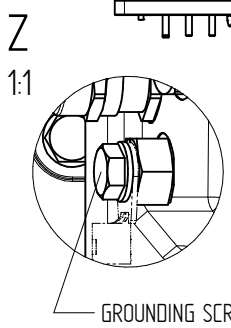

WEIGHT: APPROX. 17,0 kg
DISPLACEMENT VOLUME: APPROX. 5,0 dm³

	DATE	NAME	DOCUMENT NO.	
DFTR.	16.11.2022	JANKERM	SED 8017361 001 01	
CHKD.	16.11.2022	KOTZ	CHANGE NO.	SCALE
STAND.	16.11.2022	KLEYN	1118608	1:2

DIMENSION IN mm EXCEPT AS NOTED

ON-LOAD TAP-CHANGER ECOTAP® VPD®
24 KV, AS SHOWN FOR 9 OPERATING POSITIONS
DIMENSION DRAWING

SERIAL NUMBER
–

MATERIAL NUMBER
101573241E

SHEET
1/3

MASCHINENFABRIK REINHAUSEN GMBH COPYRIGHT RESERVED
THE REPRODUCTION, DISTRIBUTION AND UTILIZATION OF THIS DOCUMENT AS WELL AS THE COMMUNICATION OF ITS CONTENTS TO OTHERS WITHOUT EXPRESS AUTHORIZATION IS PROHIBITED. OFFENDERS WILL BE HELD LIABLE FOR THE PAYMENT OF DAMAGES. ALL RIGHTS RESERVED IN THE EVENT OF THE GRANT OF A PATENT, UTILITY MODEL OR DESIGN.

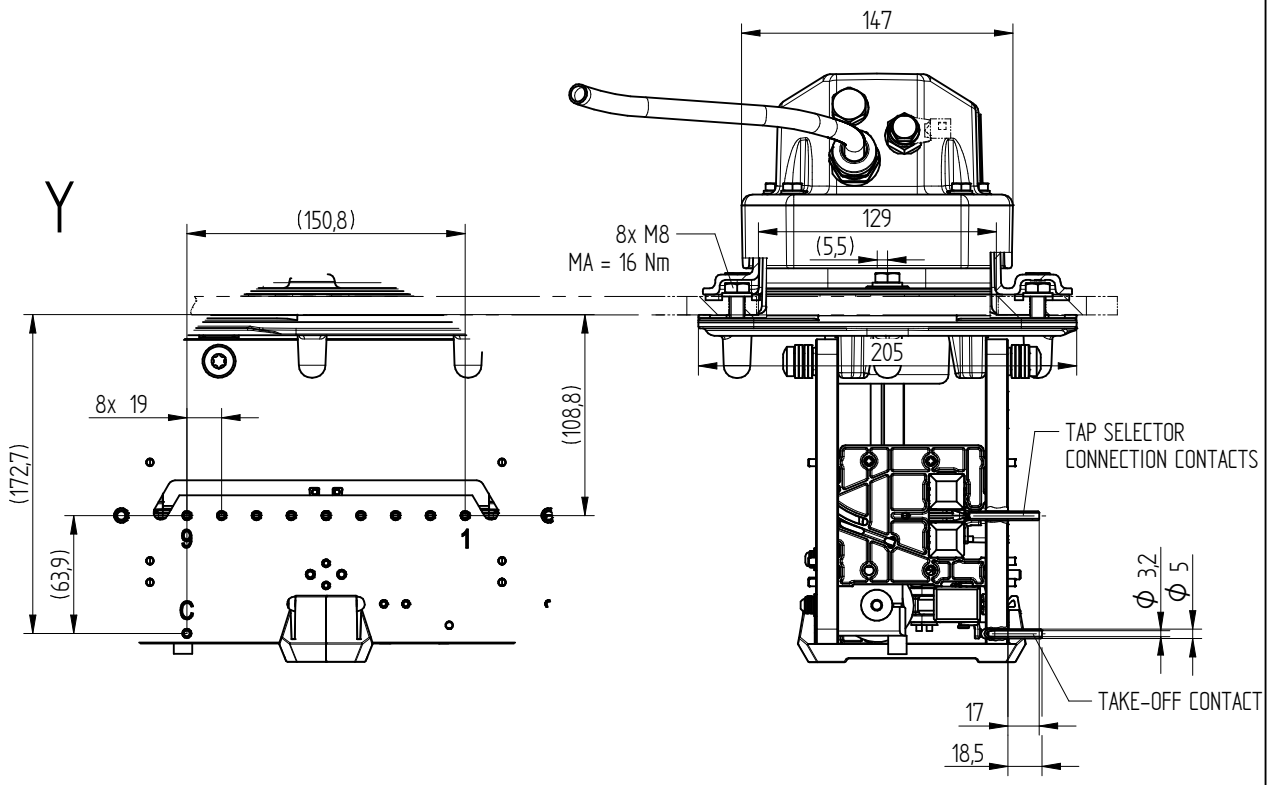

DRILLING TEMPLATE: TRANSFORMER COVER
PROVIDED BY CUSTOMER (TOP VIEW)

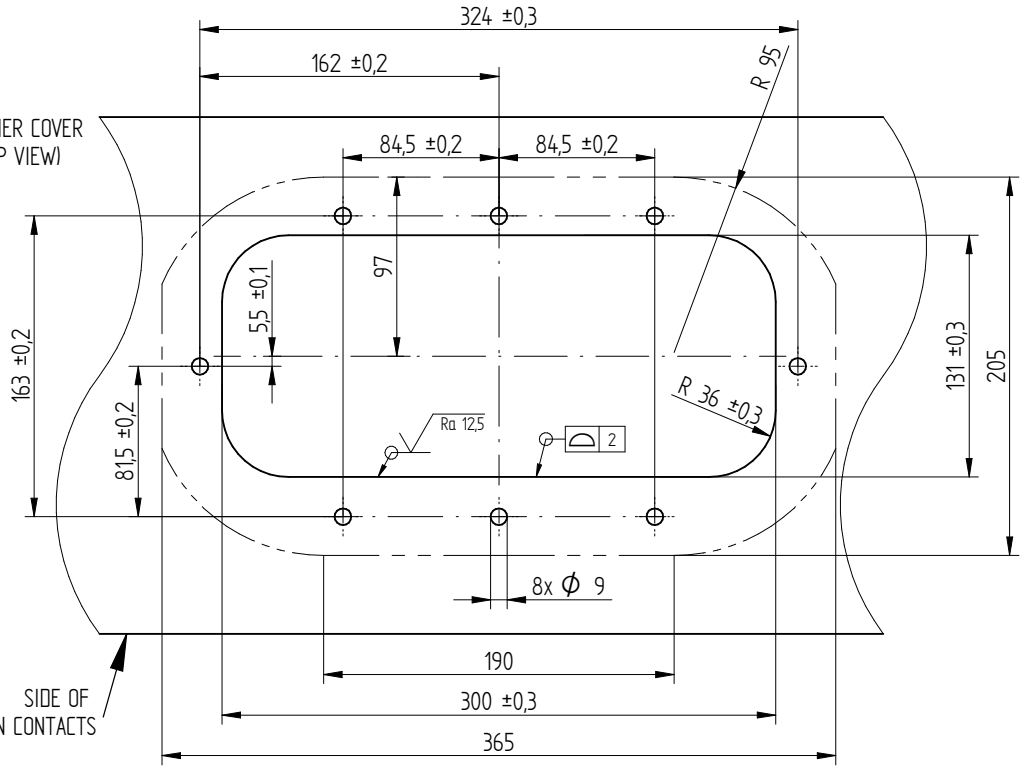

	DATE	NAME	DOCUMENT NO.	
DFTR.	16.11.2022	JANKERM	SED 8017361 001 01	
CHKD.	16.11.2022	KOTZ	CHANGE NO.	SCALE
STAND.	16.11.2022	KLEYN	1118608	1:2

DIMENSION IN mm EXCEPT AS NOTED

ON-LOAD TAP-CHANGER ECOTAP® VPD®
24 KV, AS SHOWN FOR 9 OPERATING POSITIONS
DIMENSION DRAWING

SERIAL NUMBER
–

MATERIAL NUMBER
101573241E

SHEET
2/3

MASCHINENFABRIK REINHAUSEN GMBH COPYRIGHT RESERVED
THE REPRODUCTION, DISTRIBUTION AND UTILIZATION OF THIS DOCUMENT AS WELL AS THE COMMUNICATION OF ITS CONTENTS TO OTHERS WITHOUT EXPRESS AUTHORIZATION IS PROHIBITED. OFFENDERS WILL BE HELD LIABLE FOR THE PAYMENT OF DAMAGES. ALL RIGHTS RESERVED IN THE EVENT OF THE GRANT OF A PATENT, UTILITY MODEL OR DESIGN.

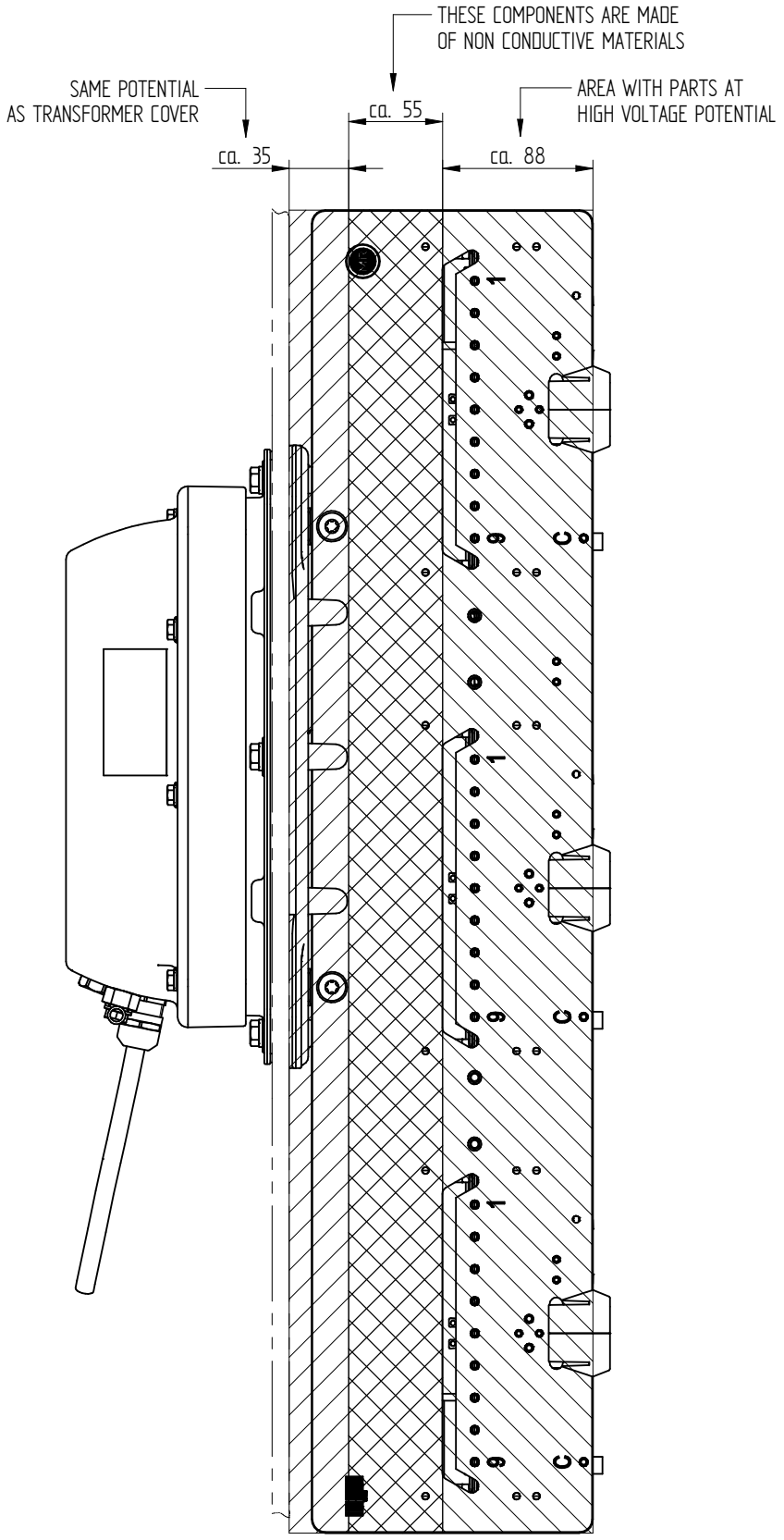

	DATE	NAME	DOCUMENT NO.	
DFTR.	16.11.2022	JANKERM	SED 8017361 001 01	
CHKD.	16.11.2022	KOTZ	CHANGE NO.	SCALE
STAND.	16.11.2022	KLEYN	1118608	1:2

DIMENSION IN mm EXCEPT AS NOTED

ON-LOAD TAP-CHANGER ECOTAP® VPD®
24 KV, AS SHOWN FOR 9 OPERATING POSITIONS
DIMENSION DRAWING

SERIAL NUMBER
–

MATERIAL NUMBER
101573241E

SHEET
3/3

16.3 High-voltage connection diagrams

MR VERBINDUNGEN
MR CONNECTIONS
KUNDEN VERBINDUNGEN
CUSTOMER CONNECTIONS

TS_1_U	WÄHLER_U TAP SELECTOR_U
TS_2_V	WÄHLER_V TAP SELECTOR_V
TS_3_W	WÄHLER_W TAP SELECTOR_W
TW_0_U	TRAFOWICKLUNG_U TRANSFORMER WINDING_U
TW_1_U	STUFENWICKLUNG_U TAP WINDING_U
V	ANSCHLUSS TRAFO CONNECTION TRANSFORMER
W	ANSCHLUSS TRAFO CONNECTION TRANSFORMER
U	ANSCHLUSS TRAFO CONNECTION TRANSFORMER

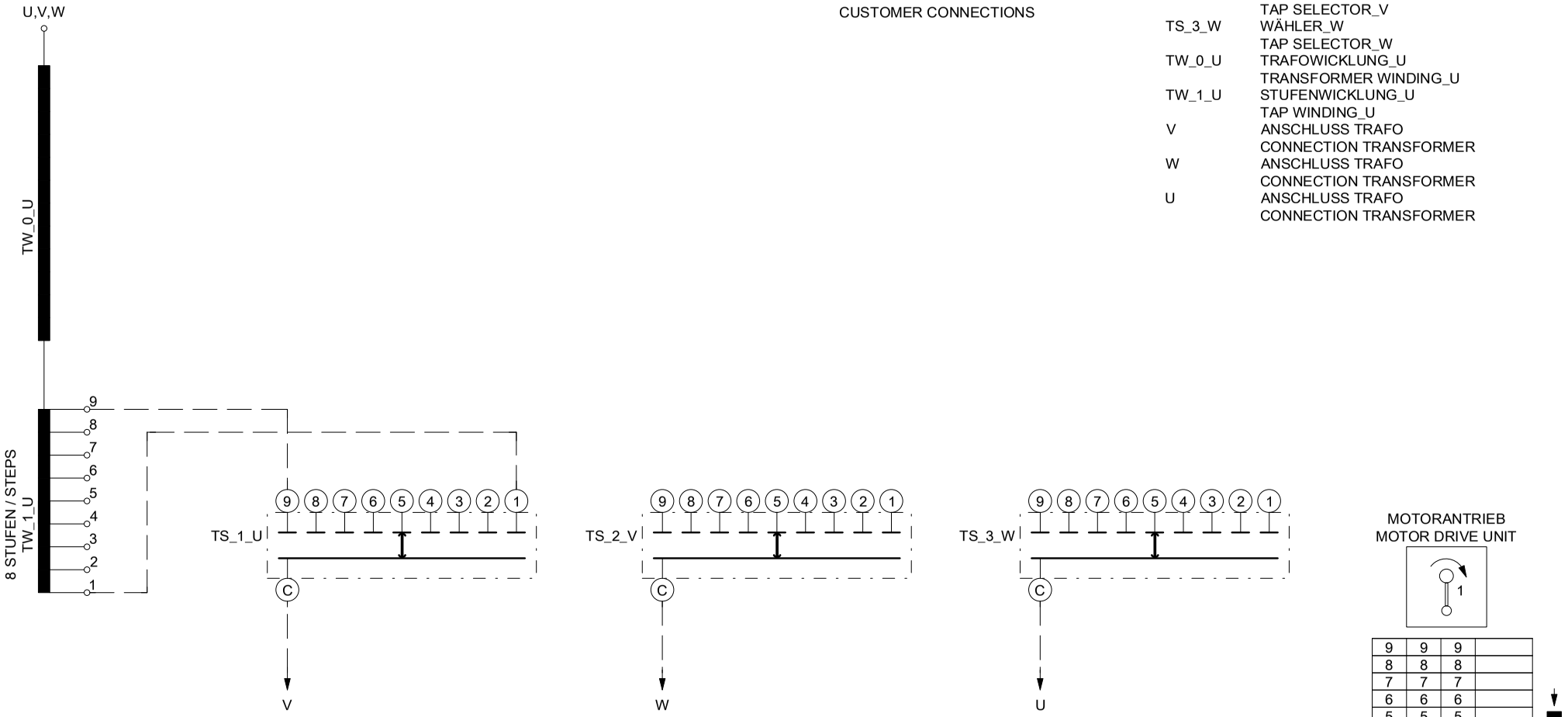

ANSICHT VON DER TRANSFORMATOR SEITE
VIEW FROM TRANSFORMER SIDE

BETRIEBSSTELLUNG SERVICE POSITION	9	9 9 9
BEZEICHNUNG DER WÄHLERKONTAKTE DESIGNATION OF TAP SELECTOR CONTACTS		8 8 8 7 7 7 6 6 6 5 5 5 4 4 4 3 3 3 2 2 2 1 1 1
BEZEICHNUNG DER STELLUNGEN DESIGNATION OF POSITIONS		
REGELBEREICH (kV) REGULATION RANGE (kV)		

BETRIEBSSTELLUNGEN SERVICE POSITIONS	9
VERSCHIEDENE SPANNUNGEN DIFFERENT VOLTAGES	9
JUSTIERSTELLUNG ADJUSTMENT POSITION ■	5

Fuer diese technische Unterlage behalten wir uns gemaess DIN 34 Abschnitt 2.1 und 2.2 alle Rechte vor.

DRAWING BY CAD
DO NOT MODIFY MANUALLY

NO.	MODIFICATION	DATE	NAME
		DATE	09.07.2021
		EXEC.	KONFIG
		VERIFIED	SO
		STANDARD	

ORIGIN. REPL. REPL.BY

SCHALTBILD
CONNECTION DIAGRAM

LASTSTUFENSCHALTER
ON-LOAD TAP-CHANGER

ECOTAP®VPD III 30D-24-09 09 0

LANGUAGE: DE EN

PROJECT: 8049432_01

SHEET 1
1 SH.

MR VERBINDUNGEN
MR CONNECTIONS
KUNDEN VERBINDUNGEN
CUSTOMER CONNECTIONS

TS_1_U	WÄHLER_U TAP SELECTOR_U
TS_2_V	WÄHLER_V TAP SELECTOR_V
TS_3_W	WÄHLER_W TAP SELECTOR_W
TW_0_U	TRAFOWICKLUNG_U TRANSFORMER WINDING_U
TW_1_U	STUFENWICKLUNG_U TAP WINDING_U
TW_2_U	TRAFOWICKLUNG_U TRANSFORMER WINDING_U

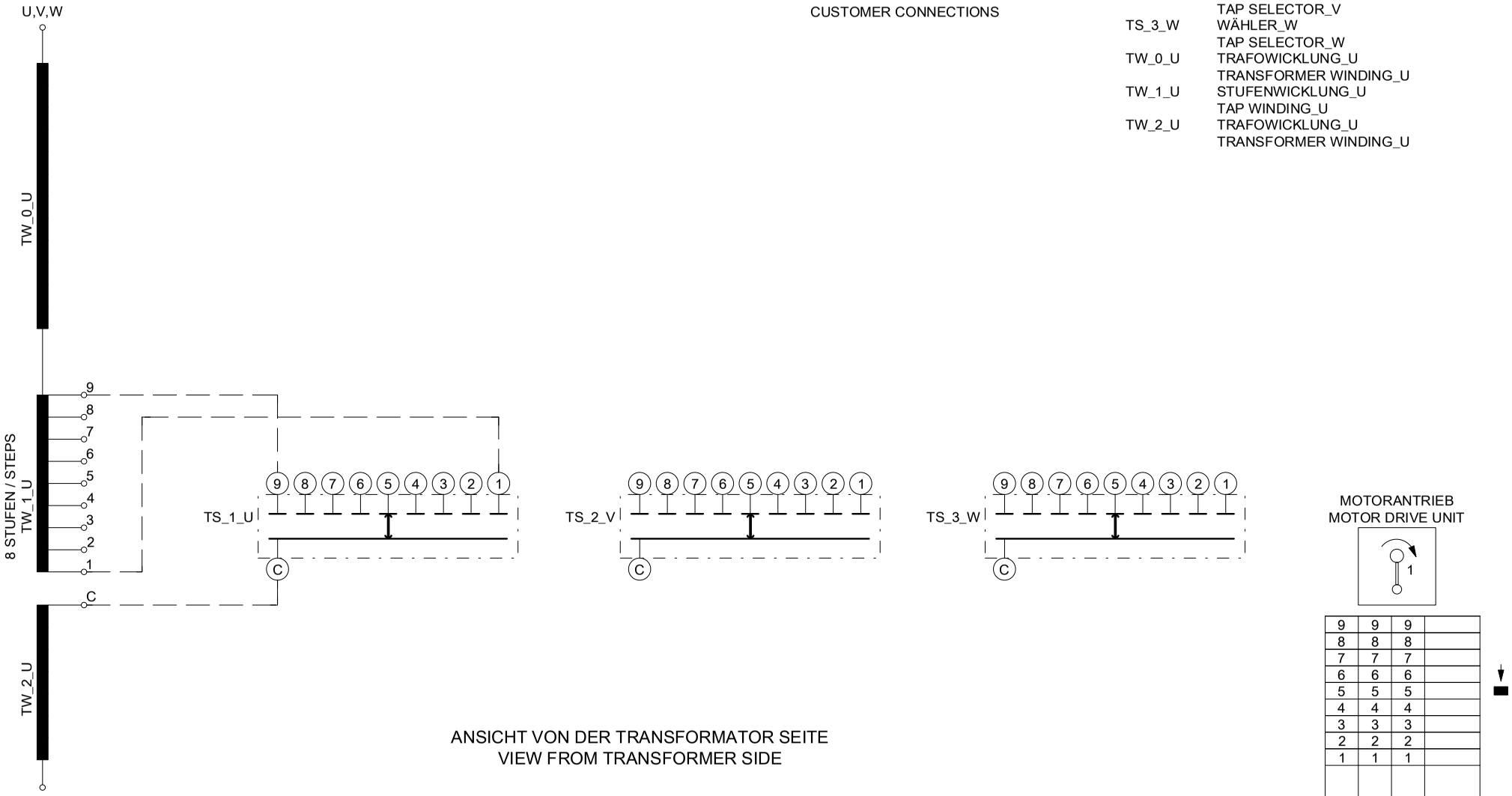

ANSICHT VON DER TRANSFORMATOR SEITE
VIEW FROM TRANSFORMER SIDE

9	9	9	
8	8	8	
7	7	7	
6	6	6	
5	5	5	
4	4	4	
3	3	3	
2	2	2	
1	1	1	

BETRIEBSSTELLUNGEN SERVICE POSITIONS	9
VERSCHIEDENE SPANNUNGEN DIFFERENT VOLTAGES	9
JUSTIERSTELLUNG ADJUSTMENT POSITION ■	5

BETRIEBSSTELLUNG
SERVICE POSITION
BEZEICHNUNG DER WÄHLERKONTAKTE
DESIGNATION OF TAP SELECTOR CONTACTS
BEZEICHNUNG DER STELLUNGEN
DESIGNATION OF POSITIONS
REGELBEREICH (kV)
REGULATION RANGE (kV)

Fuer diese technische Unterlage behalten wir uns gemaess DIN 34 Abschnitt 2.1 und 2.2 alle Rechte vor.
DRAWING BY CAD
DO NOT MODIFY MANUALLY

NO.	MODIFICATION	DATE	NAME
		DATE	09.07.2021
		EXEC.	KONFIG
		VERIFIED	SO
		STANDARD	

SCHALTBILD
CONNECTION DIAGRAM

ORIGIN. | REPL. | REPL.BY

LASTSTUFENSCHALTER
ON-LOAD TAP-CHANGER

ECOTAP®VPD III 30D-24-09 09 0

LANGUAGE: DE EN

PROJECT: 8049434_01

SHEET 1
1 SH.

16.4 Dimensional drawing and connection diagram for control unit

MASCHINENFABRIK REINHAUSEN GMBH COPYRIGHT RESERVED
THE REPRODUCTION, DISTRIBUTION AND UTILIZATION OF THIS DOCUMENT AS WELL AS THE COMMUNICATION OF ITS CONTENTS TO OTHERS WITHOUT EXPRESS AUTHORIZATION IS PROHIBITED. OFFENDERS WILL BE HELD LIABLE FOR THE PAYMENT OF DAMAGES. ALL RIGHTS RESERVED IN THE EVENT OF THE GRANT OF A PATENT, UTILITY MODEL OR DESIGN.

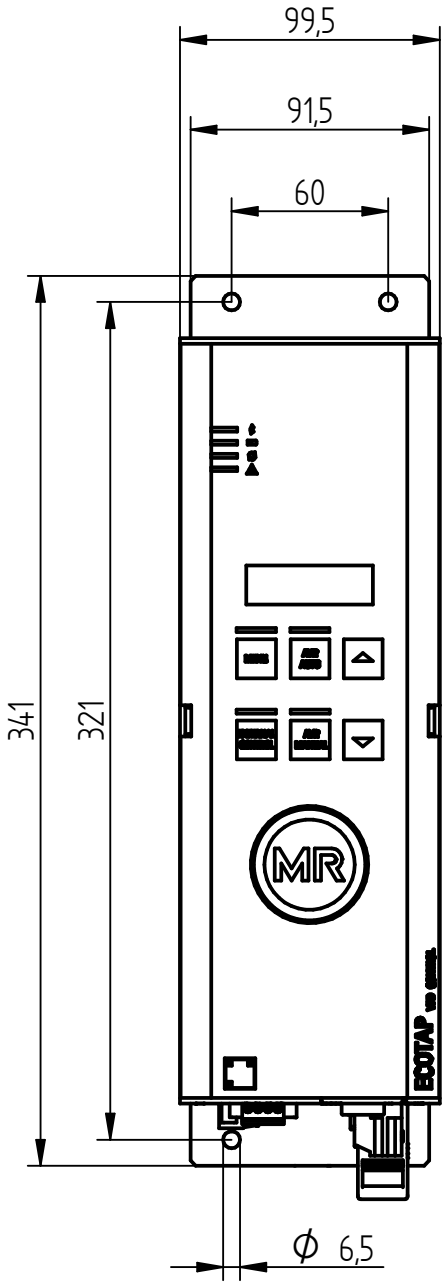

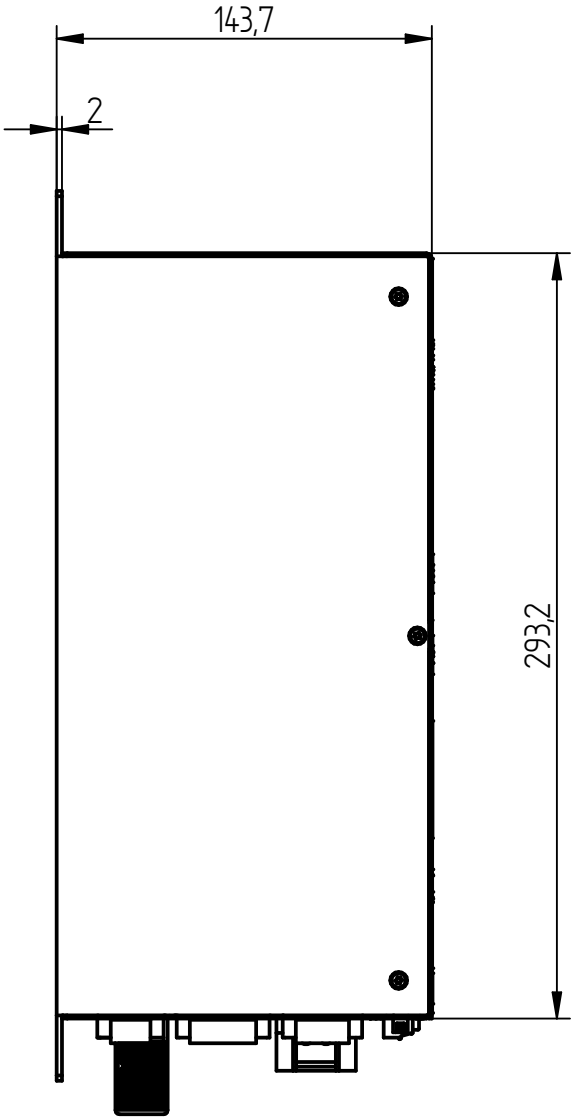

	DATE	NAME	DOCUMENT NO.	
DFTR.	08.04.2024	STEPHAN	SED 10954267 000 01	
CHKD.	09.04.2024	KREUPLM	CHANGE NO.	SCALE
STAND	10.04.2024	KLEYN	1127784	1:2

DIMENSION IN mm EXCEPT AS NOTED

Ecotap VPD Control
DIMENSION DRAWING

SERIAL NUMBER
–

MATERIAL NUMBER
101814950E

SHEET
1 / 1

A3

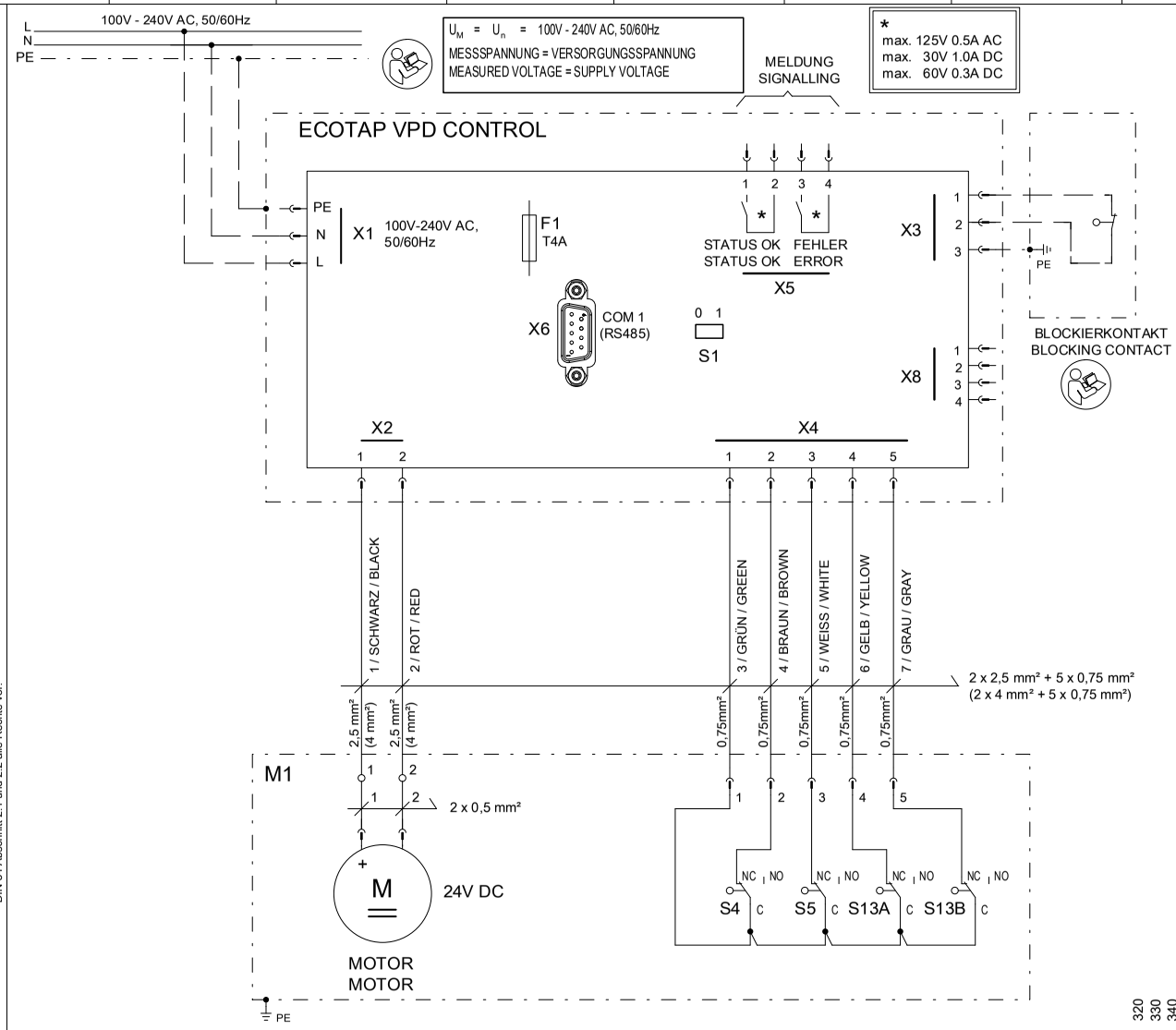

M1 MOTOR 24V DC
MOTOR 24V DC

S1 ABSCHLUSSWIDERSTAND FÜR MODBUS RTU EIN/AUS
TERMINATING RESISTOR FOR MODBUS RTU ON/OFF

S13A NOCKENSCHALTER RICHTUNGSUNABHAENGIG
CAM-OPERATED NON-DIRECTIONAL SWITCH

S13B NOCKENSCHALTER RICHTUNGSUNABHAENGIG
CAM-OPERATED NON-DIRECTIONAL SWITCH

S4 ENDSTELLUNGSSCHALTER
END POSITION SWITCH

S5 ENDSTELLUNGSSCHALTER
END POSITION SWITCH

X1 STECKVERBINDER SPANNUNGSVERSORGUNG / MESSUNG
PLUG CONNECTOR POWER SUPPLY / MEASUREMENT VOLTAGE

X2 STECKVERBINDER MOTOR
CONNECTOR MOTOR

X3 STECKVERBINDER BLOCKIERKONTAKT
PLUG CONNECTOR BLOCKING CONTACT

X4 STECKVERBINDER NOCKENSCHALTER
PLUG CONNECTOR CAM SWITCH

X5 STECKVERBINDER MELDUNG
PLUG CONNECTOR MESSAGE

X6 SCHNITTSTELLE RS485
INTERFACE RS485

X8 MR SERVICE SCHNITTSTELLE
MR SERVICE INTERFACE

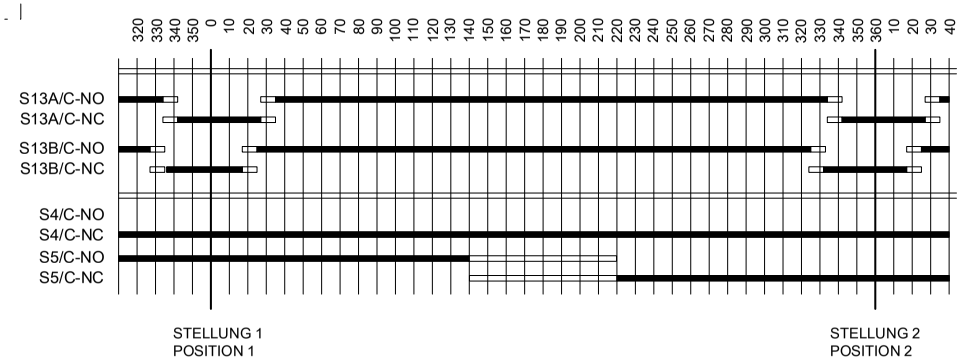

Fuer diese technische Unterlage behalten wir uns gemaess
DIN 34 Abschnitt 2.1 und 2.2 alle Rechte vor.

DRAWING BY CAD
DO NOT MODIFY MANUALLY

NO.	MODIFICATION	DATE	NAME
		DATE	16.06.2025
		EXEC.	KONV
		VERIFIED	SO
		STANDARD	

STEUERUNG
CONTROL

ORIGIN. | REPL. | REPL.BY

ECOTAP VPD CONTROL

LANGUAGE: DE EN

PROJECT: 10921611_02

SHEET 1
2 SH.

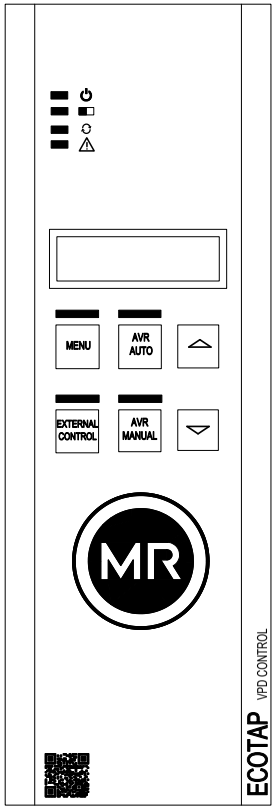

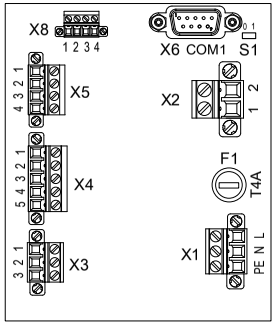

Fuer diese technische Unterlage behalten wir uns gemaess
DIN 34 Abschnitt 2.1 und 2.2 alle Rechte vor.

DRAWING BY CAD
DO NOT MODIFY MANUALLY

NO.	MODIFICATION	DATE	NAME

DATE	16.06.2025
EXEC.	KONV
VERIFIED	SO
STANDARD	

AUFBAUPLAN
CABINET LAYOUT

ORIGIN. | REPL. | REPL.BY

ECOTAP VPD CONTROL

LANGUAGE: DE EN

PROJECT: 10921611_02

SHEET 2
2 SH.

MASCHINENFABRIK REINHAUSEN GMBH COPYRIGHT RESERVED
THE REPRODUCTION, DISTRIBUTION AND UTILIZATION OF THIS DOCUMENT AS WELL AS THE COMMUNICATION OF ITS CONTENTS TO OTHERS WITHOUT EXPRESS AUTHORIZATION IS PROHIBITED. OFFENDERS WILL BE HELD LIABLE FOR THE PAYMENT OF DAMAGES. ALL RIGHTS RESERVED IN THE EVENT OF THE GRANT OF A PATENT, UTILITY MODEL OR DESIGN.

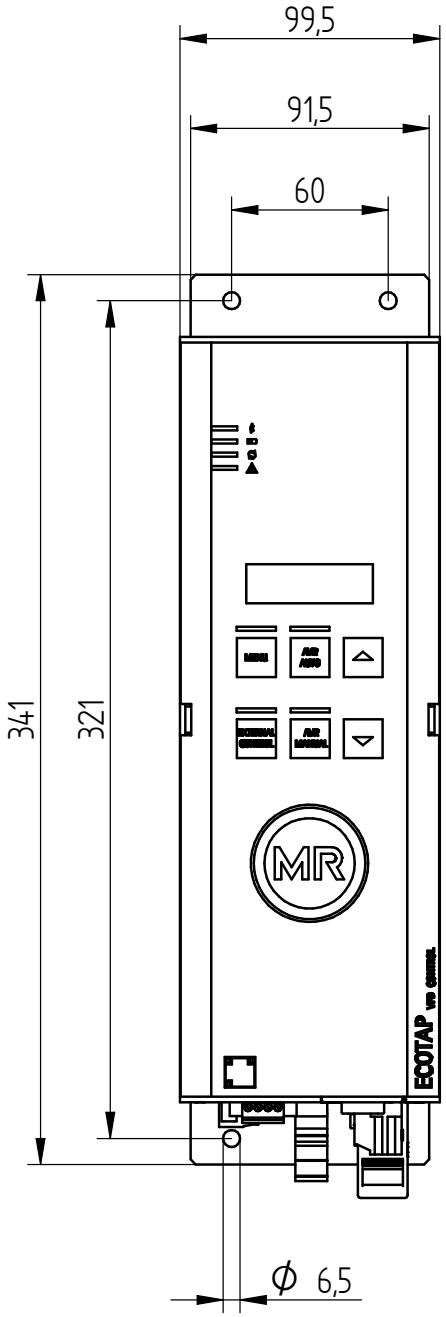

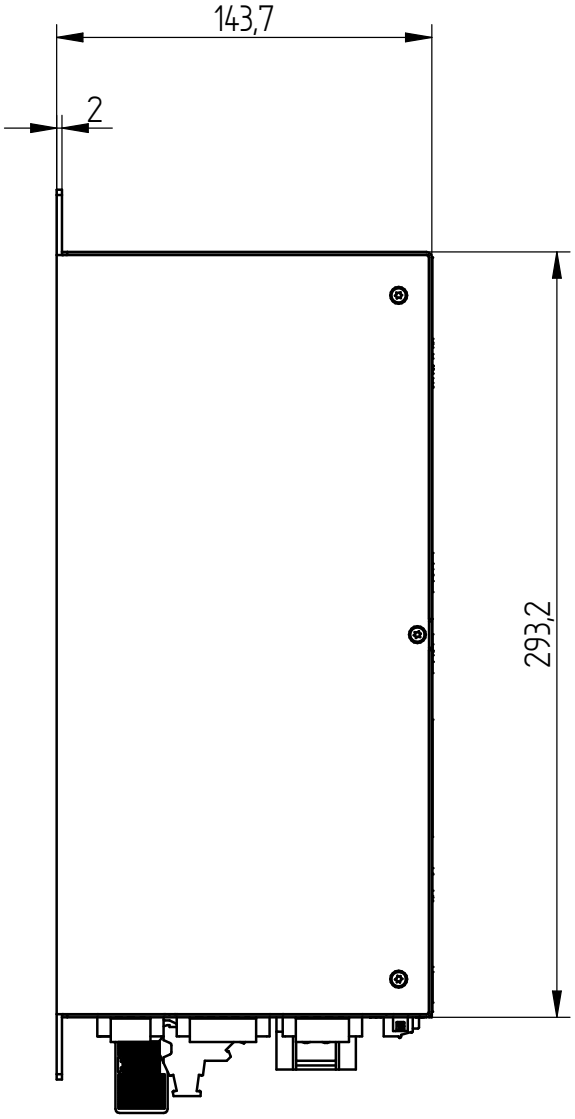

	DATE	NAME	DOCUMENT NO.	
DFTR.	08.04.2024	STEPHAN	SED 10311922 000 02	
CHKD.	09.04.2024	KREUPLM	CHANGE NO.	SCALE
STAND.	10.04.2024	KLEYN	1127784	1:2

DIMENSION IN mm EXCEPT AS NOTED

Ecotap VPD Control DS
DIMENSION DRAWING

SERIAL NUMBER
–

MATERIAL NUMBER 101767570E

SHEET 1 / 1

A3

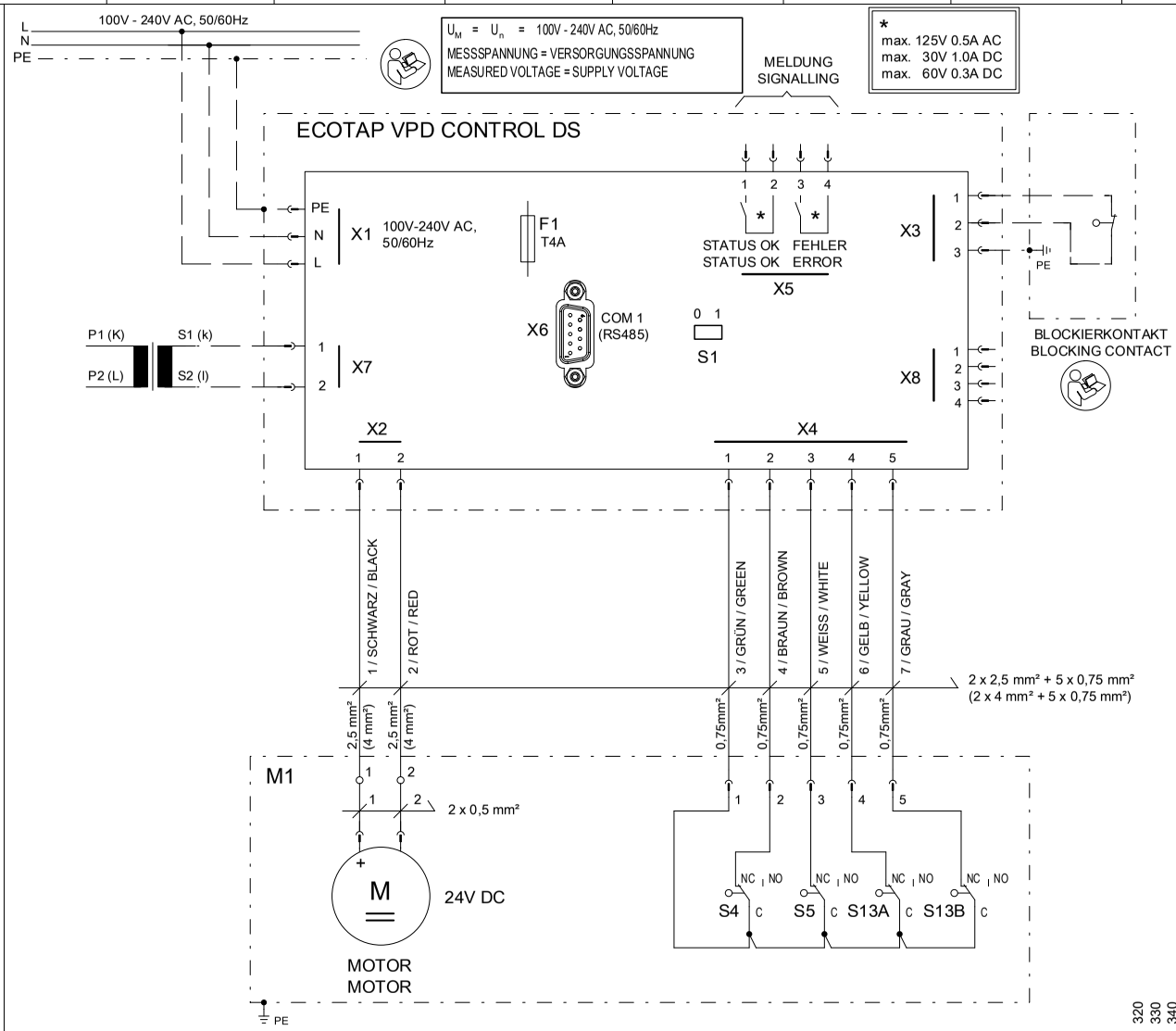

M1 MOTOR 24V DC
MOTOR 24V DC

S1 ABSCHLUSSWIDERSTAND FÜR MODBUS RTU EIN/AUS
TERMINATING RESISTOR FOR MODBUS RTU ON/OFF

S13A NOCKENSCHALTER RICHTUNGSUNABHAENGIG
CAM-OPERATED NON-DIRECTIONAL SWITCH

S13B NOCKENSCHALTER RICHTUNGSUNABHAENGIG
CAM-OPERATED NON-DIRECTIONAL SWITCH

S4 ENDSTELLUNGSSCHALTER
END POSITION SWITCH

S5 ENDSTELLUNGSSCHALTER
END POSITION SWITCH

X1 STECKVERBINDER SPANNUNGSVERSORGUNG / MESSUNG
PLUG CONNECTOR POWER SUPPLY / MEASUREMENT VOLTAGE

X2 STECKVERBINDER MOTOR
CONNECTOR MOTOR

X3 STECKVERBINDER BLOCKIERKONTAKT
PLUG CONNECTOR BLOCKING CONTACT

X4 STECKVERBINDER NOCKENSCHALTER
PLUG CONNECTOR CAM SWITCH

X5 STECKVERBINDER MELDUNG
PLUG CONNECTOR MESSAGE

X6 SCHNITTSTELLE RS485
INTERFACE RS485

X7 STROMWANDLERANSCHLUSS
CURRENT TRANSFORMER CONNECTION

X8 MR SERVICE SCHNITTSTELLE
MR SERVICE INTERFACE

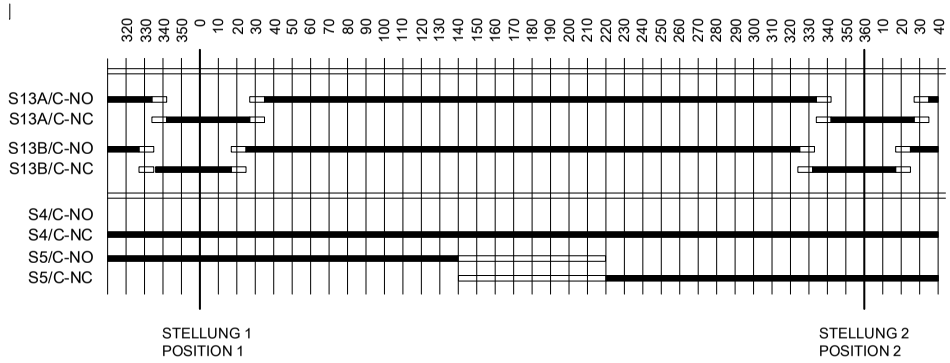

Fuer diese technische Unterlage behalten wir uns gemaess
DIN 34 Abschnitt 2.1 und 2.2 alle Rechte vor.

DRAWING BY CAD
DO NOT MODIFY MANUALLY

NO.	MODIFICATION	DATE	NAME
		DATE	16.06.2025
		EXEC.	KONV
		VERIFIED	SO
		STANDARD	

STEUERUNG
CONTROL

ORIGIN. | REPL. | REPL.BY

ECOTAP VPD CONTROL DS

LANGUAGE: DE EN

PROJECT: 10921613_02

SHEET 1
2 SH.

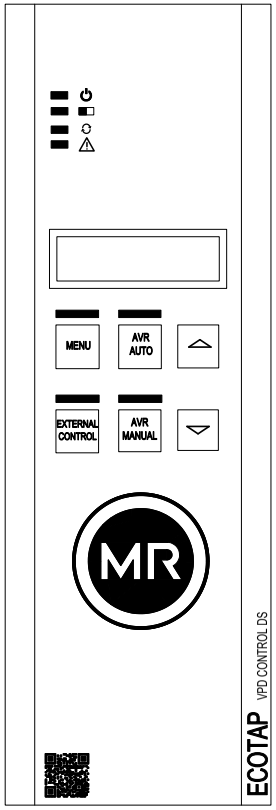

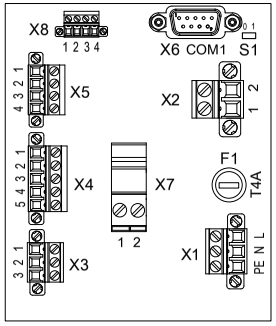

Fuer diese technische Unterlage behalten wir uns gemaess
DIN 34 Abschnitt 2.1 und 2.2 alle Rechte vor.

DRAWING BY CAD
DO NOT MODIFY MANUALLY

NO.	MODIFICATION	DATE	NAME

DATE	16.06.2025
EXEC.	KONV
VERIFIED	SO
STANDARD	

AUFBAUPLAN
CABINET LAYOUT

ORIGIN. | REPL. | REPL.BY

ECOTAP VPD CONTROL DS

LANGUAGE: DE EN

PROJECT: 10921613_02

SHEET 2
2 SH.

Maschinenfabrik Reinhausen GmbH
Falkensteinstrasse 8
93059 Regensburg
Germany
+49 941 4090-0
info@reinhausen.com
reinhausen.com

Please note:
The data in our publications may differ from the data of the devices delivered.
We reserve the right to make changes without notice.
8209941/05 EN - ECOTAP® VPD® III 30D-24 / MD&C Operating instructions - F0402205 - 12/25
Maschinenfabrik Reinhausen GmbH 2025

THE POWER BEHIND POWER.