Design/versions

This technical document contains detailed information about the technical properties of the product. To place an order, please use the "Bestellangabenblatt (Inquiry and order specifications)" form, which you will find on our website http://www.reinhausen.com below the respective product. Further information is available in the MR Reinhausen customer portal: https://portal.reinhausen.com.

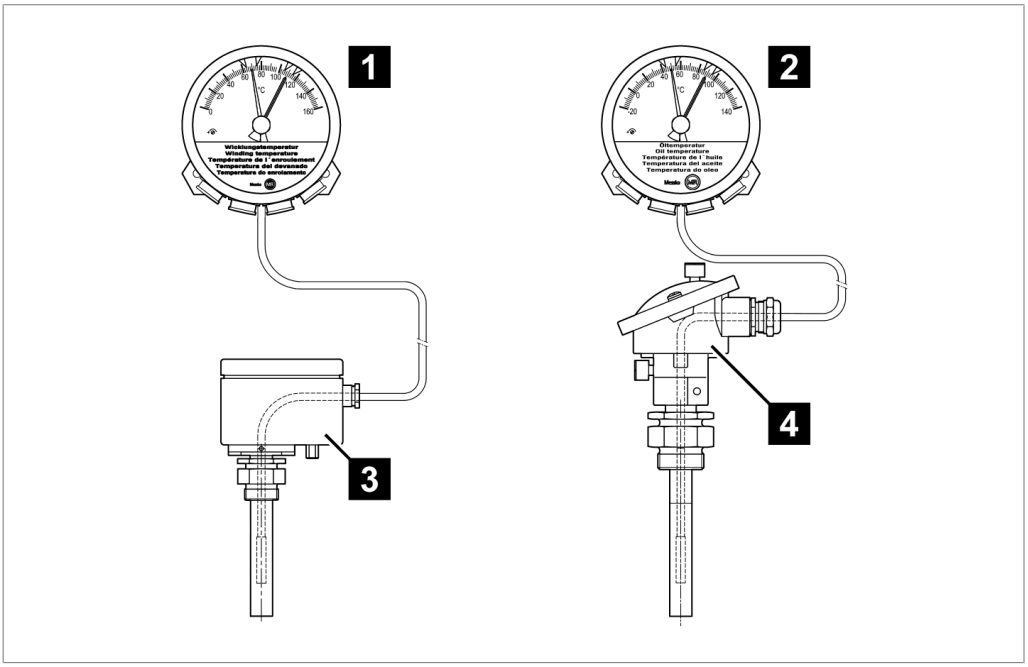

Figure 1: TRASY2 product versions

1	TRASY2 MT-STW160F2 – winding temperature	2	TRASY2 MT-ST160F – oil temperature
3	MESSKO® ZT-F2.1 transformer temperature transmitter (with Pt100 and/or 4…20 mA)	4	Combi well (with Pt100 and/or 4…20 mA)

TRASY2 overview

Depending on your order, the pointer thermometer features cable glands or NPT adapters.

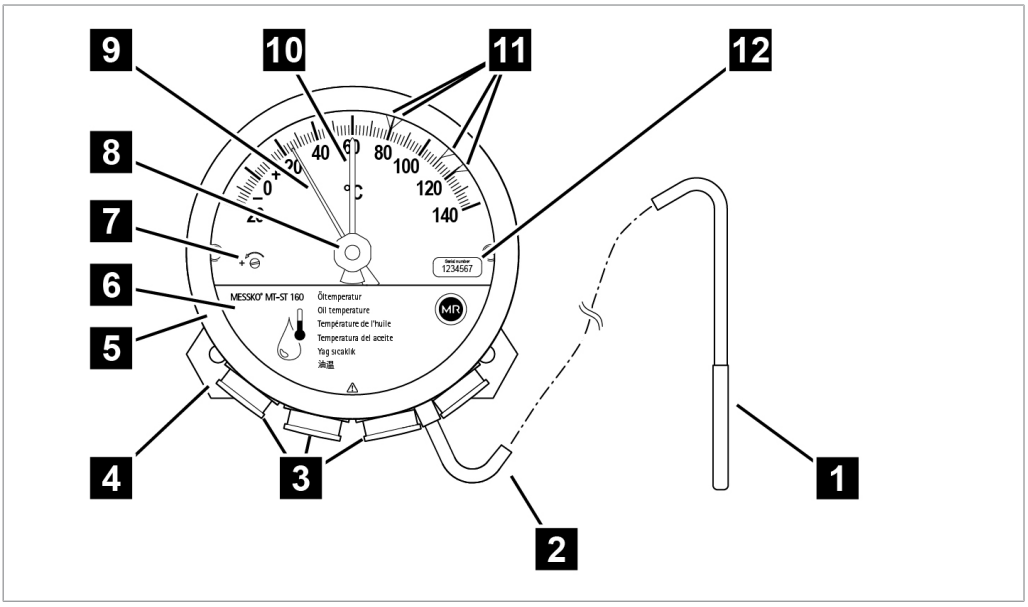

Figure 2: Pointer thermometer

1	Temperature sensor	2	Capillary line
3	Cable glands/adapters	4	Vibration-damping plate
5	Bayonet seal ring, glass pane and gasket	6	Cover plate
7	Calibration screw	8	Drag hand reset
9	Pointer	10	Drag hands
11	Adjustable micro-switches	12	Label with serial number

The pointer thermometer is calibrated at the factory. Do not adjust the calibration screw **7**, or else the device's warranty will be voided!

Function description

Depending on the design, the pointer thermometer measures the oil temperature or winding temperature in power transformers, distribution transformers, arc suppression reactors or shunt reactors. The pointer thermometer sensor is located in a thermo well, combi well or ZT-F2.1 temperature transmitter. These in turn are mounted in a thermometer pocket which is embedded in the transformer.

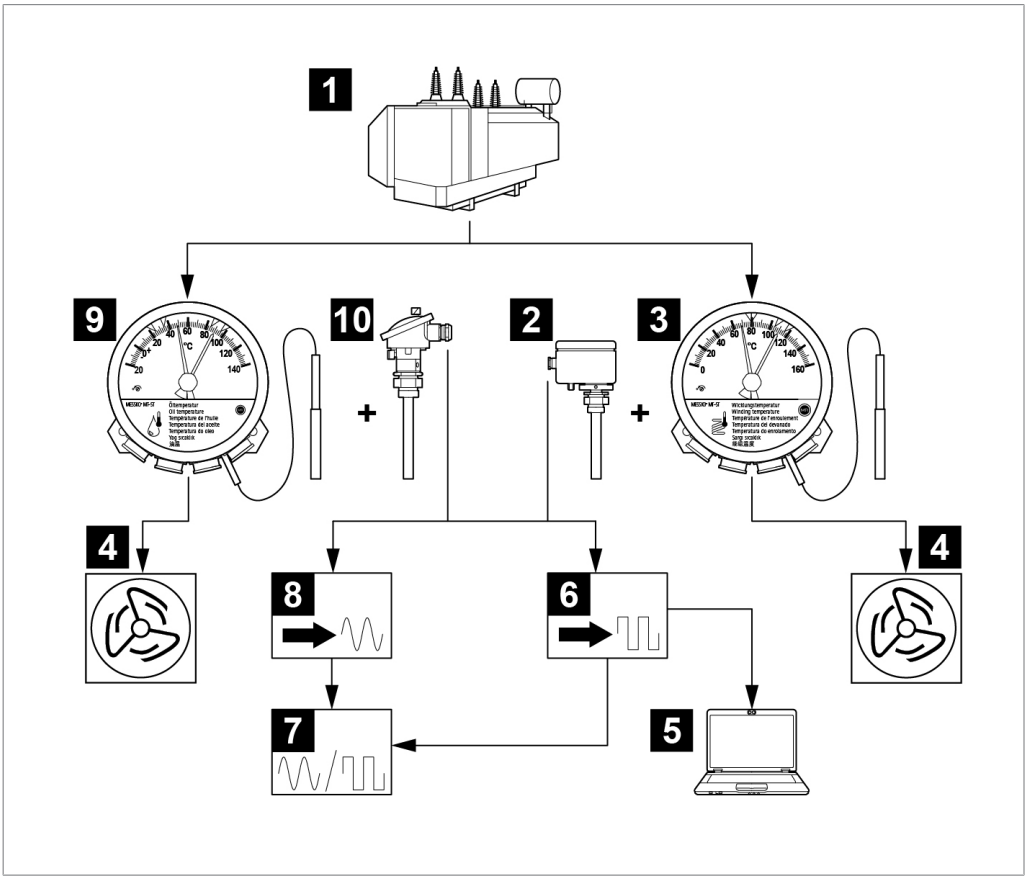

Figure 3: Example of temperature measurement and temperature display

1	Transformer	2	Temperature transmitter
3	Pointer thermometer for winding temperature	4	Transformer fan
5	SCADA	6	Digital signal converter
7	Digital display/analog display	8	Analog signal converter
9	Pointer thermometer for oil temperature	10	Combi well

Temperature sensor

TRASY temperature sensor overview

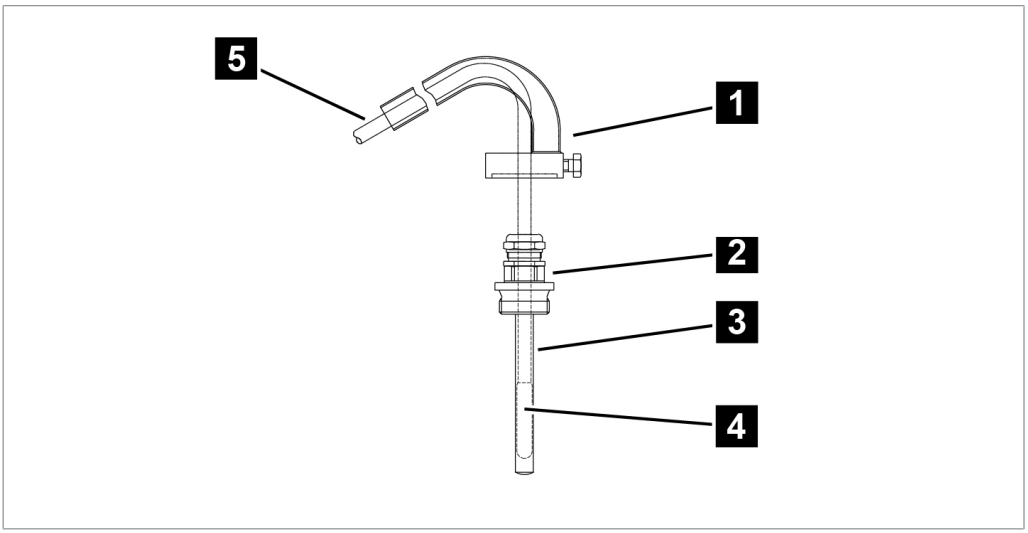

Figure 4: Temperature sensor in G1" thermo well

1	Step protection (optional)	2	G1" thermo well screw connection
3	G1" thermo well	4	Temperature sensor
5	Capillary line		

Technical data – oil temperature / winding temperature

Operating/ambient conditions	MESSKO® MT-STW160F / MESSKO® MT-STW160F2 / TRASY2 series
Location of use	Indoors and outdoors, tropic-proof
Operating temperature	-40...+80 °C
Storage temperature	-50...+80 °C
Ambient air temperature	-50...+80 °C
Insulating fluid temperature	Measuring range +/- 20%
Installation altitude	2,000 m above mean sea level
Degree of protection	IP55 in accordance with DIN EN 60529 VDE 0470-1
Protection class	1
Overvoltage category	III
Relative humidity	Viewing glass, fog-resistant up to 80% relative humidity due to ventilation device
Contamination level	2
General	
Housing (standard)	Sheet steel, galvanized, coated in RAL 7033 in accordance with DIN EN ISO 12944-9 corrosion protection class C4H
Offshore optional	As per the requirements in accordance with DIN EN ISO 12944-9 with corrosion-protection class CX
Housing color	RAL 7033 cement gray; RAL 7038 agate gray
Front ring and housing	Powder-coated, bayonet ring with silicone seal
Housing dimensions	Ø 173 mm [Ø 6.81″]; Depth 98 mm [3.86″]
Weight	Approx. 2.5 kg (6 m capillary line)
Housing color	RAL 7033 cement gray; RAL 7038 agate gray
Inspection window	Laminated safety glass with UV filter
Temperature sensor	Bare brass
Retaining plate	Stainless steel
Capillary line	Copper capillaries with PVC protective tube and optional add-on stainless steel protective tube
Capillary line length	2 m / 4 m / 6 m / … / 20 m possible
Cable gland	4 x M25x1.5 nickel-plated brass
Drag hands	Drag hands that can be reset manually, red

Measuring ranges	MESSKO® MT-STW160F / MESSKO® MT-STW160F2 / TRASY2 series
Winding temperature measuring range*	0...+160 °C
Oil temperature measuring range*	-20...+140 °C
Tolerance	±3 °C in accordance with DIN EN 13190 Class 1 and DIN 16196

* Other measuring ranges on request

Connection terminals	
Cross section	1.5...2.5 mm², 16...12 AWG (rigid or flexible)

Also refer to

Technical data – accessories [▶ 8]

Micro-switches

Quantity	1…6 adjustable micro-switches
Minimum switching distance	6% of the measuring range for standard switch arrangement; <1 K for narrowing
Switching hysteresis	Approx. 5 K (for decreasing temperature)
Rated insulation voltage in accordance with IEC 60076-22-1	2,500 V AC/1 min; terminals to ground 1,000 V AC/1 min; between open terminals
Lightning impulse withstand voltage in accordance with IEC 60076-22-1	4,000 V; terminals to ground 3,000 V; between open contacts
Contact material	Standard: silver alloy (AgNi10) Optional: gold-plated contacts
Contact type	Change-over contact, normally open contact

Switching capacity Standard switch in accordance with IEC 60076-22-1	230 V AC Making capacity: 250 VA, cos φ > 0.5 Breaking capacity: 60 VA, cos φ > 0.5
	24…220 V DC Making capacity: 130 W, L/R < 40 ms Breaking capacity: 25 W, L/R < 40 ms
Switching capacity, switch with gold-plated contacts* *) Switching higher loads destroys the gold layer	230 V AC Switching capacity: Max. 6.9 VA, cos φ = 0.9
	24…220 V DC Switching capacity: Max. 6.6 W, L/R > 25 ms

Miniature circuit breaker	
– Rated current	6 A
– Triggering characteristic	C

Micro-switch arrangement

Depending on your order, the micro-switch arrangements can deviate from the following versions.

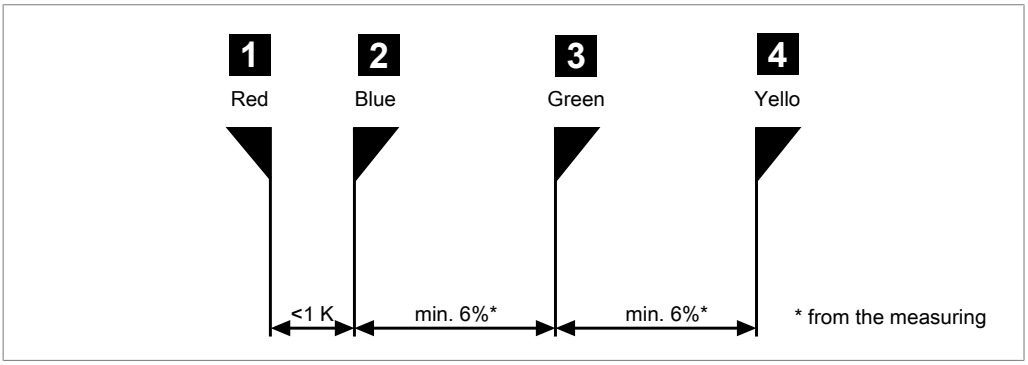

Figure 5: Switch arrangement 1+2

1 + 2	tight	<1 K	with standard model

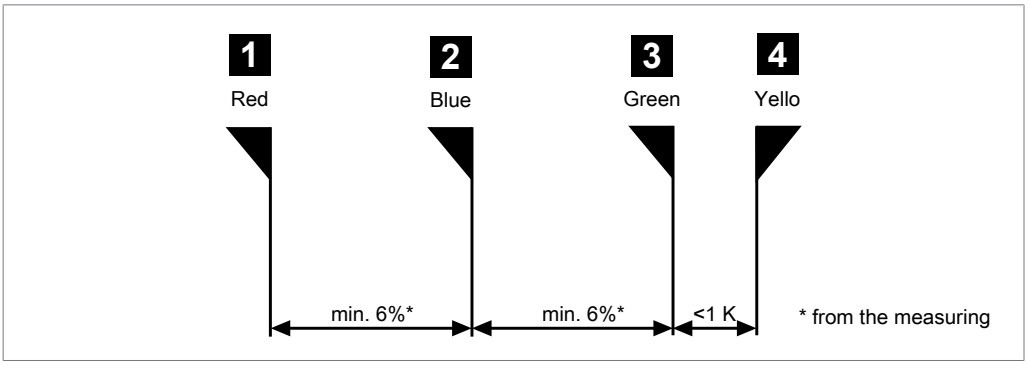

Figure 6: Switch arrangement 3+4

3 + 4	tight	<1 K

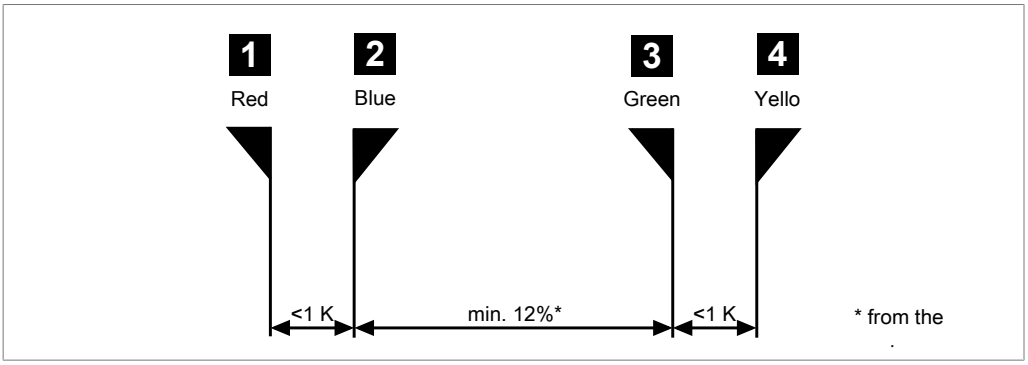

Figure 7: Switch arrangement 1+2 and 3+4

1 + 2 and 3 + 4	tight	<1 K

Technical data – accessories

Technical data	MESSKO® ZT-F2.1 temperature transmitter module
Function	Indirect measurement and simulation of the hotspot temperature in a transformer using the temperature gradient between the winding hotspot and coolant
	See Figure TRASY modules [▶ 11] and operating instructions for the MESSKO® ZT-F2.1 transformer temperature transmitter product
Operating conditions and ambient conditions	
Ambient temperature	-50...+80 °C
Degree of protection	IP56 in accordance with EN 60529, with pressure equalization element
Rated insulation voltage	50 V DC; 300 V AC 1 min.; terminals to ground
Location of use	Indoors and outdoors, tropic-proof
Mounting position	Any
General	
Housing	Cast aluminum, RAL 7033 coated
Well and screw connection	Bare brass; G1"B ≙ BSP1" double screw connection; others on request
Cable gland	2 x M25x1.5; 1 x M16x1.5; nickel-plated brass
Output signal	Pt100 measuring resistor in accordance with IEC 751 (100 Ω at 0 °C)
Measuring range	-50...+160 °C
Weight	Approx. 1.7 kg
Analog output (option)	
Output signal	4...20 mA
Supply voltage	DC: 12...30 V unregulated, max. 10% residual ripple, protected against polarity reversal
Measuring range	0...+160 °C standard
Max. load resistance	750 Ω at 24 V DC
Thermal map	
Heating	Integrated into the well
Gradient setting	Hotspot gradient via DIP switch in the housing Maximum: 50 K at 2 A CT nominal current
CT input	Nominal current 1.5...2.0 A from converter

Technical data	Thermo well module
Material	Bare brass
Screw connection	G1"B ≙ BSP1" male screw connection
Installation dimensions	See Figure 2 and Figure 5 [▶ 11]
Mounting position	Vertical
Weight	Approx. 0.25 kg

Technical data	Combi well module
	Figure 5 [▶ 11] and operating instructions for the MESSKO® combi well product
Operating conditions and ambient conditions	
Ambient temperature	-50...+80 °C
Rated insulation voltage	500 V AC/1 min; terminals to ground
Setup	Indoors and outdoors, tropic-proof
Mounting position	Any
General	
Housing	Cast aluminum, RAL 7033 coated
Well and screw connection	Bare brass; G1"B ≙ BSP1" double screw connection
Cable gland	2 x M20x1.5; nickel-plated brass
Output signal	Pt100 measuring resistor, Class B in accordance with IEC 751 (100 Ω at 0 °C)
Measuring range	-50...+160 °C
Weight	Approx. 0.8 kg
Analog output (option)	
Output signal	4...20 mA

Technical data	Combi well module
Supply voltage	DC: 12...30 V unregulated, max. 10% residual ripple, protected against polarity reversal
Measuring range	-20...+140 °C standard
Max. load resistance	750 Ω at 24 V DC

Technical data	MESSKO® SNT36 power supply module
	See the operating instructions for the MESSKO® SNT36 DC power supply product

Technical data	MESSKO® multi-ballast transformer module
	See the operating instructions for the MESSKO® multi-ballast transformer product
Assembly versions	With mounting plate
	On rails
	With housing (RAL 7033)

Technical data	MESSKO® TRASY2 / MESSKO® COMPACT assembly version
	For connection options, see Figure 8

TRASY2 dimensions

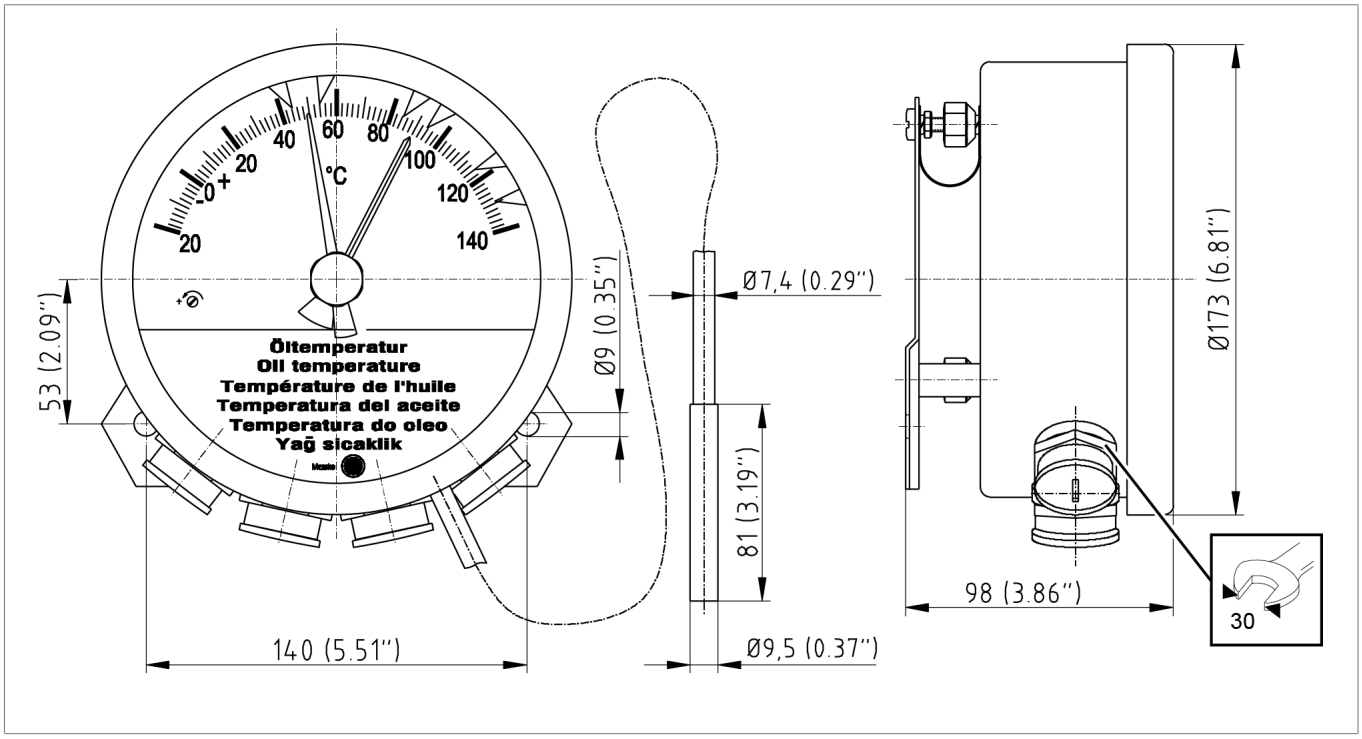

Figure 8: Installation dimensions for oil temperature and winding temperature TRASY2 series

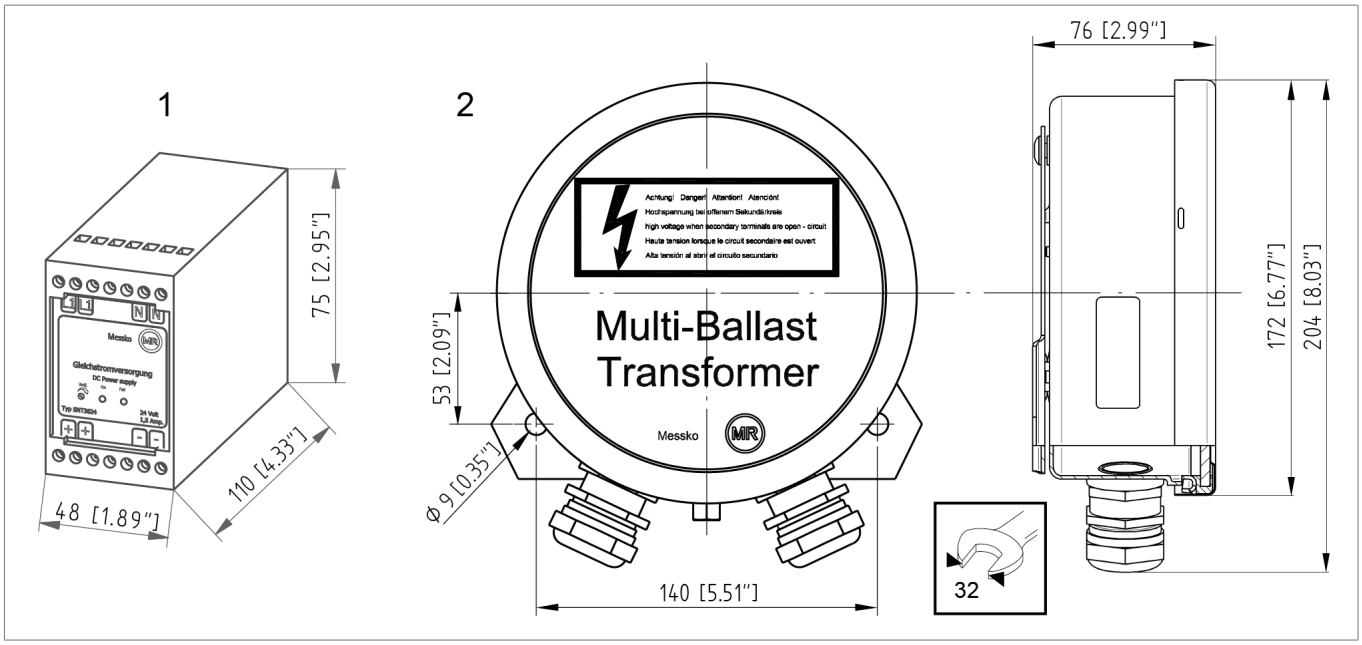

Figure 9: Installation dimensions for additional devices

1	Power supply	2	Multi-ballast transformer

TRASY2 series installation

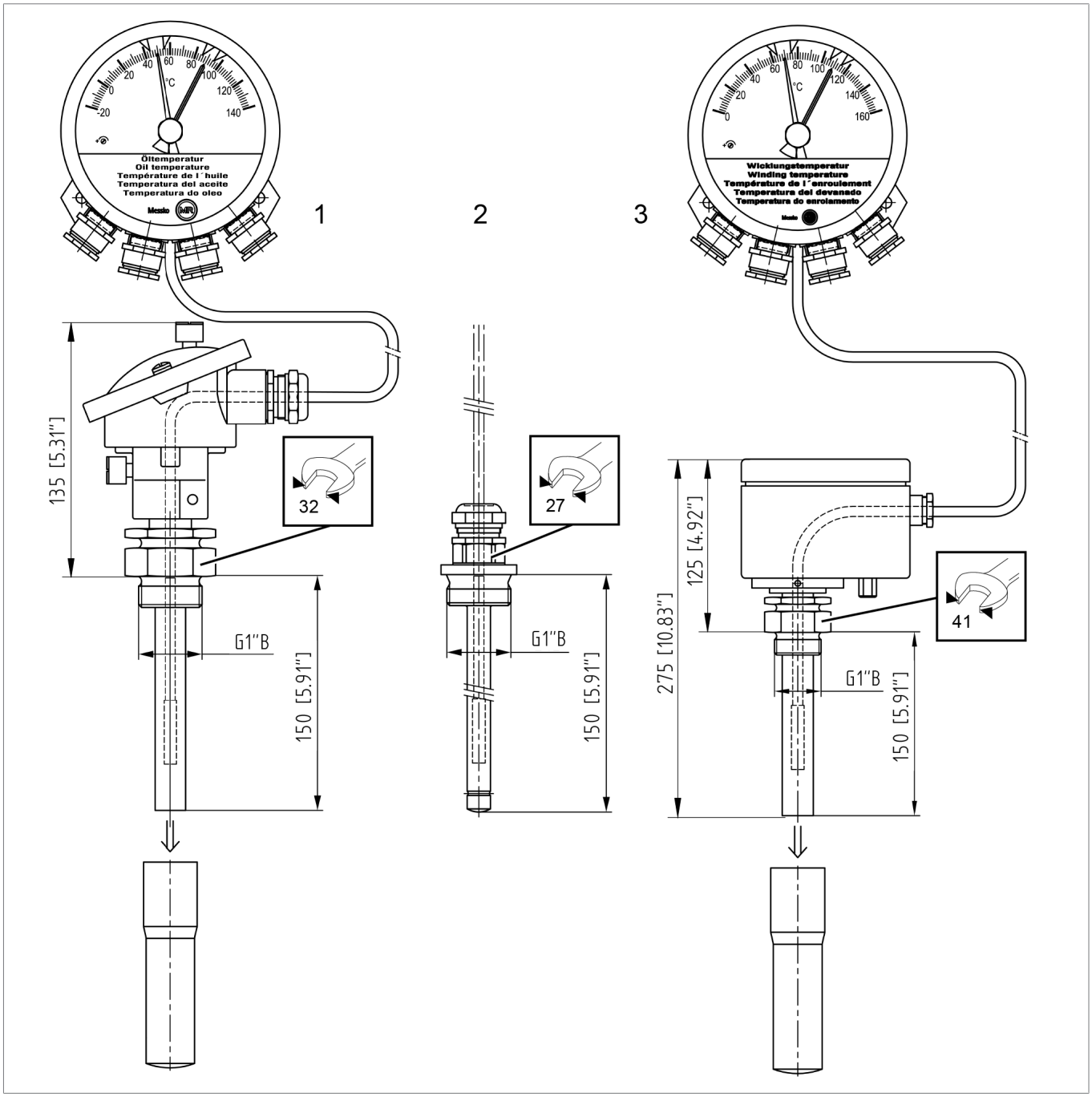

Figure 10: TRASY2 modules

1 Combi well for Pt100 (RTD) or 4...20 mA, –20...+140 °C		
2 G1" thermo well		
3 MESSKO® ZT-F2.1	with	1 or 2 x Pt100
		1 or 2 x 4...20 mA, 0...+160 °C
		1 x Pt100, 1 x 4...20 mA, 0...+160 °C
		1 x Pt100, 1 x 4…20 mA, –20...+140 °C

Dimensional drawings for sensor and other accessories

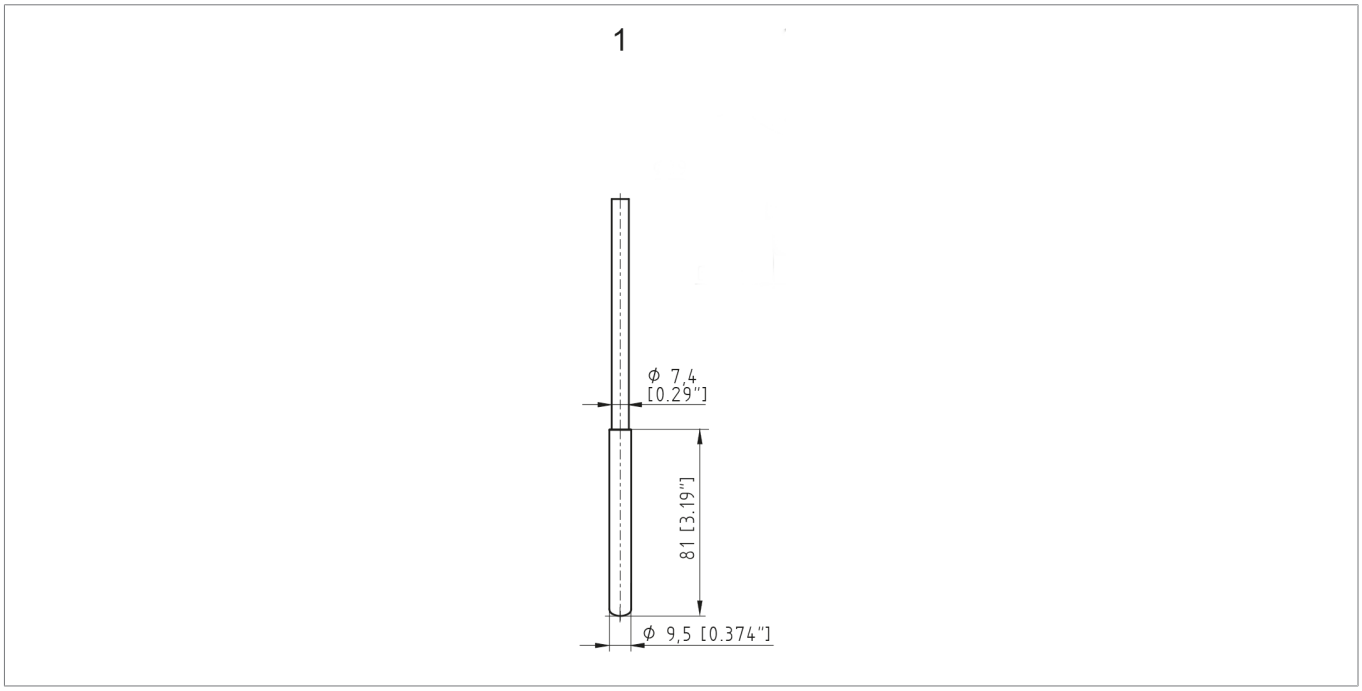

Figure 11: TRASY2_sensor_int

1	Sensor No. 2 for TRASY2 series, brass/stainless steel

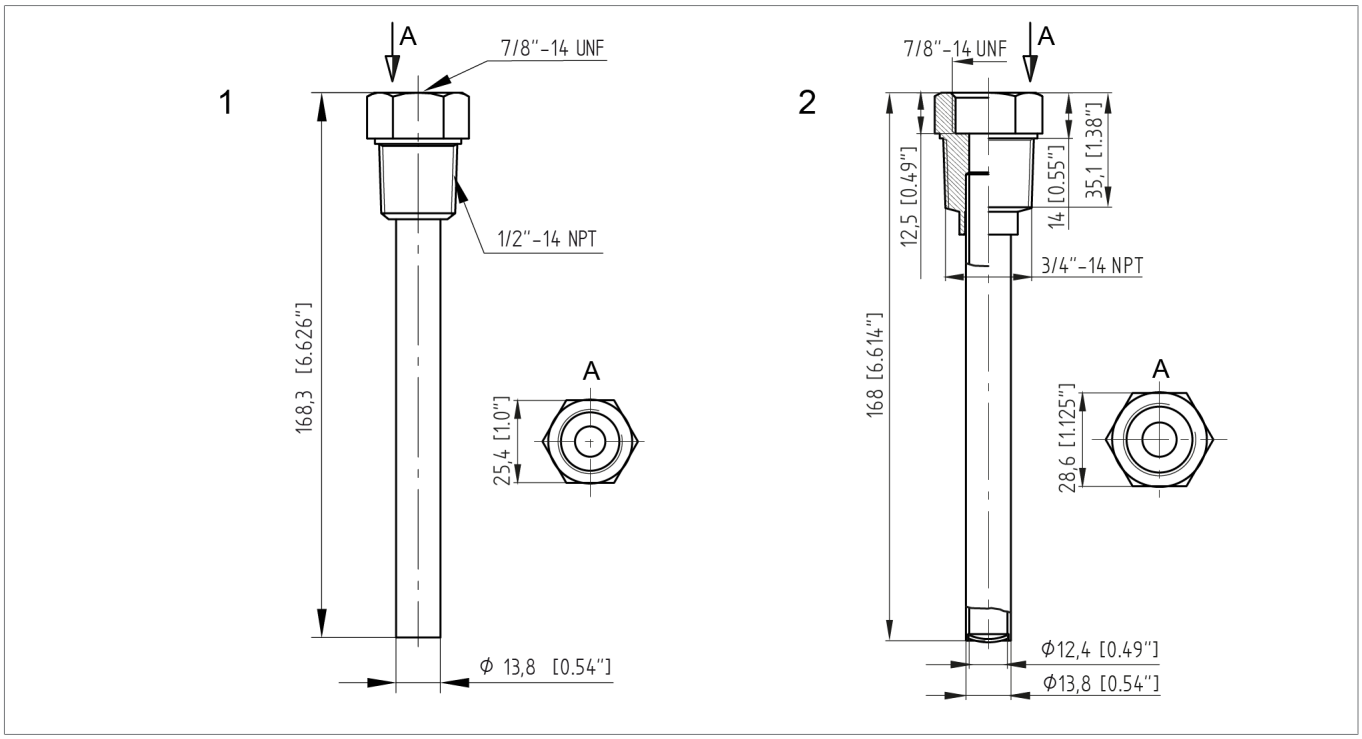

Figure 12: Thermo wells

1	1/2"-14 NPT (7/8"-14 UNF) thermo well	2	3/4"-14 NPT (7/8"-14 UNF) thermo well

Maschinenfabrik Reinhausen GmbH
Falkensteinstrasse 8
93059 Regensburg

+49 (0)941 4090-0
sales@reinhausen.com

www.reinhausen.com

9081807/00 EN - MESSKO® TRASY2 -
- 01/23 - Maschinenfabrik Reinhausen GmbH 2023

THE POWER BEHIND POWER.