Manual Drive
TAPMOTION® DD

Operating Instructions

1914122/03 EN

The original operating instructions were written in German.

Table of contents

1 Introduction

This technical file contains detailed descriptions on the safe and proper installation, connection, commissioning and monitoring of the product.

It also includes safety instructions and general information about the product.

This technical file is intended solely for specially trained and authorized personnel.

1.1 Validity

This technical file is valid for the TAPMOTION® DD product.

1.2 Manufacturer

The product is manufactured by:

Maschinenfabrik Reinhausen GmbH

Falkensteinstraße 8
93059 Regensburg, Germany
Tel.: (+49) 9 41/40 90-0
Fax: (+49) 9 41/40 90-7001
E-mail: sales@reinhausen.com

Further information on the product and copies of this technical file are available from this address if required.

1.3 Subject to change without notice

The information contained in this technical file comprises the technical specifications approved at the time of printing. Significant modifications will be included in a new edition of the technical file.

The document number and version number of this technical file are shown in the footer.

1.4 Completeness

This technical file is incomplete without the supporting documentation.

1.5 Supporting documents

The following documents also apply in addition to this technical file:

- Quick reference guide
- Unpacking instructions
- Connection diagrams

Also observe generally valid legislation, standards, guidelines and specifications on accident prevention and environmental protection in the respective country of use.

1.6 Safekeeping

This technical file and all supporting documents must be kept ready at hand and accessible for future use at all times.

1.7 Notation conventions

This section contains an overview of the abbreviations, symbols and textual emphasis used.

1.7.1 Symbols used

Symbol	Definition
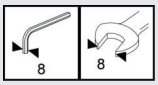	Wrench size
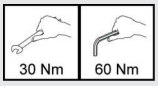	Tightening torque
	Number and type of fastening materials used
	Fill with oil
	Cut open, cut through
	Clean
	Visual inspection
	Use your hand
	Adapter ring
	Apply a coat of paint

Symbol	Definition
	Use a file
	Grease
	Coupling bolt
	Use a ruler
	Use a saw
	Hose clip

Table 1: Symbols used

1.7.2 Hazard communication system

Warnings in this technical file use the following format:

⚠ WARNING

Type and source of danger

Consequences

- ► Action
- ► Action

The following signal words are used:

Signal word	Level of danger	Consequence of failure to comply
Danger	Immediate threat of danger	Death or serious injury could occur
Warning	Possible threat of danger	Death or serious injury could occur
Caution	Possible dangerous situation	Minor or moderate injury could occur
Notice	Possible dangerous situation	Damage to property

Table 2: Signal words in warning notices

Pictograms warn of dangers:

Pictogram	Definition
	Danger
	Dangerous electrical voltage
	Fire hazard
	Danger of tipping

Table 3: Pictograms used in warning notices

1.7.3 Information system

Information is designed to simplify and improve understanding of particular procedures. In this technical file it is laid out as follows:

Important information.

2 Safety

2.1 General safety information

The technical file contains detailed descriptions on the safe and proper installation, connection, commissioning and monitoring of the product.

- Read this technical file through carefully to familiarize yourself with the product.
- Particular attention should be paid to the information given in this chapter.

2.2 Appropriate use

The product and associated equipment and special tools supplied with it comply with the relevant legislation, regulations and standards, particularly health and safety requirements, applicable at the time of delivery.

If used as intended and in compliance with the specified requirements and conditions in this technical file as well as the warning notices in this technical file and attached to the product, then the product does not present any hazards to people, property or the environment. This applies throughout the product's entire life, from delivery through installation and operation to disassembly and disposal.

The operational quality assurance system ensures a consistently high quality standard, particularly in regard to the observance of health and safety requirements.

The following is considered appropriate use

- the product must be operated in accordance with this technical file and the agreed delivery conditions and technical data
- the associated equipment and special tools supplied with it are used solely for the intended purpose and in accordance with the specifications of this technical file
- the product must only be used with the on-load tap-changer/off-circuit tap-changer specified in the order
- the serial number of the drive must match that of the on-load tap-changer/off-circuit tap-changer.

2.3 Inappropriate use

Use is considered to be inappropriate if the product is used other than as described in the Appropriate use section.

Maschinenfabrik Reinhausen does not accept liability for damage resulting from unauthorized or inappropriate changes to the product. Inappropriate changes to the product without consultation with Maschinenfabrik Reinhausen can lead to personal injury, damage to property and operational disruption.

2.4 Personnel qualification

The product is designed solely for use in electrical energy systems and facilities operated by appropriately trained staff. This staff comprises people who are familiar with the installation, assembly, commissioning and operation of such products.

2.5 Operator's duty of care

To prevent accidents, disruptions and damage as well as unacceptable adverse effects on the environment, those responsible for transport, installation, operation, maintenance and disposal of the product or parts of the product must ensure the following:

- All warning and hazard notices are complied with.
- Personnel are instructed regularly in all relevant aspects of operational safety, the operating instructions and particularly the safety instructions contained therein.
- Regulations and operating instructions for safe working as well as the relevant instructions for staff procedures in the case of accidents and fires are kept on hand at all times and are displayed in the workplace where applicable.
- The product is only used when in a sound operational condition and safety equipment in particular is checked regularly for operational reliability.
- Only replacement parts, lubricants and auxiliary materials which are authorized by the manufacturer are used.
- The specified operating conditions and requirements of the installation location are complied with.
- All necessary devices and personal protective equipment for the specific activity are made available.
- The prescribed maintenance intervals and the relevant regulations are complied with.
- Installation, electrical connection and commissioning of the product may only be carried out by qualified and trained personnel in accordance with this technical file.
- The operator must ensure appropriate use of the product.

2.6 Personal protective equipment

Personal protective equipment must be worn during work to minimize risks to health.

- Always wear the personal protective equipment required for the job at hand.
- Follow information about personal protective equipment provided in the work area.

Always wear	
	**Protective clothing** Close-fitting work clothing with a low breaking strength, with tight sleeves and with no protruding parts. It mainly serves to protect the wearer against being caught by moving machine parts. Do not wear any rings, necklaces or other jewelry.
	**Safety shoes** To protect against falling heavy objects and slipping on slippery surfaces.

Table 4: Personal protective equipment to be worn at all times

Wear the following in special environments	Special personal protective equipment is needed in special environments. The choice of equipment depends on the circumstances.
	**Safety glasses** To protect the eyes from flying parts and splashing liquids.
	**Hard hat** To protect from falling and flying parts and materials.
	**Hearing protection** To protect from hearing damage.

Table 5: Personal protective equipment to be worn in special environments

2.7 Protective devices

The following protective devices are fitted in the drive:

- Mechanical locking (padlock)
- Electrical locking (cam switch)

3 Product description

This chapter contains an overview of the design and function of the product.

3.1 Function description

The manual drive works by adjusting the operating position of off-circuit tap-changers in regulating transformers to the individual operating requirements.

The tap-change operation is initiated by actuating the manual drive. Once a tap-change operation is complete, the manual drive is forcibly locked. Another tap-change operation is only possible once the manual drive is manually unlocked.

3.2 Performance features

The manual drive is particularly characterized by the following properties:

- protective housing made from corrosion-resistant cast aluminum
- reduced design work thanks to common fastening and output geometry
- clear indication field which is easy to read
- modern terminal technology
- anti-condensation heater possible

3.3 Scope of delivery

The manual drive is packaged with protection against moisture and is delivered as follows:

- Manual drive
- Operating instructions
- Quick reference guide
- Unpacking instructions
- Connection diagrams

Please note the following:

1. Check the shipment for completeness on the basis of the shipping documents.
2. Store the parts in a dry place until installation.
3. The product must remain in its airtight, protective wrapping and may only be removed immediately before installation.

3.4 Attachment

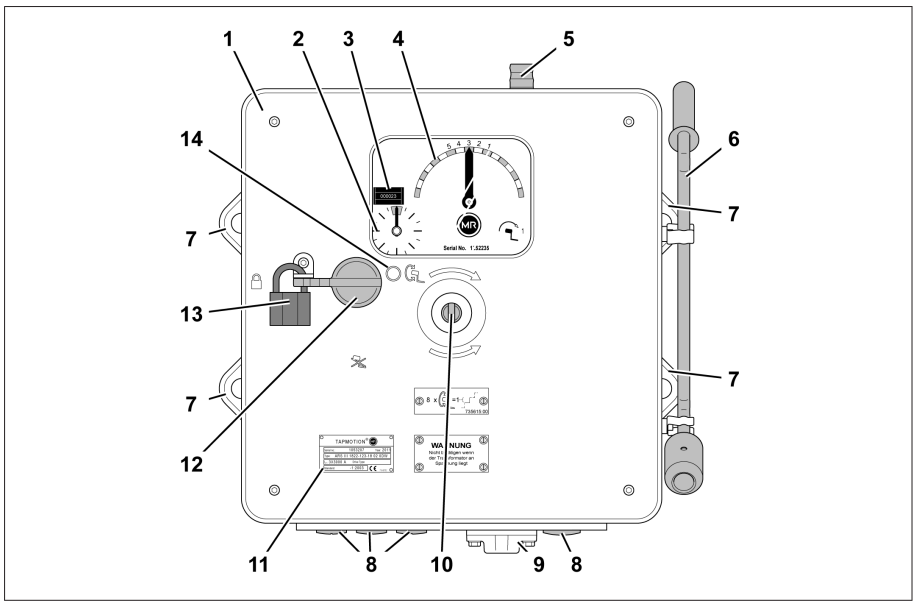

Figure 1: TAPMOTION® DD

1	Protective housing cover	8	Dummy plug for cable bushing
2	Tap-change indicator	9	Ventilation unit
3	Operations counter	10	Drive shaft
4	Tap position indicator	11	Name plate
5	Output shaft	12	Operating lever
6	Hand crank	13	Padlock
7	Fixing lug	14	End stop for operating lever

3.4.1 Name plate

The name plate can be found on the protective housing cover and contains the following information:

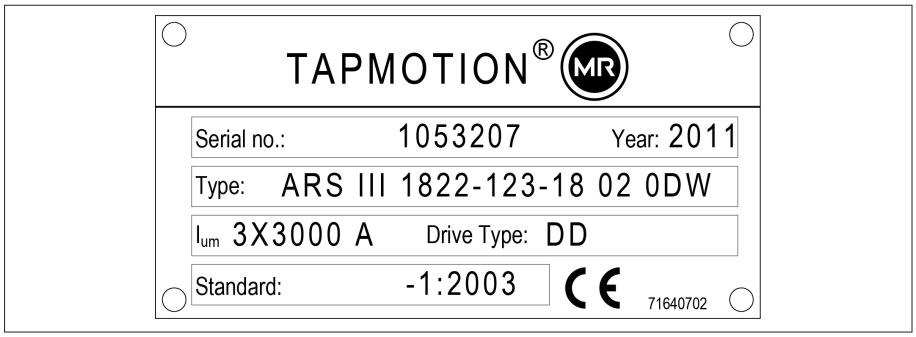

Figure 2: Name plate

4 Packaging, transport and storage

4.1 Packaging

4.1.1 Purpose

The packaging is designed to protect the packaged goods during transport, loading and unloading as well as periods of storage in such a way that no (detrimental) changes occur. The packaging must protect the goods against permitted transport stresses such as vibration, knocks and moisture (rain, snow, condensation).

The packaging also prevents the packaged goods from moving impermissibly within the packaging. The packaged goods must be prepared for shipment before actually being packed so that the goods can be transported safely, economically and in accordance with regulations.

4.1.2 Suitability

The packaging is suitable for

- all common types of transportation
- stackability - 1000 kg/m^2 top surface

The packaged goods are packed in a stable wooden crate. This crate ensures that the shipment is secure when in the intended transportation position and that none of its parts touch the loading surface of the means of transport or touch the ground after unloading.

The packaged goods are stabilized inside the crate to prevent impermissible changes in position.

The sealed packaging surrounds the packaged goods on all sides with a PE foil. The product is protected using desiccant. The PE foil is bonded after the drying agent is added and any remaining air is extracted. This can be seen on the form-fit of the PE foil.

4.1.3 Markings

The packaging bears a signature with instructions for safe transport and correct storage. The following symbols apply to the shipment (of non-hazardous goods). Adherence to these symbols is mandatory.

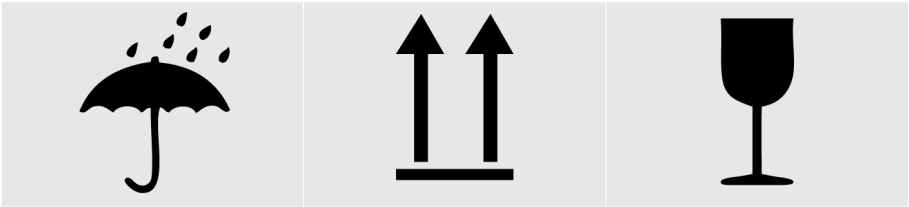

Protect against moisture	Top	Fragile

Table 6: Shipping pictograms

4.2 Transportation, receipt and handling of shipments

⚠ WARNING

Danger of death or severe injury!

Danger due to tipping or falling load!

- ► Only trained and appointed persons may select the sling gear and secure the load.
- ► Do not walk under the hanging load.
- ► Use means of transport and lifting gear with a carrying capacity of > 500 kg.

NOTICE

Damage to property!

Damage to property due to falling and tipping over!

- ► Only trained and appointed persons may select the sling gear and secure the load.
- ► Do not walk under the hanging load.
- ► Use means of transport and lifting gear with a carrying capacity of > 500 kg.

In addition to oscillation stress and shock stress, jolts must also be expected during transportation. In order to prevent possible damage, avoid dropping, tipping, knocking over and colliding with the product.

If a box falls from a certain height (e.g. when slings tear) or experiences an unbroken fall, damage must be expected regardless of the weight.

Every delivered shipment must be checked for the following by the recipient before acceptance (acknowledgment of receipt):

- Completeness based on the delivery slip
- External damage of any type.

The checks must take place after unloading when the crate or transport container can be accessed from all sides.

Visible damage

If external transport damage is detected on receipt of the shipment, proceed as follows:

- Immediately record the transport damage found in the shipping documents and have this countersigned by the carrier.
- In the event of severe damage, total loss or high damage costs, immediately notify the sales department at Maschinenfabrik Reinhausen and the relevant insurance company.
- After identifying damage, do not modify the condition of the shipment further and retain the packaging material until an inspection decision has been made by the transport company or the insurance company.

- Record the details of the damage immediately onsite together with the carrier involved. This is essential for any claim for damages!
- If possible, photograph damage to packaging and packaged goods. This also applies to signs of corrosion on the packaged goods due to moisture inside the packaging (rain, snow, condensation).
- Be absolutely sure to also check the sealed packaging.

NOTICE **Damage to packaged goods!**

Damage to packaged goods due to damaged sealed packaging!

► If the sealed packaging is damaged, do not under any circumstances install or commission the packaged goods.

- State the damaged parts.

Hidden damage

When damages are not determined until unpacking after receipt of the shipment (hidden damage), proceed as follows:

- Make the party responsible for the damage liable as soon as possible by telephone and in writing, and prepare a damage report.
- Observe the time periods applicable to such actions in the respective country. Inquire about these in good time.

With hidden damage, it is very hard to make the transportation company (or other responsible party) liable. Any insurance claims for such damages can only be successful if relevant provisions are expressly included in the insurance terms and conditions.

4.3 Storage of shipments

Packaged goods with a functional sealed packaging can be stored outdoors when the following conditions are complied with.

Selection and arrangement of the storage location should meet the following requirements:

- Stored goods are protected against moisture (flooding, water from melting snow and ice), dirt, pests such as rats, mice, termites and so on, and against unauthorized access.
- Store the crates on timber beams and planks as a protection against rising damp and for better ventilation.
- Carrying capacity of the substrate under the goods is sufficient.
- Entrance and exit paths are kept free.

Check stored goods at regular intervals. Also take appropriate action after storms, heavy rain or snow and so on.

Protect the packaging foil from direct sunlight so that it does not disintegrate under the influence of UV rays, which would cause the packaging to lose its sealing function.

If installation of the product is delayed beyond the normal time frame, suitable measures must be taken without delay. The following measures can be used:

- Correctly regenerate the drying agent and restore the sealed packaging.
- Unpack the packed goods and store in suitable storage space (well ventilated, as dust-free as possible, humidity < 50 % where possible).

4.4 Unpacking shipments and checking for transportation damages

NOTICE

Damage to property!

Damage to property due to ineffectively sealed packaging in locations with an unsuitable climate!

► Leave the product in its sealed packaging until installation.

► Do not open the sealed packaging until just before installation.

- Wherever possible keep the crate packaged for transport to the place where installation will take place.
- When unpacking, check the condition of the packaged goods.
- Check completeness based on the delivery slip.

5 Drying transformer

5.1 Drying transformer in autoclave

Observe the following information when drying the transformer in a autoclave.

NOTICE

Damage to drive and on-load tap-changer/off-circuit tap-changer!

If the drive is dried in an autoclave, the drive and on-load tap-changer/off-circuit tap-changer may be damaged.

► Do not dry drive in an autoclave.

5.2 Drying transformer in its own tank

If you dry the transformer in its own tank, the drive can remain attached to the transformer during drying.

6 Fitting manual drive on transformer

6.1 Fitting manual drive on transformer

NOTICE

Damage to drive!

Damage to drive resulting from assembly errors!

- ► Secure drive to the transformer tank without warping or deforming.
- ► Fit the drive vertically so that its output shaft is correctly aligned with the vertical shaft of the bevel gear.

1. Fit [► 32] 4 stud bolts (not supplied by MR) to transformer tank. The stud bolts must be aligned with the center line of the drive shaft, so that correct dimension V1 is achieved.

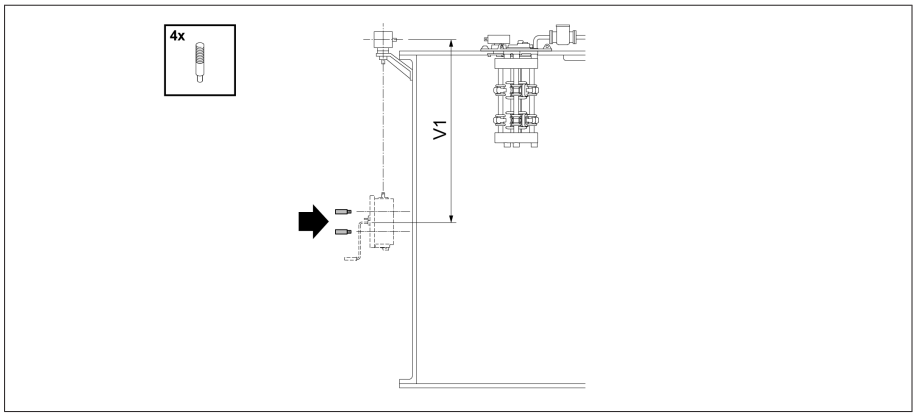

Figure 3: Stud bolt

2. Fit drive vertically to transformer tank

The assembly holes for this purpose are on the outside of the protective housing's mounting straps.

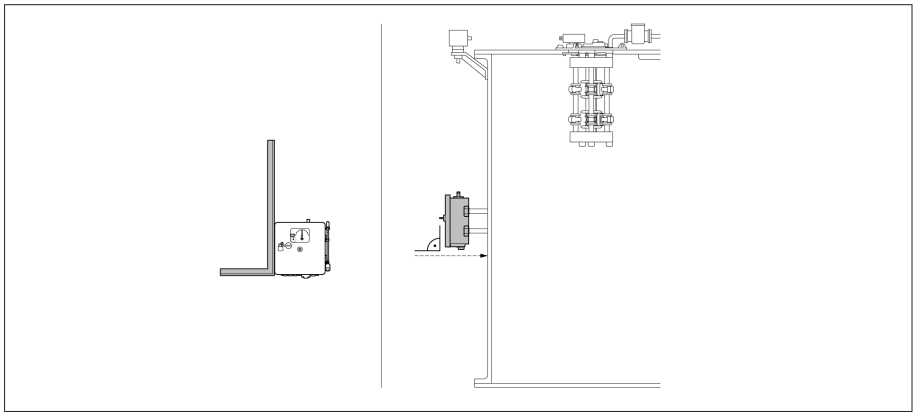

Figure 4: Fitting drive

3. Secure drive.

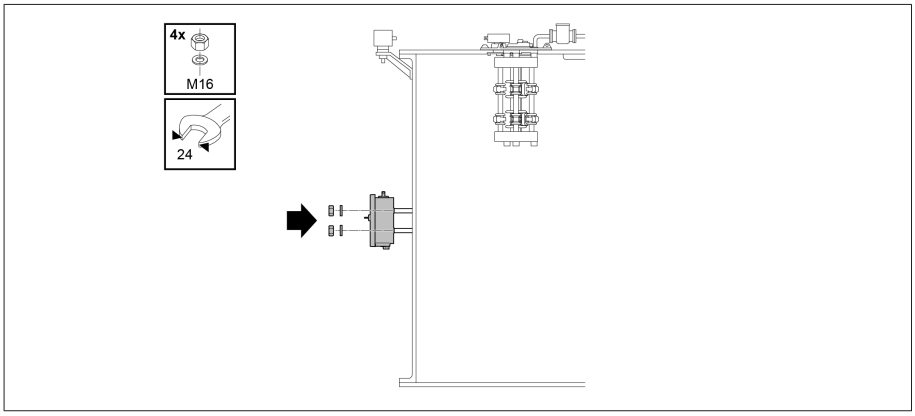

Figure 5: Securing drive

4. Connect the grounding screw of the motor-drive unit to the transformer tank.

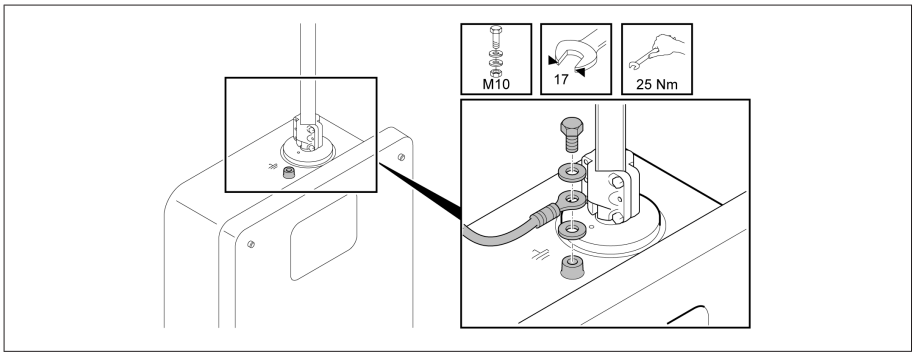

Figure 6: Grounding screw

5. Connect main grounding conductor to grounding conductor terminal on terminal bar X1 (minimum connection cross-section 2.5 mm²).

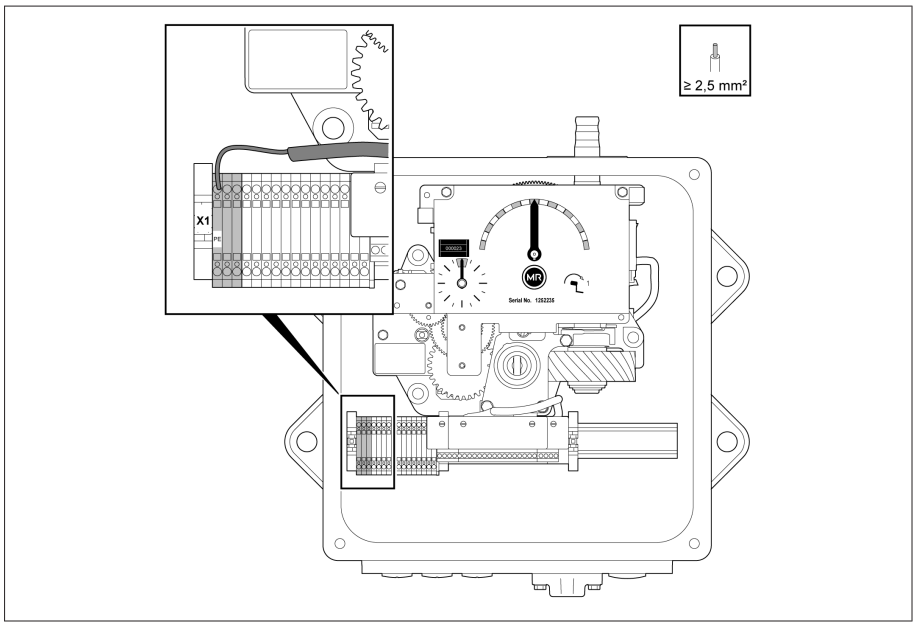

Figure 7: Main grounding conductor

6.2 Mounting drive shafts and bevel gear

The process of mounting the drive shafts and bevel gear is described in the operating instructions for the drive shafts.

6.3 Coupling off-circuit tap-changer with manual drive

The operating instructions for the off-circuit tap-changer describe how to couple the off-circuit tap-changer and manual drive.

⚠ WARNING

Danger of death or severe injury!

If the manual drive and off-circuit tap-changer are not coupled in the adjustment position, there is a risk of death or severe injury!

► Only couple manual drive and off-circuit tap-changer when in adjustment position. The adjustment position is indicated in the connection diagram of the off-circuit tap-changer included in delivery.

NOTICE

Damage to manual drive and off-circuit tap-changer!

If the manual drive and off-circuit tap-changer are not coupled in the adjustment position, there is a risk of damage to the manual drive and off-circuit tap-changer!

► Only couple manual drive and off-circuit tap-changer when in adjustment position. The adjustment position is indicated in the connection diagram of the off-circuit tap-changer included in delivery.

6.4 Connecting manual drive to tap-change supervisory control

The tap-change supervisory control is built onto the off-circuit tap-changer head in a housing (see operating instructions for DEETAP® DU).

To connect the manual drive to the tap-change supervisory control, proceed as follows:

1. Ensure that the manual drive and off-circuit tap-changer are in the adjustment position.
2. Remove terminal box cover of tap-change supervisory control by loosening the 8 hexagonal socket screws.
3. Connect manual drive to tap-change supervisory control.
4. Close terminal box cover with 8 hexagonal socket screws (tightening torque 6 Nm).

7 Performing function tests

After the manual drive is attached and coupled, perform function tests to ensure the correct function of the manual drive and off-circuit tap-changer.

⚠ WARNING

Danger of death or severe injury!

An energized transformer could cause death or serious injuries during a tap-change operation!

► Ensure that the transformer is switched off on the high and low voltage sides before performing a tap-change operation.

NOTICE

Damage to the off-circuit tap-changer!

Operating the off-circuit tap-changer without oil will cause damage to the off-circuit tap-changer!

► Fill transformer completely with new mineral insulating oil before operating the off-circuit tap-changer.

1. Fill transformer completely with new mineral insulating oil for transformers as per IEC 60296 (Specification for unused mineral insulating oils for transformers and switchgear).
2. Ensure that the manual drive and off-circuit tap-changer are in the adjustment position.
3. If present, unlock locking magnets (Y1) before the tap-change operation by applying the corresponding voltage (depending on version 110...125 V DC, 220 V DC, 95...140 V AC or 230 V AC).
4. Undertake tap-change operation tests across entire range of settings. Ensure that manual drive and off-circuit tap-changer are in the same operating position after every tap-change operation.
5. Ensure correct function of tap-change supervisory control.

8 Transporting the transformer to the installation site

If you have to remove the motor-drive unit to transport the transformer, proceed as follows:

1. Ensure that the drive and the on-load tap-changer/off-circuit tap-changer are in the adjustment position.
2. Remove the drive.
3. Do not actuate the drive while the on-load tap-changer/off-circuit tap-changer is not coupled.
4. Do not actuate an on-load tap-changer/off-circuit tap-changer which is not coupled.
5. Transport the drive to the installation site in the MR delivery packaging.
6. Fit drive to transformer at the operating site.

9 Commissioning the transformer at the operating site

The drive may only be connected to circuits with an external isolating device with all poles disconnected so the equipment can be fully de-energized if required (service, maintenance etc.).

Suitable equipment includes isolating devices in accordance with IEC 60947-1 and IEC60947-3 (e.g. non-automatic circuit-breaker). When stating the circuit breaker type, note the properties of the relevant circuits (voltage, maximum currents). The following should also be noted during installation:

- It must be easy for the operator to access the isolating device
- The isolating device must be labeled for the motor-drive unit and circuits to be isolated
- The isolating device must not be part of the power line
- The isolating device must not interrupt the main grounding conductor

Unless otherwise specified, the connections for the supply current circuits must have a conductor cross-section of at least 1.5 mm^2.

The drive may also only be connected to circuits which are shown in the connection diagram.

Before you commission the transformer at the operating site, you have to connect cam switch S48 to the tripping circuit of the transformer's circuit breakers. This will ensure that the transformer is switched off on the high and low voltage sides when the manual drive is actuated. The transformer can also only be started up again once a tap-change operation has been fully completed and the manual drive and off-circuit tap-changer are in the same operating position.

Proceed as follows to connect cam switch S48:

1. Open protective housing cover of manual drive.
2. Connect cam switch S48 to tripping circuit of transformer's circuit breaker.

Cam switch S48 can be designed as a normally closed contact or a normally open contact.

3. Close protective housing cover of manual drive.
4. If present, unlock locking magnets (Y1) before the tap-change operation by applying the corresponding voltage (depending on version 110...125 V DC, 220 V DC, 95...140 V AC or 230 V AC).
5. Perform test tap-change operation to trigger the circuit breakers.

Once this work is complete, you can commission the transformer.

10 Carrying out tap-change operation

Before you undertake a tap-change operation, you need to switch off and lock the transformer to prevent it switching back on.

Proceed as follows:

1. Switch off transformer on high and low voltage side.
2. Lock transformer to prevent unintentional restart.
3. Make sure everything is de-energized.
4. Visibly connect all transformer terminals to ground (grounding leads, grounding disconnectors) and short circuit them.
5. Cover or cordon off adjacent energized parts.

Once you have switched off and locked the transformer, you can perform tap-change operations.

10.1 Carrying out tap-change operation

⚠ WARNING

Danger of death or severe injury!

An energized transformer could cause death or serious injuries during a tap-change operation!

► Ensure that the transformer is switched off on the high and low voltage sides before performing a tap-change operation.

► Ensure that cam switch S48 has been connected to the tripping circuit of the transformer's circuit breakers.

1. If present, unlock locking magnets (Y1) before the tap-change operation by applying the corresponding voltage (depending on version 110...125 V DC, 220 V DC, 95...140 V AC or 230 V AC).
2. Remove the padlock.
   ⇨ The operating lever now moves 90° counter-clockwise into the neutral position.

If requested by the customer, an electrical signal can be issued in this position by cam switch S49 to indicate that the padlock was removed.

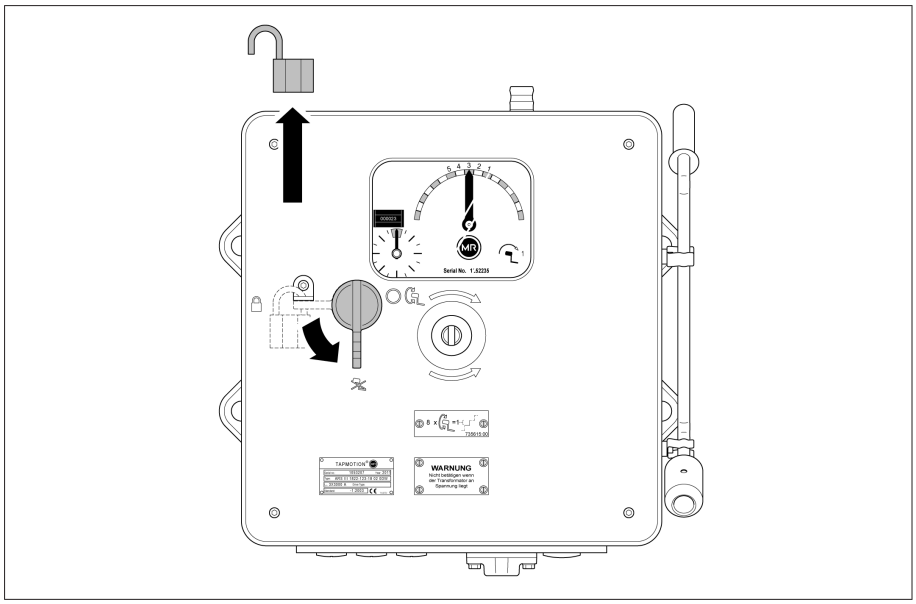

Figure 8: Operating lever in neutral position

3. Turn the operating lever by a further 90° counter-clockwise to the limit stop and into the switching position.

   ⇨ The operating lever engages and the manual drive is unlocked for the tap-change operation.

The circuit breaker of the transformer is actuated by cam switch S48 as soon as the operating lever is moved counter-clockwise from the neutral position.

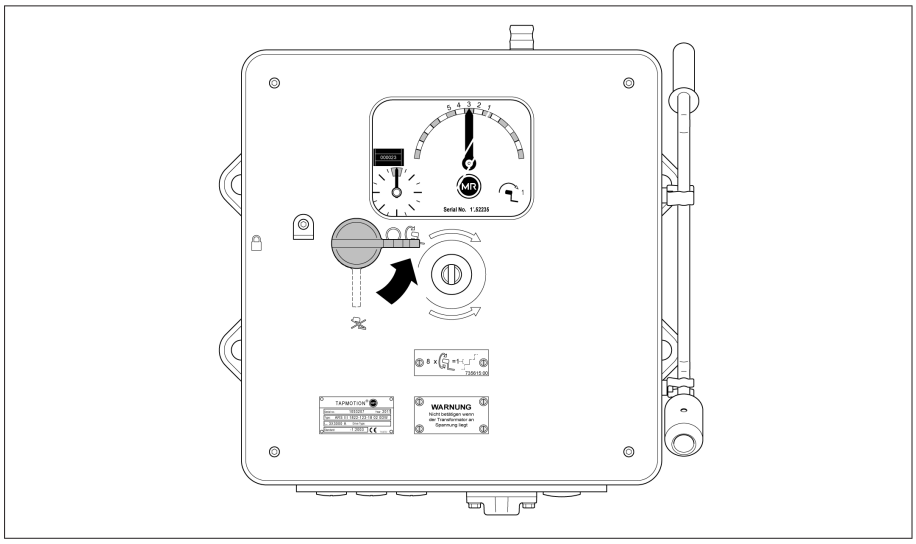

Figure 9: Operating lever in switching position

4. Pull hand crank off spring clips and place on drive shaft.

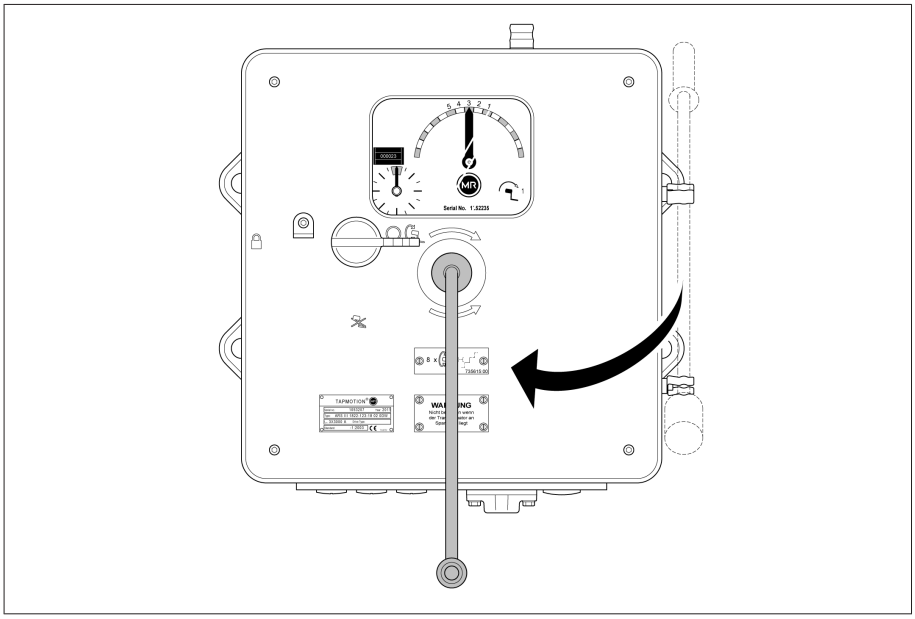

Figure 10: Hand crank

NOTICE

Damage to manual drive!

Damage to manual drive due to incorrect operation!

- ► Do not hold onto operating lever during the tap-change operation.
- ► Do not turn operating lever into starting position during tap-change operation.

5. Turn the hand crank 8 times. During the tap-change operation the operating lever moves downwards by a few degrees.
   - ⇨ After 8 hand crank revolutions the off-circuit tap-changer is switched one operating position further, the automatic locking mechanism engages, and the operating lever returns to the neutral position.

A tap-change operation is only complete once the tap-change indicator faces upwards to the black shaded area, the tap position indicator displays the next operating position and the operating lever is in the neutral position.

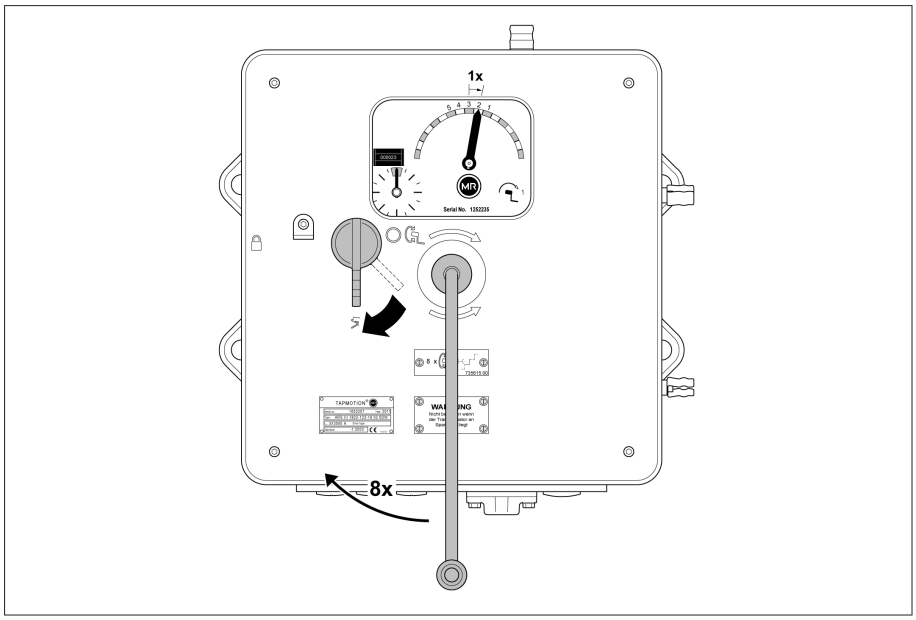

Figure 11: Tap-change operation

6. Either again turn the operating lever into the switching position to perform another tap-change operation or turn the operating lever to the starting position and lock with a padlock.
7. Pull hand crank off drive shaft and fasten to spring clips.
8. Before commissioning the transformer, ensure that the manual drive and off-circuit tap-changer are in the same operating position.

11 Technical data

11.1 Technical data for TAPMOTION® DD

NOTICE

Damage to manual drive!

Damage to manual drive due to incorrect cable types!

► If the manual drive is used at temperatures > 60 °C, you must use special cables which are designed for the relevant temperature.

Protective housing	for outdoor design, protection IP 55
Gearing	Transmission gear for hand crank operation, ratio 2:1 and auxiliary gear for the tap position indicator and blocking of drive mechanism
Maximum transferable torque	approx. 90 Nm on the output shaft with approx. 200 N applied to the hand crank handle
Number of operating positions	Maximum 17
Rotations of the hand crank per tap-change operation	8
Tap position indicator	Position-indication disk behind inspection window
Tap-change indicator	Display behind inspection window
Safety devices	**Mechanical locking** Padlock, release needed for every tap-change operation (enforced latch) **Electrical locking** Cam switch, switched over when unlocked by the operating lever Switching capacity: 24...250 V = 100 W AC/DC **Electro-mechanical lock (optional)** Locking magnet; the locking magnet (Y1) must be unlocked before the tap-change operation by applying the corresponding voltage (depending on version 110...125 V DC, 220 V DC, 95...140 V AC or 230 V AC).
Housing dimensions	420x434x199 mm (WxHxD)
Weight	About 25 kg

Temperature range	–45 °C…+70 °C

Table 7: Technical data

11.2 Technical data for position transmitter equipment

Resistance-type position transmitter module

Standard resistance: 10.0 Ω (0.6 W, +/-1 %) per tap position

The number of desired operating positions determines the number of loaded resistors.

The decisive power loss of the position transmitter module is 0.6 W because in the worst-case scenario only one resistor is energized. The supply voltage should not exceed DC 220 V. If your setup is more demanding, please contact Maschinenfabrik Reinhausen.

Position transmitter module with N/O contact range (break-before-make contact)

AC: 250 V, 0.5 A (resistive loading)

DC: 220 V, 0.2 A (resistive loading)

Minimum voltage level for signal and data processing: 24 V

Position transmitter module with N/O contact range, (make-before-break-type)

AC, DC: 250 V, 0.02 A (resistive loading)

AC, DC: 24 V, 0.20 A (resistive loading)

Minimum voltage level for signal and data processing: 24 V

Position transmitter module with N/O contact range, 10 A (make-before-break-type) for controlling current matching transformer in industrial applications.

AC, DC: 250 V, 10 A (resistive loading)

Position transmitter module, diode matrix

DC: 220 V, 0.2 A (resistive loading)

Minimum voltage level for signal and data processing: 24 V

12 Appendix

12.1 Manual drive TAPMOTION® DD, standard design, dimensional drawing (736530)

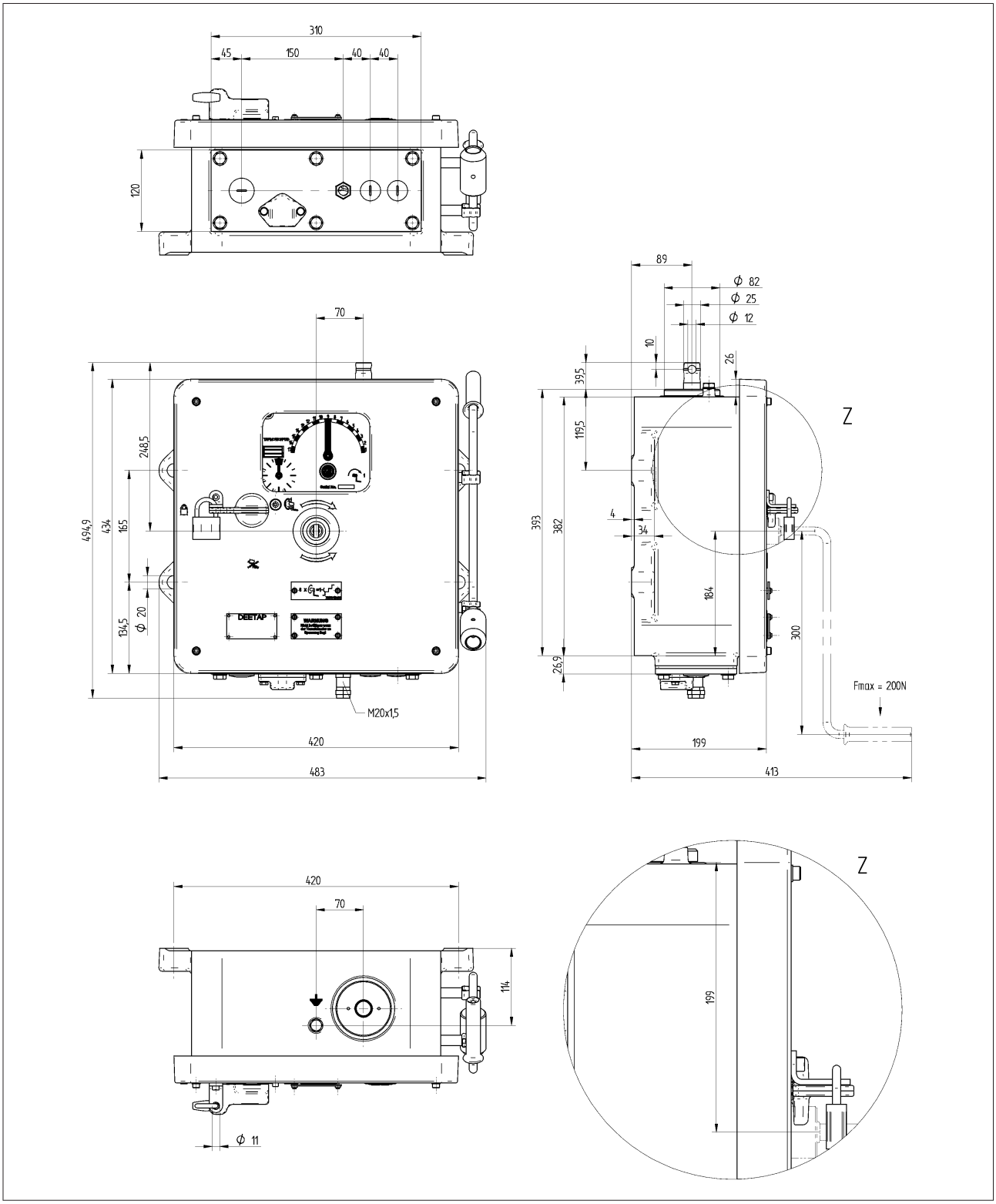

MR worldwide

Australia
Reinhausen Australia Pty. Ltd.
17/20-22 St Albans Road
Kingsgrove NSW 2208
Phone: +61 2 9502 2202
Fax: +61 2 9502 2224
E-Mail: sales@au.reinhausen.com

Brazil
MR do Brasil Indústria Mecánica Ltda.
Av. Elias Yazbek, 465
CEP: 06803-000
Embu - São Paulo
Phone: +55 11 4785 2150
Fax: +55 11 4785 2185
E-Mail: vendas@reinhausen.com.br

Canada
Reinhausen Canada Inc.
3755, rue Java, Suite 180
Brossard, Québec J4Y 0E4
Phone: +1 514 370 5377
Fax: +1 450 659 3092
E-Mail: m.foata@ca.reinhausen.com

India
Easun-MR Tap Changers Ltd.
612, CTH Road
Tiruninravur, Chennai 602 024
Phone: +91 44 26300883
Fax: +91 44 26390881
E-Mail: easunmr@vsnl.com

Indonesia
Pt. Reinhausen Indonesia
German Center, Suite 6310,
Jl. Kapt. Subijanto Dj.
BSD City, Tangerang
Phone: +62 21 5315-3183
Fax: +62 21 5315-3184
E-Mail: c.haering@id.reinhausen.com

Iran
Iran Transfo After Sales Services Co.
Zanjan, Industrial Township No. 1 (Aliabad)
Corner of Morad Str.
Postal Code 4533144551
E-Mail: itass@iran-transfo.com

Italy
Reinhausen Italia S.r.l.
Via Alserio, 16
20159 Milano
Phone: +39 02 6943471
Fax: +39 02 69434766
E-Mail: sales@it.reinhausen.com

Japan
MR Japan Corporation
German Industry Park
1-18-2 Hakusan, Midori-ku
Yokohama 226-0006
Phone: +81 45 929 5728
Fax: +81 45 929 5741

Luxembourg
Reinhausen Luxembourg S.A.
72, Rue de Prés
L-7333 Steinsel
Phone: +352 27 3347 1
Fax: +352 27 3347 99
E-Mail: sales@lu.reinhausen.com

Malaysia
Reinhausen Asia-Pacific Sdn. Bhd
Level 11 Chulan Tower
No. 3 Jalan Conlay
50450 Kuala Lumpur
Phone: +60 3 2142 6481
Fax: +60 3 2142 6422
E-Mail: mr_rap@my.reinhausen.com

P.R.C. (China)
MR China Ltd. (MRT)
开德贸易（上海）有限公司
中国上海浦东新区浦东南路 360 号
新上海国际大厦 4 楼 E 座
邮编： 200120
电话：＋86 21 61634588
传真：＋86 21 61634582
邮箱：mr-sales@cn.reinhausen.com
mr-service@cn.reinhausen.com

Russian Federation
OOO MR
Naberezhnaya Akademika Tupoleva
15, Bld. 2 ("Tupolev Plaza")
105005 Moscow
Phone: +7 495 980 89 67
Fax: +7 495 980 89 67
E-Mail: mrr@reinhausen.ru

South Africa
Reinhausen South Africa (Pty) Ltd.
No. 15, Third Street, Booysens Reserve
Johannesburg
Phone: +27 11 8352077
Fax: +27 11 8353806
E-Mail: support@za.reinhausen.com

South Korea
Reinhausen Korea Ltd.
21st floor, Standard Chartered Bank Bldg.,
47, Chongro, Chongro-gu,
Seoul 110-702
Phone: +82 2 767 4909
Fax: +82 2 736 0049
E-Mail: you-mi.jang@kr.reinhausen.com

U.S.A.
Reinhausen Manufacturing Inc.
2549 North 9th Avenue
Humboldt, TN 38343
Phone: +1 731 784 7681
Fax: +1 731 784 7682
E-Mail: sales@reinhausen.com

United Arab Emirates
Reinhausen Middle East FZE
Dubai Airport Freezone, Building Phase 6
3rd floor, Office No. 6EB, 341 Dubai
Phone: +971 4 2368 451
Fax: +971 4 2368 225
Email: service@ae.reinhausen.com

Maschinenfabrik Reinhausen GmbH
Falkensteinstrasse 8
93059 Regensburg

+49 (0)941 4090-0
+49(0)941 4090-7001
sales@reinhausen.com

www.reinhausen.com

1914122/03 EN ▪ 06/13 ▪ F0191102