Analog Tap Position Indicator

Operating Instructions

2220061/03 EN . Resistance Current Assessment

The original operating instructions were written in German.

Table of contents

1 Introduction

This technical file contains detailed descriptions on the safe and proper installation, connection, commissioning and monitoring of the product.

It also includes safety instructions and general information about the product.

This technical file is intended solely for specially trained and authorized personnel.

1.1 Validity

This technical document applies to the analog tap position indicator for assessing resistance current.

1.2 Manufacturer

The product is manufactured by:

Maschinenfabrik Reinhausen GmbH

Falkensteinstraße 8
93059 Regensburg, Germany
Tel.: (+49) 9 41/40 90-0
Fax: (+49) 9 41/40 90-7001
E-mail: sales@reinhausen.com

Further information on the product and copies of this technical file are available from this address if required.

1.3 Subject to change without notice

The information contained in this technical file comprises the technical specifications approved at the time of printing. Significant modifications will be included in a new edition of the technical file.

The document number and version number of this technical file are shown in the footer.

1.4 Completeness

This technical file is incomplete without the supporting documentation.

1.5 Supporting documents

The following documents also apply in addition to this technical file:

- Dimensional drawings

Also observe generally valid legislation, standards, and guidelines as well as specifications on accident prevention and environmental protection in the respective country of use.

1.6 Safekeeping

This technical file and all supporting documents must be kept ready at hand and accessible for future use at all times.

1.7 Notation conventions

This section contains an overview of the symbols and textual emphasis used.

1.7.1 Hazard communication system

Warnings in this technical file are displayed as follows.

1.7.1.1 Warning relating to section

Warnings relating to sections refer to entire chapters or sections, sub-sections or several paragraphs within this technical file. Warnings relating to sections use the following format:

⚠ WARNING **Type and source of danger**

Consequences

- ► Action
- ► Action

1.7.1.2 Embedded warning information

Embedded warnings refer to a particular part within a section. These warnings apply to smaller units of information than the warnings relating to sections. Embedded warnings use the following format:

⚠ DANGER! Instruction for avoiding a dangerous situation.

1.7.1.3 Signal words and pictograms

The following signal words are used:

Signal word	Meaning
DANGER	Indicates a hazardous situation which, if not avoided, will result in death or serious injury.
WARNING	Indicates a hazardous situation which, if not avoided, could result in death or serious injury.

Signal word	Meaning
CAUTION	Indicates a hazardous situation which, if not avoided, could result in injury.
NOTICE	Indicates measures to be taken to prevent damage to property.

Table 1: Signal words in warning notices

Pictograms warn of dangers:

Pictogram	Meaning
	Warning of a danger point
	Warning of dangerous electrical voltage
	Warning of combustible substances
	Warning of danger of tipping

Table 2: Pictograms used in warning notices

1.7.2 Information system

Information is designed to simplify and improve understanding of particular procedures. In this technical file it is laid out as follows:

Important information.

2 Safety

2.1 General safety information

The technical file contains detailed descriptions on the safe and proper installation, connection, commissioning and monitoring of the product.

- Read this technical file through carefully to familiarize yourself with the product.
- Particular attention should be paid to the information given in this chapter.

2.2 Appropriate use

The product and associated equipment and special tools supplied with it comply with the relevant legislation, regulations and standards, particularly health and safety requirements, applicable at the time of delivery.

If used as intended and in compliance with the specified requirements and conditions in this technical file as well as the warning notices in this technical file and attached to the product, then the product does not present any hazards to people, property or the environment. This applies throughout the product's entire life, from delivery through installation and operation to disassembly and disposal.

The operational quality assurance system ensures a consistently high quality standard, particularly in regard to the observance of health and safety requirements.

The following is considered appropriate use

- Only operate the product in accordance with this technical file and the agreed delivery conditions and technical data
- Use the equipment and special tools supplied solely for the intended purpose and in accordance with the specifications of this technical file
- Use the product only with the transformer specified in the order
- The serial numbers of on-load tap-changers and on-load tap-changer accessories (drive, drive shaft, bevel gear, protective relay etc.) must match if the on-load tap-changers and on-load tap-changer accessories are supplied as a set for one order.

2.3 Inappropriate use

Use is considered to be inappropriate if the product is used other than as described in the Appropriate use section. Please also note the following:

- Risk of explosion and fire from highly flammable or explosive gases, vapors, or dusts. Do not operate product in areas at risk of explosion.

- Unauthorized or inappropriate changes to the product may lead to personal injury, material damage, and operational faults. Only modify product following discussion with Maschinenfabrik Reinhausen GmbH.

2.4 Personnel qualification

The product is designed solely for use in electrical energy systems and facilities operated by appropriately trained staff. This staff comprises people who are familiar with the installation, assembly, commissioning and operation of such products.

2.5 Operator's duty of care

To prevent accidents, disruptions and damage as well as unacceptable adverse effects on the environment, those responsible for transport, installation, operation, maintenance and disposal of the product or parts of the product must ensure the following:

- All warning and hazard notices are complied with.
- Personnel are instructed regularly in all relevant aspects of operational safety, the operating instructions and particularly the safety instructions contained therein.
- Regulations and operating instructions for safe working as well as the relevant instructions for staff procedures in the case of accidents and fires are kept on hand at all times and are displayed in the workplace where applicable.
- The product is only used when in a sound operational condition and safety equipment in particular is checked regularly for operational reliability.
- Only replacement parts, lubricants and auxiliary materials which are authorized by the manufacturer are used.
- The specified operating conditions and requirements of the installation location are complied with.
- All necessary devices and personal protective equipment for the specific activity are made available.
- The prescribed maintenance intervals and the relevant regulations are complied with.
- Installation, electrical connection and commissioning of the product may only be carried out by qualified and trained personnel in accordance with this technical file.
- The operator must ensure appropriate use of the product.

2.6 Personal protective equipment

Personal protective equipment must be worn during work to minimize risks to health.

- Always wear the personal protective equipment required for the job at hand.

- Follow information about personal protective equipment provided in the work area.

Always wear	
	**Protective clothing** Close-fitting work clothing with a low breaking strength, with tight sleeves and with no protruding parts. It mainly serves to protect the wearer against being caught by moving machine parts. Do not wear any rings, necklaces or other jewelry.
	**Safety shoes** To protect against falling heavy objects and slipping on slippery surfaces.

Table 3: Personal protective equipment to be worn at all times

Wear the following in special environments	Special personal protective equipment is needed in special environments. The choice of equipment depends on the circumstances.
	**Safety glasses** To protect the eyes from flying parts and splashing liquids.
	**Hard hat** To protect from falling and flying parts and materials.
	**Hearing protection** To protect from hearing damage.

Table 4: Personal protective equipment to be worn in special environments

3 Product description

This chapter contains an overview of the design and function of the product.

3.1 Function description

The tap position indicator displays the current position of the motor-drive unit or tap changer in any location, usually in the control room.

For every motor-drive unit position, there is a button on the position transmitter board, which is approached by the slider. The buttons are connected with the position transmitter module (resistance type) via the position transmitter cable.

In the position transmitter module, a changed resistance value is given at the input of the tap position indicator depending on position.

The tap position indicator operates in a total resistance range of 60…2700 Ω.

3.1.1 Resistance-type position transmitter equipment

Resistance-type position transmitter equipment is needed in the motor-drive unit. The resistor contact series (10 Ω per step) must be produced according to the number of desired positions.

The resistance module is linked to the display instrument or to the mains device with bridge circuit via a signal line.

3.2 Scope of delivery

The product is packaged with protection against moisture and is delivered as follows:

- Analog tap position indicator for resistance current assessment
- Operating instructions

Please note the following:

- Check the shipment for completeness on the basis of the shipping documents.
- Store the parts in a dry place until installation
- The product must remain in its airtight, protective wrapping and may only be removed immediately before installation

3.3 Design

If using transformers whose transmission ratio is changed by tap changers with remote-controlled motor-drive units, the operating positions of the tap changer must be displayed in the control room.

The square tap position indicator is always equipped with an integrated mains device.

The rectangular tap position indicator is equipped with an extra mains device with bridge circuit.

The name plate is on the rear of the housing.

3.4 Connection

Before connecting ensure that the auxiliary voltage is in the range stated on the name plate.

3.4.1 Square tap position indicator

Standard connection

Connect device as shown in connection diagram provided on name plate. The numbers in the connection diagram correspond to the numbers on the terminals.

Terminals 1…3	Potentiometer teletransmitter
Terminals 4…7	Auxiliary voltage

A - Adjustment potentiometer for initial scale value

E - Adjustment potentiometer for final scale value

Extended setting range

To extend the setting range for the initial or final scale value, set potentiometer R_A or R_E:

- Extended setting range for start of scale (increase in zero point):
  - Balancing with potentiometer R_A
- Extended setting range for final scale value (suppression of final value):
  - Balancing with potentiometer R_E

3.4.2 Rectangular tap position indicator with separate measuring bridge

Standard connection

Connect device as shown in connection diagram provided on name plate. The numbers in the connection diagram correspond to the numbers on the terminals.

Terminals 1…3	Potentiometer teletransmitter

Terminals + and -	Switching position indicator
Terminals 4…7	Auxiliary voltage

A - Adjustment potentiometer for initial scale value

E - Adjustment potentiometer for final scale value

Extended setting range

To extend the setting range for the initial or final scale value, set potentiometer R_A or R_E:

- Extended setting range for start of scale (increase in zero point):
  - Balancing with potentiometer R_A
- Extended setting range for final scale value (suppression of final value):
  - Balancing with potentiometer R_E

4 Packaging, transport and storage

4.1 Packaging

4.1.1 Suitability, structure and production

The goods are packaged in a sturdy cardboard box. This ensures that the shipment is secure when in the intended transportation position and that none of its parts touch the loading surface of the means of transport or touch the ground after unloading.

The box is designed for a maximum load of 10 kg.

Inlays inside the box stabilize the goods, preventing impermissible changes of position, and protect them from vibration.

4.1.2 Markings

The packaging bears a signature with instructions for safe transport and correct storage. The following symbols apply to the shipment of non-hazardous goods. Adherence to these symbols is mandatory.

				
Protect against moisture	Top	Fragile	Attach lifting gear here	Center of mass

Table 5: Shipping pictograms

4.2 Transportation, receipt and handling of shipments

In addition to oscillation stress and shock stress, jolts must also be expected during transportation. In order to prevent possible damage, avoid dropping, tipping, knocking over and colliding with the product.

If a crate tips over, falls from a certain height (e.g. when slings tear) or experiences an unbroken fall, damage must be expected regardless of the weight.

Every delivered shipment must be checked for the following by the recipient before acceptance (acknowledgment of receipt):

- Completeness based on the delivery slip
- External damage of any type.

The checks must take place after unloading when the crate or transport container can be accessed from all sides.

Visible damage If external transport damage is detected on receipt of the shipment, proceed as follows:

- Immediately record the transport damage found in the shipping documents and have this countersigned by the carrier.
- In the event of severe damage, total loss or high damage costs, immediately notify the sales department at Maschinenfabrik Reinhausen and the relevant insurance company.
- After identifying damage, do not modify the condition of the shipment further and retain the packaging material until an inspection decision has been made by the transport company or the insurance company.
- Record the details of the damage immediately onsite together with the carrier involved. This is essential for any claim for damages!
- If possible, photograph damage to packaging and packaged goods. This also applies to signs of corrosion on the packaged goods due to moisture inside the packaging (rain, snow, condensation).
- Be absolutely sure to also check the sealed packaging.

Hidden damage When damages are not determined until unpacking after receipt of the shipment (hidden damage), proceed as follows:

- Make the party responsible for the damage liable as soon as possible by telephone and in writing, and prepare a damage report.
- Observe the time periods applicable to such actions in the respective country. Inquire about these in good time.

With hidden damage, it is very hard to make the transportation company (or other responsible party) liable. Any insurance claims for such damages can only be successful if relevant provisions are expressly included in the insurance terms and conditions.

4.3 Storage of shipments

When selecting and setting up the storage location, ensure the following:

- Protect stored goods against moisture (flooding, water from melting snow and ice), dirt, pests such as rats, mice, termites and so on, and against unauthorized access.
- Store the crates on timber beams and planks as a protection against rising damp and for better ventilation.
- Ensure sufficient carrying capacity of the ground.
- Keep entrance paths free.
- Check stored goods at regular intervals. Also take appropriate action after storms, heavy rain or snow and so on.

5 Fitting tap position indicator

The devices can be fitted using the tightening spindles provided.

1. Move plastic handle of bracket to the rear.
2. Slide tightening spindle into bracket from rear of device.
3. Swivel tightening spindle sideways.
   With a control panel thickness of 20 mm, swivel sideways into the 1st recess.
   With a control panel thickness of 20…40 mm, swivel sideways into the 2nd recess.
4. Fold in tightening spindle.
5. Slide device into control panel section.
6. Swivel tightening spindle out to locking point (90° to the device).
   ⇨ Tightening spindle engages.

Before tightening, turn tightening spindle slightly both ways to improve ease of movement.

7. Tighten tightening spindle by hand or with a small screwdriver.

If devices are fitted tightly, there is space between them for the tightening spindles because they are staggered diagonally.

The mains device is intended for top hat rail attachment in accordance with IEC 60715.

6 Adjusting tap position indicator

6.1 Square tap position indicator

There are 2 balancing resistors on the rear of the device for setting and adjustment. These resistors set the initial and final scale values respectively.

1. Check connection.
2. Remove cover caps for adjustment potentiometers E and A on rear of device.
3. Apply auxiliary voltage.
4. Move motor-drive unit into minimum switching position with potentiometer teletransmitter.

In the potentiometer teletransmitter's minimum position, if the pointer is not at minimum deflection, but maximum deflection or vice versa, the potentiometer teletransmitter connecting leads 2 and 3 are the wrong way round. If this happens, switch off the device and swap them over.

5. Balance pointer of switching indicator to initial scale value with potentiometer A.
6. Move motor-drive unit into maximum switching position with potentiometer teletransmitter.
7. Balance pointer of switching indicator to final scale value with potentiometer E.
8. Repeat steps, readjust pointer deflections for initial and final scale values.
9. Refit cover caps for adjustment potentiometer.

6.2 Rectangular tap position indicator with separate measuring bridge

There are 2 balancing resistors on the front of the device for setting and adjustment. These resistors set the initial and final scale values respectively.

1. Check connection.
2. Remove cover caps for adjustment potentiometers E and A on front of measuring bridge.
3. Apply auxiliary voltage.
4. Move motor-drive unit into minimum switching position with potentiometer teletransmitter.

In the potentiometer teletransmitter's minimum position, if the pointer is not at minimum deflection, but maximum deflection or vice versa, the potentiometer teletransmitter connecting leads 2 and 3 are the wrong way round. If this happens, switch off the device and swap them over.

5. Balance pointer of switching indicator to initial scale value with potentiometer A.
6. Move motor-drive unit into maximum switching position with potentiometer teletransmitter.
7. Balance pointer of switching indicator to final scale value with potentiometer E.
8. Repeat steps, readjust pointer deflections for initial and final scale values.
9. Refit cover caps for adjustment potentiometer.

7 Technical data

7.1 Regulations

DIN 43700	Devices for panel mounting, nominal and cut-out dimensions
DIN 43701	Electrical switchboard instruments
DIN 43718	Front frames and front panels
DIN 43802	Scales and pointers for electrical measuring instruments
DIN 16257	Nominal positions and position symbols used for measuring instruments
DIN 57410/VDE 0410	Safety requirements for indicating and writing measuring instruments and their accessories
DIN 60051	Direct acting indicating analogue electrical-measuring instruments and their accessories
DIN 0110	Instructions for measuring clearances and creepage distances of electrical equipment
DIN 0411	Protective measures for electronic devices
DIN 40050	Degrees of protection; protection against foreign bodies and water protection for electrical equipment
VDE/VDI 3540 Sheet 2	Reliability of measuring and control equipment (classification of climates for devices and accessories)

Table 6: Regulations

7.2 Mechanical data

Shape	Housing for installation in control panels, machine consoles or mosaic grid panels, stackable
Housing material	Polycarbonate, self-extinguishing and non-dripping in accordance with UL 94 V-0
Front panel	Sheet glass
Color of front frame	Black (similar to RAL 9005)
Mounting position	Vertical ± 5°
Fastening	Tightening spindle
Mounting	Tight-fitting mounting possible
Control panel thickness	≤ 40 mm
Connection	Hexagon bolt with M4 screw and clamping bracket
Wire cross-section	Maximum 2.5 mm²
Dimensions of display	

Square front frame with bridge circuit	72 x 72 mm 96 x 96 mm 144 x 144 mm Installation depth of 120 mm in each case
Rectangular front frame	96 x 48 mm Installation depth 107 mm 144 x 72 mm Installation depth 192 mm
Control panel section	68 x 68 mm 92 x 92 mm 138 x 138 mm 92 x 45 mm 138 x 68 mm
Dimensions of mains part with bridge circuit	45 x 73 x 119 mm
Drawings	897897, 898105, 898106

Table 7: Mechanical data

7.3 Electrical data

Measured variable	Direct current
Overload limit in accordance with DIN EN 60051	
Continuous	1.2 times
Maximum 5 s	10 times
Protection class	II
Degree of protection	IP 20
Insulation group	A in accordance with VDE 0110
Rated insulation voltage	1000 V
Test voltage	3 kV at 50 Hz, test lasting 1 minute in acc. with DIN 57410
Supply voltage	9.6…15 V DC, 20…29 V DC, 43…54 V DC 51…70 V DC, 93…132 V DC, 190…235 V DC 98…126 A DC, 195…253 A DC, 340…440 A DC

Table 8: Electrical data

7.4 Accuracy under nominal conditions

Accuracy class	1.5 in accordance with DIN EN 60051
Nominal conditions	
Ambient temperature	23 °C ± 1 K
Mounting position	Nominal mounting position ± 1°
Input variable	Nominal measuring range
Other	DIN EN 60651
Influencing variables	Ambient temperature -10 °C…+55 °C

Mounting position	Nominal mounting position ± 5°
External magnetic field	0.5 mT

Table 9: Accuracy under nominal conditions

7.5 Ambient conditions

Climate suitability	Climate class 3 in accordance with VDE/VDI 3540
Operating temperature range	-10 °C – +55 °C
Storage temperature range	-25 °C – +65 °C
Relative humidity	≤ 75 % annual average, no condensation
Shock resistance	15 g, 11 ms
Shake resistance	2.5 g, 5…55 Hz

Table 10: Ambient conditions

8 Appendix

8.1 Connection diagram for tap position indicator with square front frame (897897)

A□	B□	C
96	90	104
144	136	104

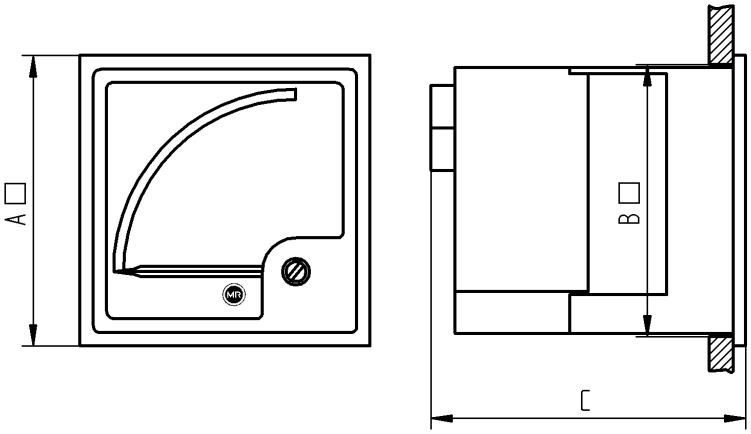

Anschlußschaltbild für Anzeigeinstrumente

Connection diagram for indicating instruments

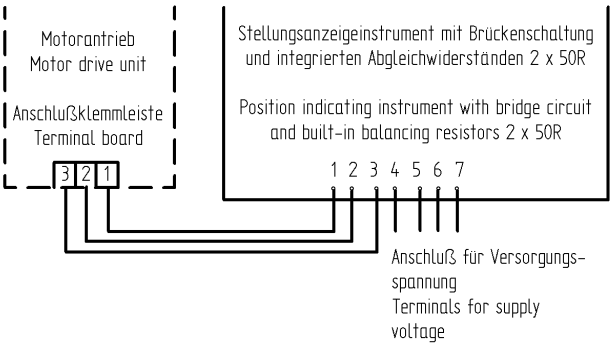

Versorgungsspannungen Supply voltages	Klemmen Terminals	MR – Materialnummer MR-item no.
9,6...15 VDC	(–) 4-5 (+)	96 x 96 = 097218: 144 x 144 = 097221:
20...29 VDC	(–) 4-6 (+)	
43...54 VDC	(–) 4-7 (+)	
51...70 VDC	(–) 4-5 (+)	96 x 96 = 097219: 144 x 144 = 097222:
93...132 VDC	(–) 4-6 (+)	
190...235 VDC	(–) 4-7 (+)	
98...126 VAC	4-5	96 x 96 = 097220: 144 x 144 = 097223:
195...253 VAC	4-6	
340...440 VAC	4-7	

8.2 Connection diagram for tap position indicator with rectangular front frame (898105)

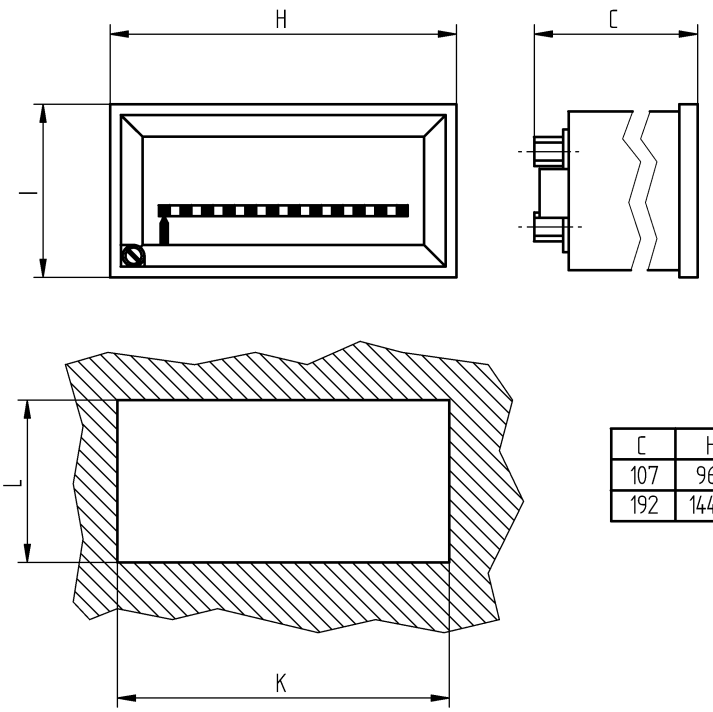

C	H x I	K x L
107	96 x 48	92 x 45
192	144 x 72	138 x 68

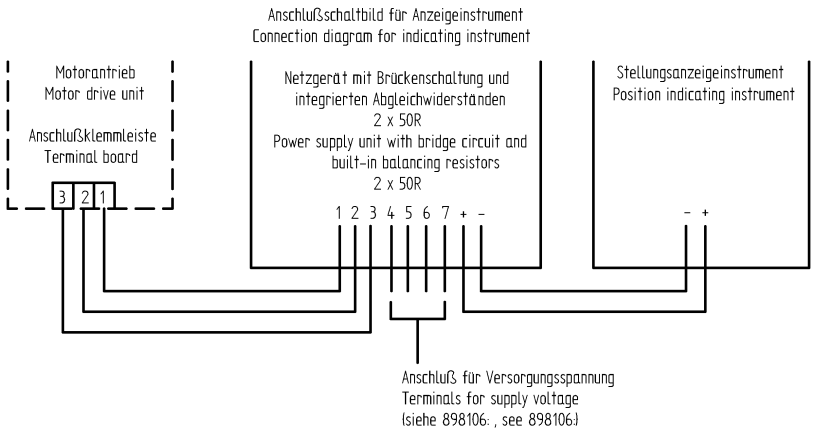

8.3 Dimensional drawing for mains device with bridge circuit (898106)

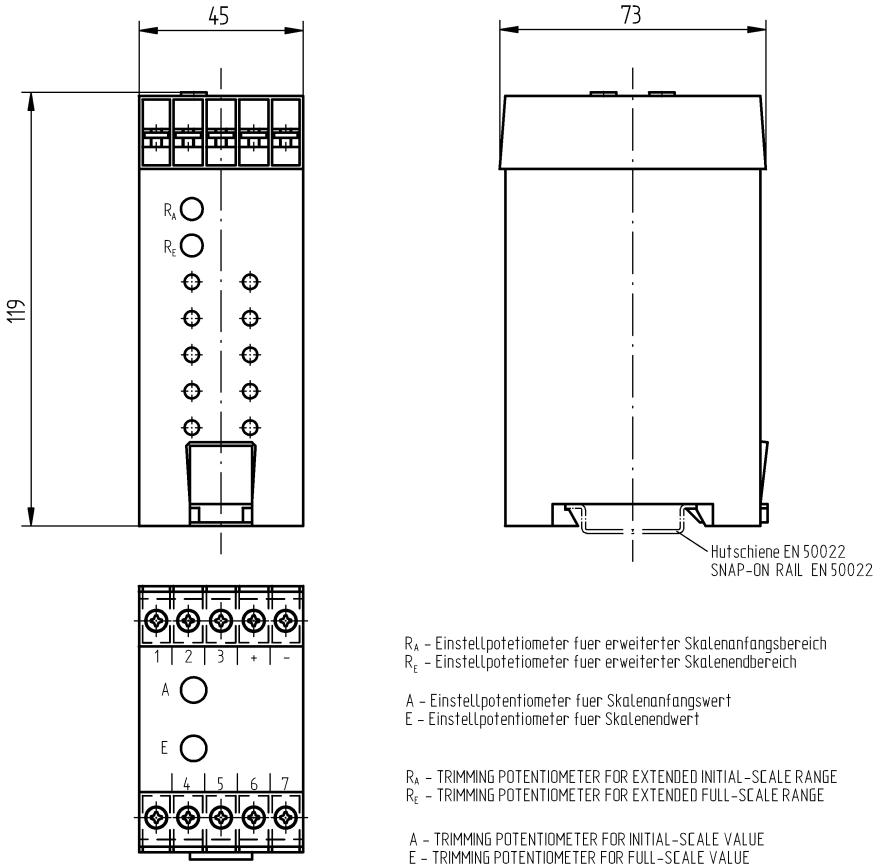

Versorgungsspannungen SUPPLY VOLTAGES	Klemmen TERMINALS	MR-Sach-Nr. MR-ITEM NO.
9,6 ... 15 VDC	(-) 4 - 5 (+)	097 224
20 ... 29 VDC	(-) 4 - 6 (+)	
43 ... 54 VDC	(-) 4 - 7 (+)	
51 ... 70 VDC	(-) 4 - 5 (+)	097 225
93 ... 132 VDC	(-) 4 - 6 (+)	
190 ... 235 VDC	(-) 4 - 7 (+)	
98 ... 126 VAC	4 - 5	097 226
195 ... 253 VAC	4 - 6	
340 ... 440 VAC	4 - 7	

MR worldwide

Australia
Reinhausen Australia Pty. Ltd.
17/20-22 St Albans Road
Kingsgrove NSW 2208
Phone: +61 2 9502 2202
Fax: +61 2 9502 2224
E-Mail: sales@au.reinhausen.com

Brazil
MR do Brasil Indústria Mecánica Ltda.
Av. Elias Yazbek, 465
CEP: 06803-000
Embu - São Paulo
Phone: +55 11 4785 2150
Fax: +55 11 4785 2185
E-Mail: vendas@reinhausen.com.br

Canada
Reinhausen Canada Inc.
3755, rue Java, Suite 180
Brossard, Québec J4Y 0E4
Phone: +1 514 370 5377
Fax: +1 450 659 3092
E-Mail: m.foata@ca.reinhausen.com

India
Easun-MR Tap Changers Ltd.
612, CTH Road
Tiruninravur, Chennai 602 024
Phone: +91 44 26300883
Fax: +91 44 26390881
E-Mail: easunmr@vsnl.com

Indonesia
Pt. Reinhausen Indonesia
German Center, Suite 6310,
Jl. Kapt. Subijanto Dj.
BSD City, Tangerang
Phone: +62 21 5315-3183
Fax: +62 21 5315-3184
E-Mail: c.haering@id.reinhausen.com

Iran
Iran Transfo After Sales Services Co.
Zanjan, Industrial Township No. 1 (Aliabad)
Corner of Morad Str.
Postal Code 4533144551
E-Mail: itass@iran-transfo.com

Italy
Reinhausen Italia S.r.l.
Via Alserio, 16
20159 Milano
Phone: +39 02 6943471
Fax: +39 02 69434766
E-Mail: sales@it.reinhausen.com

Japan
MR Japan Corporation
German Industry Park
1-18-2 Hakusan, Midori-ku
Yokohama 226-0006
Phone: +81 45 929 5728
Fax: +81 45 929 5741

Luxembourg
Reinhausen Luxembourg S.A.
72, Rue de Prés
L-7333 Steinsel
Phone: +352 27 3347 1
Fax: +352 27 3347 99
E-Mail: sales@lu.reinhausen.com

Malaysia
Reinhausen Asia-Pacific Sdn. Bhd
Level 11 Chulan Tower
No. 3 Jalan Conlay
50450 Kuala Lumpur
Phone: +60 3 2142 6481
Fax: +60 3 2142 6422
E-Mail: mr_rap@my.reinhausen.com

P.R.C. (China)
MR China Ltd. (MRT)
开德贸易（上海）有限公司
中国上海浦东新区浦东南路 360 号
新上海国际大厦 4 楼 E 座
邮编： 200120
电话：＋86 21 61634588
传真：＋86 21 61634582
邮箱：mr-sales@cn.reinhausen.com
mr-service@cn.reinhausen.com

Russian Federation
OOO MR
Naberezhnaya Akademika Tupoleva
15, Bld. 2 ("Tupolev Plaza")
105005 Moscow
Phone: +7 495 980 89 67
Fax: +7 495 980 89 67
E-Mail: mrr@reinhausen.ru

South Africa
Reinhausen South Africa (Pty) Ltd.
No. 15, Third Street, Booysens Reserve
Johannesburg
Phone: +27 11 8352077
Fax: +27 11 8353806
E-Mail: support@za.reinhausen.com

South Korea
Reinhausen Korea Ltd.
21st floor, Standard Chartered Bank Bldg.,
47, Chongro, Chongro-gu,
Seoul 110-702
Phone: +82 2 767 4909
Fax: +82 2 736 0049
E-Mail: you-mi.jang@kr.reinhausen.com

U.S.A.
Reinhausen Manufacturing Inc.
2549 North 9th Avenue
Humboldt, TN 38343
Phone: +1 731 784 7681
Fax: +1 731 784 7682
E-Mail: sales@reinhausen.com

United Arab Emirates
Reinhausen Middle East FZE
Dubai Airport Freezone, Building Phase 6
3rd floor, Office No. 6EB, 341 Dubai
Phone: +971 4 2368 451
Fax: +971 4 2368 225
Email: service@ae.reinhausen.com

Maschinenfabrik Reinhausen GmbH
Falkensteinstrasse 8
93059 Regensburg

+49 (0)941 4090-0
+49(0)941 4090-7001
sales@reinhausen.com

www.reinhausen.com

2220061/03 EN ▪ 07/14 ▪