Advanced Retard Switch COMTAP® ARS

Operating Instructions

4434052/01 EN

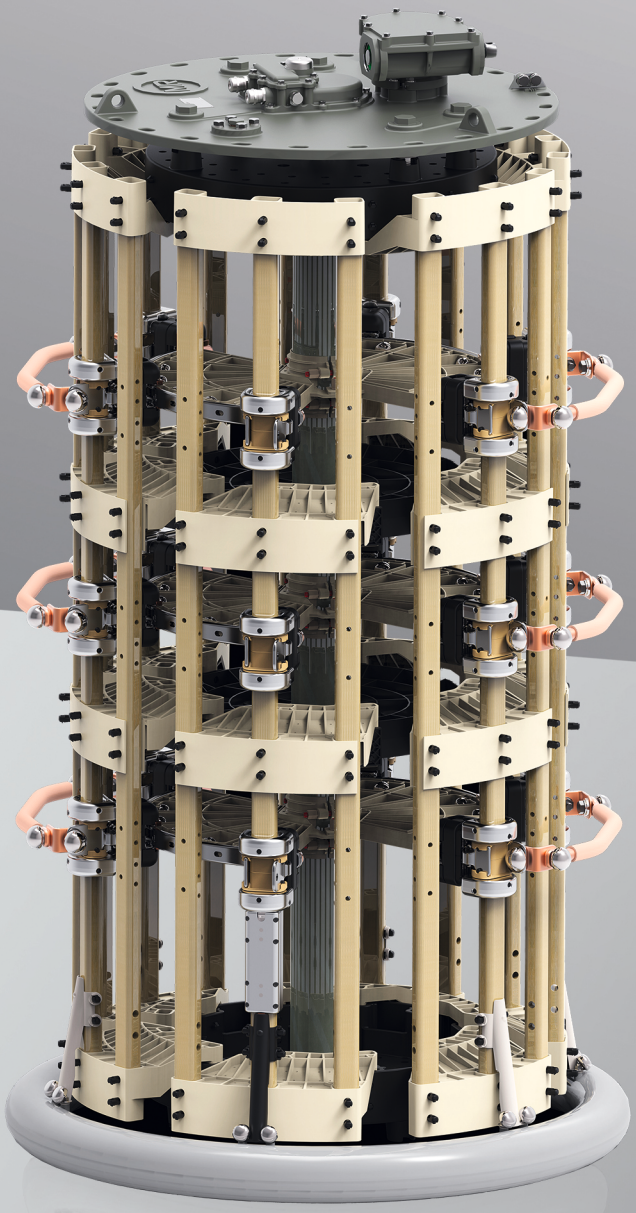

The original operating instructions were written in German.

Table of contents

1 Introduction ... 5
1.1 Validity ... 5
1.2 Manufacturer ... 5
1.3 Completeness ... 5
1.4 Safekeeping ... 6
1.5 Notation conventions ... 6
1.5.1 Symbols ... 6
1.5.2 Hazard communication system ... 7
1.5.3 Information system ... 9

2 Safety ... 10
2.1 Appropriate use ... 10
2.2 Fundamental safety instructions ... 10
2.3 Personnel qualification ... 12
2.4 Personal protective equipment ... 13

3 Product description ... 15
3.1 Scope of delivery ... 15
3.2 COMTAP® ARS ... 15
3.2.1 Function description ... 15
3.2.2 Setup/models ... 16
3.2.3 Name plate ... 17
3.2.4 Protective devices ... 17
3.3 Drive shaft ... 17
3.3.1 Function description ... 17
3.3.2 Design/versions ... 18

4 Commissioning transformer at operating site ... 22
4.1 Checking motor-drive unit ... 22
4.2 Performing trial tap-change operations ... 23
4.3 Commissioning transformer ... 23

5 Operation ... 24
5.1 Temperature range ... 24
5.2 Switching COMTAP® ARS ... 24

5.3 Actuating motor-drive unit with hand crank 25
5.4 Monitoring during operation 26

6 Maintenance 27
6.1 Safety precautions 27
6.2 Maintenance 27

7 Fault elimination 29

8 Drawings 31
8.1 COMTAP® ARS, installation drawing (732771) 31
8.2 COMTAP® ARS, installation drawing bell-type tank design (733023) 32
8.3 COMTAP® ARS, position of supporting structure (supporter, 735714) 33
8.4 COMTAP® ARS, tap-change supervisory control (726977) 34
8.5 COMTAP® ARS, mounting flange (725857) 35
8.6 COMTAP® ARS, mounting flange made by the customer (742013) 36
8.7 COMTAP® ARS, tracing template (726728) 37
8.8 COMTAP® ARS, mounting of the COMTAP® ARS on the lower cage ring (user-specific, 732773_1) 38
8.9 COMTAP® ARS, mounting of the COMTAP® ARS on the lower cage ring (user-specific, 732773_2) 39
8.10 COMTAP® ARS, head with upper gear unit (725737) 40
8.11 COMTAP® ARS, connection contact (734095) 41
8.12 COMTAP® ARS, connecting leads (10015335) 42
8.13 COMTAP® ARS, horizontal drive shaft (limit dimensions, 778664_2) 43
8.14 COMTAP® ARS, swivel range of upper gear unit (732769_2) 44
8.15 COMTAP® ARS, supplementary drawings (734087) 45
8.16 Bevel gear CD 6400, dimensional drawing (892916) 46
8.17 Lifting traverse (72673703) 47

1 Introduction

This technical file contains detailed descriptions for monitoring during operation, troubleshooting, and maintenance.

It also includes safety instructions and general information about the product.

Information about installation can be found in the installation and commissioning instructions.

This technical file is intended solely for specially trained and authorized personnel.

1.1 Validity

The document supplied with the product is always the valid version. This technical file is configured for the specific order and applies to the following products, the serial numbers of which can be found on the delivery documents:

- Advanced Retard Switch COMTAP® ARS
- Drive shaft

1.2 Manufacturer

The product is manufactured by:

Maschinenfabrik Reinhausen GmbH

Falkensteinstraße 8
93059 Regensburg, Germany
Tel.: (+49) 9 41/40 90-0
Fax: (+49) 9 41/40 90-7001
E-mail: sales@reinhausen.com

Further information on the product and copies of this technical file are available from this address if required.

1.3 Completeness

This technical file is incomplete without the supporting documents.

The following documents apply:

- Unpacking instructions (included in the scope of delivery)
- Supplement (included in the scope of delivery)
- Routine test report (included in the scope of delivery)
- Connection diagrams (included in the scope of delivery)
- Dimensional drawings (included in the scope of delivery)

- Technical data - General section (available on request)
- Technical data - Product-specific section (available on request)

1.4 Safekeeping

Keep this technical file and all supporting documents ready at hand and accessible for future use at all times.

1.5 Notation conventions

This section contains an overview of the symbols and textual emphasis used.

1.5.1 Symbols

Symbol	Meaning
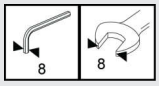	Wrench size
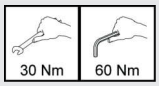	Tightening torque
	Number and type of fastening material used
	Fill with oil
	Cut open, cut through
	Clean
	Visual inspection
	Use your hand
	Adapter ring
	Apply a coat of paint
	Use a file

Symbol	Meaning
	Grease
	Coupling bolt
	Use a ruler
	Use a saw
	Hose clip
	Wire eyelet, safety wire
	Use a screwdriver
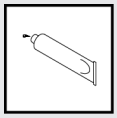	Apply adhesive
	Lock tab

Table 1: Symbols

1.5.2 Hazard communication system

Warnings in this technical file are displayed as follows.

1.5.2.1 Warning relating to section

Warnings relating to sections refer to entire chapters or sections, sub-sections or several paragraphs within this technical file. Warnings relating to sections use the following format:

⚠ WARNING

Type and source of danger

Consequences

► Action

► Action

1.5.2.2 Embedded warning information

Embedded warnings refer to a particular part within a section. These warnings apply to smaller units of information than the warnings relating to sections. Embedded warnings use the following format:

⚠ DANGER! Instruction for avoiding a dangerous situation.

1.5.2.3 Signal words and pictograms

The following signal words are used:

Signal word	Meaning
DANGER	Indicates a hazardous situation which, if not avoided, will result in death or serious injury.
WARNING	Indicates a hazardous situation which, if not avoided, could result in death or serious injury.
CAUTION	Indicates a hazardous situation which, if not avoided, could result in injury.
NOTICE	Indicates measures to be taken to prevent damage to property.

Table 2: Signal words in warning notices

Pictograms warn of dangers:

Pictogram	Meaning
	Warning of a danger point
	Warning of dangerous electrical voltage
	Warning of combustible substances
	Warning of danger of tipping

Table 3: Pictograms used in warning notices

1.5.3 Information system

Information is designed to simplify and improve understanding of particular procedures. In this technical file it is laid out as follows:

Important information.

2 Safety

This technical file contains detailed descriptions on the safe and proper installation, connection, commissioning and monitoring of the product.

- Read this technical file through carefully to familiarize yourself with the product.
- This technical file is part of the product.
- Read and observe the safety instructions provided in this chapter in particular.
- Observe the warnings in this technical file in order to avoid function-related dangers.
- The product is manufactured on the basis of state-of-the-art technology. Nevertheless, risks to life and limb of the user or impairment of the product and other material assets may occur during use due to function-related dangers.

2.1 Appropriate use

The product is an Advanced Retard Switch and is used to reverse the polarity of a winding when the transformer is in operation. The product is designed solely for use in electrical energy systems and facilities. If used as intended and in compliance with the requirements and conditions specified in this technical file as well as the warning notices in this technical file and attached to the product, then the product does not present any danger to people, property or the environment. This applies throughout the product's entire life, from delivery to installation and operation through to disassembly and disposal.

The following is considered appropriate use:

- Use the product only with the transformer specified in the order.
- The serial numbers of COMTAP® ARS and COMTAP® ARS accessories (motor-drive unit, drive shaft, bevel gear, protective relay etc.) must match if COMTAP® ARS and COMTAP® ARS accessories are supplied as a set for one order.
- You will find the applicable standard for the product and the year of issue on the nameplate.
- Operate the product only in accordance with this technical file, the agreed delivery conditions and technical data.
- Ensure that all necessary work is performed only by qualified personnel.
- Use the equipment and special tools supplied solely for the intended purpose and in accordance with the specifications of this technical file.

2.2 Fundamental safety instructions

To prevent accidents, disruptions and damage as well as unacceptable adverse effects on the environment, those responsible for transport, installation, operation, maintenance and disposal of the product or parts of the product must ensure the following:

Personal protective equipment

Loosely worn or unsuitable clothing increases the danger of becoming trapped or caught up in rotating parts and the danger of getting caught on protruding parts. This increases the danger to life and limb.

- All necessary devices and personal protective equipment required for the specific task, such as a hard hat, safety footwear, etc. must be worn. Observe the section "Personal protective equipment" [▶ 13].
- Never wear damaged personal protective equipment.
- Never wear rings, necklaces or other jewelry.
- If you have long hair, wear a hairnet.

Work area

Untidy and poorly lit work areas can lead to accidents.

- Keep the work area clean and tidy.
- Make sure that the work area is well lit.
- Observe the applicable laws for accident prevention in the relevant country.

Working during operation

You must only operate the product when it is in a sound operational condition. Otherwise it poses a danger to life and limb.

- Regularly check the operational reliability of safety equipment.
- Comply with the maintenance work and maintenance intervals described in this technical file.

Explosion protection

Highly flammable or explosive gases, vapors and dusts can cause serious explosions and fire.

- Do not install or operate the product in areas where a risk of explosion is present.

Safety markings

Warning signs and safety information plates are safety markings on the product. They are an important aspect of the safety concept.

- Observe all safety markings on the product.
- Make sure all safety markings on the product remain intact and legible.
- Replace safety markings that are damaged or missing.

Ambient conditions

To ensure reliable and safe operation, the product must only be operated under the ambient conditions specified in the technical data.

- Observe the specified operating conditions and requirements for the installation location.

Auxiliary materials and operating materials

Auxiliary materials and operating materials not approved by Maschinenfabrik Reinhausen GmbH could damage the product.

- Only use lubricants and auxiliary materials approved by the manufacturer.
- Contact Maschinenfabrik Reinhausen GmbH.

Modifications and conversions

Unauthorized or inappropriate changes to the product may lead to personal injury, material damage and operational faults.

- Only modify product following consultation with Maschinenfabrik Reinhausen GmbH.

Spare parts

Spare parts not approved by Maschinenfabrik Reinhausen GmbH may cause physical injury and damage the product.

- Only use spare parts approved by the manufacturer.
- Contact Maschinenfabrik Reinhausen GmbH.

2.3 Personnel qualification

The person responsible for assembly, commissioning, operation, maintenance and inspection must ensure that the personnel are sufficiently qualified.

Electrically skilled person

The electrically skilled person has a technical qualification and therefore has the required knowledge and experience, and is also conversant with the applicable standards and regulations. The electrically skilled person is also proficient in the following:

- Can identify potential dangers independently and is able to avoid them.
- Is able to perform work on electrical systems.
- Is specially trained for the working environment in which (s)he works.
- Must satisfy the requirements of the applicable statutory regulations for accident prevention.

Electrically trained persons

An electrically trained person receives instruction and guidance from an electrically skilled person in relation to the tasks undertaken and the potential dangers in the event of inappropriate handling as well as the protective devices and safety measures. The electrically trained person works exclusively under the guidance and supervision of an electrically skilled person.

Operator

The operator uses and operates the product in line with this technical file. The operating company provides the operator with instruction and training on the specific tasks and the associated potential dangers arising from improper handling.

Technical Service

We strongly recommend having maintenance, repairs and retrofitting carried out by our Technical Service department. This ensures that all work will be performed correctly. If maintenance is not carried out by our Technical Service department, please ensure that the personnel who carry out the maintenance are trained and authorized by Maschinenfabrik Reinhausen GmbH to carry out the work.

Authorized personnel

Authorized personnel are trained by Maschinenfabrik Reinhausen GmbH to carry out special maintenance.

2.4 Personal protective equipment

Personal protective equipment must be worn during work to minimize risks to health.

- Always wear the personal protective equipment required for the job at hand.
- Never wear damaged protective equipment.
- Follow information about personal protective equipment provided in the work area.

Always wear	
	**Protective clothing** Close-fitting work clothing with a low tearing strength, with tight sleeves and with no protruding parts. It mainly serves to protect the wearer against being caught by moving machine parts.

Always wear	
	**Safety shoes** To protect against falling heavy objects and slipping on slippery surfaces.

Table 4: Personal protective equipment to be worn at all times

Wear the following in special environments	Special personal protective equipment is needed in special environments. The choice of equipment depends on the circumstances.
	**Safety glasses** To protect the eyes from flying parts and splashing liquids.
	**Visor** To protect the face from flying parts and splashing liquids or other dangerous substances.
	**Hard hat** To protect from falling and flying parts and materials.
	**Hearing protection** To protect from hearing damage.
	**Protective gloves** For protection from mechanical, thermal, and electrical hazards.

Table 5: Personal protective equipment to be worn in special environments

3 Product description

This chapter contains an overview of the design and function of the product.

3.1 Scope of delivery

The product is packaged with protection against moisture and is delivered as follows:

- COMTAP® ARS
- TAPMOTION® ED motor-drive unit
- Drive shaft with coupling parts and bevel gear
- Technical files

Note the following information:

- Check the shipment for completeness on the basis of the shipping documents.
- Store the parts in a dry place until installation
- The product must remain in its airtight, protective wrapping and may only be removed immediately before installation

You will find more information in the "Packaging, transport, and storage" chapter.

3.2 COMTAP® ARS

3.2.1 Function description

The COMTAP® ARS C is used to reverse the polarity of a winding during transformer operation. During this process, the through-current is commutated from one current path to another current path with the same potential.

The COMTAP® ARS always has 2 operating positions.

The COMTAP® ARS is changed over from one operating position to the next by the TAPMOTION® ED motor-drive unit.

The COMTAP® ARS can be used for different applications in combination with an on-load tap-changer. The COMTAP® ARS is primarily used to reverse the polarity of the regulating voltage in applications with large regulating ranges (e.g. phase shifter transformers).

In on-load tap-changer applications with reversing change-over selector where the change-over selector capacity is outside the permitted range, a combination of on-load tap-changer without reversing change-over selector and COMTAP® ARS can be used.

3.2.2 Setup/models

The COMTAP® ARS is produced in a single-phase and three-phase design with a maximum possible rated through-current of 2400 A.

The design of the COMTAP® ARS and the designation of its main parts are shown in the installation drawings in the appendix (see page [► 31]).

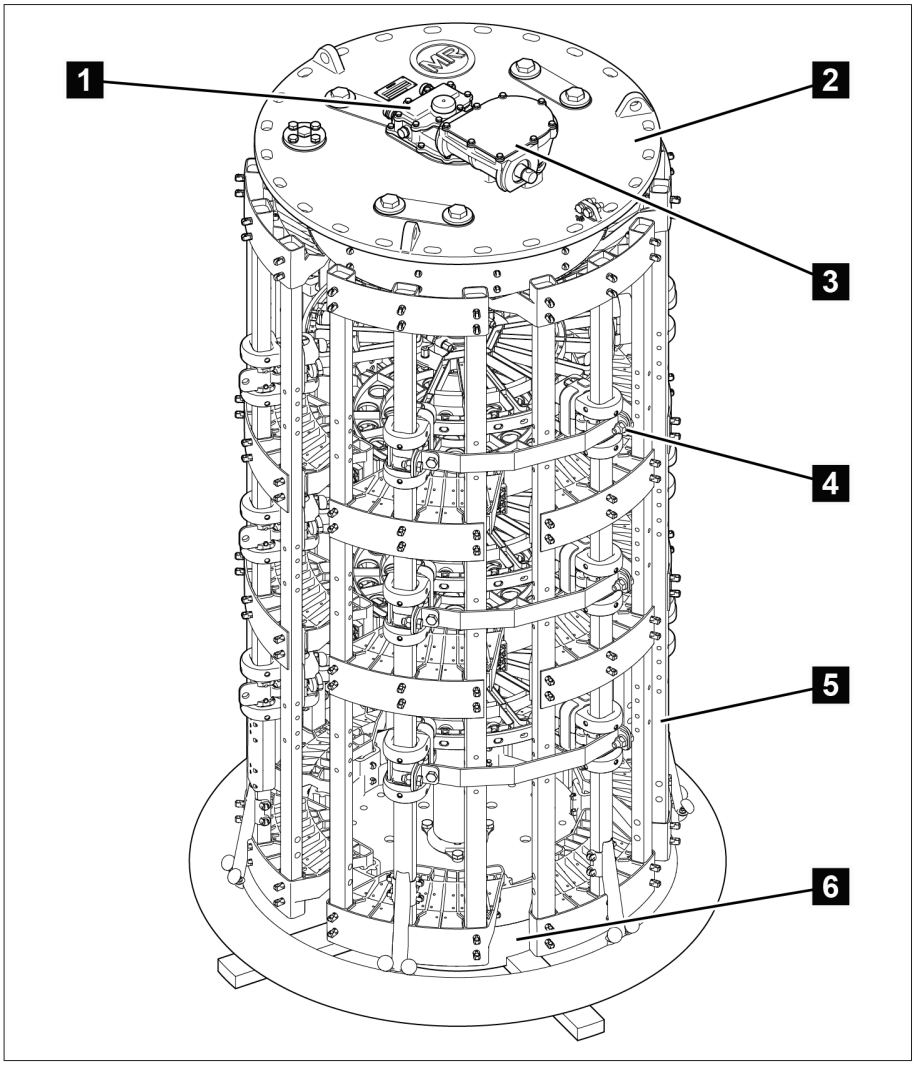

Figure 1: COMTAP® ARS

1	Tap-change supervisory control with inspection window for tap position indicator	2	COMTAP® ARS head
3	Upper gear unit	4	Connection contact
5	COMTAP® ARS cage	6	Set-down cylinder

3.2.3 Name plate

The name plate is on the head of the COMTAP® ARS.

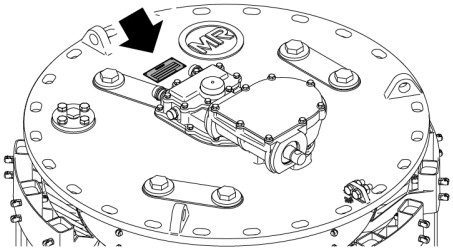

Figure 2: Position of name plate

3.2.4 Protective devices

Tap-change supervisory control

The COMTAP® ARS is equipped with a tap-change supervisory control, which is fitted in a housing on the head of the COMTAP® ARS (see page [▶ 34]).

Depending on the application, the tap-change supervisory control may have different safety functions in conjunction with the motor-drive unit and the associated on-load tap-changer units.

These safety functions are specified individually in a binding manner for each delivery depending on application and documented in an associated functional description.

Electrical tripping contact/interlocking contact

When combining the COMTAP® ARS with on-load tap-changers, the COMTAP® ARS may only be actuated in a certain on-load tap-changer position. This means that it may only be actuated when all windings of the on-load tap-changer tap winding are disconnected and the voltage at the relevant winding is therefore zero.

For this reason, non-permitted switching operations are prevented by a mutual electrical interlock of the on-load tap-changer and COMTAP® ARS.

Please refer to the order-specific technical documentation, safety instructions, and functional description.

3.3 Drive shaft

3.3.1 Function description

The drive shaft is the mechanical connection between motor-drive and on-load tap-changer head / de-energized tap-changer head.

The bevel gear changes the direction from vertical to horizontal (see drawing 892916).

Accordingly, the vertical drive shaft has to be mounted between drive and bevel gear and the horizontal drive shaft between bevel gear and on-load tap-changer or de-energized tap-changer.

3.3.2 Design/versions

The drive shaft consists of a square tube and is coupled at each end by two coupling brackets and one coupling bolt to the drive / driven shaft end of the device to be connected.

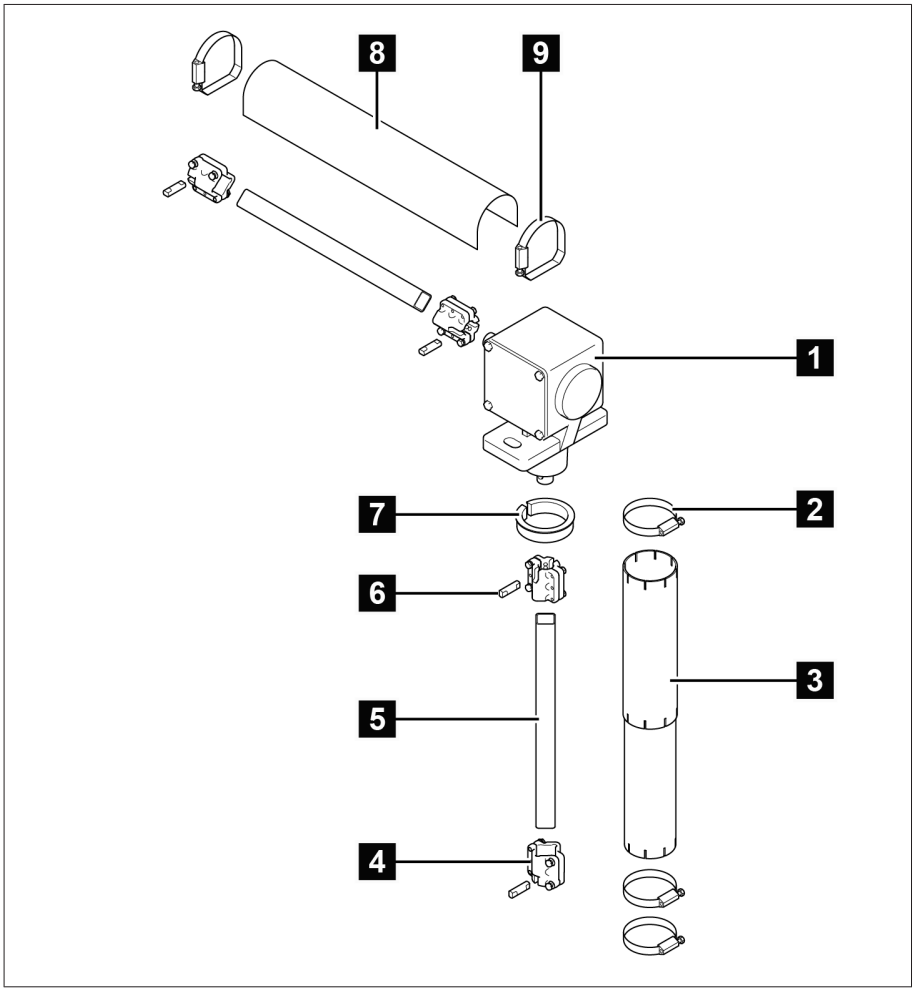

Figure 3: Components of the drive shaft

1	Bevel gear	2	Hose clip
3	Telescopic protective tube	4	Coupling bracket
5	Square tube	6	Coupling bolt
7	Adapter ring	8	Protective cover
9	Hose clip		

3.3.2.1 Drive shaft without cardan joint and without insulator

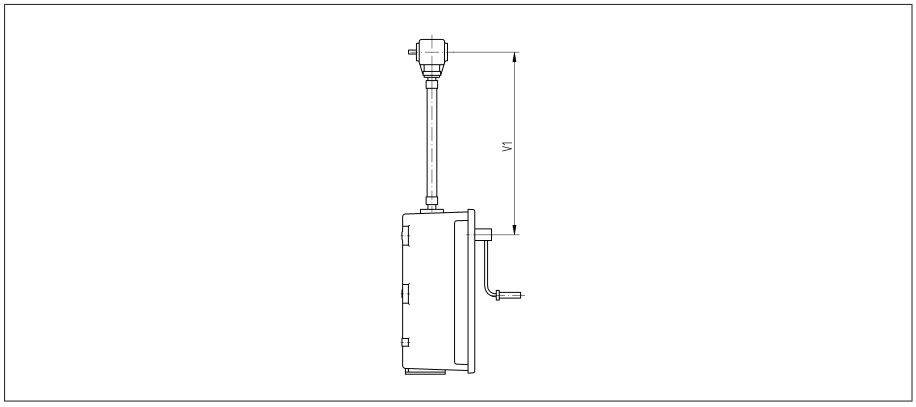

Figure 4: Drive shaft without cardan joint and without insulator (= normal model)

Configuration	V 1 min	Intermediate bearing
Middle of hand crank – middle of bevel gear (maximum permissible axial offset 2°)	536 mm	When the maximum value of 2472 mm is exceeded, it is necessary to use an intermediate bearing. V 1 ≤ 2472 mm (without intermediate bearing) V 1 > 2472 mm (with intermediate bearing)

3.3.2.2 Drive shaft without cardan joint and with insulator

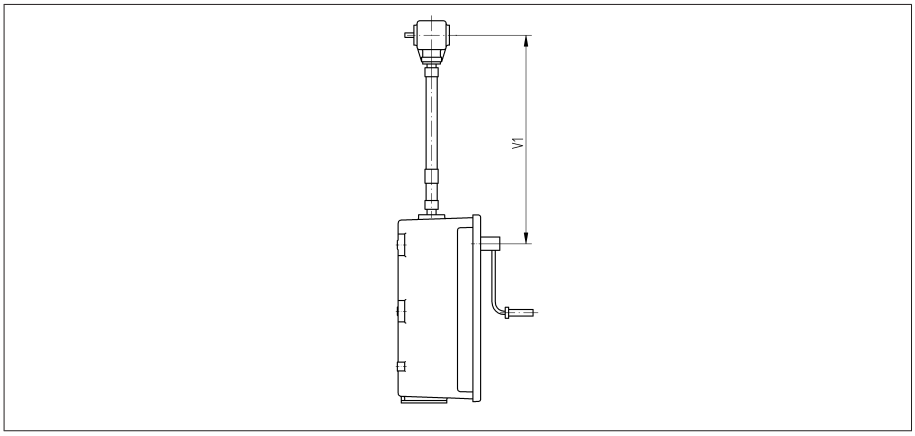

Figure 5: Drive shaft without cardan joint and with insulator (= special model)

Configuration	V 1 min	Intermediate bearing
Middle of hand crank – middle of bevel gear (maximum permissible axial offset 2°)	706 mm	When the maximum value of 2472 mm is exceeded, it is necessary to use an intermediate bearing. V 1 ≤ 2472 mm (without intermediate bearing) V 1 > 2472 mm (with intermediate bearing)

3.3.2.3 Drive shaft with cardan joint and without insulator

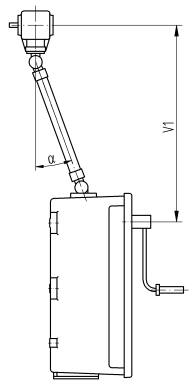

Figure 6: Drive shaft with cardan joint and without insulator (= special model)

Configuration	V 1 min [mm]	Intermediate bearing for [mm]
Middle of hand crank – middle of bevel gear (maximum permissible axial offset alpha = 20°)	798	V 1 > 2564

3.3.2.4 Drive shaft with cardan joint and with insulator

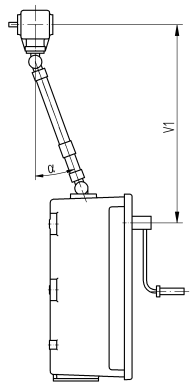

Figure 7: Drive shaft with cardan joint and with insulator (= special model)

Configuration	V 1 min [mm]	Intermediate bearing for [mm]
Middle of hand crank – middle of bevel gear (maximum permissible axial offset alpha = 20°)	978	V 1 > 2772

4 Commissioning transformer at operating site

4.1 Checking motor-drive unit

Before commissioning the transformer, repeat the function tests on the motor-drive unit as described in MR operating instructions for motor-drive unit.

⚠ WARNING

Danger of death or severe injury!

Danger of death or severe injury due to incorrect operation!

- ► Under no circumstances is the transformer to be commissioned if the functions specified in the section "Tests on motor-drive unit" are not satisfied.

NOTICE

Damage to the on-load tap-changer and motor-drive unit!

Damage to on-load tap-changer and motor-drive unit due to condensate in protective housing of motor-drive unit!

- ► Always keep protective housing of the motor-drive unit tightly closed.
- ► In the event of downtimes prior to initial commissioning of more than 8 weeks or operation interruptions of more than 2 weeks, connect and operate the anti-condensation heater in the motor-drive unit. If this is not possible (e.g. during transportation), place a sufficient amount of dehydrating agent in the protective housing.

NOTICE

Damage to the on-load tap-changer and motor-drive unit!

Damage to on-load tap-changer and motor-drive unit due to incorrect use of position transmitter equipment!

- ► Only circuits stated in the chapter Technical data for position transmitter equipment may be connected to the position transmitter module connections.
- ► The switchover point of the position transmitter equipment in the motor-drive unit is not the same as the switchover point of the diverter switch operation. This depends on the type of diverter switch. This fact should be noted when project planning the locking circuits between the motor-drive unit and external equipment (e.g. transformer circuit breaker).
- ► For external monitoring, locking, and control purposes, it is not therefore the position transmitter equipment but the "Tap changer in operation" position transit contact shown in the connection diagram that should be used.

4.2 Performing trial tap-change operations

Before energizing the transformer, test change operations must be carried out to check the mechanical function of the COMTAP® ARS.

1. **⚠ DANGER!** Switch off transformer on high and low-voltage side. Failure to do so may result in severe injuries and property damage.
2. Lock transformer to prevent unintentional restart.
3. Starting from the adjustment position, undertake tap change operation tests across the entire range of settings.
4. If necessary, repeat the transformer ratio test.
5. ***NOTICE!*** Make sure that in each operating position the tap position indicators of motor-drive unit and COMTAP® ARS read the same position. An incorrectly coupled motor-drive unit will damage the COMTAP® ARS.

4.3 Commissioning transformer

Proceed as follows to commission the transformer:

1. **⚠ DANGER!** Ensure that the transformer is switched off on the high-voltage and low-voltage sides. Failure to do so may result in severe injuries and property damage.
2. Connect the drive to the tripping circuit of the transformer's circuit breaker.
3. **⚠ DANGER!** Ensure that COMTAP® ARS and motor-drive unit are in the same operating position. Check that all safety measures are effective. Failure to do so will result in danger of death and damage to property when commissioning the transformer.
4. Commission the transformer.

5 Operation

The following sections describe how to operate the COMTAP® ARS and monitor the COMTAP® ARS and motor-drive unit.

5.1 Temperature range

When using a vegetable oil as insulating fluid, the permissible temperature range for operation of the DEETAP® DU/COMTAP® ARS is limited. Please observe the relevant information in the specific order documents and on the indicator plate on the drive.

You can operate the DEETAP® DU/COMTAP® ARS in the rated load range at oil temperatures of -25 °C to +105 °C and in accordance with IEC 60214-1 up to +115 °C (during emergency transformer operation in accordance with IEC 60076-7). Contact Maschinenfabrik Reinhausen GmbH if this temperature range is not sufficient for the requirements of your application.

5.2 Switching COMTAP® ARS

Proceed as follows to switch the COMTAP® ARS:

1. **⚠ DANGER!** When also using an on-load tap-changer, ensure that the mutual electrical interlocking of the on-load tap-changer and COMTAP® ARS is working properly and preventing impermissible tap-change operations. Ensure that all windings of the on-load tap-changer's tap winding are disconnected and that the voltage at the winding whose polarity is to be reversed is zero. Note technical files relating to order. Failure to do so will result in the risk of explosion!
2. Switch COMTAP® ARS with the help of the motor-drive unit.

5.3 Actuating motor-drive unit with hand crank

⚠ WARNING

Danger of explosion!

Unauthorized operation of the motor-drive unit with the hand crank may result in death or serious injury.

- ► Never operate the motor-drive unit electrically or with the hand crank before the transformer has been disconnected if you think there may be a fault in the transformer or on-load tap-changer / de-energized tap-changer.
- ► Never use the hand crank to complete a tap-change operation that has begun electrically, but has not been ended completely.
- ► If the hand crank is difficult to move, you must stop using it.
- ► When operating the motor-drive unit with the hand crank, never reverse the direction of rotation.
- ► If there is any doubt about the on-load tap-changer / de-energized tap-changer being in proper working condition or about the cause of a fault in the motor-drive unit, contact the Technical Service department of Maschinenfabrik Reinhausen GmbH immediately.
- ► To operate the motor-drive unit manually, only use the hand crank mounted in the motor-drive unit.

For information about fault rectification, refer to the "Troubleshooting" chapter.

Normal operation

During normal operation, there is no need to operate the unit with the hand crank. The hand crank is mainly required during installation or for tests in the transformer plant.

Use of the hand crank for operating the motor-drive unit is permitted if the transformer is disconnected, e.g. for maintenance tasks, if there is no detectable fault on the transformer or on-load tap-changer / de-energized tap-changer and the previous tap-change operation has been ended correctly.

Emergency operation exception

An operation is considered an emergency operation if a tap-change operation is absolutely necessary when a transformer is energized, despite a fault in the motor-drive unit. In this case, be sure to observe the warnings listed above.

Operating motor-drive unit with hand crank

To carry out a tap-change operation with the hand crank, proceed as follows:

1. Open door of protective housing of motor-drive unit.
2. Switch off motor protective switch Q1 (position 0).

3. Insert the hand crank mounted in the motor-drive unit into the hand crank aperture in the upper cover plate.
   ⇨ The built-in hand crank interlock switch interrupts the motor circuit at two poles. The control circuit will not be interrupted.
4. **NOTICE!** Turn in one direction with the hand crank until the pointer has fully circled the tap-change indicator once and is again in the mid-position of the area marked in gray on the tap-change indicator. Otherwise the tap-change operation is not completed correctly, which may result in damage to the on-load tap-changer and transformer.
   ⇨ The tap-change operation is complete.
5. Take off hand crank and return to bracket.
6. Switch on motor protective switch Q1 (position I).
7. Close door of protective housing of motor-drive unit.

5.4 Monitoring during operation

Monitoring of the COMTAP® ARS and motor-drive unit is limited to occasional visual inspections on the COMTAP® ARS head and motor-drive unit. For efficiency reasons these visual checks can be combined with the usual checks on the transformer.

Pay particular attention to the following:

- No oil leaks at the COMTAP® ARS head sealing points
- Gaskets of protective housing of motor-drive unit
- Correct functioning of the installed electrical heater in the protective housing of the motor-drive unit

The insulating oils in the transformer are to be monitored by the operator in accordance with the appropriate rules and regulations.

6 Maintenance

6.1 Safety precautions

⚠ WARNING

Danger of death and severe injury!

An energized transformer and energized COMTAP® ARS components could cause death or serious injuries during maintenance work!

► Adherence to the following safety precautions is mandatory.

1. Switch off transformer on high and low-voltage side.
2. Lock transformer to prevent unintentional restart.
3. Make sure everything is de-energized.
4. Visibly connect all transformer terminals to ground (grounding leads, grounding disconnectors) and short circuit them.
5. Cover or cordon off adjacent energized parts.

6.2 Maintenance

The COMTAP® ARS is basically maintenance-free. The COMTAP® ARS has a mechanical service life of 100,000 tap-change operations. The contact life depends on the specific application and may vary (verification by Maschinenfabrik Reinhausen GmbH at the order stage). The specific contact life is shown on the label in the TAPMOTION® ED motor-drive unit.

We strongly recommend having maintenance carried out by our Technical Service department. If this route is taken, in addition to the correct performance of all work, certain components will be upgraded to the latest state of technology and manufacturing status.

If maintenance is not carried out by our Technical Service department, please ensure that the personnel who carry out the maintenance are trained by Maschinenfabrik Reinhausen GmbH or are otherwise suitably qualified to carry out the work. In such cases, we would ask you to forward to us a report on the maintenance performed so we can update our maintenance files. For inquiries about spare parts, please provide the serial number (see name plate on COMTAP® ARS and motor-drive unit) and the number of tap-change operations.

Re-commissioning after maintenance

Proceed as follows to re-commission the transformer after maintenance:

1. Ensure that the COMTAP® ARS and motor-drive unit are correctly centered (see page).
2. **⚠ DANGER!** Ensure that COMTAP® ARS and motor-drive unit are in the same operating position. Check that all safety measures are effective. Failure to do so will result in danger of death and damage to property when commissioning the transformer.

3. Carry out a transformer ratio test (see page) and fill transformer with oil (see page).
4. Commission the transformer.

7 Fault elimination

⚠ WARNING

Danger of death or severe injury!

Danger of death or severe injury from explosive gases under the COMTAP® ARS head cover!

- ► Ensure that there are no open flames, hot surfaces or sparks (for example caused by static charging) in the immediate surroundings and that none occur.
- ► De-energize all auxiliary circuits (such as the tap-change supervisory control) before removing the COMTAP® ARS head cover.
- ► Do not operate any electrical devices during the work (for example risk of sparks caused by impact wrench).
- ► Only use conductive and grounded hoses, pipes, and pump equipment that are approved for flammable liquids.

NOTICE

Damage to COMTAP® ARS and transformer!

Tripping of a protective device can indicate damage on the COMTAP® ARS and transformer! The transformer must not be energized without being inspected first!

- ► Check the COMTAP® ARS and transformer when a protective device has been tripped.
- ► Do not use the equipment again until you are sure there is no damage to the COMTAP® ARS and transformer.

The table below is intended to assist with detecting and, where possible, remedying faults.

In the event of faults on the COMTAP® ARS and motor-drive unit, which cannot be easily corrected on site, or if a protective device has been tripped, please inform your authorized MR representative, the transformer manufacturer or contact us directly at:

Maschinenfabrik Reinhausen GmbH
Technical Service
Postfach 12 03 60
93025 Regensburg
Germany
Phone: +49 94140 90-0
Fax: +49 9 41 40 90-7001
E-mail: service@reinhausen.com
Internet: www.reinhausen.com

Error pattern	Action
Activation of tap-change supervisory device	Contact MR.
Tripping of motor protective switch in motor-drive unit	See chapter "Fault elimination" in the operating instructions of the TAPMOTION® ED motor-drive unit

Error pattern	Action
COMTAP® ARS not changing tap position (sluggishness, Raise keys/Lower keys not working)	Contact MR.
No change in voltage on transformer despite change in position on motor-drive unit	Contact MR.
Tap position indicator on motor-drive unit and COMTAP® ARS different	Contact MR.
Noises on drive shaft or motor-drive unit when changing tap position	Ensure proper mounting of the drive shaft in accordance with its operating instructions. Check that hose clips and protective covers are seated correctly. Contact MR in the event of noise from the motor-drive unit.
Warning or tripping of Buchholz relay on transformer	Notify manufacturer of transformer.
Deviation from desired value when measuring winding resistance of transformer	Contact manufacturer of transformer and, if necessary, MR and provide measured values.
Deviation from desired value during dissolved gas analysis (transformer oil)	Contact manufacturer of transformer and, if necessary, MR and provide measured values.
Deviation from desired value during transformer ratio test	Contact manufacturer of transformer and, if necessary, MR and provide measured values.

Table 6: Fault elimination

8 Drawings

8.1 COMTAP® ARS, installation drawing (732771)

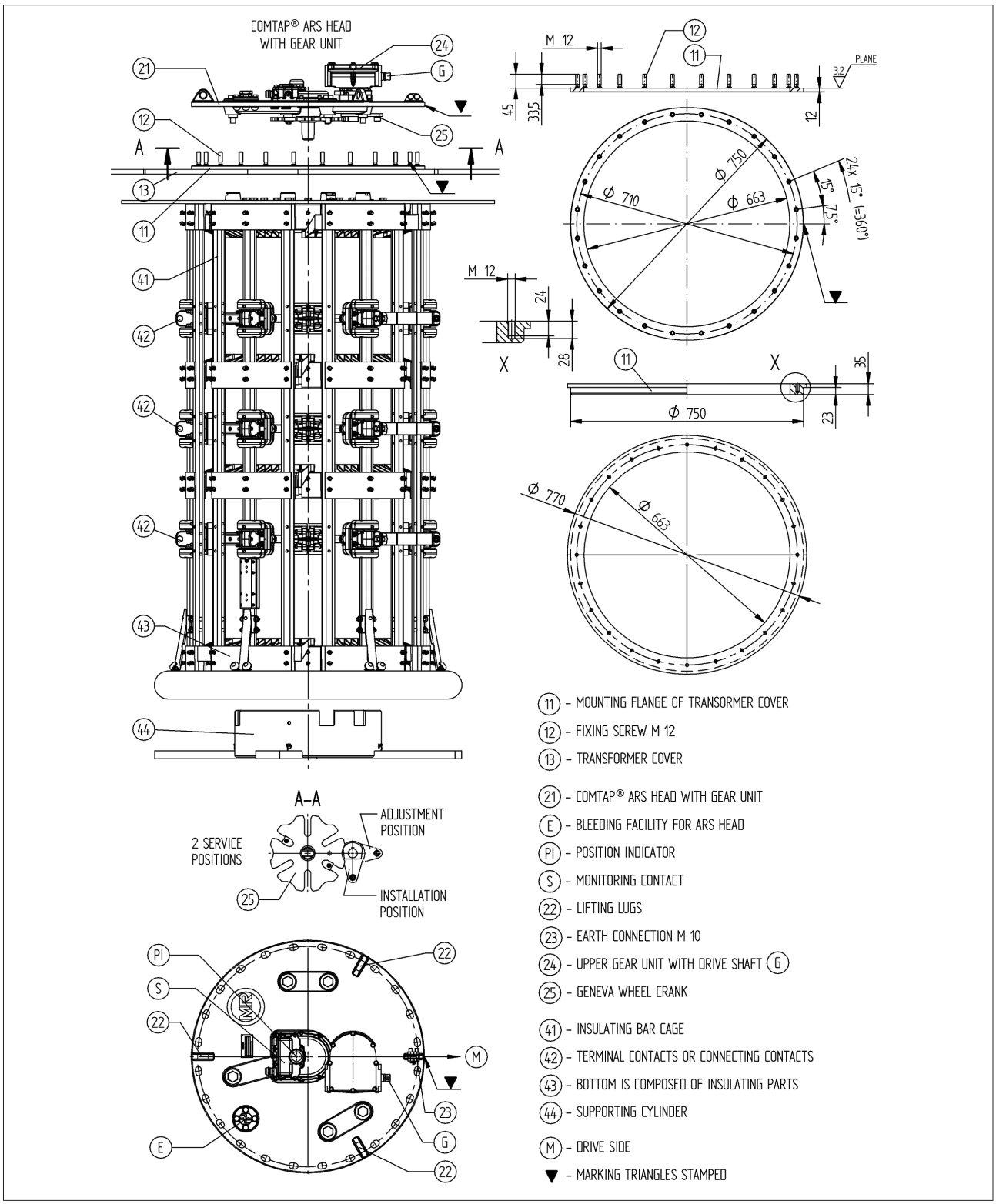

8.2 COMTAP® ARS, installation drawing bell-type tank design (733023)

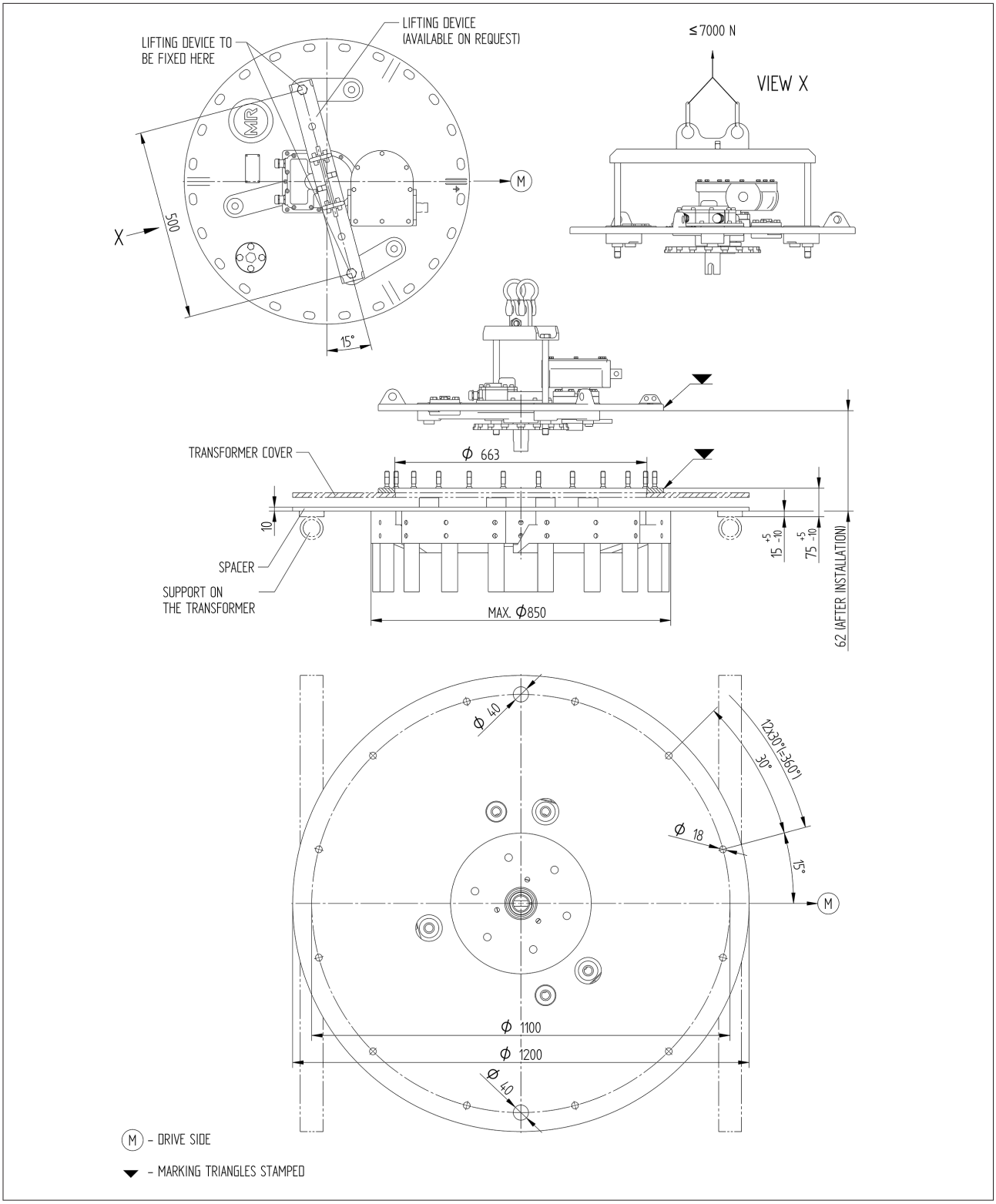

8.3 COMTAP® ARS, position of supporting structure (supporter, 735714)

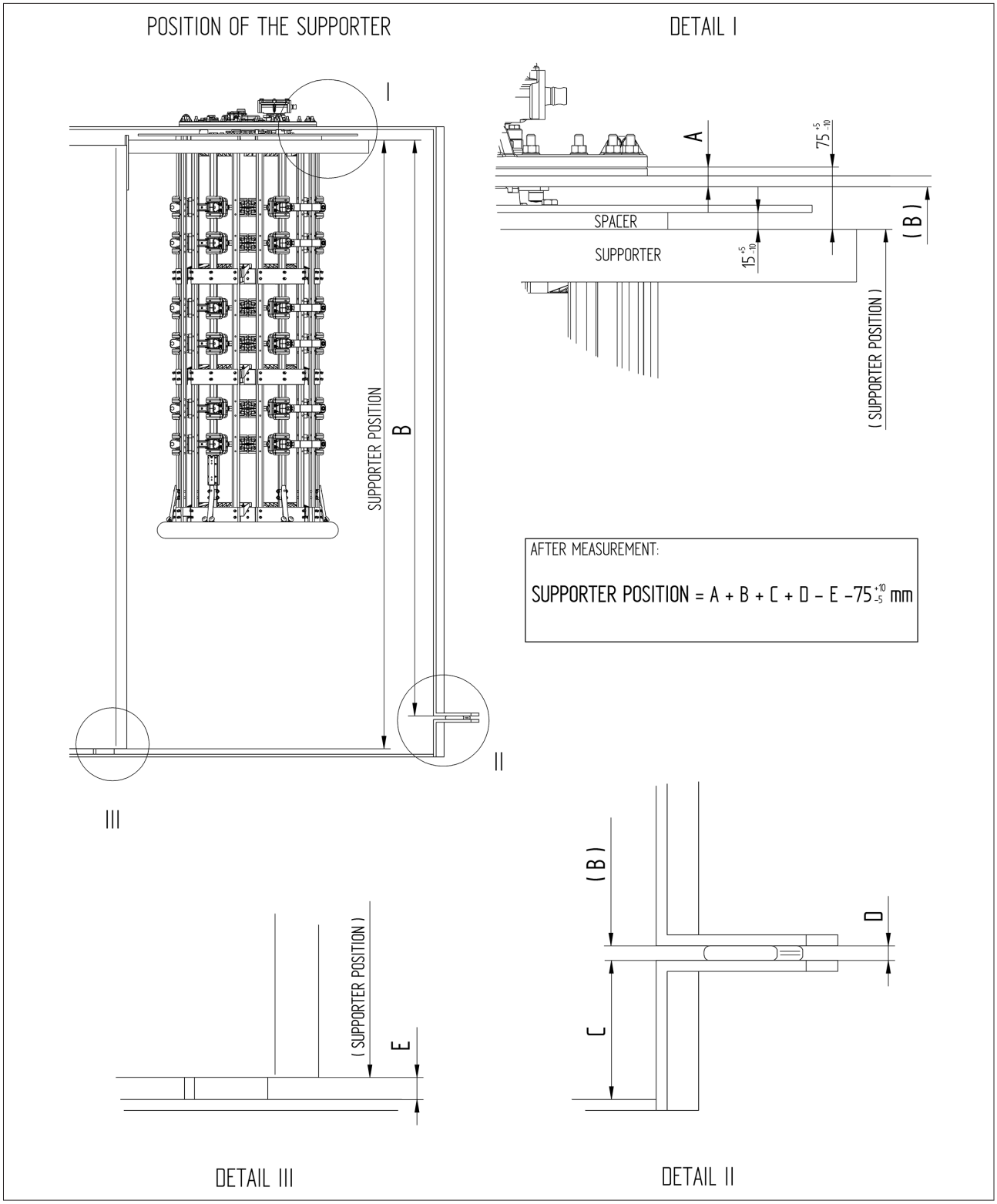

8.4 COMTAP® ARS, tap-change supervisory control (726977)

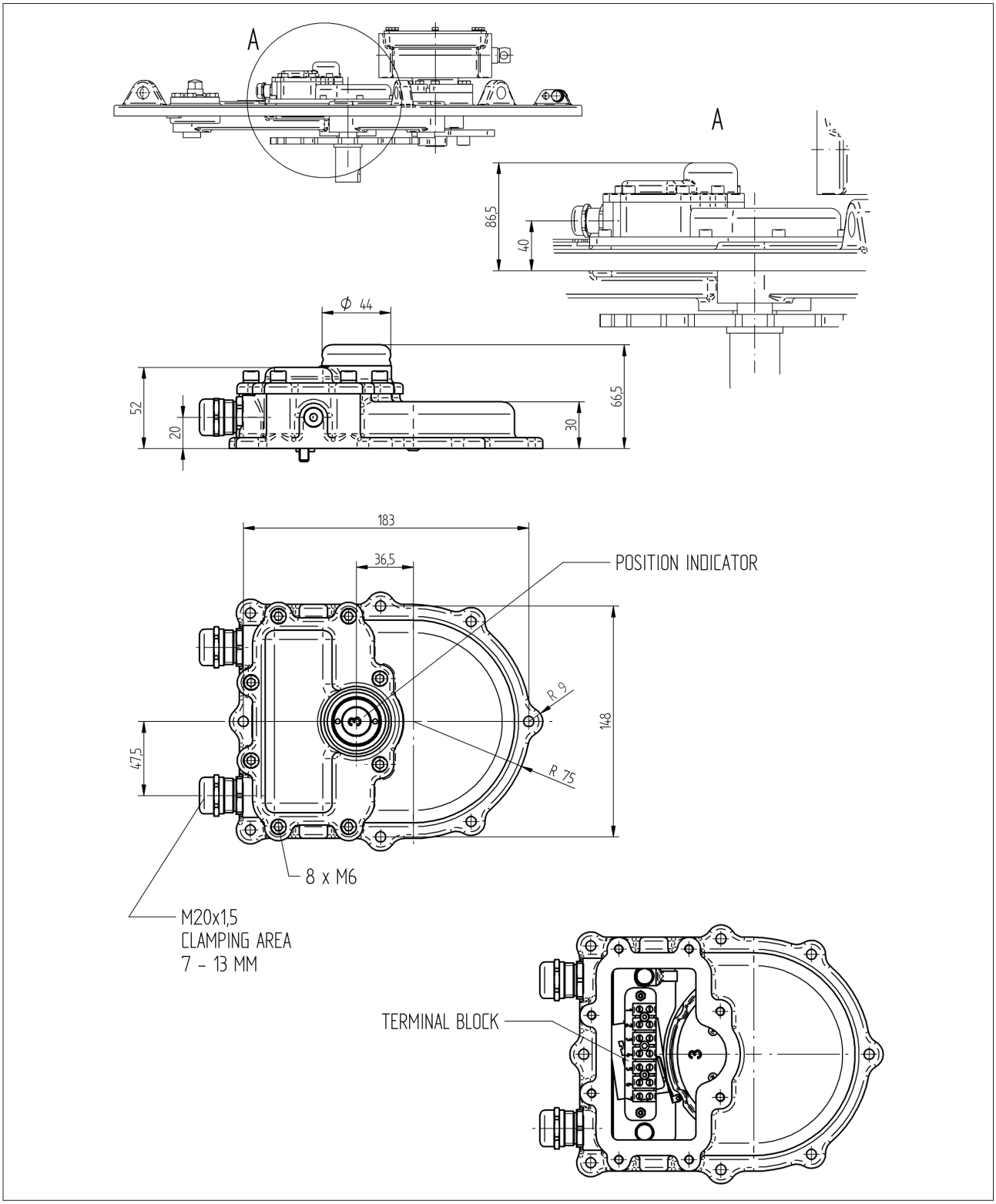

8.5 COMTAP® ARS, mounting flange (725857)

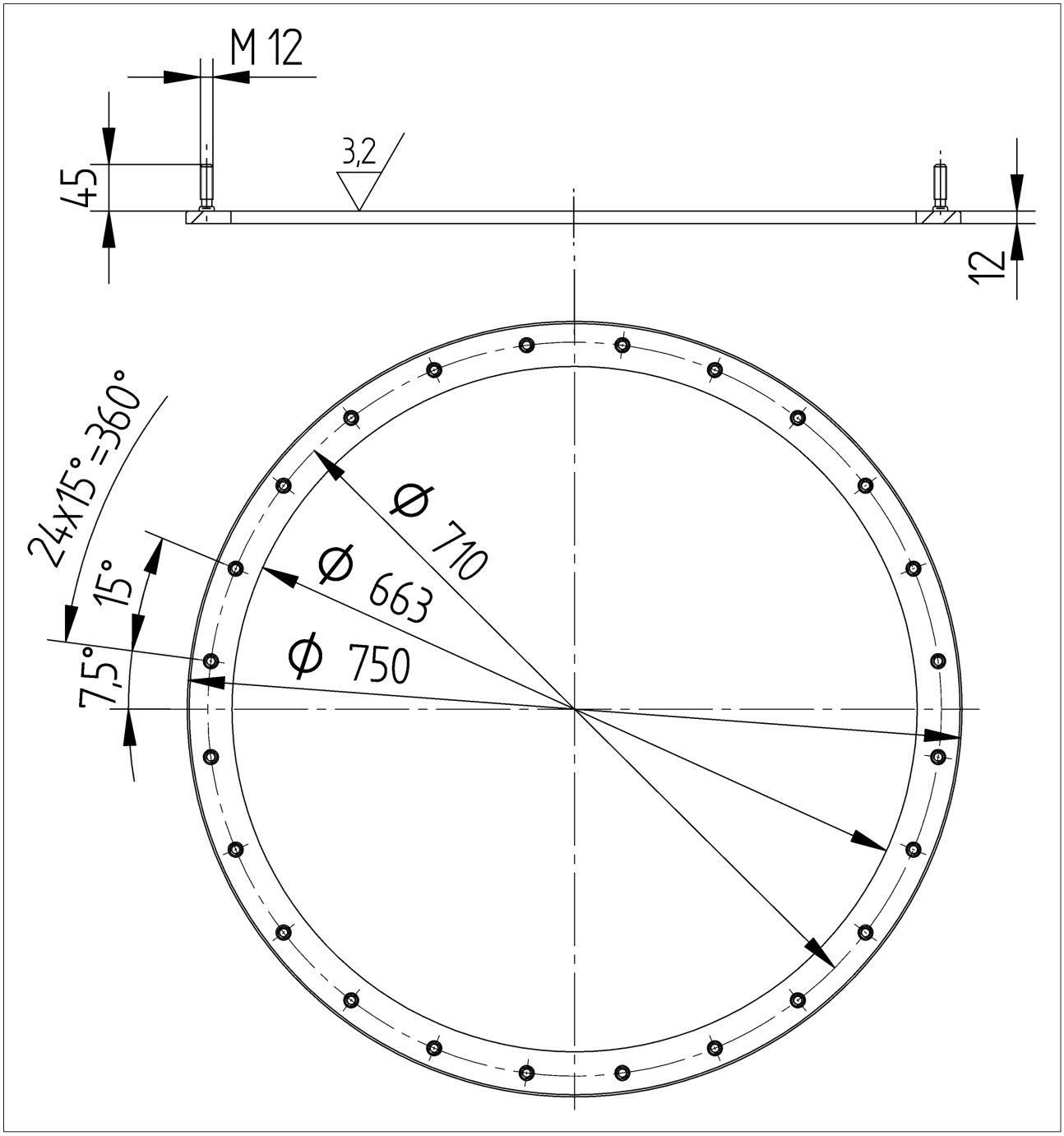

8.6 COMTAP® ARS, mounting flange made by the customer (742013)

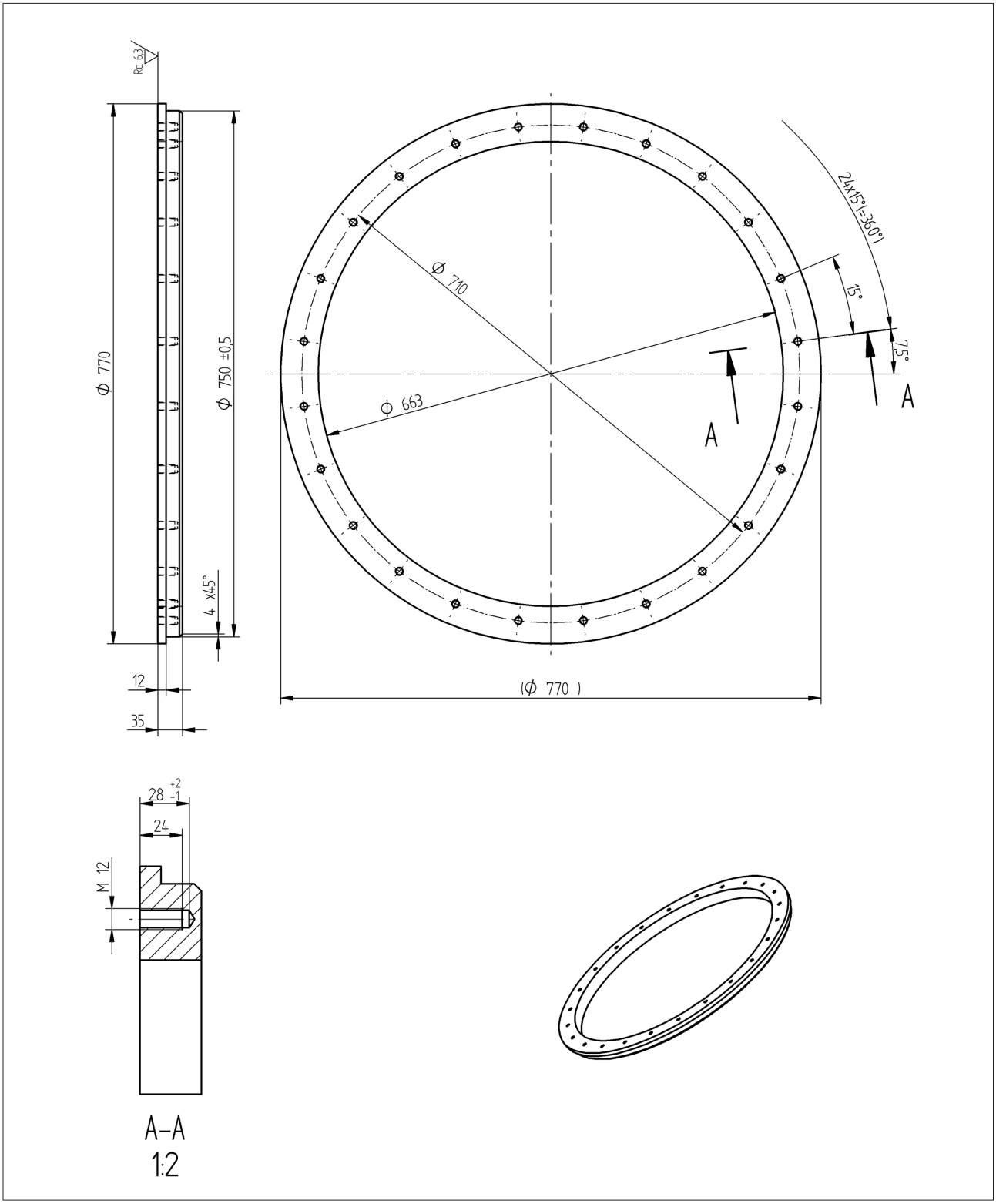

8.7 COMTAP® ARS, tracing template (726728)

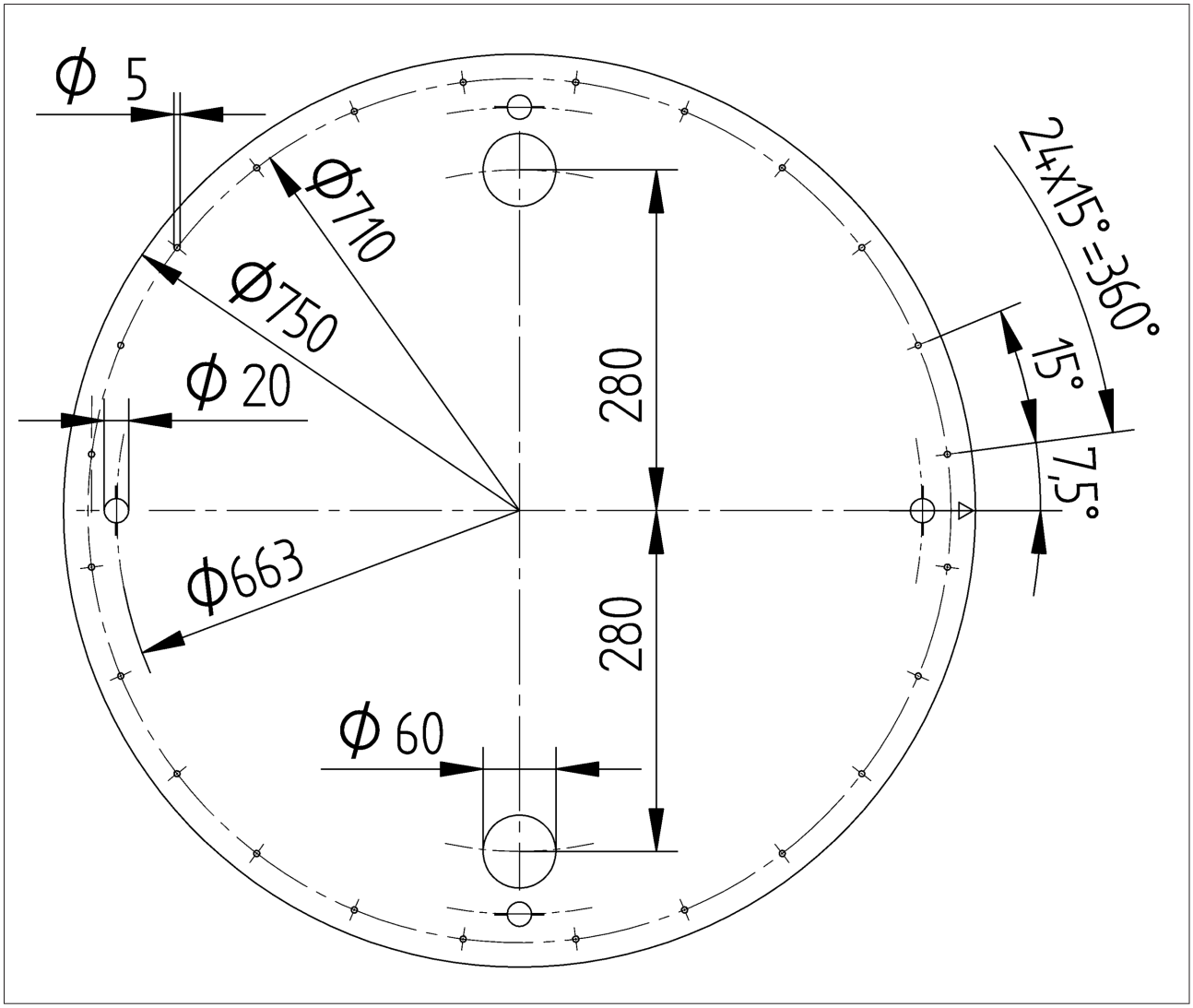

8.8 COMTAP® ARS, mounting of the COMTAP® ARS on the lower cage ring (user-specific, 732773_1)

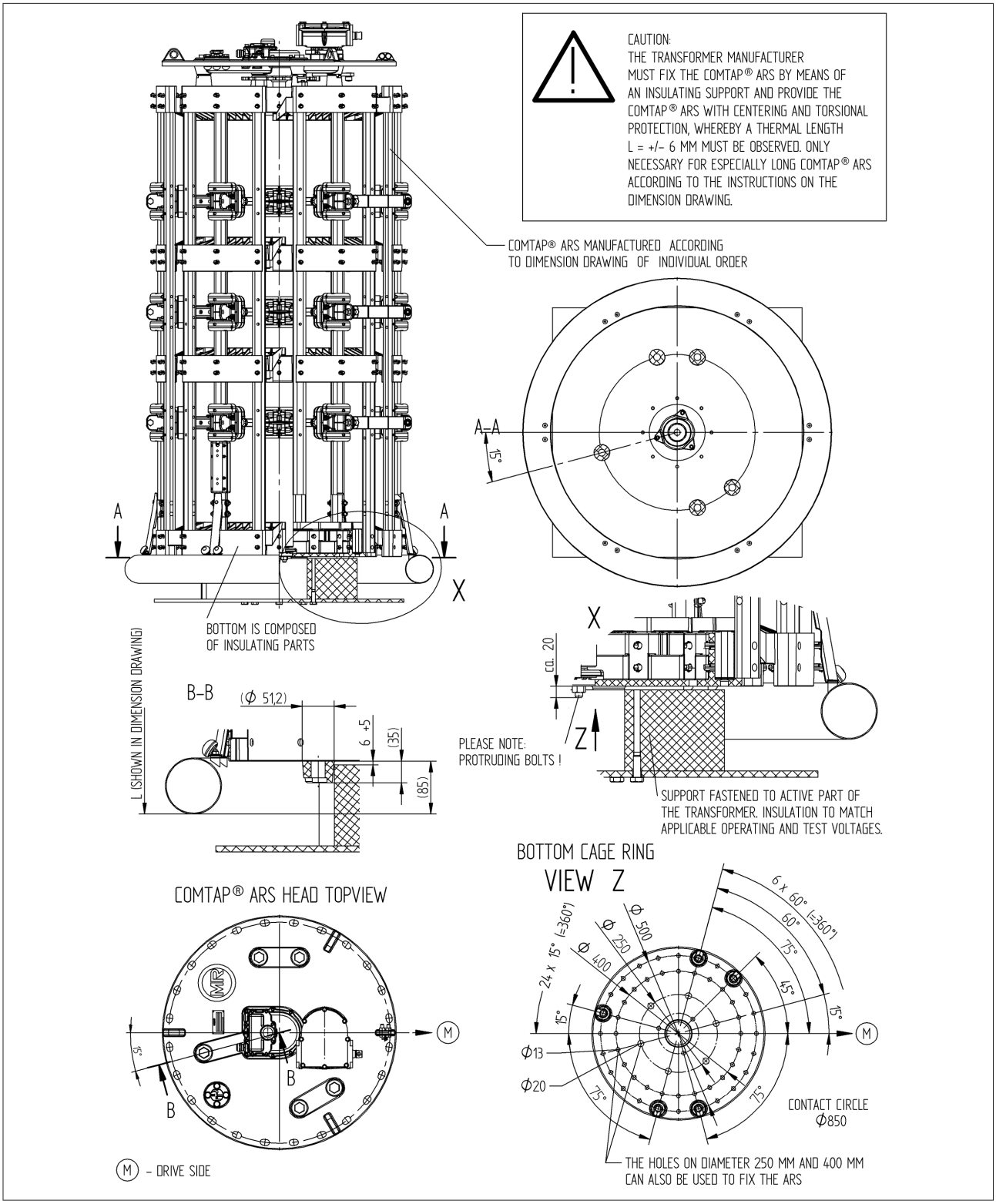

8.9 COMTAP® ARS, mounting of the COMTAP® ARS on the lower cage ring (user-specific, 732773_2)

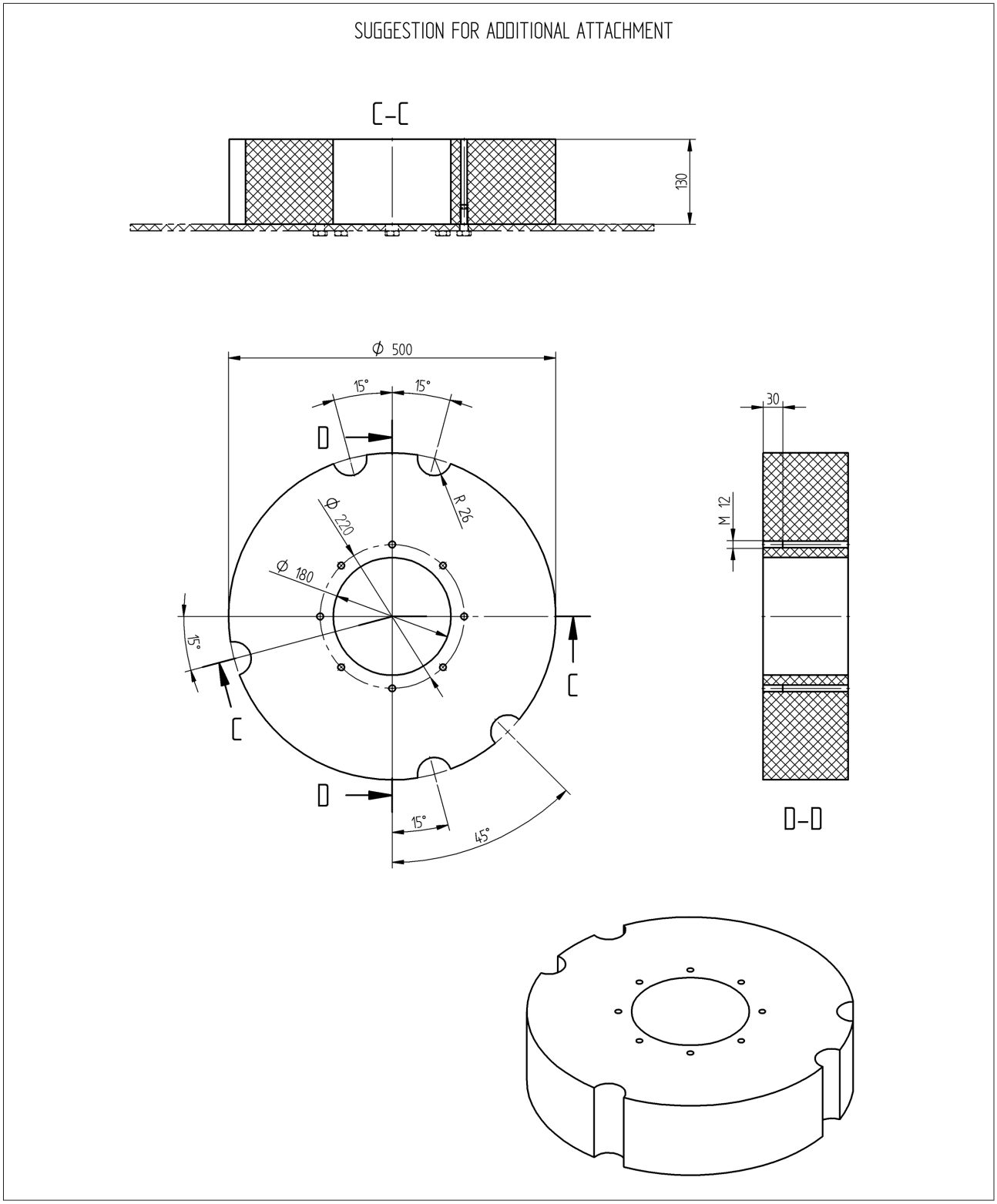

8.10 COMTAP® ARS, head with upper gear unit (725737)

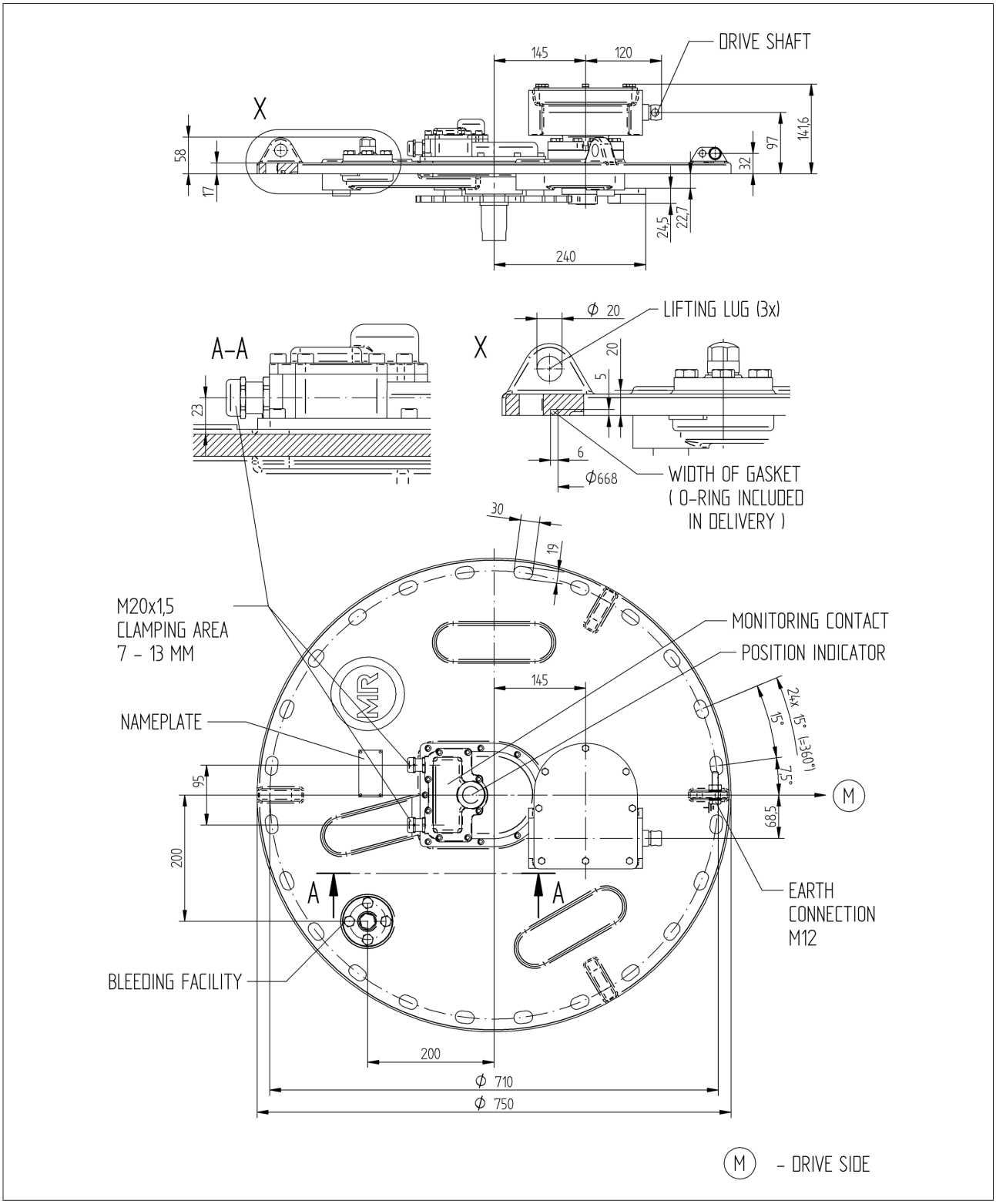

8.11 COMTAP® ARS, connection contact (734095)

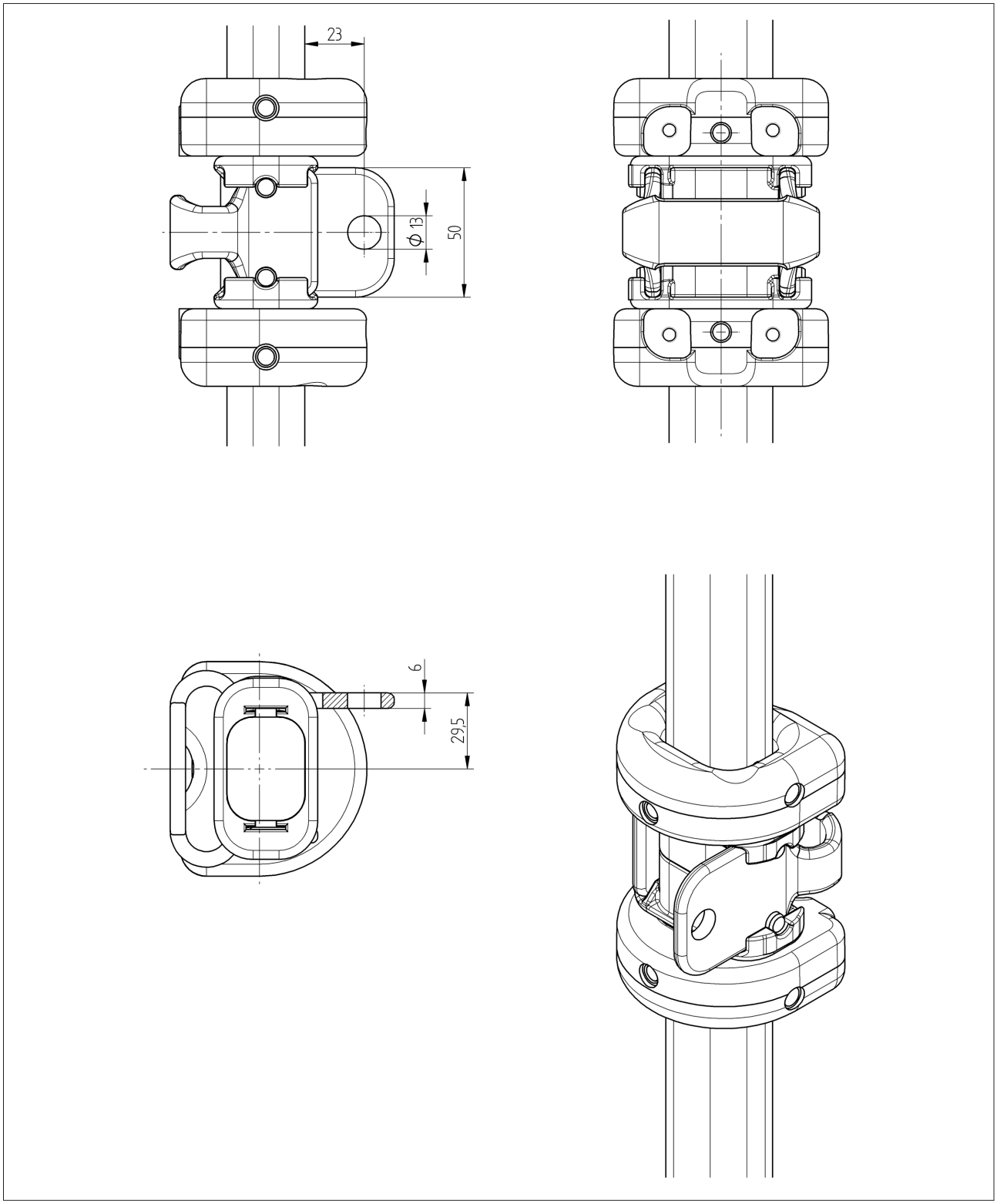

8.12 COMTAP® ARS, connecting leads (10015335)

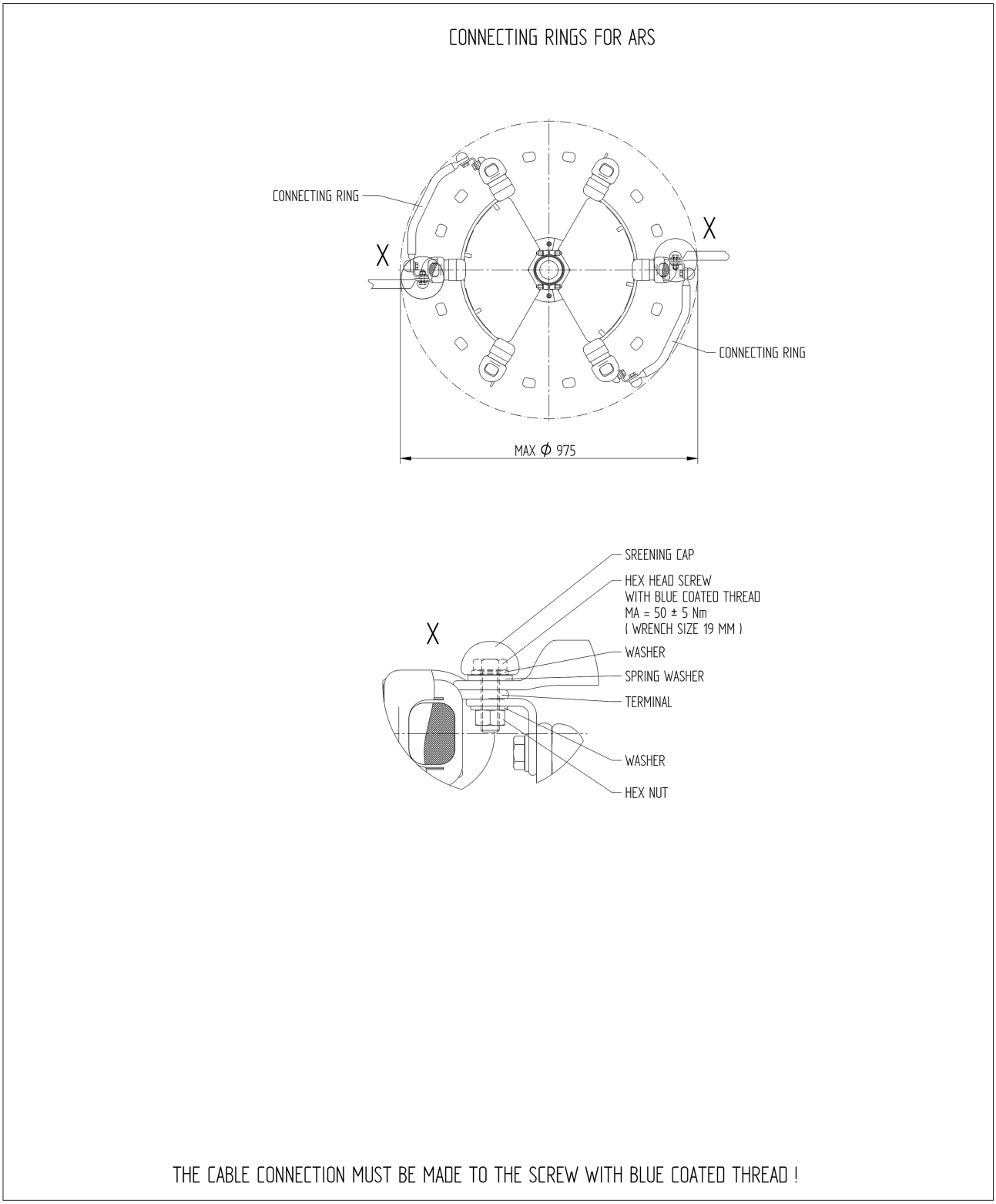

8.13 COMTAP® ARS, horizontal drive shaft (limit dimensions, 778664_2)

HORIZONTAL DRIVE SHAFT WITHOUT INSULATOR
(FOR APPLICATIONS WITH TAPMOTION® ED)

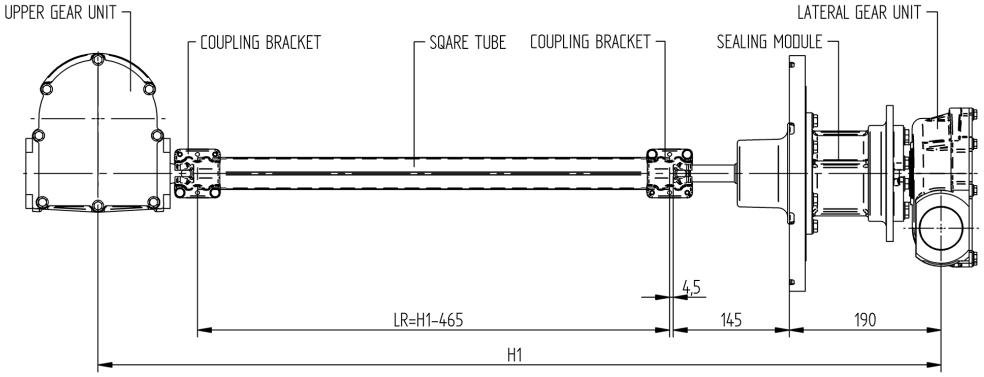

CONTACT CIRCLE	H1 min	H1 max
	DIMENSIONS IN MM	
Φ 400	830	2965
Φ 600	910	2965
Φ 850	930	2965

HORIZONTAL DRIVE SHAFT WIT INSULATOR
(FOR APPLICATIONS WITH TAPMOTION® ED)

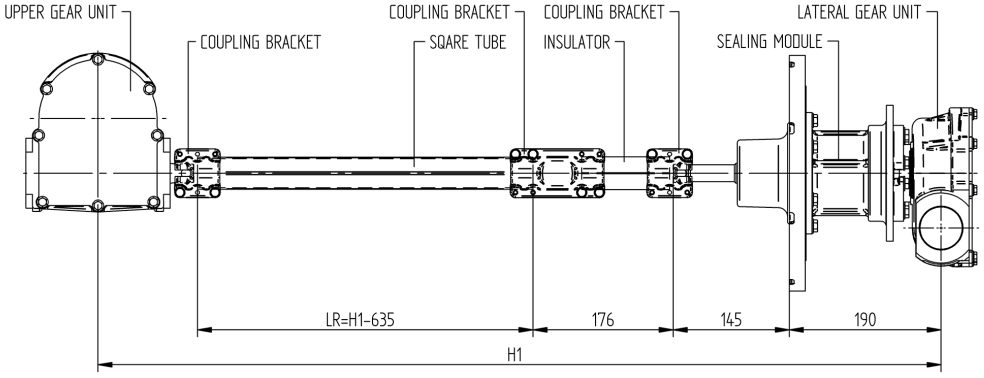

CONTACT CIRCLE	H1 min	H1 max
	DIMENSIONS IN MM	
Φ 400	1000	2635
Φ 600	1080	2635
Φ 850	1100	2635

NOTE !

H1 IS THE MINIMAL DISTANCE FOR DESIGNING THE DRIVE SHAFT ARRANGEMENT.
THE DIMENSIONS OF THE DEETAP®DU, WHICH ARE NECCESSARY FOR DESIGNING THE TRANSFORMER TANK, HAVE TO BE TAKEN FROM THE DIMENSION DRAWING OR ADDITIONAL DRAWINGS (725723:).
THE INSULATING DISTANCE BETWEEN THE CONTACTS HAS TO BE TAKEN INTO ACCOUNT.

8.14 COMTAP® ARS, swivel range of upper gear unit (732769_2)

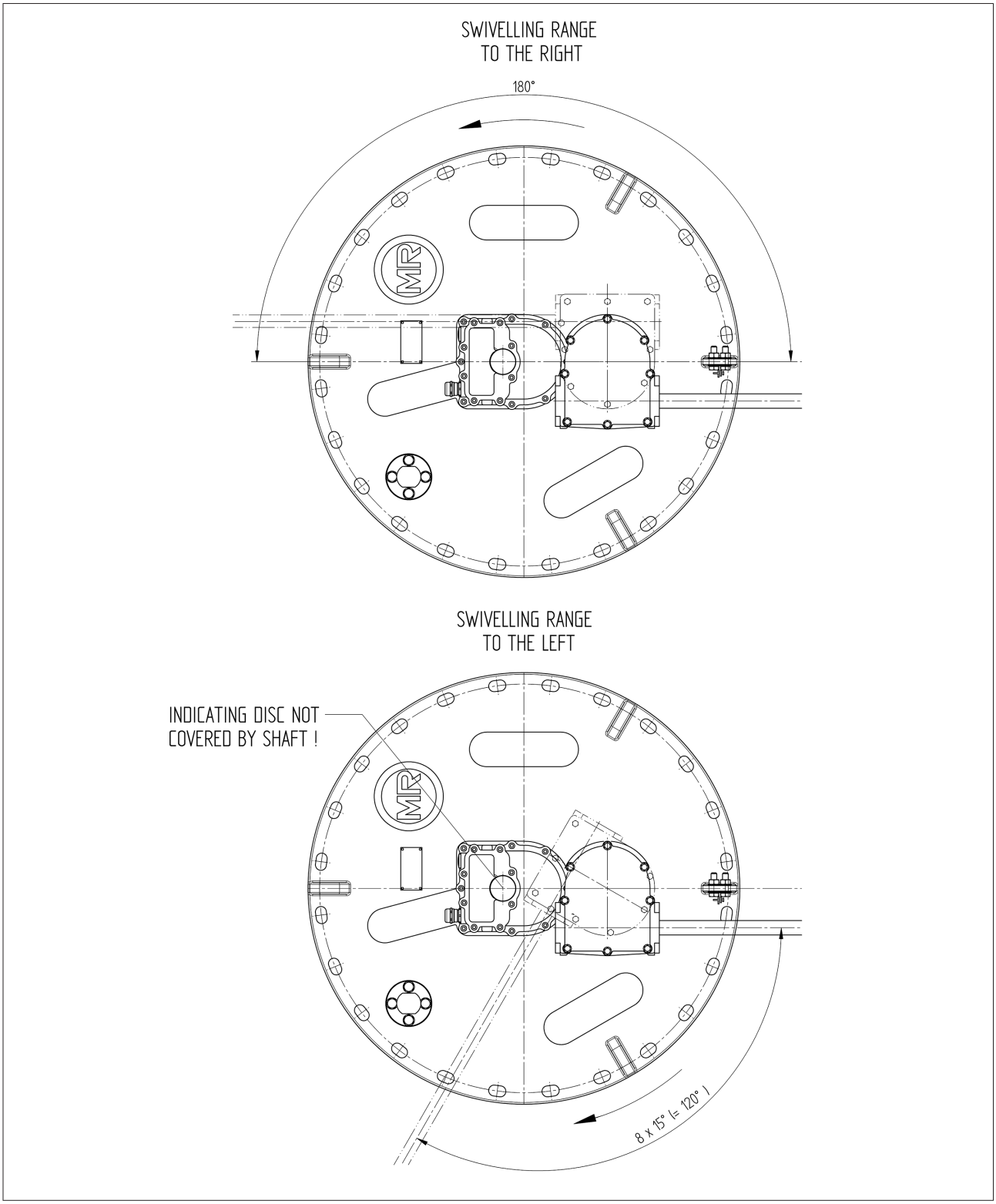

8.15 COMTAP® ARS, supplementary drawings (734087)

INSTALLATION DRAWINGS:

CONTACT CIRCLE HEAD 850 _ 732771:

COMTAP® ARS HEAD HEAD 850 _ 725737:

COMTAP® ARS FOR BELL-TYPE TANK:

CONTACT CIRCLE HEAD 850 _ 733023:

TERMINALS 1000A _ 734095:

HORIZONTAL DRIVE SHAFT _ 732769:

ADDITIONAL ATTACHMENT _ 732773:

8.16 Bevel gear CD 6400, dimensional drawing (892916)

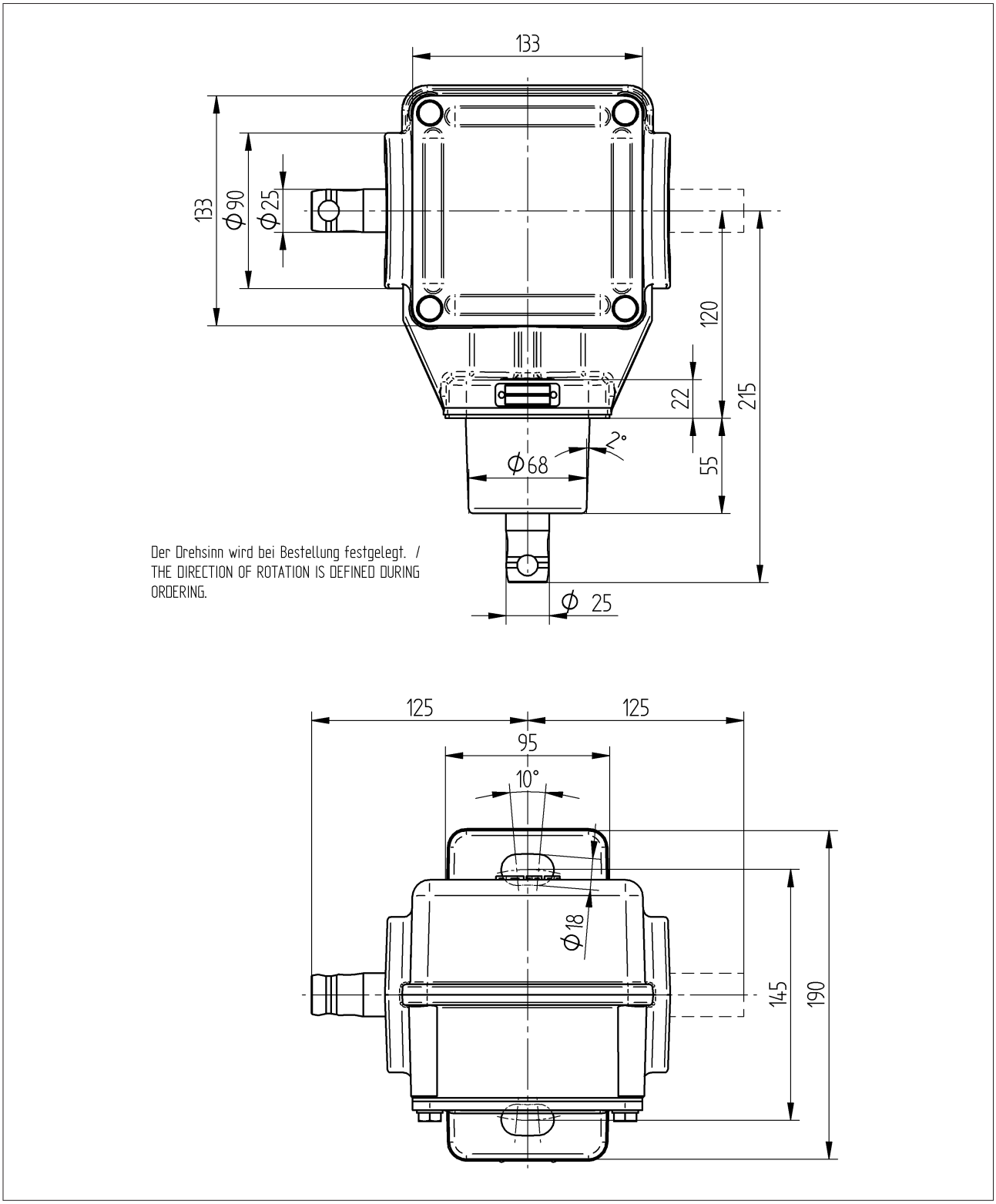

8.17 Lifting traverse (72673703)

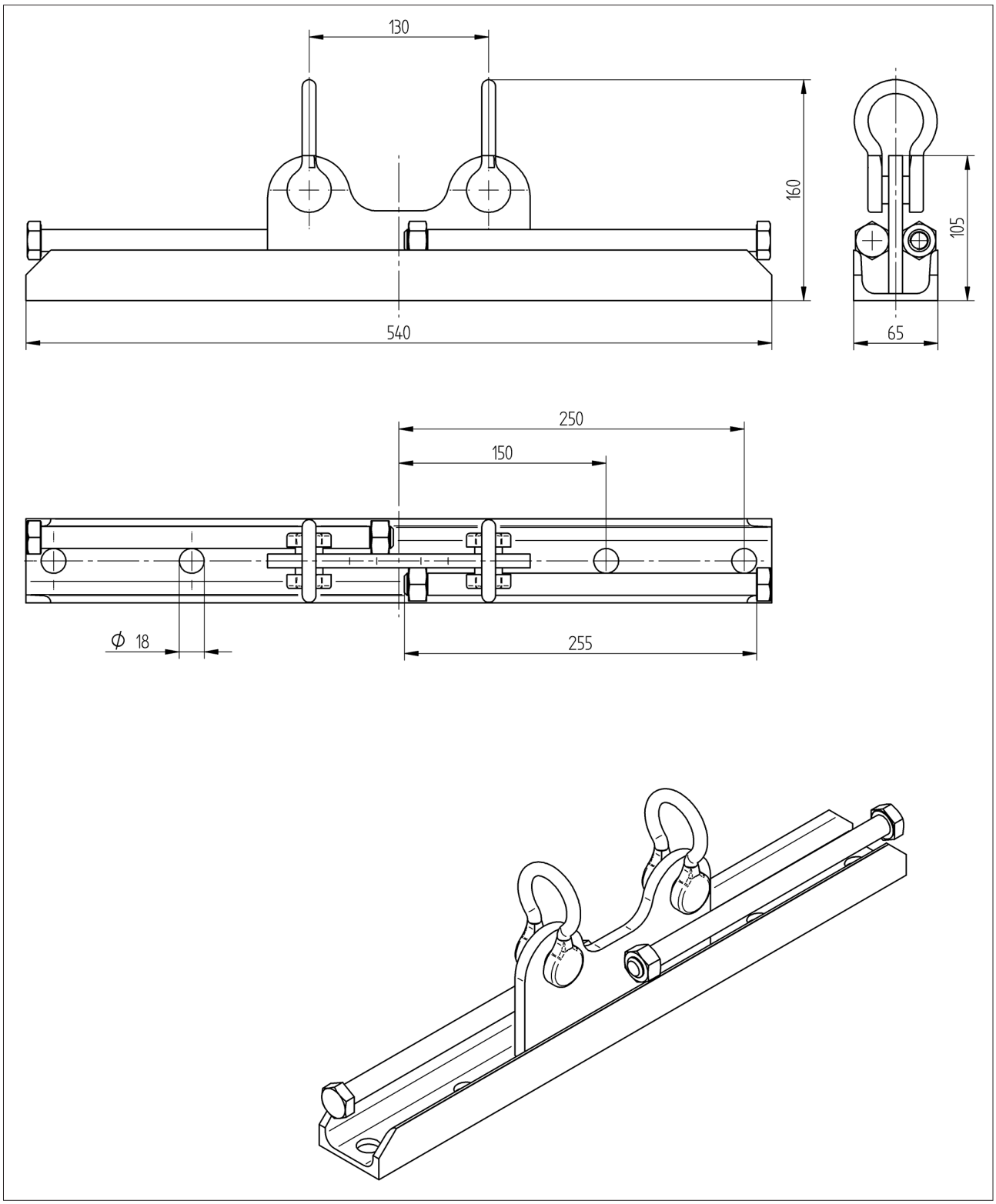

MR worldwide

Australia
Reinhausen Australia Pty. Ltd.
17/20-22 St Albans Road
Kingsgrove NSW 2208
Phone: +61 2 9502 2202
Fax: +61 2 9502 2224
E-Mail: sales@au.reinhausen.com

Brazil
MR do Brasil Indústria Mecánica Ltda.
Av. Elias Yazbek, 465
CEP: 06803-000
Embu - São Paulo
Phone: +55 11 4785 2150
Fax: +55 11 4785 2185
E-Mail: vendas@reinhausen.com.br

Canada
Reinhausen Canada Inc.
3755, rue Java, Suite 180
Brossard, Québec J4Y 0E4
Phone: +1 514 370 5377
Fax: +1 450 659 3092
E-Mail: m.foata@ca.reinhausen.com

India
Easun-MR Tap Changers Ltd. (Joint Venture)
612, CTH Road
Tiruninravur, Chennai 602 024
Phone: +91 44 26300883
Fax: +91 44 26390881
E-Mail: service@easunmr.com

Indonesia
Pt. Reinhausen Indonesia
German Center, Suite 6310,
Jl. Kapt. Subijanto Dj.
BSD City, Tangerang
Phone: +62 21 5315-3183
Fax: +62 21 5315-3184
E-Mail: c.haering@id.reinhausen.com

Iran
Iran Transfo After Sales Services Co.
(Joint Venture)
Zanjan, Industrial Township No. 1 (Aliabad)
Corner of Morad Str.
Postal Code 4533144551
E-Mail: itass@iran-transfo.com

Italy
Reinhausen Italia S.r.l.
Via Alserio, 16
20159 Milano
Phone: +39 02 6943471
Fax: +39 02 69434766
E-Mail: sales@it.reinhausen.com

Japan
MR Japan Corporation
German Industry Park
1-18-2 Hakusan, Midori-ku
Yokohama 226-0006
Phone: +81 45 929 5728
Fax: +81 45 929 5741

Luxembourg
Reinhausen Luxembourg S.A.
72, Rue de Prés
L-7333 Steinsel
Phone: +352 27 3347 1
Fax: +352 27 3347 99
E-Mail: sales@lu.reinhausen.com

Malaysia
Reinhausen Asia-Pacific Sdn. Bhd
Level 11 Chulan Tower
No. 3 Jalan Conlay
50450 Kuala Lumpur
Phone: +60 3 2142 6481
Fax: +60 3 2142 6422
E-Mail: mr_rap@my.reinhausen.com

P.R.C. (China)
MR China Ltd. (MRT)
开德贸易（上海）有限公司
中国上海浦东新区浦东南路 360 号
新上海国际大厦 4 楼 E 座
邮编： 200120
电话：＋86 21 61634588
传真：＋86 21 61634582
邮箱：mr-sales@cn.reinhausen.com
mr-service@cn.reinhausen.com

Russian Federation
OOO MR
Naberezhnaya Akademika Tupoleva
15, Bld. 2 ("Tupolev Plaza")
105005 Moscow
Phone: +7 495 980 89 67
Fax: +7 495 980 89 67
E-Mail: mrr@reinhausen.ru

South Africa
Reinhausen South Africa (Pty) Ltd.
No. 15, Third Street, Booysens Reserve
Johannesburg
Phone: +27 11 8352077
Fax: +27 11 8353806
E-Mail: support@za.reinhausen.com

South Korea
Reinhausen Korea Ltd.
21st floor, Standard Chartered Bank Bldg.,
47, Chongro, Chongro-gu,
Seoul 110-702
Phone: +82 2 767 4909
Fax: +82 2 736 0049
E-Mail: you-mi.jang@kr.reinhausen.com

U.S.A.
Reinhausen Manufacturing Inc.
2549 North 9th Avenue
Humboldt, TN 38343
Phone: +1 731 784 7681
Fax: +1 731 784 7682
E-Mail: sales@reinhausen.com

United Arab Emirates
Reinhausen Middle East FZE
Dubai Airport Freezone, Building Phase 6
3rd floor, Office No. 6EB, 341 Dubai
Phone: +971 4 2368 451
Fax: +971 4 2368 225
Email: service@ae.reinhausen.com

Maschinenfabrik Reinhausen GmbH
Falkensteinstrasse 8
93059 Regensburg

+49 (0)941 4090-0
+49(0)941 4090-7001
sales@reinhausen.com

www.reinhausen.com

4434052/01 EN ▪ 11/16 ▪