NEWS AND MODIFICATIONS

DRIVE HANDLES AND BEVEL GEARS SERIES 070

EDITION 070_2019_Rev_00 – 14/01/2019

NEW wheel for drives 070-1.12.208, 209, 212, 212 BE, 501 and 502.

Drives 070-1.12.208, 209, 212, 212BE, 501, 502 modified mechanical block with hole Ø9,5 mm (3/8”).

EDITION 070_2019_Rev_01 – 31/05/2019

NEW wheel for drives 070-1.12.130, 408, 409 with hole for padlock Ø 9,5.

c.a.p.t.
MEMBER OF REINHAUSEN GROUP

SUMMARY

DRIVE AND BEVEL GEARS FOR LDT, SPT TAP CHANGERS

CODE	REV.	SUITABLE FOR DETCs MODELS	HANDLE	WHEEL	SIDE WALL	COVER	MECH. LOCK	PADLOCK	µS FOR EL. LOCK	1st SET OF µS	2nd SET OF µS	ELECTRO MAGNET	PAG.
070-1.12.120	04	010	✓			✓	✓	On request					3
070-1.12.130	04	010		✓		✓	✓	On request					4
070-1.12.212	05	020, 040		✓	✓(top)	✓	✓	✓					5
070-1.12.212BE	05	020, 025, 030, 040		✓	✓(top)	✓	✓	✓	✓				6
070-1.12.101	03	020		✓	✓		✓	✓					7
070-1.12.101BE	00	020, 025		✓	✓		✓	✓	✓				8
070-1.12.104	03	020, 025		✓	✓		✓	✓	✓	✓			9
070-1.12.201	03	030		✓	✓		✓	✓					10
070-1.12.201BE	00	030, 040		✓	✓		✓	✓	✓				11
070-1.12.202	06	020, 025, 030, 040		✓	✓		✓	✓	✓	✓		✓	12
070-1.12.202BE	06	020, 025, 030, 040		✓	✓		✓	✓	✓	✓	✓	✓	13
070-1.12.202-2	05	020, 025, 030, 040		✓	✓		✓	✓	✓			✓	13
070-1.12.208	05	020, 040		✓	✓		✓	✓					14
070-1.12.209	06	020, 025, 030, 040		✓	✓		✓	✓	✓				15
070-1.12.210	03	030, 040		✓	✓		✓	✓		✓			16
070-1.12.408	04	010		✓	✓(top)	✓	✓	On request					17
070-1.12.409	04	010		✓	✓		✓	On request					18
070-1.12.501	04	020, (040)		✓	✓		✓	✓					19
070-1.12.502	04	020, 025, (040)		✓	✓		✓	✓	✓				20
070-1.12.211	03	010, 020, 025, 030, 040			In-tank								21
070-1.12.106	02	010, 020, 025, 030, 040			In-tank								22
070-1.12.203	03	030, 040				✓							23
070-1.12.204	05	030, 040				✓							24
070-1.12.205	05	030, 040			✓								25
070-1.12.405	05	020, 025			✓(top)	✓							26
070-1.12.503	03	020, 025				✓							27
070-1.12.506	04	020, 025			✓								28
070-1.12.310	01	020, 025, 030, 040			✓		✓						29, 30
070-1.12.350	03	020, 025, 030, 040											31

µS: Micro-switch

Tap-changers can be controlled by manual drive on transformer cover, on tank wall at man's height or by motor drive on tank wall.
The pad lockable handle control boxes with or without electric contacts are of sturdy aluminum casting and MDU (motor drive unit) box is made of painted steel.
The application of the following components depends on the type of tap changers and on the assembling diagram.

c.a.p.t.
MEMBER OF REINHAUSEN GROUP

DRIVE TYPE 070-1.12.120

- DRIVE HANDLE ON COVER

Dimension in mm

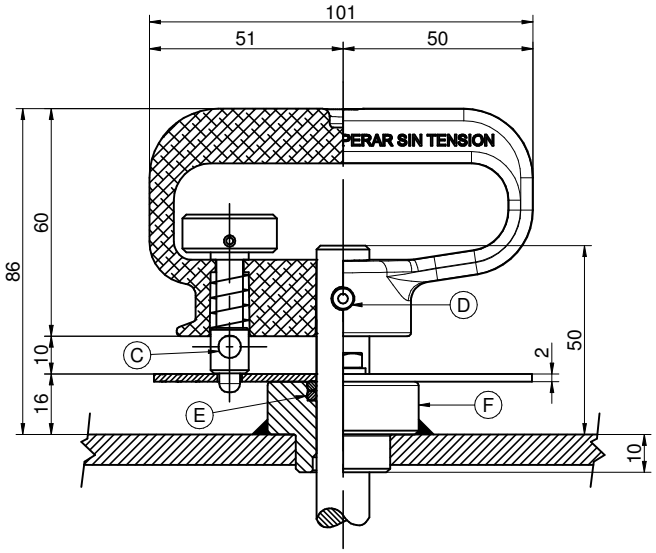

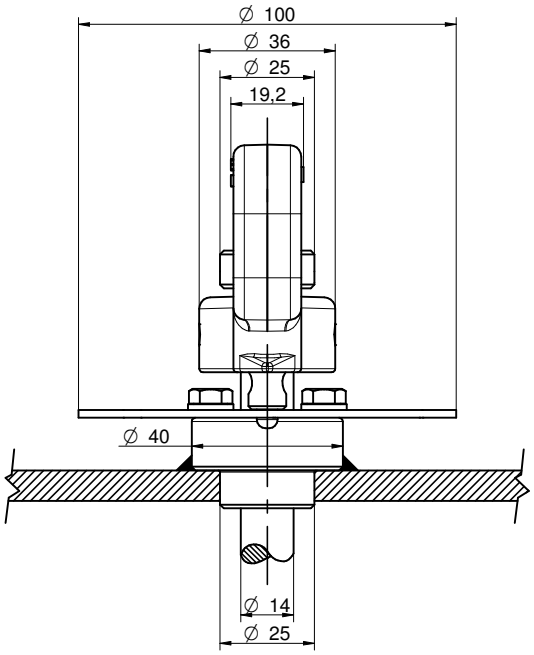

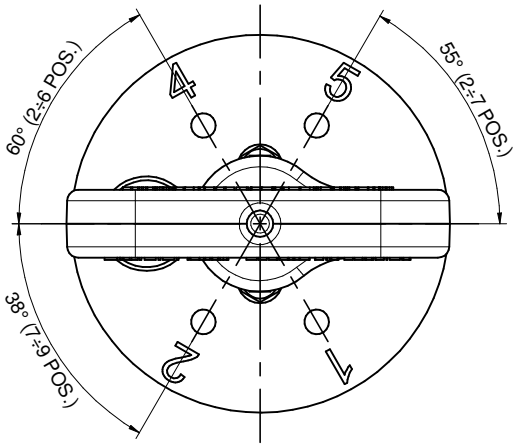

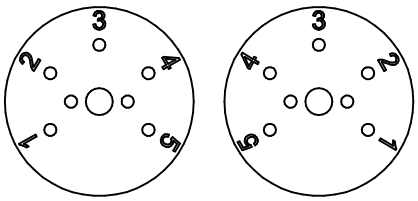

Positioning disk supplied numbered on both sides.

C) *Hole ø6 for padlock.*

D) *Hole for pin ø6 to be drilled during the final assembling of the transformer.*

E) *N°2 gasket OR 3056.*

F) *Steel stuffing box to be welded to the lid of transformer.*

- Handle is composed by stuffing box, inox-steel index disc and aluminium handle with mechanical block on the position.

DRIVE TYPE 070-1.12.130

- DRIVE WHEEL ON COVER

Dimension in mm

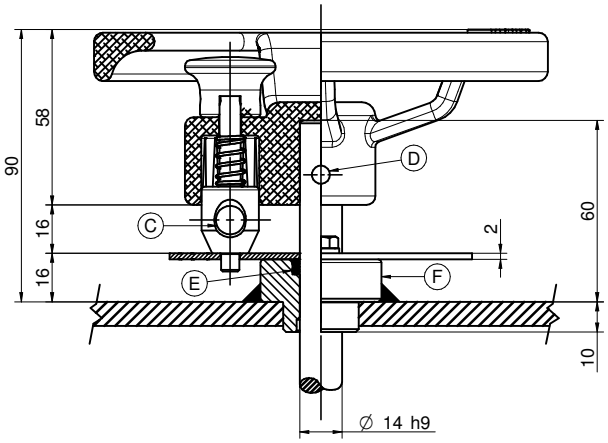

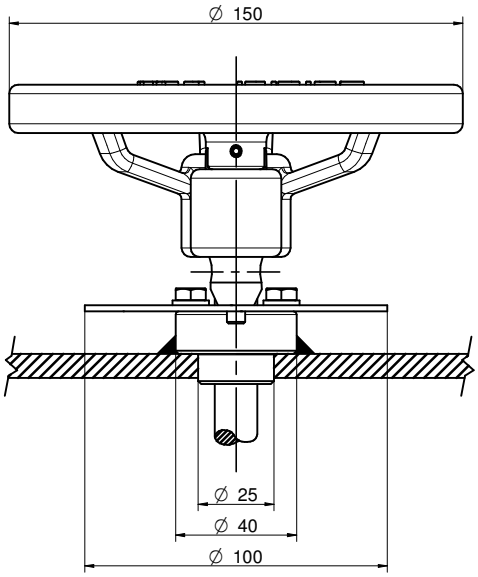

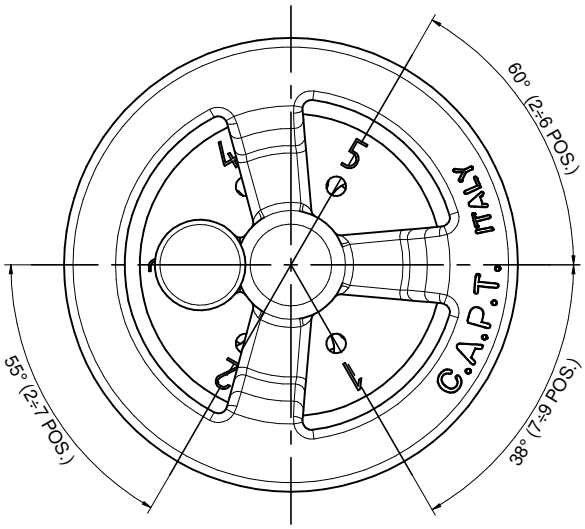

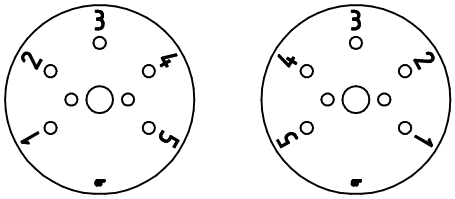

Positioning disk supplied numbered on both sides.

Weight: ~0,8 Kg

C) *Hole ø9,5 for padlock with shackle thickness Ø min: 5, Ø Max: 9.*

D) *Hole for pin ø6 to be drilled during the final assembling of the transformer.*

E) *N°2 gasket OR 3056.*

F) *Steel stuffing box to be welded to the lid of transformer.*

- Handle is composed by stuffing box, inox-steel index disc and aluminium handle with mechanical block on the position.

DRIVE TYPE 070-1.12.212

- DRIVE LOCATED ON THE TRANSFORMER LID OR ON TOP OF TANK WALL

Dimension in mm

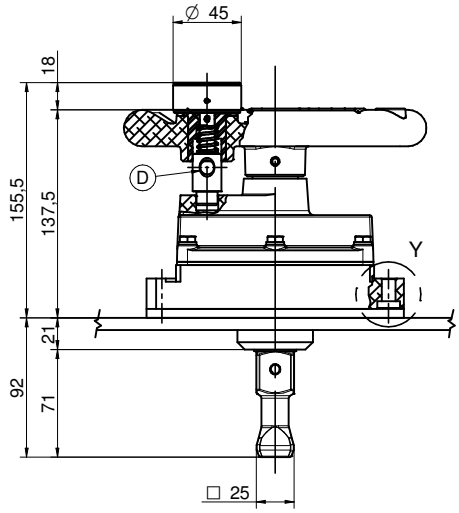

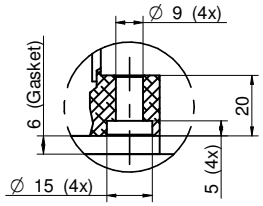

DET. Y

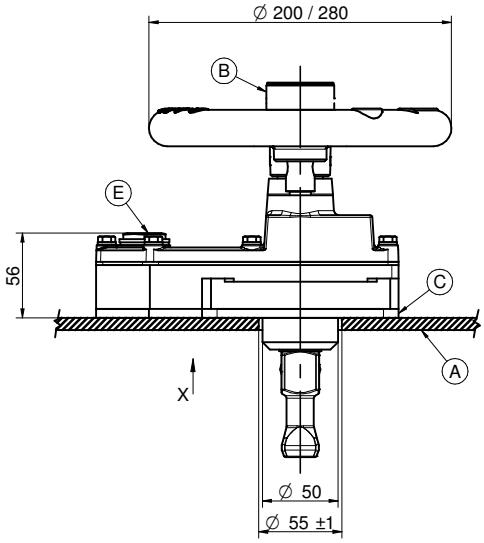

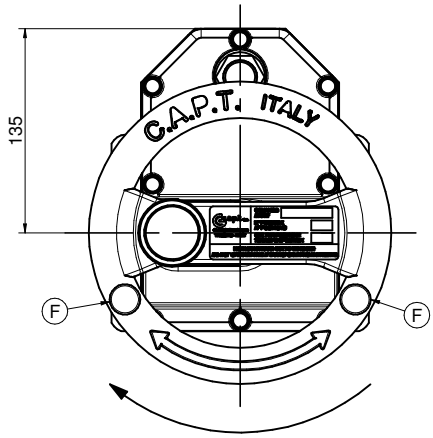

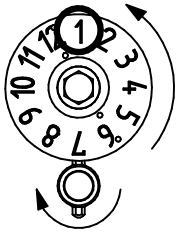

View X

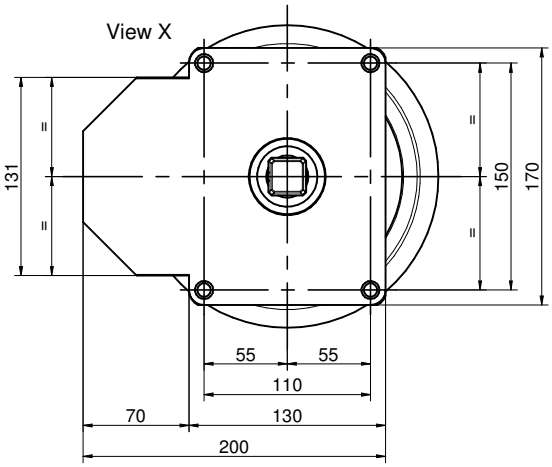

Weight: ~4,6 kg

- Standard drive can be used at max. 12 positions.
- Standard type with 1 turn of 360° for each position.
- Special type with 2 or more turns.
- Standard paint RAL 7031.

A) *Transformer tank lid.*

B) *Mechanical block with padlock.*

C) *Flat gasket 6 mm thickness.*

D) *Hole ø9,5 for padlock.*

E) *Numbering window.*

F) *Signs +/- (or others) for raising and lowering tap position have to be engraved by transformer manufacturer.*

DRIVE TYPE 070-1.12.212BE

- DRIVE LOCATED ON THE TRANSFORMER LID OR ON TOP OF TANK WALL

Dimension in mm

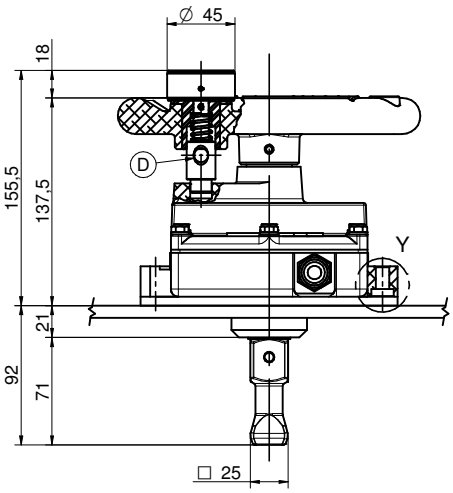

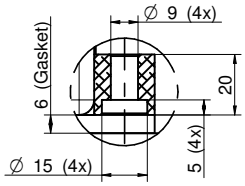

DET. Y

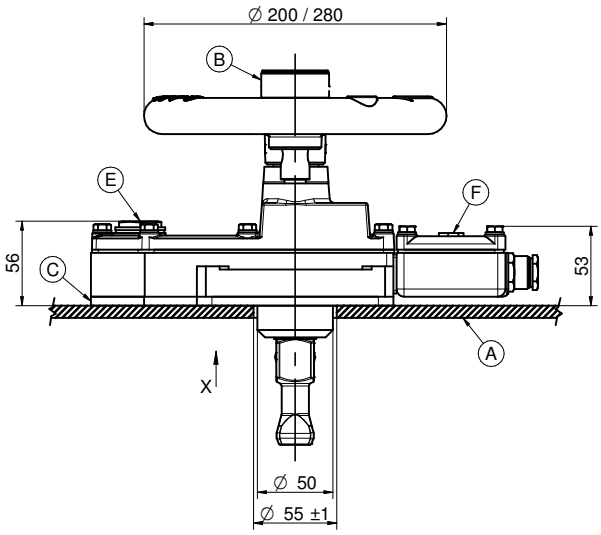

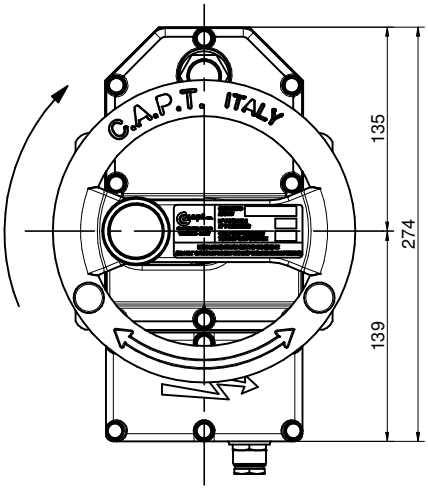

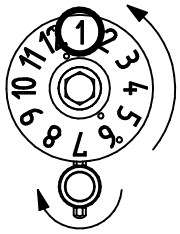

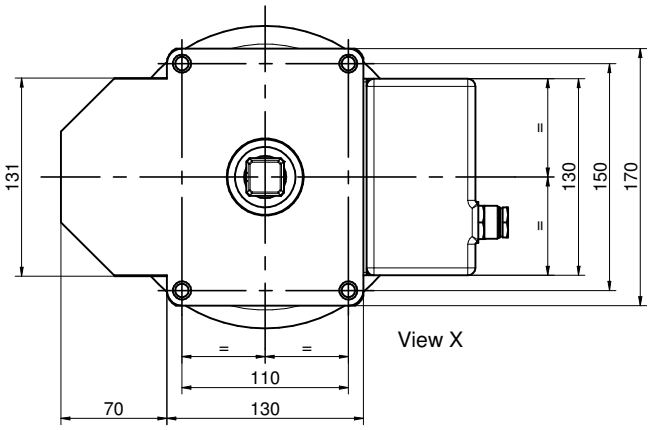

View X

Weight: ~5,3 kg

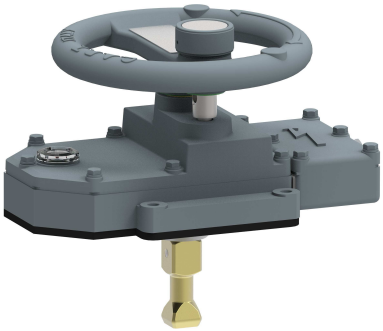

- Standard drive can be used at max. 12 positions.
- Standard type with 1 turn of 360° for each position.
- Special type with 2 or more turns.
- Standard paint RAL 7031.

A) *Transformer tank lid.*

B) *Mechanical block with padlock.*

C) *Flat gasket 6 mm thickness.*

D) *Hole ø9,5 for padlock.*

E) *Numbering window.*

F) *Terminal box with electric contacts for opening the high and low voltage switch actuated turning the wheel.*

G) *Signs +/- (or others) for raising and lowering tap position have to be engraved by transformer manufacturer.*

H) *Cable gland PG 13,5*

DRIVE TYPE 070-1.12.101

- DRIVE WITH MECHANICAL BLOCK AND PADLOCK

Dimension in mm

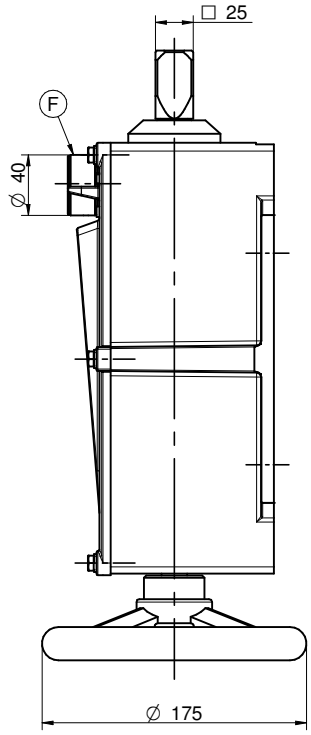

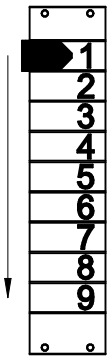

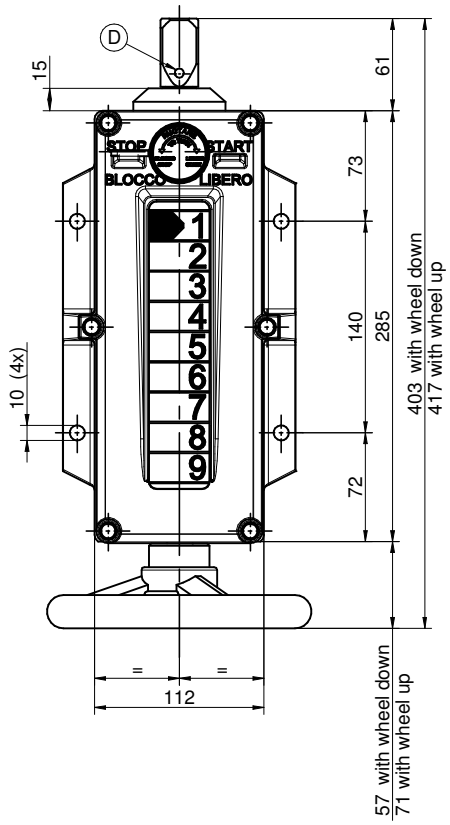

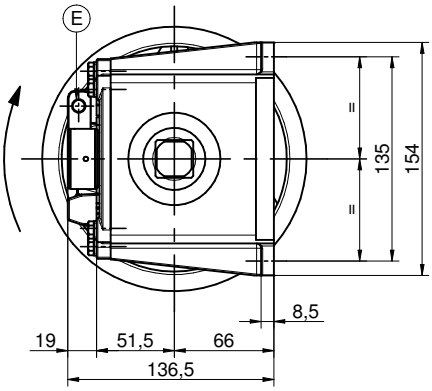

- Standard drive can be used at max. 9 positions.
- Standard type with 1 turn of 360° for each position.
- Special type with 2 or more turns.
- Standard paint RAL 7031.

D) *Hole for pin ø6 to be drilled during the final assembling of the transformer*

E) *Hole ø6,5 for padlock.*

F) *Mechanical block with padlock.*

DRIVE TYPE 070-1.12.101BE

- DRIVE WITH CHANGEOVER CONTACT AND FACILITIES FOR LOCKING LOCATED ON TRANSFORMER TANK WALL

Dimension in mm

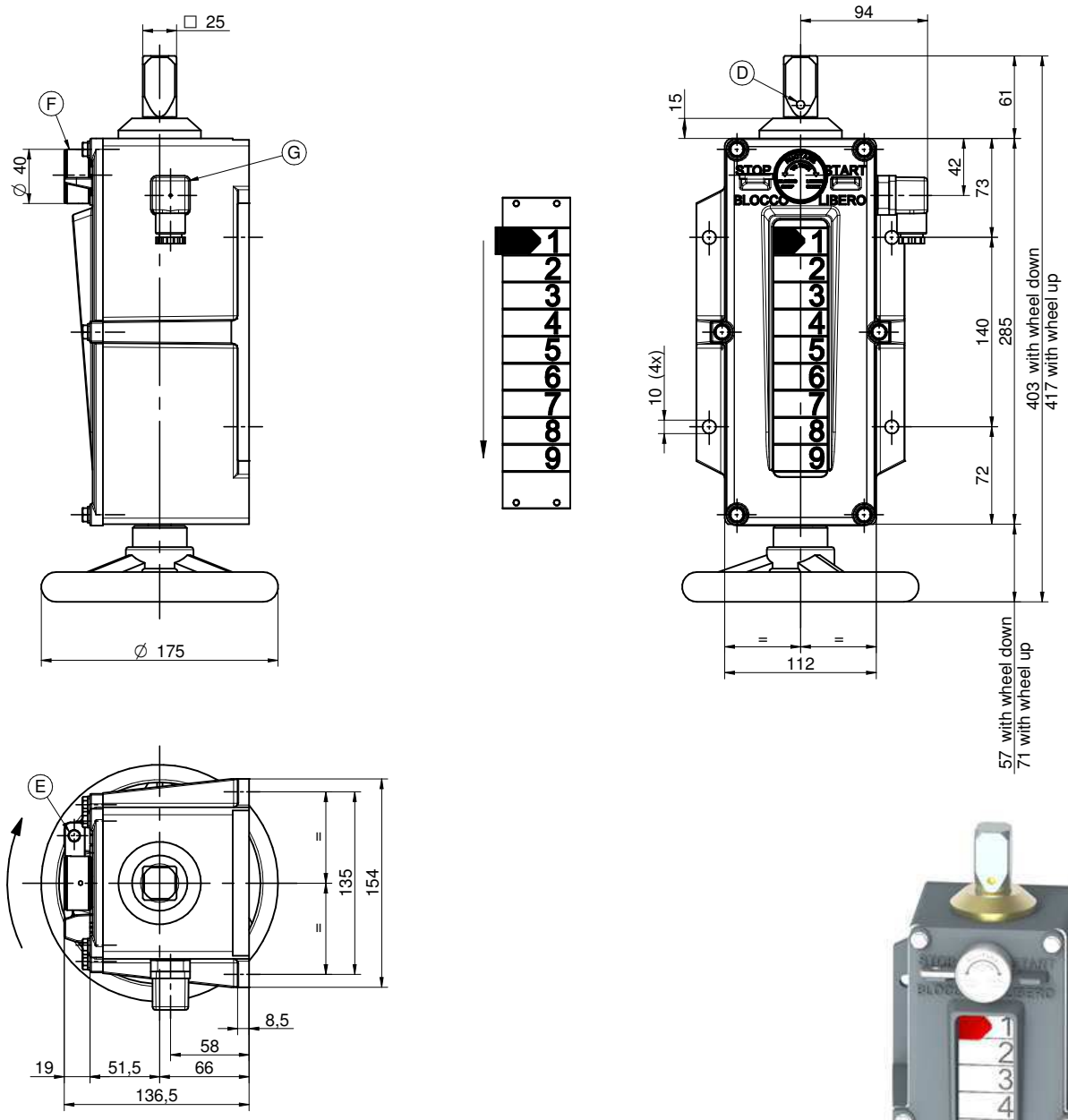

- Standard drive can be used at max. 9 positions.
- Standard type with 1 turn of 360° for each position.
- Special type with 2 or more turns.
- Standard paint RAL 7031.

D) *Hole for pin ø6 to be drilled during the final assembling of the transformer.*

E) *Hole ø6,5 for padlock.*

F) *Mechanical block with padlock.*

G) *Microswitch 6 A - 250V (NO - NC) for consent switches handling cables exit DIN 43650/PG9. it starts working at the initial handling wheel.*

DRIVE TYPE 070-1.12.104

- DRIVE WITH CHANGEOVER CONTACT, FACILITIES FOR LOCKING AND POSITION TRANSMITTER

Dimension in mm

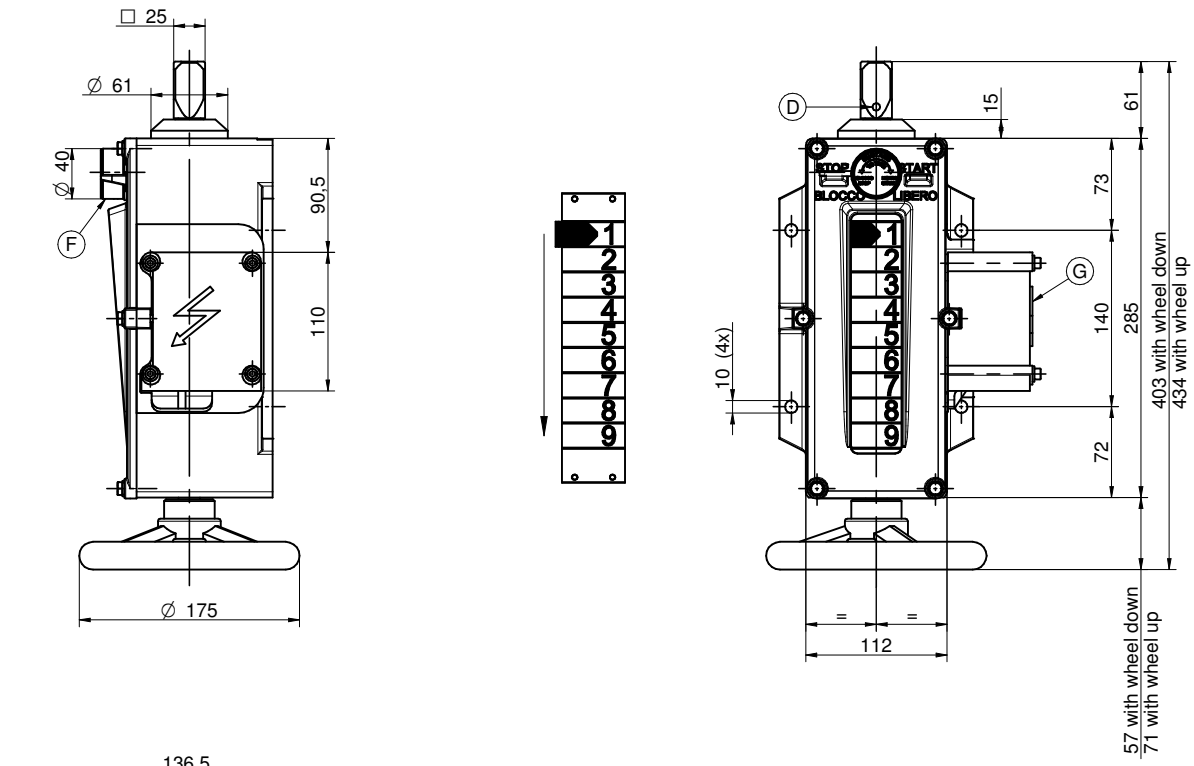

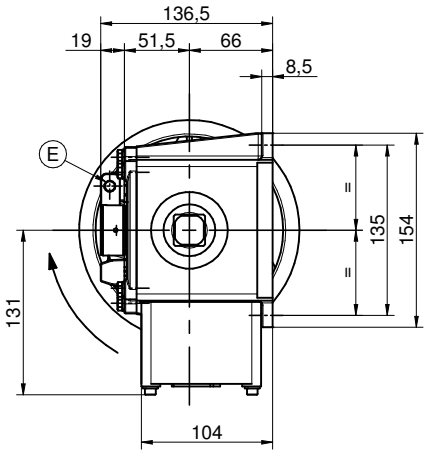

- Standard drive can be used at max. 9 positions.
- Standard type with 1 turn of 360° for each position.
- Special type with 2 or more turns.
- Standard paint RAL 7031.

D) *Hole for pin ø6 to be drilled during the final assembling of the transformer.*

E) *Hole ø6,5 for padlock.*

F) *Mechanical block with padlock.*

G) *Terminal board box for electrical block and positions transmitter.*

DRIVE TYPE 070-1.12.201

- DRIVE WITH MECHANICAL BLOCK AND PADLOCK

Dimension in mm

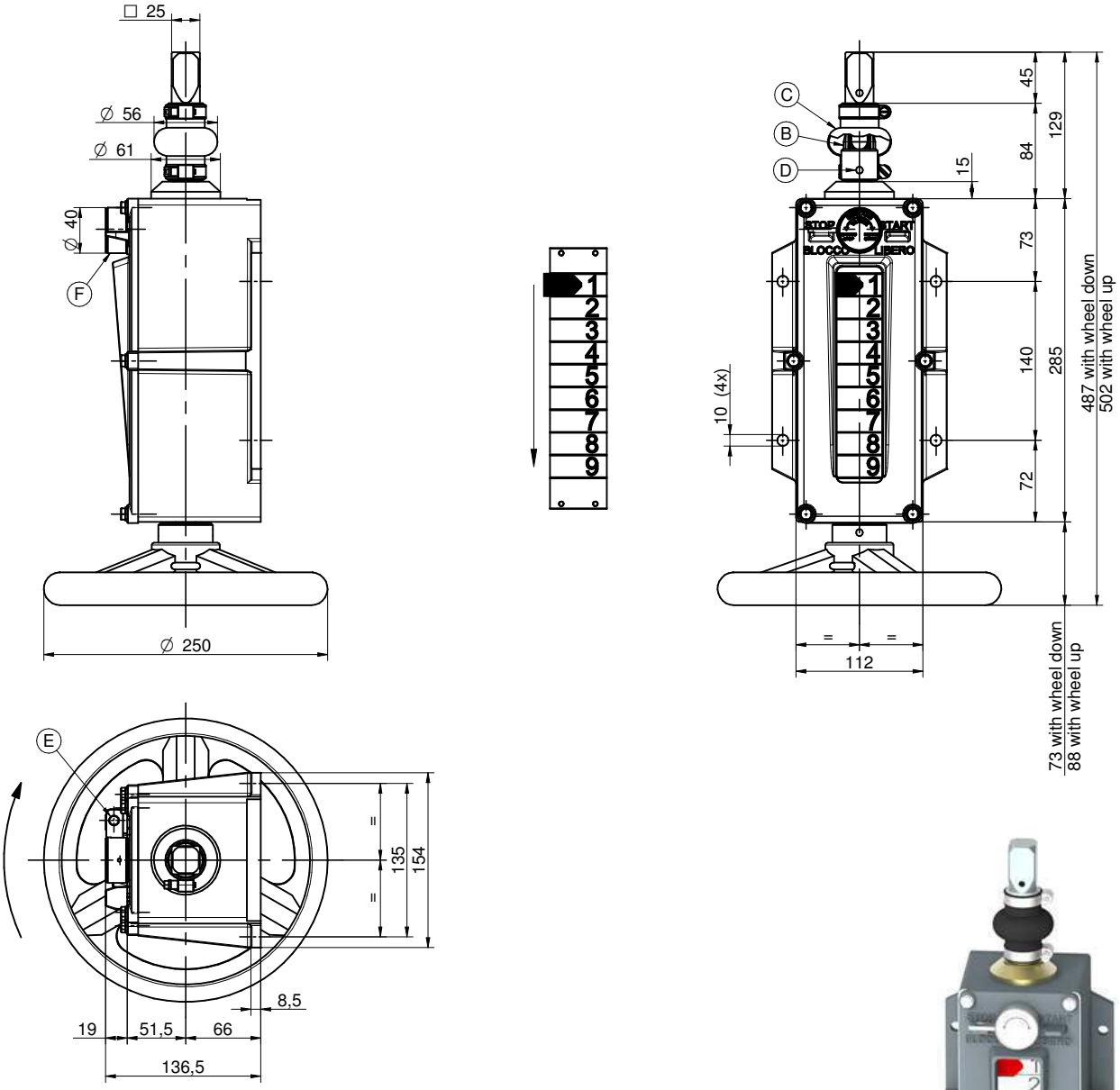

- Standard drive can be used at max. 9 positions.
- Standard type with 1 turn of 360° for each position.
- Special type with 2 or more turns.
- Standard paint RAL 7031.

B) Precision joints.

C) Rubber protections.

D) Hole for pin ø6 to be drilled during the final assembling of the transformer.

E) Hole ø6,5 for padlock.

F) Mechanical block with padlock.

DRIVE TYPE 070-1.12.201BE

- DRIVE WITH CHANGEOVER CONTACT AND FACILITIES FOR LOCKING LOCATED ON TRANSFORMER TANK WALL

Dimension in mm

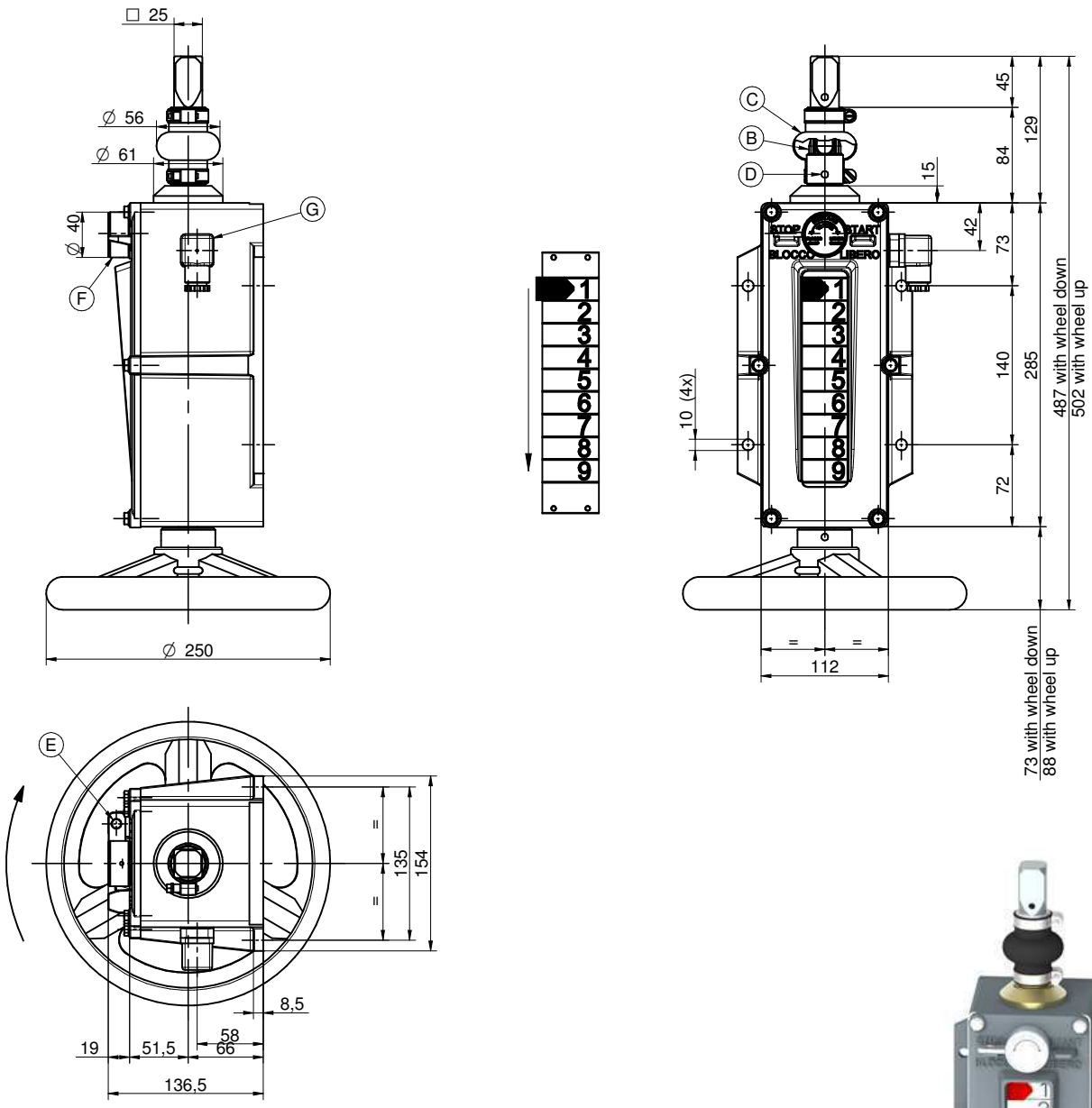

- Standard drive can be used at max. 9 positions.
- Standard type with 1 turn of 360° for each position.
- Special type with 2 or more turns.
- Standard paint RAL 7031.

B) *Precision joints.*

C) *Rubber protections.*

D) *Hole for pin ø6 to be drilled during the final assembling of the transformer.*

E) *Hole ø6,5 for padlock.*

F) *Mechanical block with padlock.*

G) *Microswitch 6 A - 250V (NO - NC) for consent switches handling cables exit DIN 43650/PG9. it starts working at the initial handling wheel.*

DRIVE TYPE 070-1.12.202 and 070-1.12.202BE

- DRIVE WITH CHANGEOVER CONTACT, FACILITIES FOR LOCKING AND POSITION TRANSMITTER

Dimension in mm

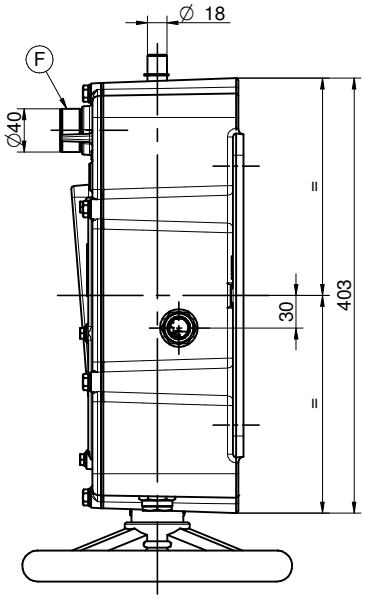

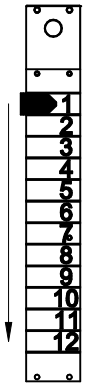

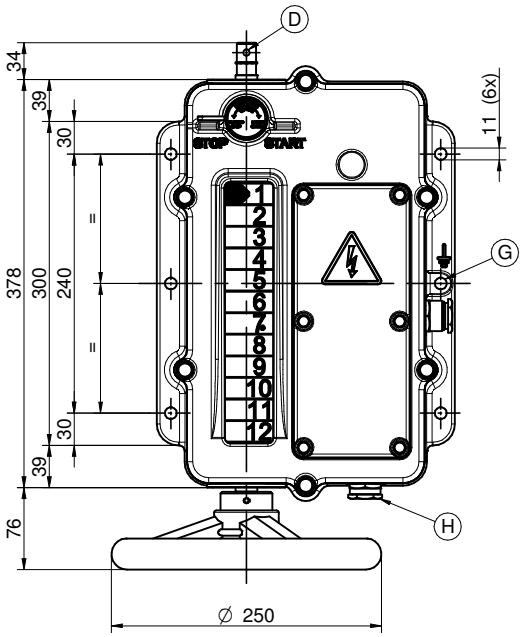

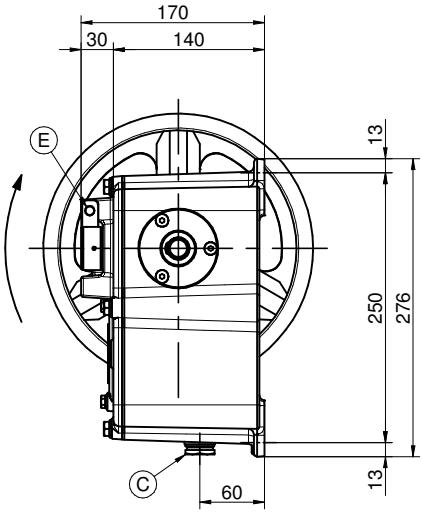

C) *Cable gland 3/4" GAS.*
D) *Hole for pin ø6 to be drilled during the final assembling of the transformer.*
E) *Hole ø6,5 for padlock.*
F) *Mechanical block with padlock.*
G) *Earthing terminal hole.*
H) *Condensate drain plug.*

- Standard drive can be used at max. 12 positions.
- Standard type with 1 turn of 360° for each position.
- Special type with 2 or more turns.
- Standard paint RAL 7031.

FITTINGS ON REQUEST:
1) Electromagnet locking the handwheel.
2) Green lamp for auxliary voltage.
3) Micro-switches series connected to electrical block in case of 3 or more turns for each position (070-1.12.202BE).
4) Second micro-switch for electrical block.
5) Special accessories.

DRIVE TYPE 070-1.12.202-2

- DRIVE WITH CHANGEOVER CONTACT, FACILITIES FOR LOCKING AND POSITION TRANSMITTER
- SPECIFIC FOR TAP-CHANGER WITH TWO TURNS OF WHEEL FOR EACH POSITION

Dimension in mm

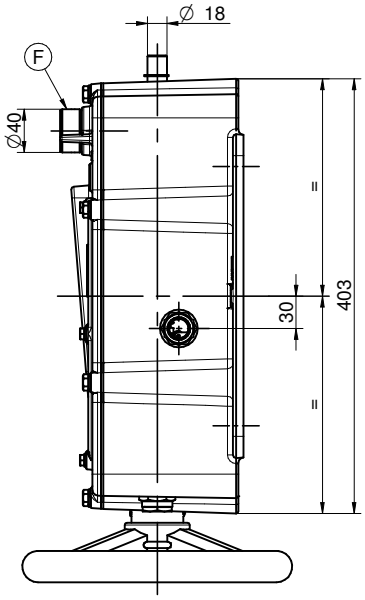

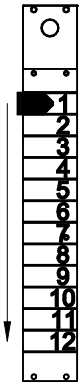

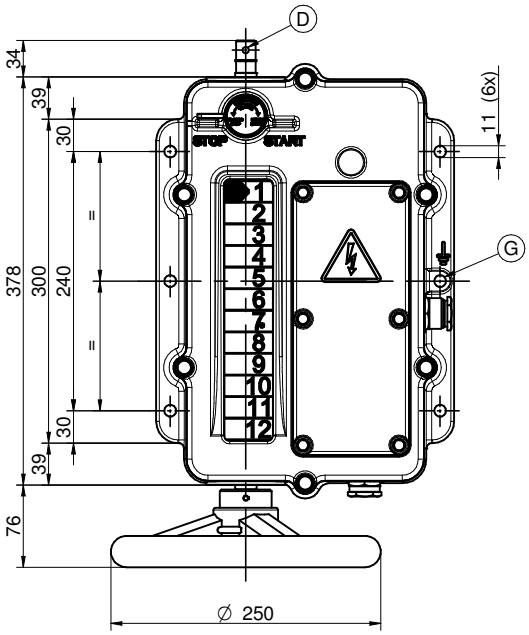

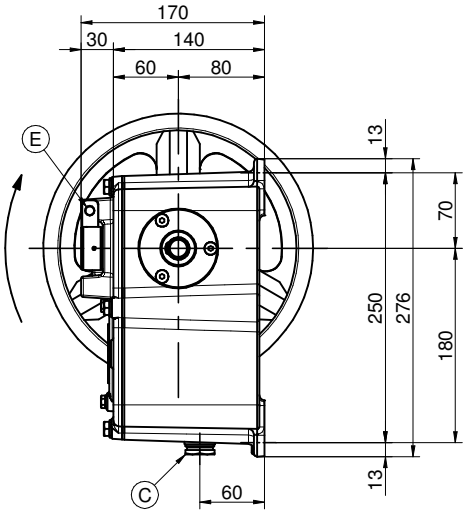

C) *Cable gland 3/4" GAS.*
D) *Hole for pin ø6 to be drilled during the final assembling of the transformer.*
E) *Hole ø6,5 for padlock.*
F) *Mechanical block with padlock.*
G) *Earthing terminal hole.*
H) *Condensate drain plug.*

- *Standard drive can be used at max. 12 positions.*
- *Standard type with 2 turns of 360° for each position.*
- *Standard paint RAL 7031.*

FITTINGS ON REQUEST:
1) Green lamp for auxliary voltage.
2) Special accessories.

DRIVE TYPE 070-1.12.208

- CONTROL BOX DETAIL LOCATED ON TRANSFORMER TANK WALL

Dimension in mm

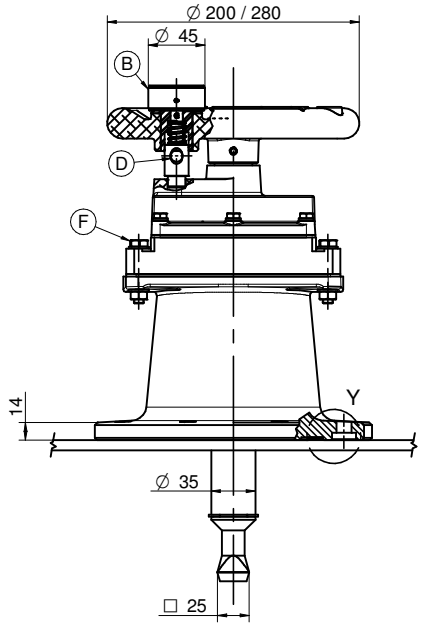

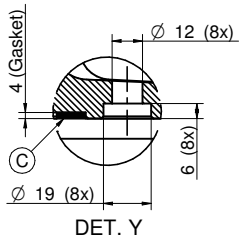

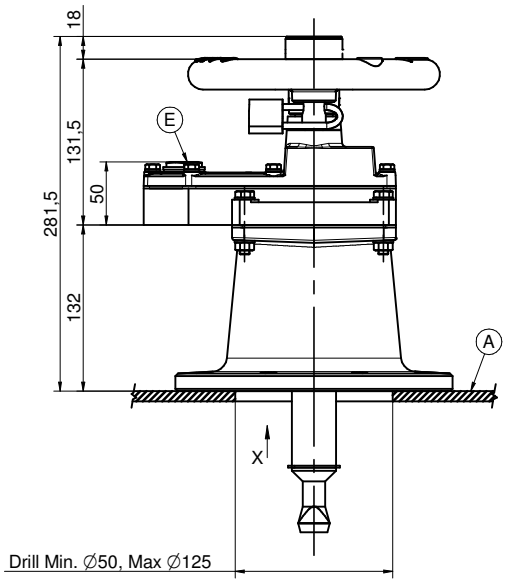

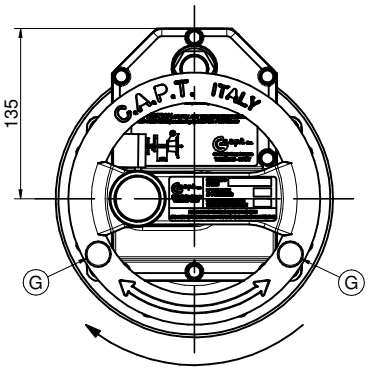

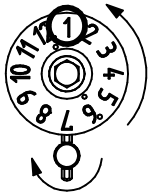

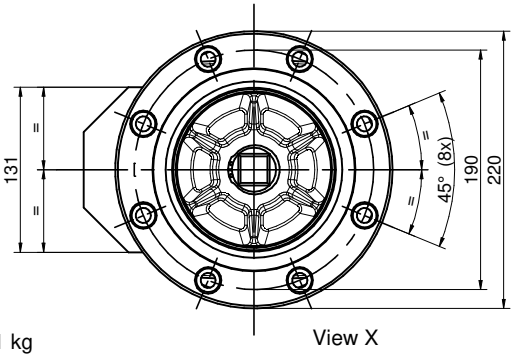

Weight: ~9,1 kg

View X

- Standard drive can be used at max. 12 positions.
- Standard type with 1 turn of 360° for each position.
- Special type with 2 or more turns.
- Standard paint RAL 7031.

A) Transformer tank wall.

B) Mechanical block with padlock.

C) Flat gasket 4 mm thickness.

D) Hole ø9,5 for padlock.

E) Numbering window.

F) Transformer active part can be removed after unscrewing the M8 four bolts "E" and pulling out, for 120 mm, wheel and numbering box.

G) Signs +/- (or others) for raising and lowering tap position have to be engraved by transformer manufacturer.

DRIVE TYPE 070-1.12.209

- CONTROL BOX DETAIL LOCATED ON TRANSFORMER TANK WALL WITH CHANGEOVER CONTACT

Dimension in mm

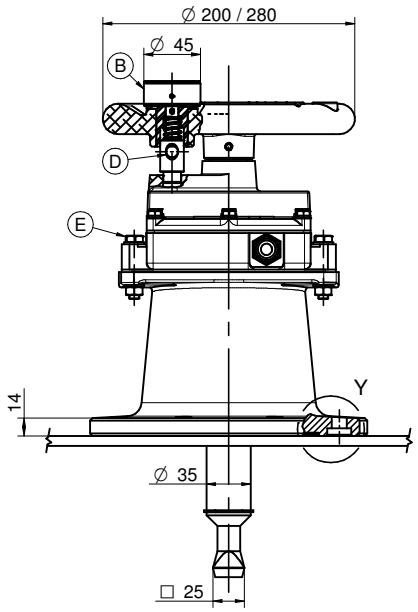

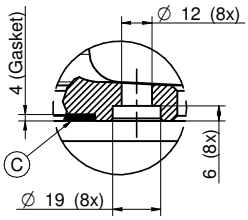

DET. Y

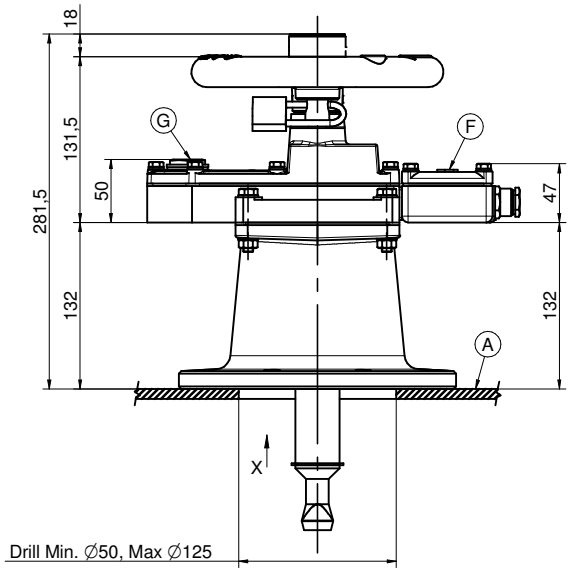

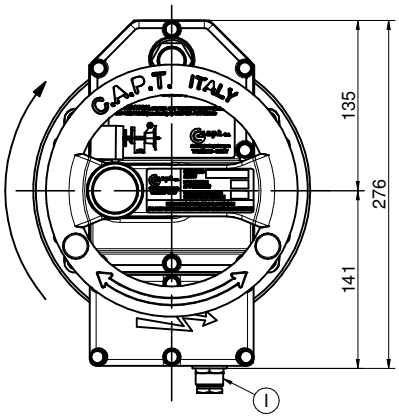

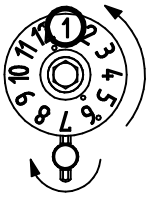

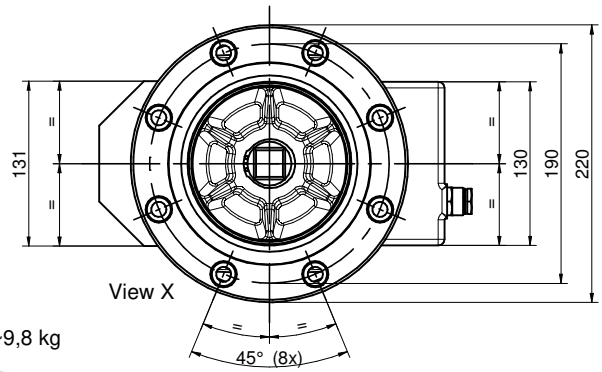

View X

Weight: ~9,8 kg

- Standard drive can be used at max. 12 positions.
- Standard type with 1 turn of 360° for each position.
- Special type with 2 or more turns.
- Standard paint RAL 7031.

A) *Transformer tank wall.*
B) *Mechanical block with padlock.*
C) *Flat gasket 4 mm thickness.*
D) *Hole ø9,5 for padlock.*
E) *Transformer active part can be removed after unscrewing the M8 four bolts "E" and pulling out, for 120 mm, wheel and numbering box.*
F) *Terminal board box for micro-switch of electrical block.*
G) *Numbering window.*
H) *Signs +/- (or others) for raising and lowering tap position have to be engraved by transformer manufacturer.*
I) *Cable gland PG 13,5.*

DRIVE TYPE 070-1.12.210

- DRIVE WITH CHANGEOVER CONTACT, FACILITIES FOR LOCKING AND POSITION TRANSMITTER

Dimension in mm

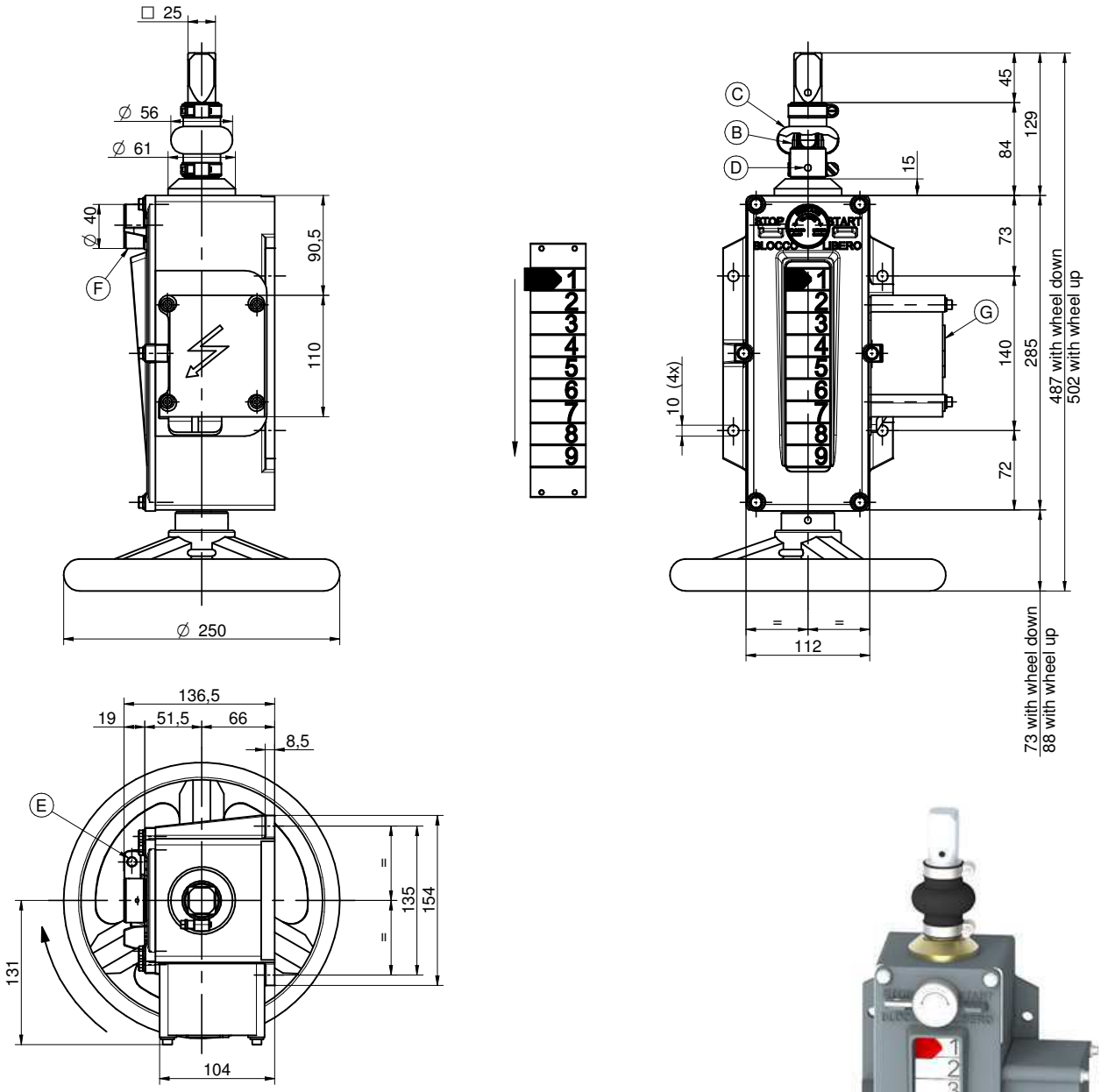

- Standard drive can be used at max. 9 positions.
- Standard type with 1 turn of 360° for each position.
- Special type with 2 or more turns.
- Standard paint RAL 7031.

B) *Precision joints.*

C) *Rubber protections.*

D) *Hole for pin ø6 to be drilled during the final assembling of the transformer.*

E) *Hole ø6,5 for padlock.*

F) *Mechanical block with padlock.*

G) *Terminal board box for electrical block and positions transmitter.*

DRIVE TYPE 070-1.12.408

- DRIVE WITH EXIT ON UPPER PART OF TRANSFORMER TANK WALL

Dimension in mm

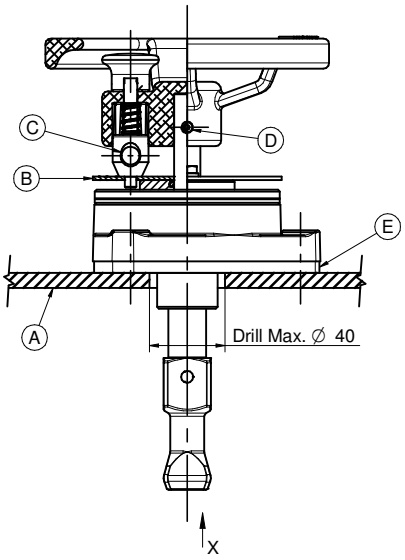

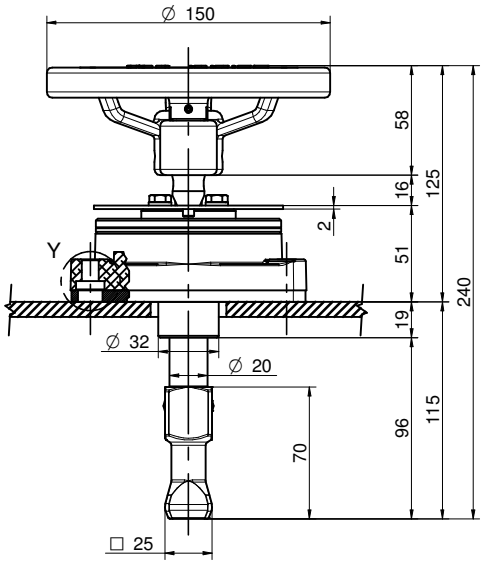

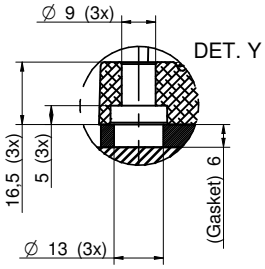

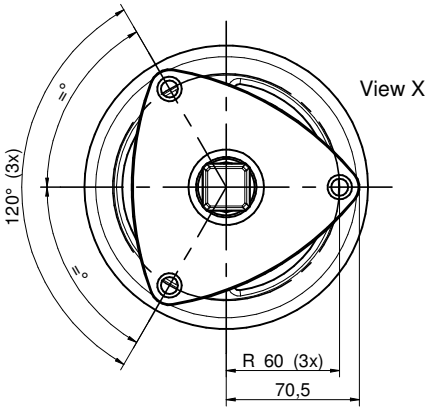

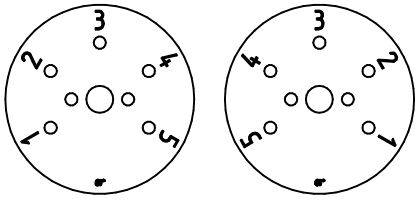

Positioning disk supplied numbered on both sides.

Weight: ~2,2 kg

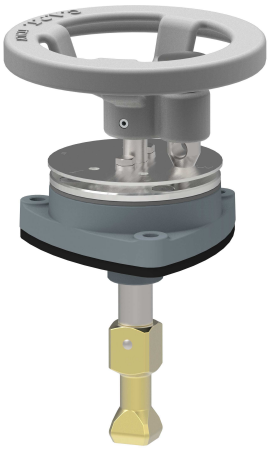

- For the angle of movement of a position see its design of the switch.
- Standard paint RAL 7031.

A) *Transformer tank wall.*

B) *Inox steel numbered disc ø100 mm.*

C) *Hole Ø9,5 for padlock with shackle thickness Ø min: 5, Ø Max: 9.*

D) *Hole for pin ø6 to be drilled during the final assembling of the transformer.*

E) *Flat gasket 6 mm thickness.*

DRIVE TYPE 070-1.12.409

- DRIVE WITH EXIT ON LOWER PART OF TRANSFORMER TANK WALL

Dimension in mm

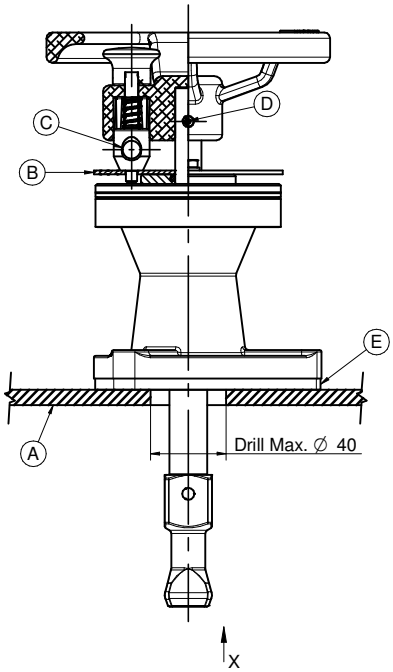

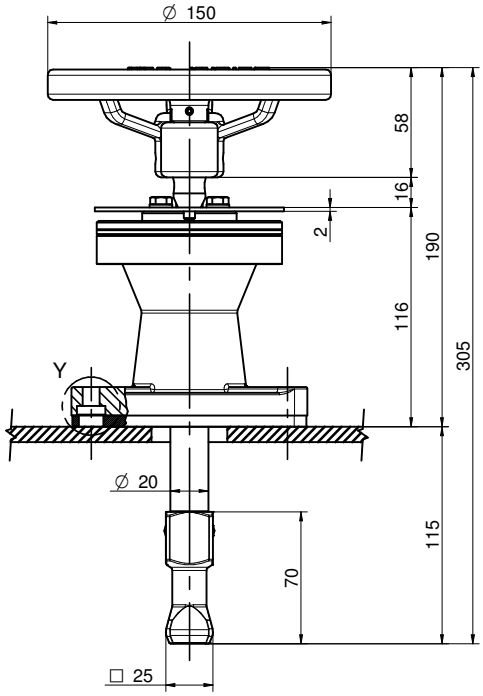

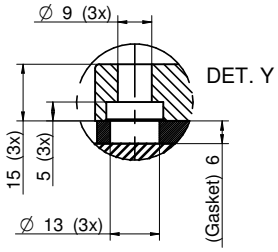

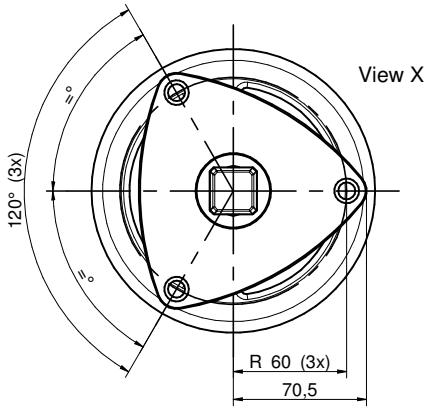

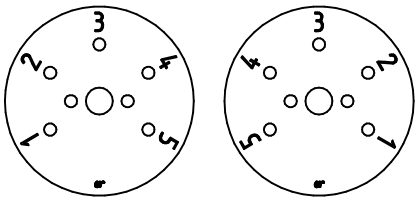

Positioning disk supplied numbered on both sides.

Weight: ~2,7 kg

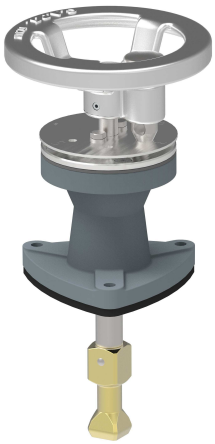

- For the angle of movement of a position see its design of the switch.
- Standard paint RAL 7031.

A) *Transformer tank wall.*

B) *Inox steel numbered disc ø100 mm.*

C) *Hole Ø9,5 for padlock with shackle thickness Ø min: 5, Ø Max: 9.*

D) *Hole for pin ø6 to be drilled during the final assembling of the transformer.*

E) *Flat gasket 6 mm thickness.*

DRIVE TYPE 070-1.12.501

- DRIVE WITH FACILITIES FOR LOCKING LOCATED ON THE TRANSFORMER TANK WALL

Dimension in mm

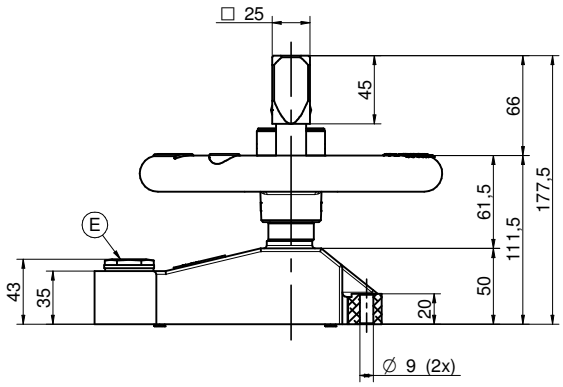

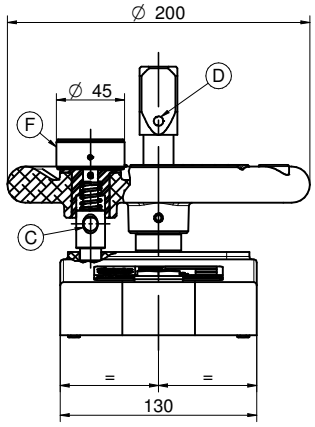

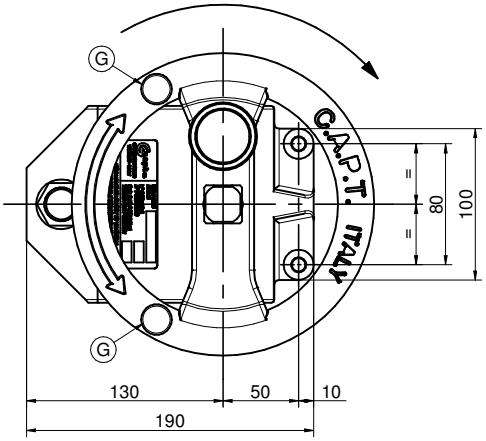

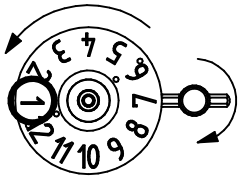

Weight: ~3,1 kg

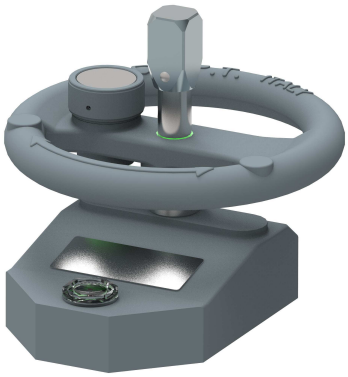

- Drive can be used at max. 12 positions.
- Standard type with 1 turn of 360° for each position.
- Special type with 2 or more turns.
- Standard paint RAL 7031.

C) *Hole ø9,5 for padlock.*

D) *Hole for pin ø6 to be drilled during the final assembling of the transformer.*

E) *Numbering window.*

F) *Mechanical block with padlock.*

G) *Signs +/- (or others) for raising and lowering tap position have to be engraved by transformer manufacturer.*

DRIVE TYPE 070-1.12.502

- DRIVE WITH CHANGEOVER CONTACT AND FACILITIES FOR LOCKING LOCATED ON THE TRANSFORMER TANK WALL

Dimension in mm

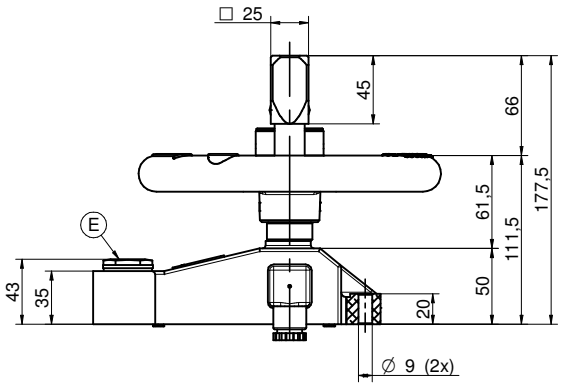

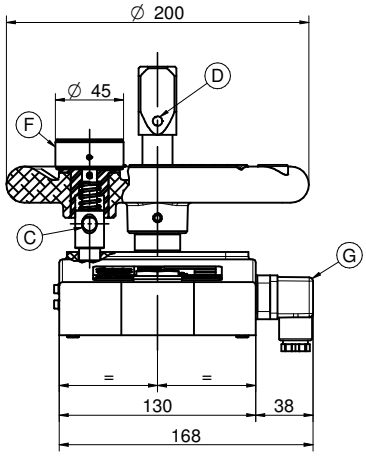

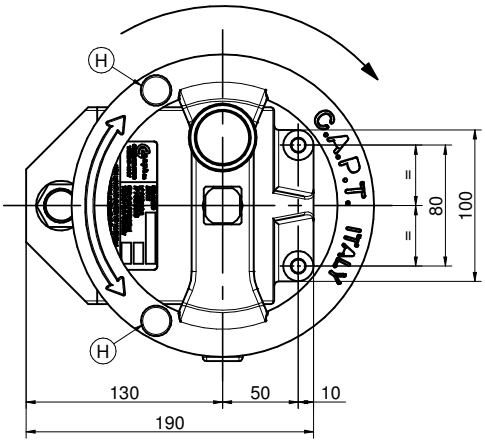

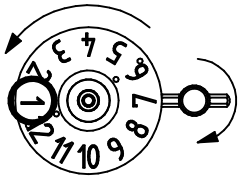

Weight: ~3,2 kg

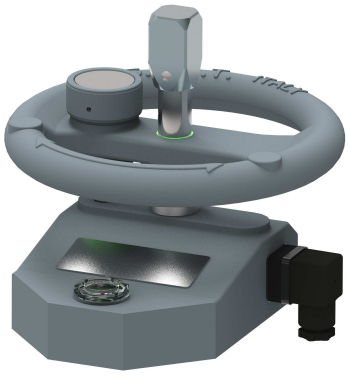

- Drive can be used at max. 12 positions.
- Standard type with 1 turn of 360° for each position.
- Special type with 2 or more turns.
- Standard paint RAL 7031.

C) *Hole ø9,5 for padlock.*

D) *Hole for pin ø6 to be drilled during the final assembling of the transformer.*

E) *Numbering window.*

F) *Mechanical block with padlock.*

G) *Microswitch 6 A - 250V (NO - NC) for consent switches handling cables exit DIN 43650/PG9. it starts working at the initial handling wheel.*

H) *Signs +/- (or others) for raising and lowering tap position have to be engraved by transformer manufacturer.*

FRICTION TYPE 070-1.12.211

- FRICTION CONE

Dimension in mm

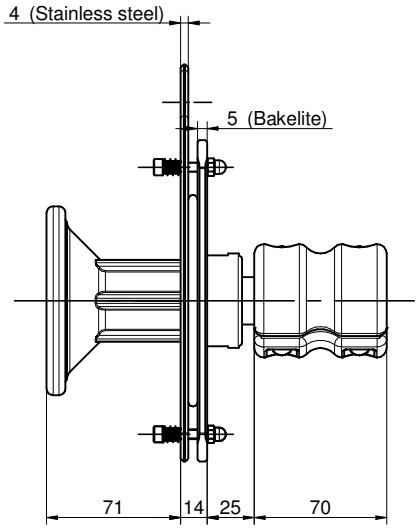

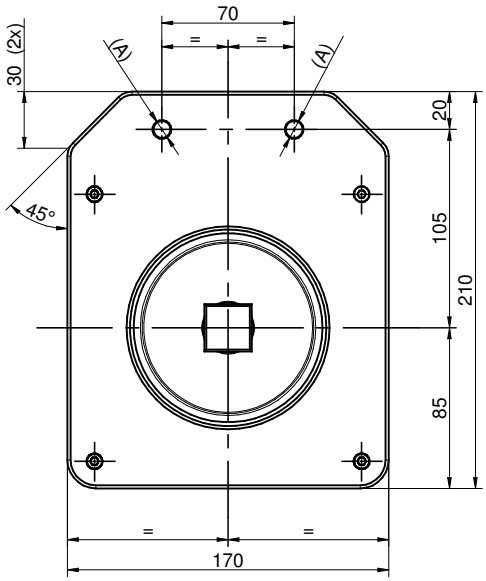

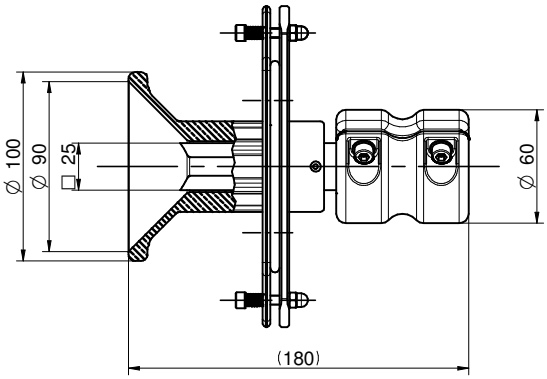

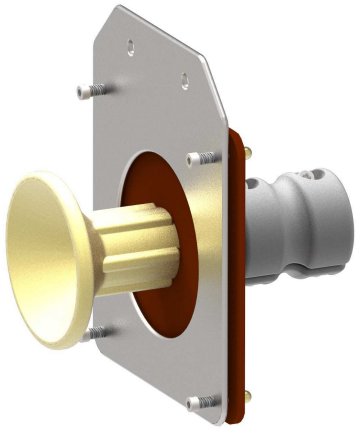

***A**) Holes Ø9 for fixing to the bracket linked at the magnetic core clamp.*

Alignment: drive shaft and tap changer shaft axis can be radial displaced maximum 23 mm (INSULATED).

Angle: tap changer shaft can have an angle error of 10° maximum.

Gap: standard distance between tank wall and friction cone is 60 mm.
This friction permit a tolerance of ±10 mm.

BEVEL GEAR TYPE 070-1.12.106

- BEVEL GEAR 90°
- ONLY FOR OIL IMMERSED INTERNAL ASSEMBLING

Dimension in mm

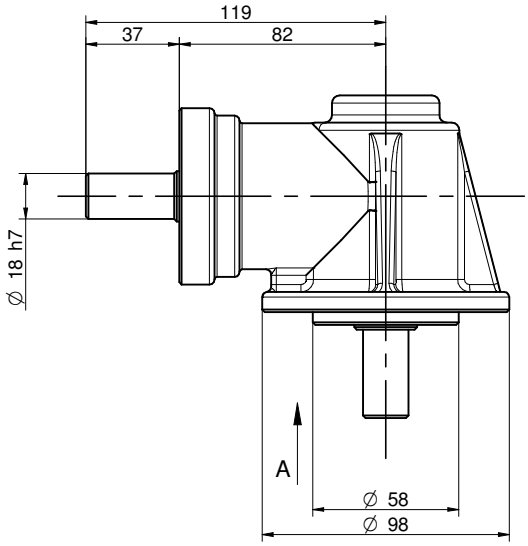

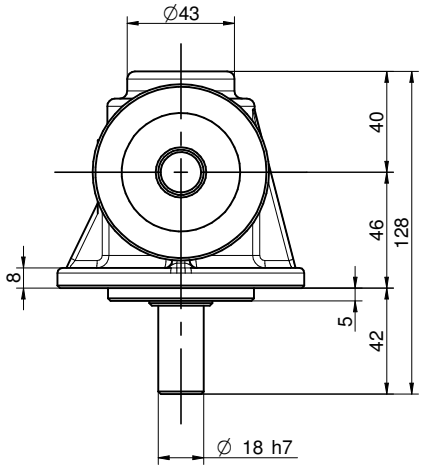

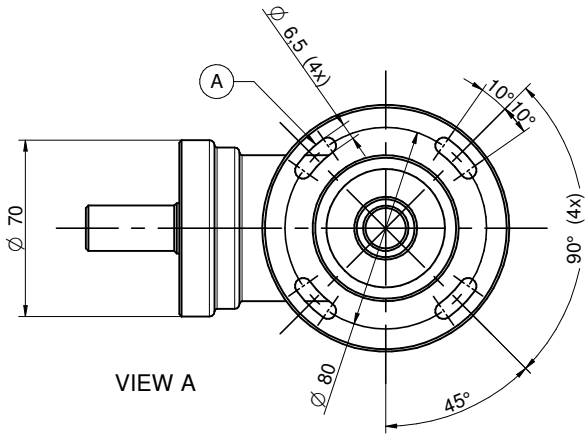

VIEW A

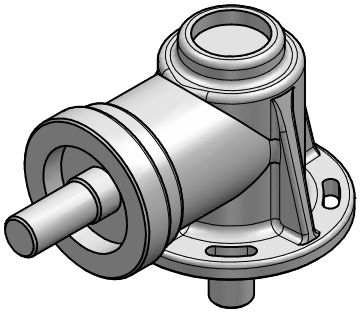

- *Bevel gear, made of aluminium casting.*

- *Fixing on tap-changer support or with separate clamp.*

A) Slots for the alignment correction of transmissions.

BEVEL GEAR TYPE 070-1.12.203

- BEVEL GEAR 90°

Dimension in mm

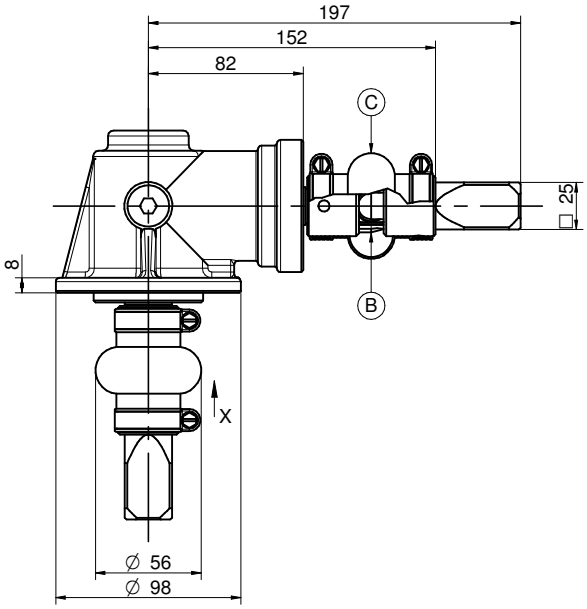

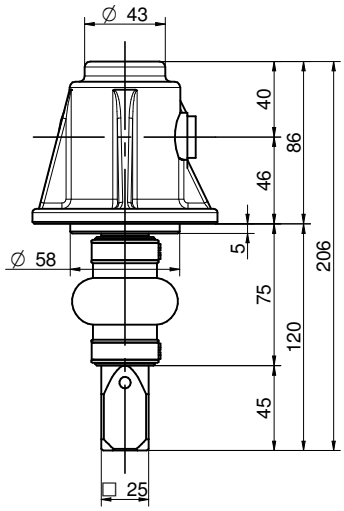

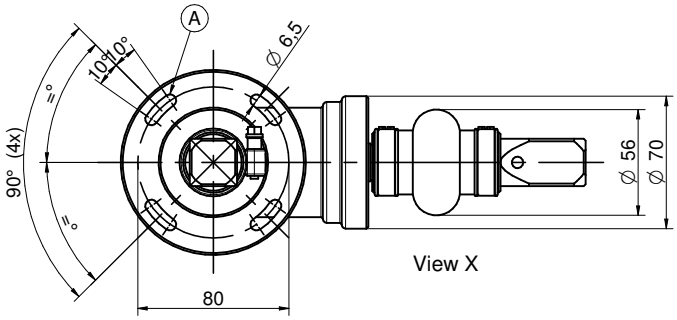

- Bevel gear, made af aluminium casting - Guards for seal rings - With two precision joints with rubber protections.
- Standard paint RAL 7031.

A) *Slots for the alignment correction of transmissions.*

B) *Precision joints.*

C) *Rubber protections.*

BEVEL GEAR TYPE 070-1.12.204

- BEVEL GEAR 90° WITH POSITION REPEATER LOCATED ON THE TRANSFORMER COVER

Dimension in mm

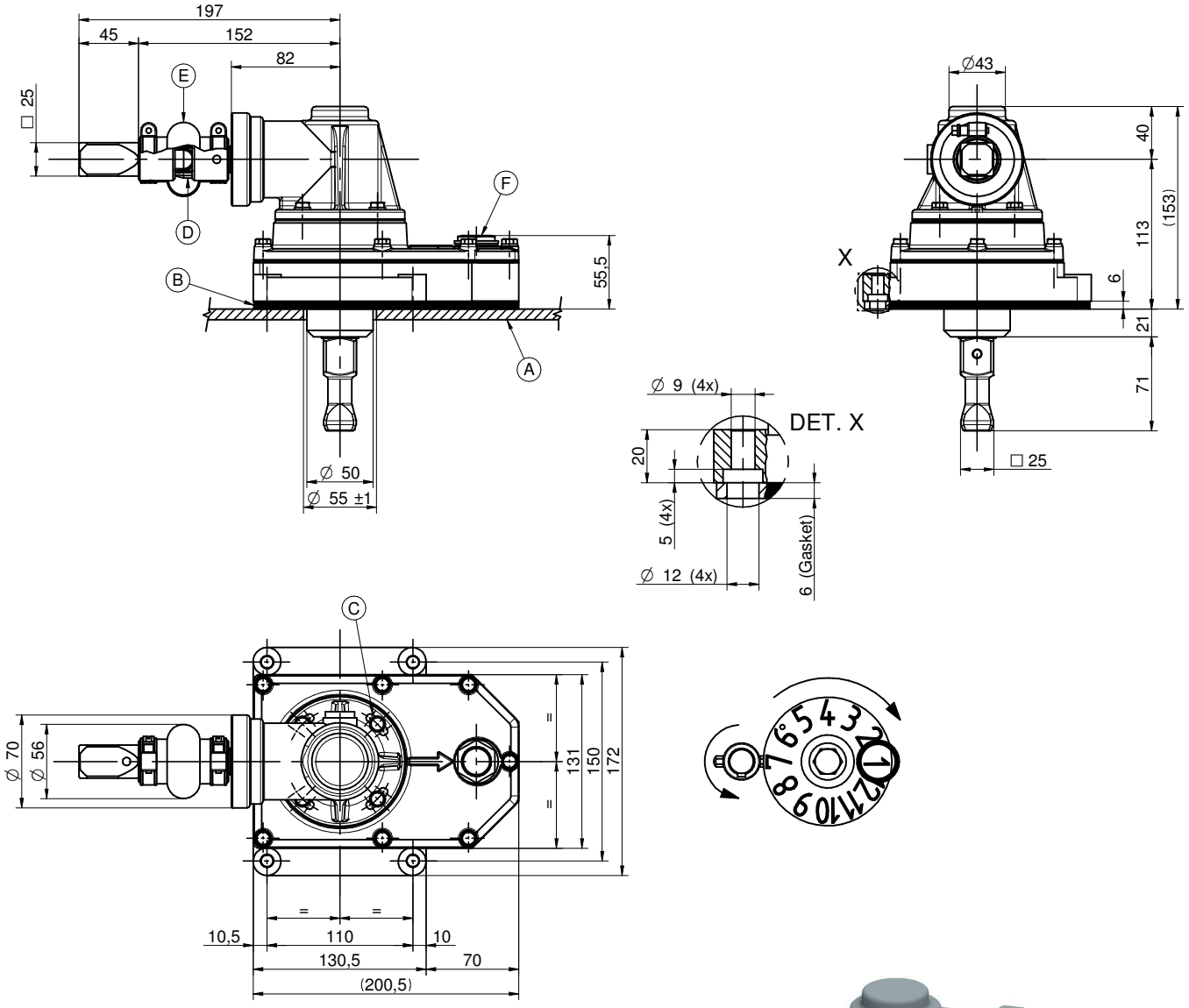

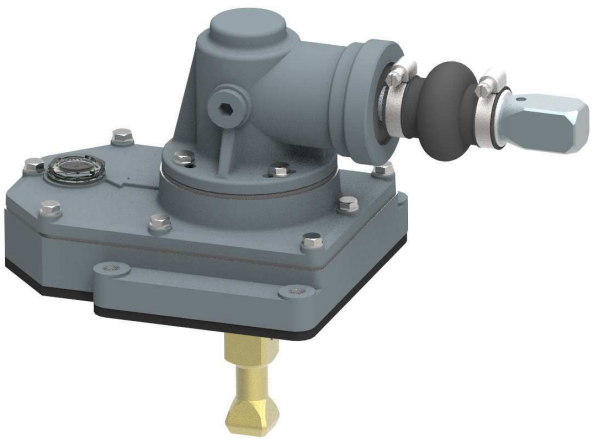

- Standard bevel gear can be used at max. 12 positions.
- Standard type with 1 turn of 360° for each position.
- Special type with 2 or more turns.
- Standard paint RAL 7031.

A) *Transformer tank lid.*

B) *Flat gasket 6 mm thickness.*

C) *Slots for the alignment correction of transmissions.*

D) *Precision joints.*

E) *Rubber protections.*

F) *Numbering window.*

BEVEL GEAR TYPE 070-1.12.205

- BEVEL GEAR 90° WITH POSITION REPEATER LOCATED ON TRANSFORMER TANK WALL

Dimension in mm

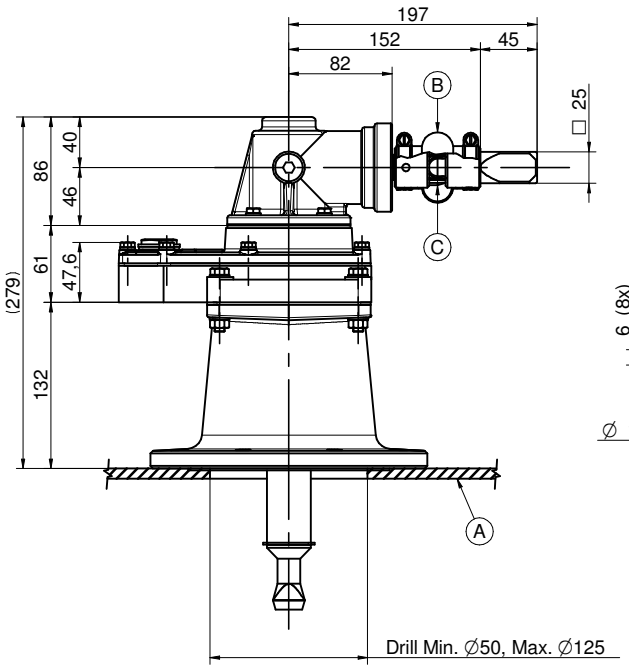

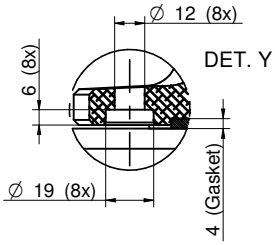

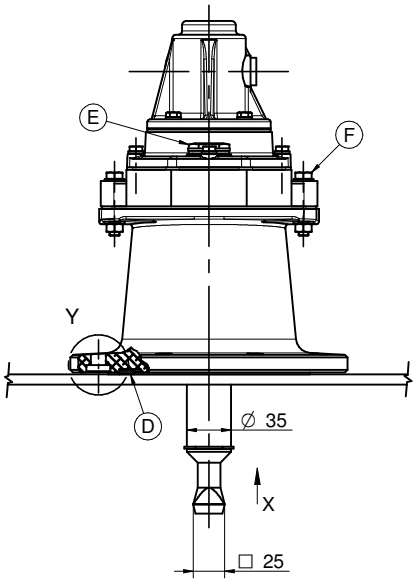

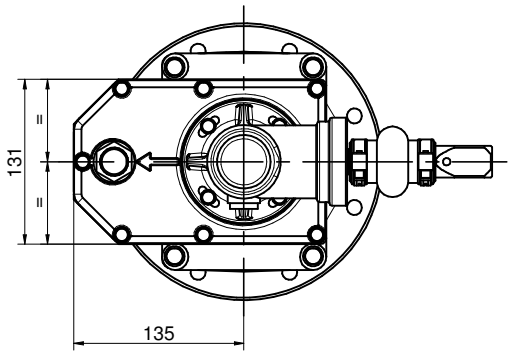

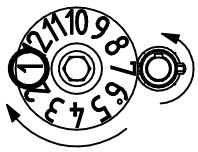

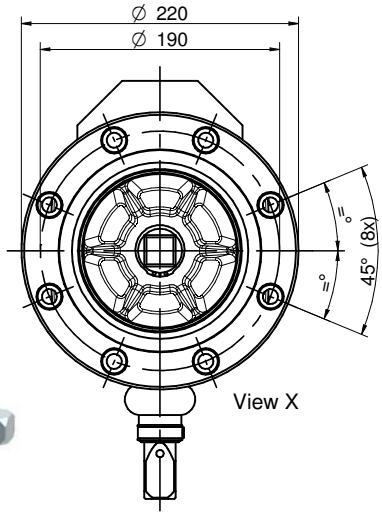

- Standard bevel gear can be used at max. 12 positions.
- Standard type with 1 turn of 360° for each position.
- Special type with 2 or more turns.
- Standard paint RAL 7031.

A) *Transformer tank wall.*
B) *Rubber protections.*
C) *Precision joints.*
D) *Flat gasket 6 mm thickness.*
E) *Numbering window.*
F) *Transformer active part can be removed after unscrewing the M8 four bolts "F" and pulling out, for 120 mm, bevel gear and numbering box.*

BEVEL GEAR TYPE 070-1.12.405

- BEVEL GEAR 90° FOR ASSEMBLING ON COVER AND ON WALL

Dimension in mm

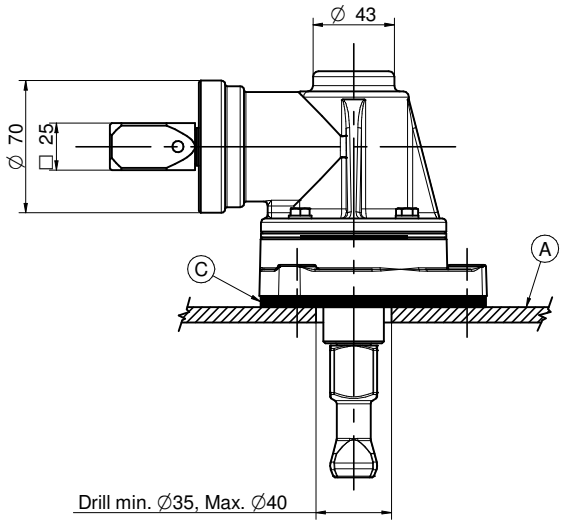

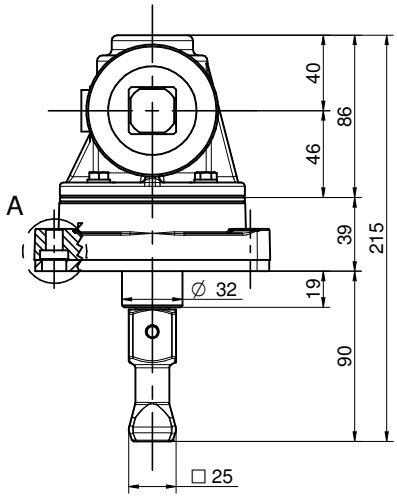

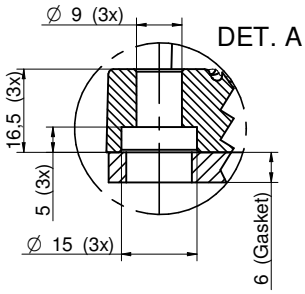

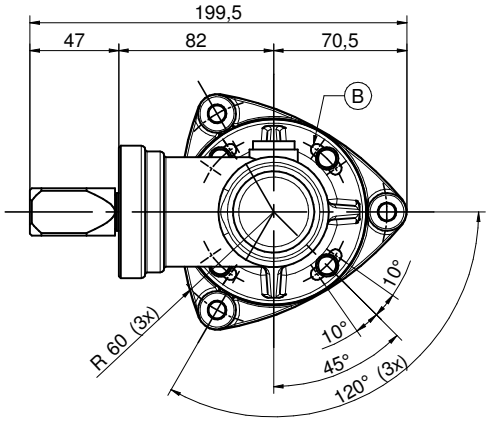

- Standard paint RAL 7031.

A) *Transformer tank lid / wall.*

B) *Slots for the alignment correction of transmissions.*

C) *Flat gasket 6 mm thickness.*

D) *The dimension is 55 mm when assembled on lid. It's 70 mm, like drawing, when assembled on vertical wall for the clutch into friction cone 1.12.211.*

BEVEL GEAR TYPE 070-1.12.503

- BEVEL GEAR 90°

Dimension in mm

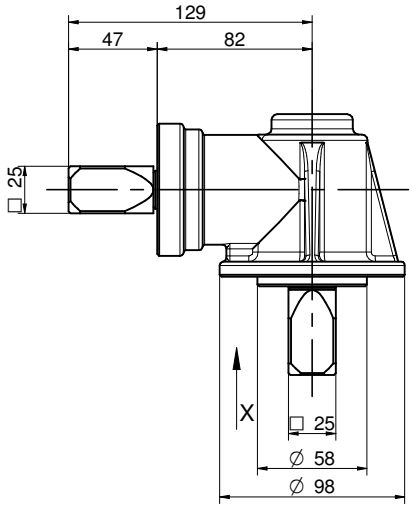

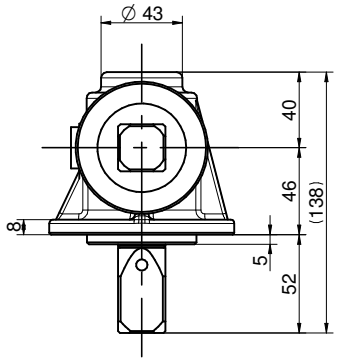

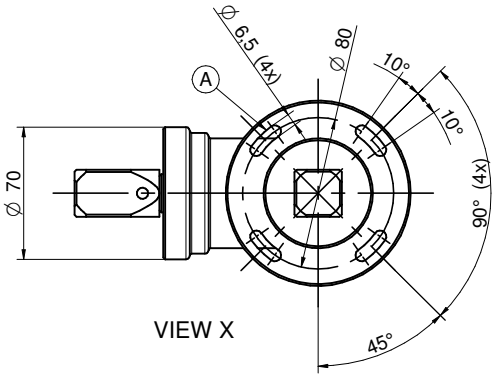

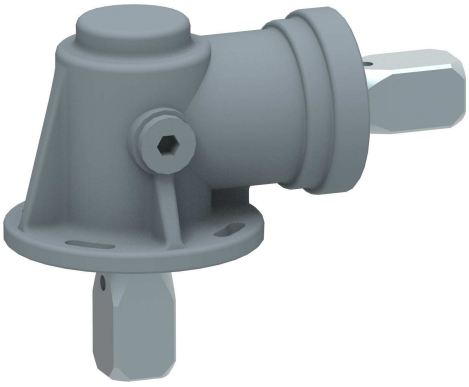

- Bevel gear, made of aluminium casting - Guards for seal rings.
- Standard paint RAL 7031.

A) *Slots for the alignment correction of transmissions.*

BEVEL GEAR TYPE 070-1.12.506

- BEVEL GEAR 90° LOCATED ON TRANSFORMER TANK WALL

Dimension in mm

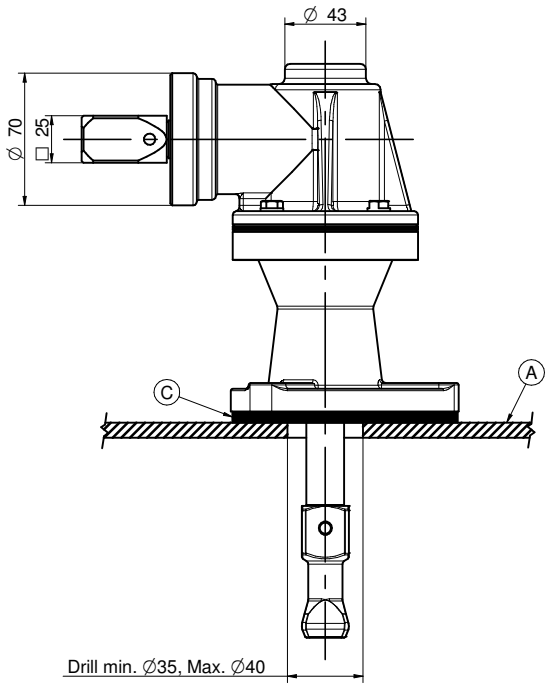

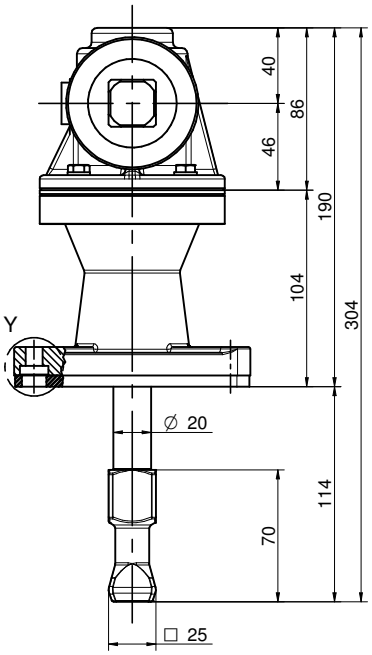

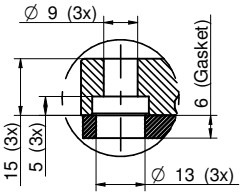

DET. Y

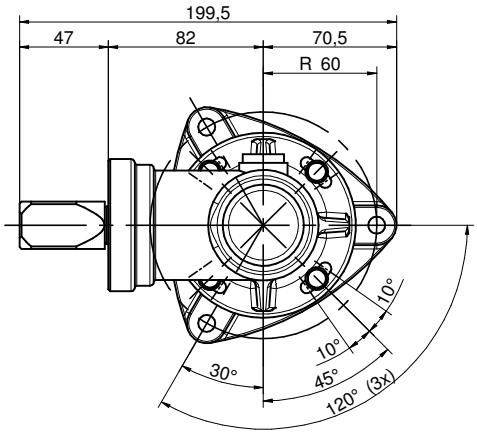

- Standard paint RAL 7031.

A) *Transformer tank wall.*

B) *Slots for the alignment correction of transmissions.*

C) *Flat gasket 6 mm thickness.*

MOTOR DRIVE TYPE 070-1.12.310

- STANDARD DRIVE CAN BE USED AT MAX. 15 POSITIONS
- STANDARD PAINT RAL 7035
- STANDARD POWER SUPPLY THREE PHASE 400 V - 50/60 Hz
- TOTAL WEIGHT 110 Kg

Dimension in mm

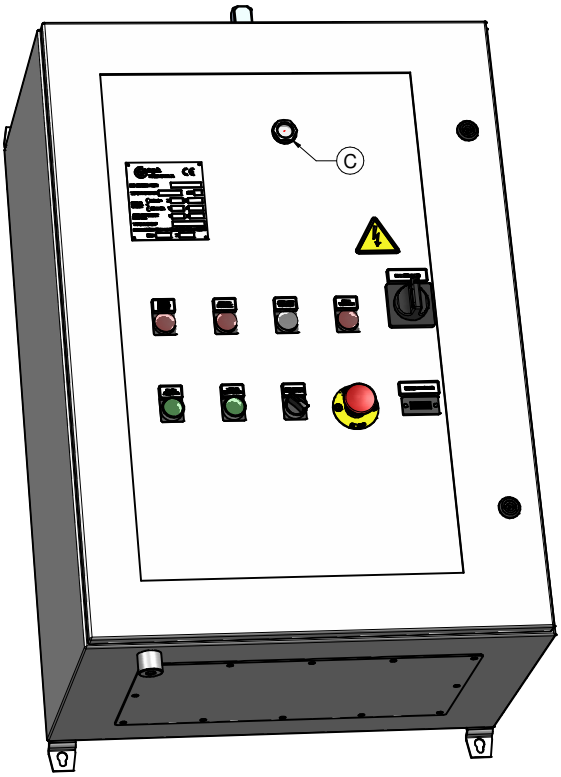

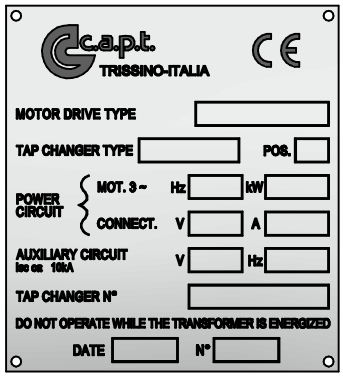

NAMEPLATE DETAIL

A) Self braking motor
B) Gear motor made by C.A.P.T.
C) Numbering window

DETAIL OF CONTROL PANEL

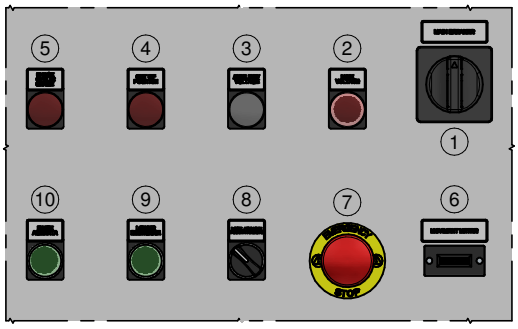

1) Main breaker
2) Main power signaling red lamp
3) Ausiliary voltage signalling white lamp
4) Out of position signaling red lamp
5) Phase cyclic sense signaling red lamp
6) Manoeuvre counter
7) Emergency pushbutton
8) Selector (Local / Remote)
9) Green luminous pushbutton (Lower)
10) Green luminous pushbutton (Raise)

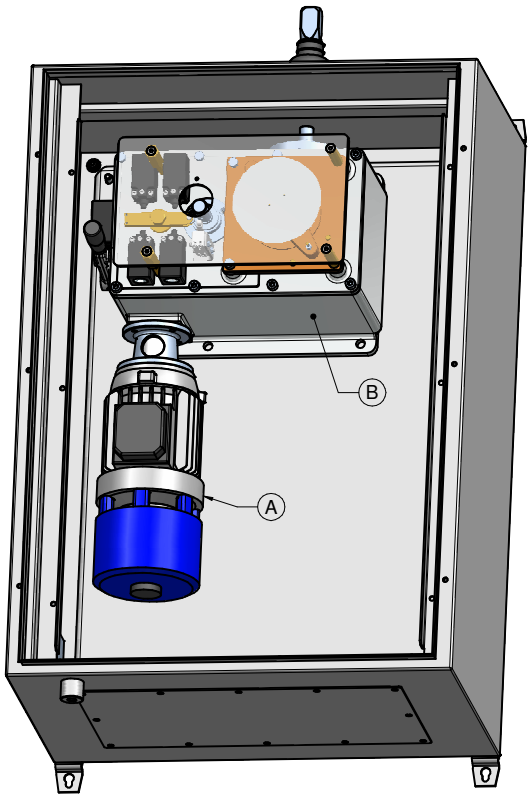

MOTOR DRIVE TYPE 070-1.12.310

- LAYOUT

Dimension in mm

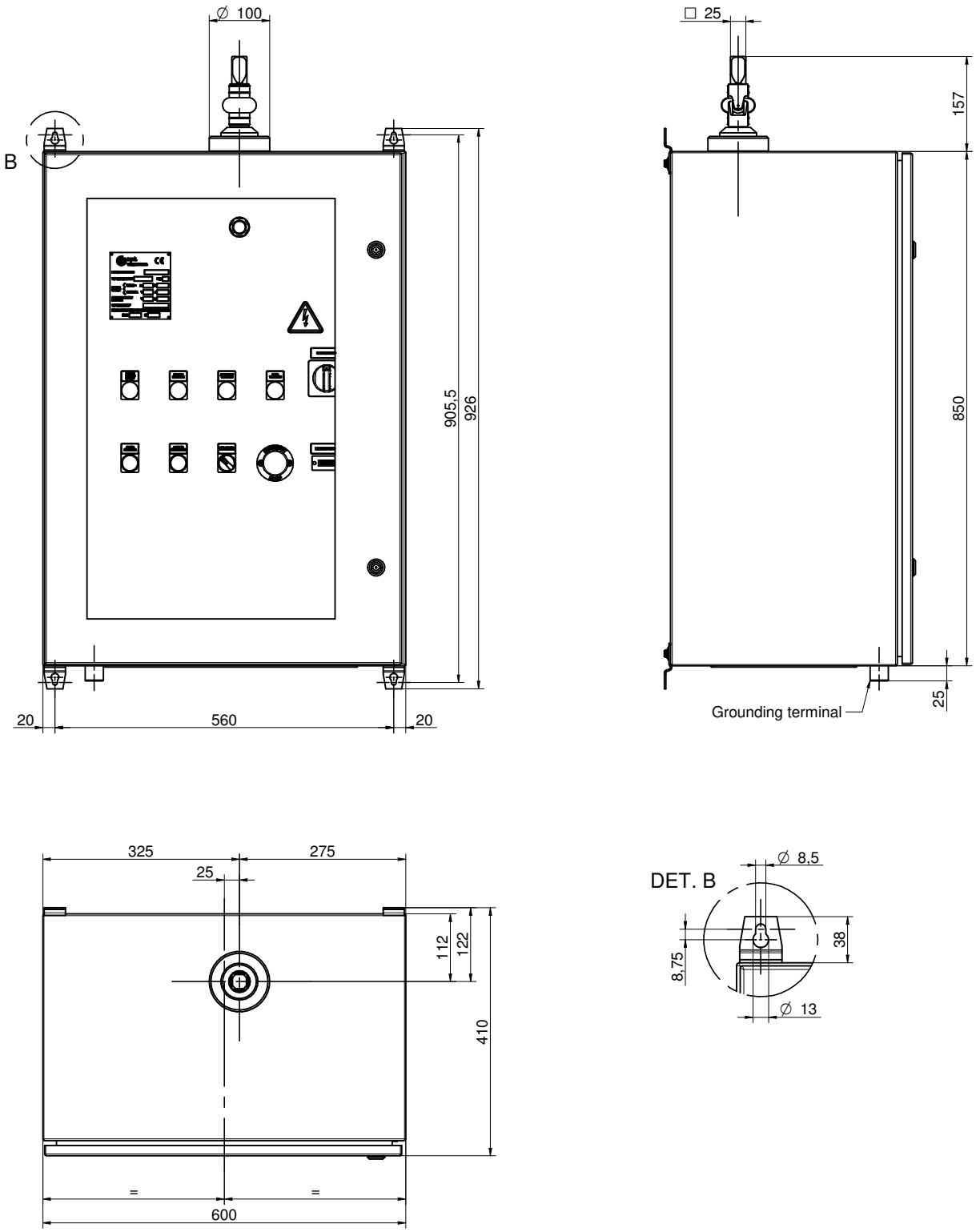

c.a.p.t. s.r.l.
de-energized tap changers

070-1.12.310-02
Rev. 01 - 04/03/2015

REMOTE CONTROL BOX TYPE 070-1.12.350

- FOR MOTOR DRIVE 070-1.12.310

Dimension in mm

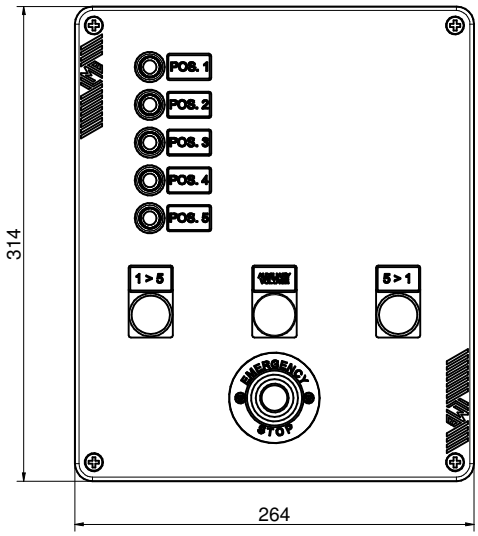

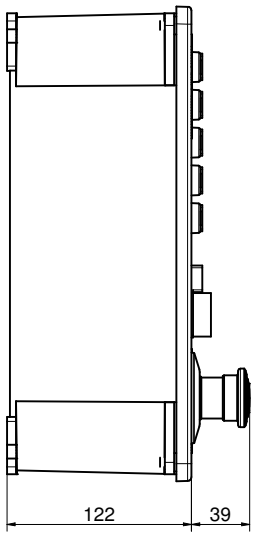

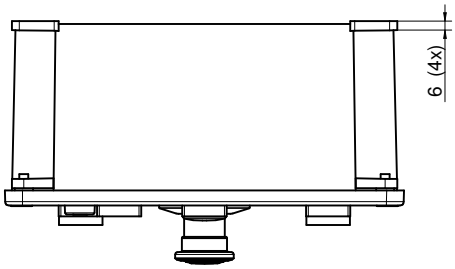

- *Box material:* **Aluminum alloy**
- *Box paint:* **RAL 7040**