On-load tap-changer VACUTAP® VV-Ex

Installation and commissioning instructions

4983703/01 EN

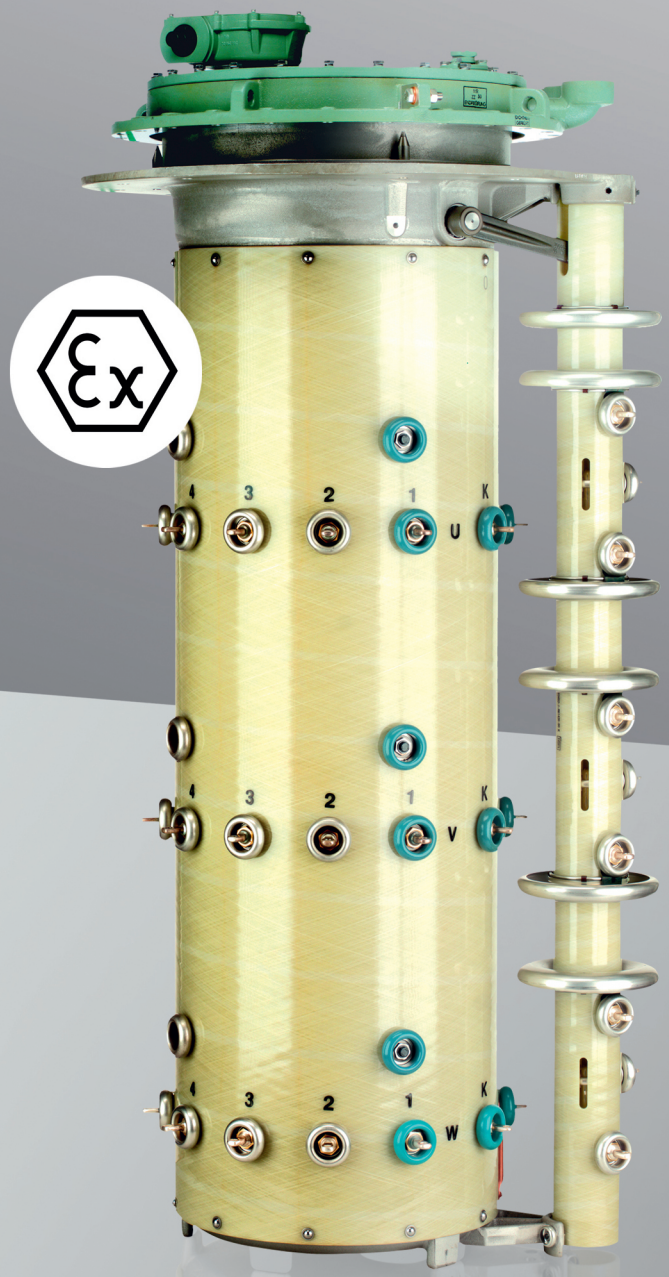

The original operating instructions were written in German.

Table of contents

1 Introduction

This technical file contains detailed descriptions of the safe and proper installation, connection, and commissioning of the product.

It also includes safety instructions and general information about the product.

Information about operation can be found in the operating instructions.

This technical file is intended solely for specially trained and authorized personnel.

1.1 Manufacturer

The product is manufactured by:

Maschinenfabrik Reinhausen GmbH

Falkensteinstraße 8
93059 Regensburg
Tel.: (+49) 9 41/40 90-0
E-mail: sales@reinhausen.com

Further information on the product and copies of this technical file are available from this address if required.

1.2 Completeness

This technical file is incomplete without the supporting documents.

The following documents are considered supporting documents:

- Unpacking instructions
- Supplement
- Routine test report
- Connection diagrams
- Dimensional drawings
- Order confirmation

1.3 Safekeeping

Keep this technical file and all supporting documents ready at hand and accessible for future use at all times.

1.4 Notation conventions

1.4.1 Hazard communication system

Warnings in this technical file are displayed as follows.

1.4.1.1 Warning relating to section

Warnings relating to sections refer to entire chapters or sections, sub-sections or several paragraphs within this technical file. Warnings relating to sections use the following format:

⚠ WARNING **Type of danger!**

Source of the danger and outcome.

▶ Action

▶ Action

1.4.1.2 Embedded warning information

Embedded warnings refer to a particular part within a section. These warnings apply to smaller units of information than the warnings relating to sections. Embedded warnings use the following format:

⚠ DANGER! Instruction for avoiding a dangerous situation.

1.4.1.3 Signal words and pictograms

The following signal words are used:

Signal word	Definition
DANGER	Indicates a hazardous situation which, if not avoided, will result in death or serious injury.
WARNING	Indicates a hazardous situation which, if not avoided, could result in death or serious injury.
CAUTION	Indicates a hazardous situation which, if not avoided, could result in minor or moderate injury.
NOTICE	Indicates measures to be taken to prevent damage to property.

Table 1: Signal words in warning notices

Pictograms warn of dangers:

Pictogram	Definition
	Warning of a danger point
	Warning of dangerous electrical voltage

Pictogram	Definition
	Warning of combustible substances
	Warning of danger of tipping
	Warning of danger of crushing

Table 2: Pictograms used in warning notices

1.4.2 Information system

Information is designed to simplify and improve understanding of particular procedures. In this technical file it is laid out as follows:

Important information.

1.4.3 Instruction system

This technical file contains single-step and multi-step instructions.

Single-step instructions

Instructions which consist of only a single process step are structured as follows:

Aim of action

✓ Requirements (optional).

► Step 1 of 1.

⇨ Result of step (optional).

⇨ Result of action (optional).

Multi-step instructions

Instructions which consist of several process steps are structured as follows:

Aim of action

✓ Requirements (optional).

1. Step 1.
   ⇨ Result of step (optional).
2. Step 2.
   ⇨ Result of step (optional).

⇨ Result of action (optional).

2 Safety

- Read this technical file through to familiarize yourself with the product.
- This technical file is a part of the product.
- Read and observe the safety instructions provided in this chapter.
- Read and observe the warnings in this technical file in order to avoid function-related dangers.
- The product is manufactured on the basis of state-of-the-art technology. Nevertheless, risks to life and limb for the user or impairment of the product and other material assets due to the function may arise in the event of improper use.

2.1 Appropriate use

The product is an on-load tap-changer and adjusts the transmission ratio of transformers without interrupting the load flow. The product is designed solely for use in electrical energy systems and facilities. If used as intended and in compliance with the requirements and conditions specified in this technical file as well as the warning notices in this technical file and attached to the product, then the product does not present any danger to people, property or the environment. This applies throughout the service life of the product, from delivery, installation and operation to removal and disposal.

The following is considered appropriate use:

- Use the product only with the transformer specified in the order.
- Only operate the product with the versions of the motor-drive unit, drive shaft and protective relay that have been approved for use in explosive areas.
- The serial numbers of on-load tap-changer and on-load tap-changer accessories (drive, drive shaft, bevel gear, protective relay, etc.) must match if the on-load tap-changer and on-load tap-changer accessories are supplied as a set for one order.
- You will find the standard valid for the product and the year of issue on the nameplate.
- Operate the product in accordance with this technical file, the agreed-upon delivery conditions and the technical data.
- Ensure that all necessary work is performed by qualified personnel only.
- Only use the equipment and special tools included in the scope of delivery for the intended purpose and in accordance with the specifications of this technical file.
- The on-load tap-changer is not intended to be used with an oil filter unit.
- The measures described in this technical file must be taken in order to comply with explosion protection requirements.

Permitted electrical operating conditions

In addition to the design data in accordance with the order confirmation, observe the following limits for the through-current and the step voltage:

In the standard version, the on-load tap-changer is designed for sinusoidal 50/60 Hz alternating current with a curve form symmetrical to the zero axis and can switch 1.5 times the rated through-current I_r at its rated step voltage U_{ir}.

Exceeding the rated step voltage U_{ir} for a short period by up to 10% is permitted if the rated through-current I_r is not exceeded.

The highest voltage for equipment U_m is limited to 245 kV.

2.2 Inappropriate use

Use is considered inappropriate if the product is used in a way other than as described in the "Appropriate use" section. In addition, observe the following:

Prohibited electrical operating conditions

All operating conditions that do not comply with the design data in accordance with the order confirmation are prohibited.

Prohibited operating conditions may arise due to short circuits as well as due to inrush current impulses when energizing transformers or other electrical machines. This applies to the affected transformer itself just as it does to transformers electrically connected in parallel or serially or other electrical machines.

Higher voltages may occur due to transformer overexcitation following load shedding, for example.

Operations outside of the permitted operating conditions can lead to injury to persons and damage to the product.

- Prevent any such operations outside of the permitted operating conditions by taking suitable measures.

2.3 Fundamental safety instructions

To prevent accidents, malfunctions and damage as well as unacceptable adverse effects on the environment, those responsible for transport, installation, operation, maintenance and disposal of the product or parts of the product must ensure the following:

Personal protective equipment

Loosely worn or unsuitable clothing increases the danger of becoming trapped or caught up in rotating parts and the danger of getting caught on protruding parts. This poses a danger to life and limb.

- Wear appropriate personal protective equipment such as a helmet, work gloves, etc. for the respective activity.
- Never wear damaged personal protective equipment.
- Never wear rings, necklaces, or other jewelry.
- If you have long hair, wear a hairnet.

Work area

Untidy and poorly lit work areas can lead to accidents.

- Keep the work area clean and tidy.
- Make sure that the work area is well lit.
- Observe the applicable laws for accident prevention in the relevant country.

Working during operation

The product may only be operated in a sound, operational condition. Otherwise it poses a danger to life and limb.

- Regularly check the operational reliability of safety equipment.
- Comply with the inspection work, maintenance work and maintenance intervals described in this technical file.

Explosion protection

Highly flammable or explosive gases, vapors and dusts can cause serious explosions and fire.

- Do not install the product in potentially explosive areas or in potentially explosive atmospheres.

Safety markings

Warning signs and safety information plates are safety markings on the product. They are an important aspect of the safety concept.

- Observe all safety markings on the product.
- Make sure all safety markings on the product remain intact and legible.
- Replace safety markings that are damaged or missing.

Ambient conditions

To ensure reliable and safe operation, the product must only be operated under the ambient conditions specified in the technical data.

- Observe the specified operating conditions and requirements for the installation location.

Auxiliary materials and operating materials

Auxiliary materials and operating materials not approved by the manufacturer can lead to personal injury, damage to property and malfunctions of the product.

- For the on-load tap-changer oil compartment, use insulating fluids that meet the requirements in accordance with IEC 60296.
- If approved by the transformer manufacturer, you can use synthetic esters in accordance with IEC 61099.

- It is imperative that you consult with Maschinenfabrik Reinhausen GmbH because specific operating conditions apply to alternative insulating fluids.
- Only use conductive and grounded hoses, pipes, and pump equipment that are approved for flammable liquids.
- Only use lubricants and auxiliary materials approved by the manufacturer.
- Contact the manufacturer.

Modifications and conversions

Unauthorized or inappropriate changes to the product may lead to personal injury, material damage and operational faults.

- Only modify the product after consultation with Maschinenfabrik Reinhausen GmbH.

Spare parts

Spare parts not approved by Maschinenfabrik Reinhausen GmbH may lead to physical injury, damage to the product and malfunctions.

- Only use spare parts that have been approved by Maschinenfabrik Reinhausen GmbH.
- Contact Maschinenfabrik Reinhausen GmbH.

2.4 Standards and regulations

2.4.1 Application range of the on-load tap-changer

The on-load tap-changer is certified for II 3G Ex ec oc IIC T3 Gc. Refer to the following overview for the resulting application range.

1	2	3	4	5	6	7	8
Ex	II	3G	Ex	ec oc	IIC	T3	Gc

Table 3: Example of the application range

Number	Meaning
1	Sign for explosion protection
2	Equipment group
3	Equipment category
4	Ex: Symbol for explosion-protected equipment
5	Ignition protection type
6	Explosion group
7	Temperature class
8	EPL (equipment protection level)

Equipment groups (number 2)

I	Equipment in this category is intended for use in underground parts of mines as well as those parts of surface installations of such mines endangered by firedamp and/or combustible dust.
II	Equipment in this category is intended for use in other areas in which explosive atmospheres may be present.

Table 4: Equipment groups

Equipment category / zone classification (number 3)

Designation for gases	Designation for dusts	Definition
1G (0)	1D (20)	Equipment in this category is intended for use in areas in which explosive atmospheres caused by mixtures of air and gases, vapors or mists or by air/dust mixtures are present continuously, for long periods or frequently.
2G (1)	2D (21)	Equipment in this category is intended for use in areas in which explosive atmospheres caused by gases, vapors, mists or air/dust mixtures occur occasionally.
3G (2)	3D (22)	Equipment in this category is intended for use in areas in which explosive atmospheres caused by gases, vapors, mists, or air/dust mixtures are unlikely to occur or, if they do occur, are likely to do so only infrequently and for a short period only.

Table 5: Equipment category / zone classification

Ignition protection types (number 5)

d	Pressure-proof enclosure
e	Increased safety
i	Intrinsic safety (ia, ib)
m	Encapsulation
o	Liquid immersion Protection level "ob": Equipment protection level (EPL) "Gb" for zone 1 and zone 2 Protection level "oc": Equipment protection level (EPL) "Gc" for zone 2
p	Pressurized apparatus
q	Powder filling
n	Ignition protection type "n"

Table 6: Ignition protection types

Explosion group (number 6)

EN/IEC	Gases, vapors (examples)	Min. ignition energy (mJ)
IIA	Ammonia	-
IIA	Acetic acid, acetone, benzene, diesel, ethane, ether, fuel oil, hexane, methane, petrol, petroleum, propane	0.18
IIB	Ethylene, isoprene, town gas	0.06
IIC	Acetylene, carbon disulfide, hydrogen	0.02

Table 7: Explosion groups

Temperature classes (number 7)

Temperature class	Maximum equipment surface temperature	Ignition temperature of the flammable substances
T1	450°C	> 450°C
T2	300°C	> 300°C < 450°C
T3	200°C	> 200°C < 300°C
T4	135°C	> 135°C < 200°C
T5	100°C	> 100°C < 135°C
T6	85°C	> 85°C < 100°C

Table 8: Temperature classes

Equipment protection level (EPL) (number 8)

The EPL indicates the level of protection defined for a device based on the level of probability of ignition and taking into account the differences between potentially explosive gas atmospheres, potentially explosive dust atmospheres, and potentially explosive atmospheres in mine workings affected by firedamp.

2.4.2 Standards and regulations

The following standards and regulations apply to explosion-proof on-load tap-changers:

- EN/IEC 60079-0: Equipment – General requirements
- EN/IEC 60079-6: Equipment protection by liquid immersion "o"
- EN/IEC 60079-7: Equipment protection by increased safety "e"

2.5 Measures for ensuring compliance with explosion protection requirements

2.5.1 Measures taken by the manufacturer

Maschinenfabrik Reinhausen has taken the following measures for ensuring compliance with explosion protection requirements. You do not need to take any special measures in this regard.

2.5.1.1 Quality of the insulating oil in the on-load tap-changer

The quality of the insulating oil required by IEC 60296 and the quality of the synthetic esters required by IEC 61099 in the oil compartment of the on-load tap-changer is ensured by using vacuum cells with transition resistors.

2.5.1.2 Monitoring the oil temperature in the diverter switch oil compartment

A temperature sensor is provided in the on-load tap-changer head cover for monitoring the oil temperature in the diverter switch oil compartment. The corresponding temperature monitoring relay is in the TAPMOTION® ED-Ex.

Temperature monitoring prevents further switching of the on-load tap-changer when the maximum permitted temperature is reached. This maximum permitted temperature is factory-configured for each specific order for all on-load tap-changer types (maximum 130 °C) and secured against accidental incorrect adjustment.

2.5.2 Measures to be taken by the transformer manufacturer/operator

The following measures for ensuring compliance with explosion protection requirements must be taken by the transformer manufacturer/operator.

2.5.2.1 Prescribed protective and drive components

Operate the on-load tap-changer only in conjunction with the following components:

- Ex protective relay
- Ex motor-drive unit
- Ex drive shaft

2.5.2.2 Setting up the on-load tap-changer oil system

Operate the on-load tap-changer only with a suitable oil system. This diverter switch oil system consists of the diverter switch oil compartment, protective relay, and oil conservator of the on-load tap-changer. It ensures that enough insulating oil is present in the diverter switch oil compartment at all times.

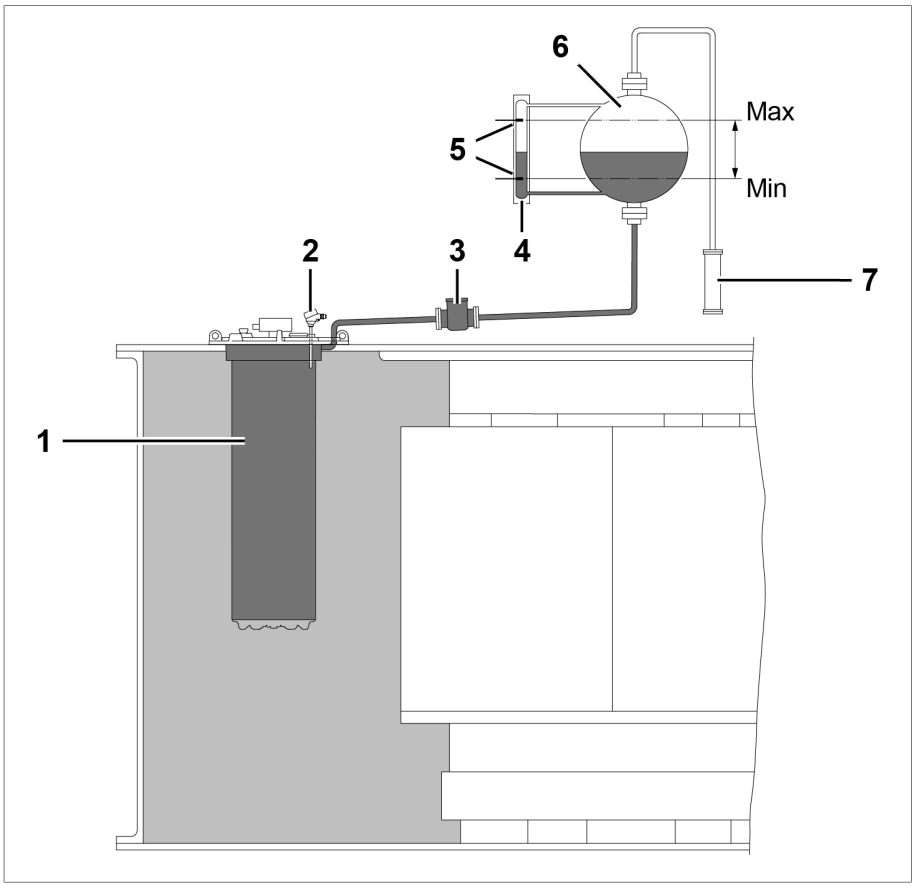

Figure 1: On-load tap-changer oil system

1	Diverter switch oil compartment	5	Signaling contacts
2	Temperature sensor	6	Oil conservator
3	Protective relay	7	Dehydrating breather
4	Level indicator		

2.5.2.3 Oil conservator to be used

The oil conservator of the on-load tap-changer ensures that sufficient insulating oil is present in the on-load tap-changer oil system at all times during operation.

Therefore, operate the on-load tap-changer only with a oil conservator that fulfills the following requirements:

2.5.2.3.1 Dehydrating breather

The oil conservator must be equipped with a dehydrating breather in accordance with VDE 0532-216-5 with downward-leading outlet and a protection degree of at least IP66 in accordance with IEC 60529.

2.5.2.3.2 Level indicator

The oil conservator must have a level indicator from which the minimum oil quantity required and the maximum quantity permitted, as well as the current oil level, can be read.

2.5.2.3.3 Level monitoring

The oil level in the oil conservator must be monitored at all times during operation. Therefore, loop the signaling contact for falling below the minimum oil level in the on-load tap-changer's oil conservator to the tripping circuit of the circuit breaker so that the circuit breaker will immediately de-energize the transformer when the oil level in the oil conservator falls below this minimum.

2.5.2.3.4 Insulating oil to be used

When filling the diverter switch oil compartment and its oil conservator, use only new mineral insulating oil for transformers in accordance with IEC 60296 (Specification for unused mineral insulating oils for transformers and switchgear) or synthetic ester in accordance with IEC 61099 (Specifications for unused synthetic organic esters for electrical purposes).

2.5.2.3.5 Checking the quality of the insulating oil in the Ex transformer

During the tap changes, polarity sparks (low energy) may occur at the tap selector of the on-load tap-changer in the transformer tank. In this regard, observe Section 5.1.6 and 5.1.7 in the on-load tap-changer standard IEC 60214.

Therefore, check the quality and dielectric strength of the insulating oil in the transformer tank on a regular basis and comply with the service intervals for the oil change.

2.5.2.4 Corrosion protection measures

Because further installation steps are required before operation of the on-load tap-changer, sufficient corrosion protection cannot be provided at certain interfaces to the transformer when the device leaves the factory.

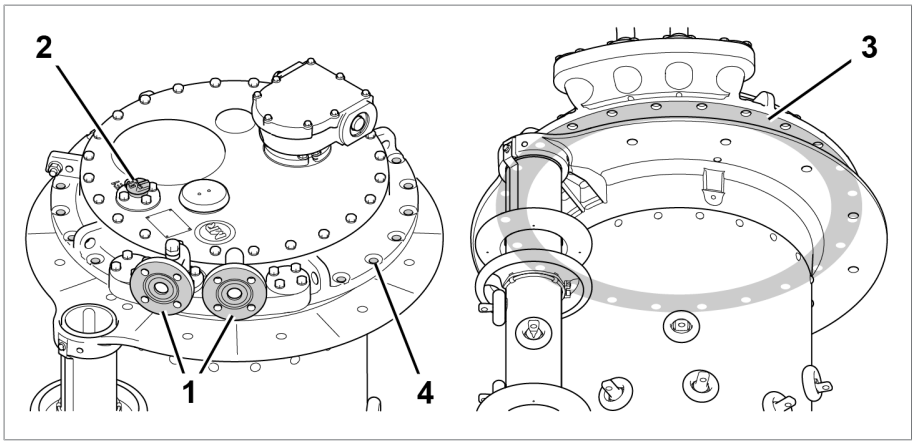

Figure 2: On-load tap-changer head

1	Sealing surface on piping connection flange	3	Contact surface on on-load tap-changer head
2	Air-vent valve	4	Through-holes

The sealing surfaces on the piping connection flange are zinc-plated ex factory. The through-holes are zinc-plated and partially painted.

The contact surface of the on-load tap-changer head is primed ex factory. The through-holes are primed and partially painted.

The transformer manufacturer is responsible for the design of the mating surfaces on the transformer and piping and that of the screw connections needed for these attachments.

1. Provide suitable sealing to prevent electrolytes from entering sealing surfaces and holes.
2. Design screws, washers, nuts etc. in A4 in accordance with ISO 3506-1/ ISO 3506-2 standard.
3. If the painted surfaces are damaged, note repair instructions. These can be requested from Maschinenfabrik Reinhausen GmbH's Technical Service department.

2.6 Personnel qualification

The person responsible for assembly, commissioning, operation, maintenance and inspection must ensure that the personnel are sufficiently qualified.

Electrically skilled person

The electrically skilled person has a technical qualification and therefore has the required knowledge and experience, and is also conversant with the applicable standards and regulations. The electrically skilled person is also proficient in the following:

- Can identify potential dangers independently and is able to avoid them.
- Is able to perform work on electrical systems.
- Is specially trained for the working environment in which (s)he works.
- Must satisfy the requirements of the applicable statutory regulations for accident prevention.

Electrically trained persons

An electrically trained person receives instruction and guidance from an electrically skilled person in relation to the tasks undertaken and the potential dangers in the event of inappropriate handling as well as the protective devices and safety measures. The electrically trained person works exclusively under the guidance and supervision of an electrically skilled person.

Operator

The operator uses and operates the product in line with this technical file. The operating company provides the operator with instruction and training on the specific tasks and the associated potential dangers arising from improper handling.

Technical Service

We strongly recommend having maintenance, repairs and retrofitting carried out by our Technical Service department. This ensures that all work is performed correctly. If maintenance is not carried out by our Technical Service department, please ensure that the personnel who carry out the maintenance are trained and authorized by Maschinenfabrik Reinhausen GmbH to carry out the work.

Authorized personnel

Authorized personnel are trained by Maschinenfabrik Reinhausen GmbH to carry out special maintenance.

2.7 Personal protective equipment

Personal protective equipment must be worn during work to minimize risks to health.

- Always wear the personal protective equipment required for the job at hand.
- Never wear damaged personal protective equipment.
- Observe information about personal protective equipment provided in the work area.

Protective clothing	Close-fitting work clothing with a low tearing strength, with tight sleeves and with no protruding parts. It mainly serves to protect the wearer against being caught by moving machine parts.
Safety shoes	To protect against falling heavy objects and slipping on slippery surfaces.
Safety glasses	To protect the eyes from flying parts and splashing liquids.
Visor	To protect the face from flying parts and splashing liquids or other dangerous substances.
Hard hat	To protect against falling and flying parts and materials.
Hearing protection	To protect against hearing damage.
Protective gloves	To protect against mechanical, thermal, and electrical hazards.

Table 9: Personal protective equipment

3 Product description

3.1 Scope of delivery

The product is packaged with protection against moisture and is usually delivered as follows:

- Ex on-load tap-changer with and without change-over selector
- Ex motor-drive unit
- Ex drive shaft with coupling parts and bevel gear
- Ex protective relay
- Technical files

Please refer to the delivery slip for full details of scope of delivery.

On-load tap-changers can also be provided as an on-load tap-changer set with a common motor-drive unit.

Note the following information:

- Check the shipment for completeness on the basis of the shipping documents.
- Store the parts in a dry place until installation
- The product must remain in its airtight, protective wrapping and may only be removed immediately before installation

You will find more information in the "Packaging, transport, and storage" [▶Section 4, Page 35] chapter.

3.2 On-load tap-changer

3.2.1 Function description

On-load tap-changers are used to adjust the transmission ratio of transformers without interrupting the load flow. This makes it possible to compensate for aspects such as fluctuations in voltage occurring in the power transmission grid. For this purpose, on-load tap-changers are fitted in transformers and connected to the active part of the transformer.

A motor-drive unit which receives a control impulse (e.g. from a voltage regulator) changes the operating position of the on-load tap-changer, and the transformer's transmission ratio is adapted to the prevailing operating requirements as a result.

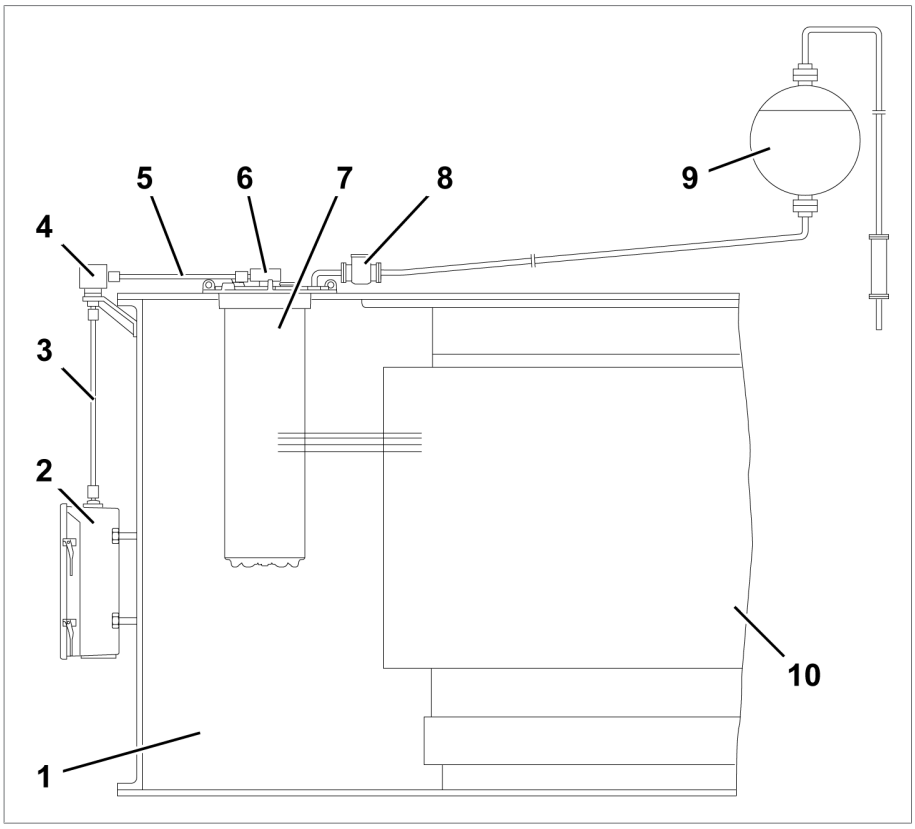

Figure 3: System overview of on-load tap-changer, transformer

1	Transformer tank	6	Gear unit
2	Motor-drive unit	7	On-load tap-changer
3	Vertical drive shaft	8	Protective relay
4	Bevel gear	9	Oil conservator
5	Horizontal drive shaft	10	Active part

3.2.2 Setup/models

The following drawing shows the main components of the on-load tap-changer.

You will find a detailed drawing of the on-load tap-changer in the "Drawings [▶Section 9, Page 135]" section.

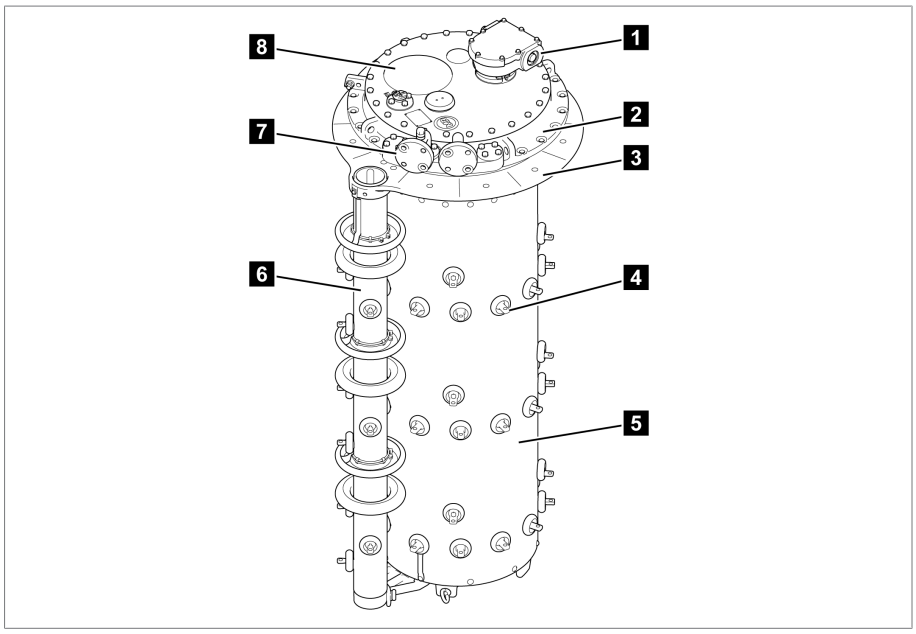

Figure 4: On-load tap-changer

1	Upper gear unit	2	On-load tap-changer head
3	Supporting flange	4	Connection contact
5	Oil compartment	6	Change-over selector
7	Pipe bend	8	Rupture disk

3.2.2.1 Pipe connections

The on-load tap-changer head features 4 pipe connections for different purposes.

Depending on the order, some or all of these pipe connections are fitted with pipe bends ex factory. All pipe bends can be freely swiveled once the pressure ring is loosened.

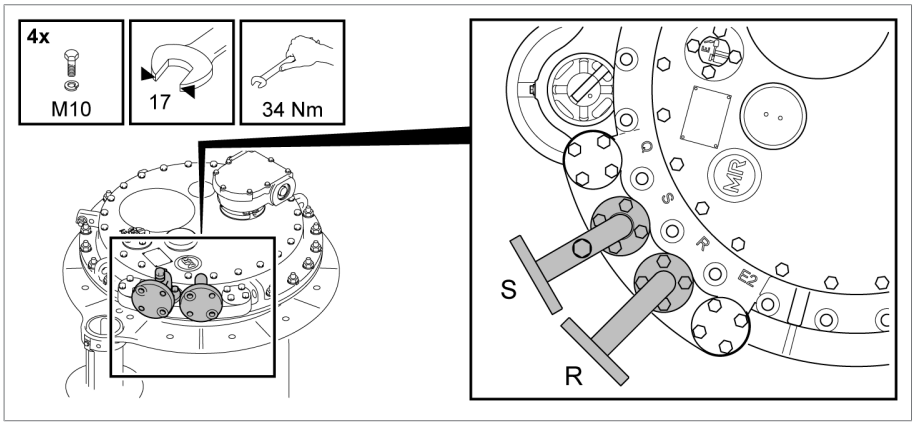

Figure 5: Pipe connections with pipe bends

Pipe connection Q

The pipe connection Q is closed with a blank cover.

The functions of the R and Q pipe connections can be interchanged.

Pipe connection S

The pipe bend on pipe connection S features a vent screw and can be connected to a pipe that ends with a drain valve on the side of the transformer tank at operating height. If the on-load tap-changer is fitted with an oil suction pipe, the on-load tap-changer can be completely emptied via pipe connection S.

Pipe connection R

Pipe connection R is intended for attachment of the protective relay and connection of the on-load tap-changer oil conservator and can be interchanged with pipe connection Q.

Pipe connection E2

Pipe connection E2 is sealed off with a blank cover. It leads into the oil tank of the transformer, directly under the on-load tap-changer head and can be connected to a collective pipe for the Buchholz relay, if necessary. This pipe connection serves a further purpose, namely to equalize the pressure between the transformer tank and oil compartment of the on-load tap-changer, which is necessary for drying, filling with insulating fluid and transportation of the transformer.

3.2.3 Nameplate and serial number

The nameplate is on the on-load tap-changer head cover.

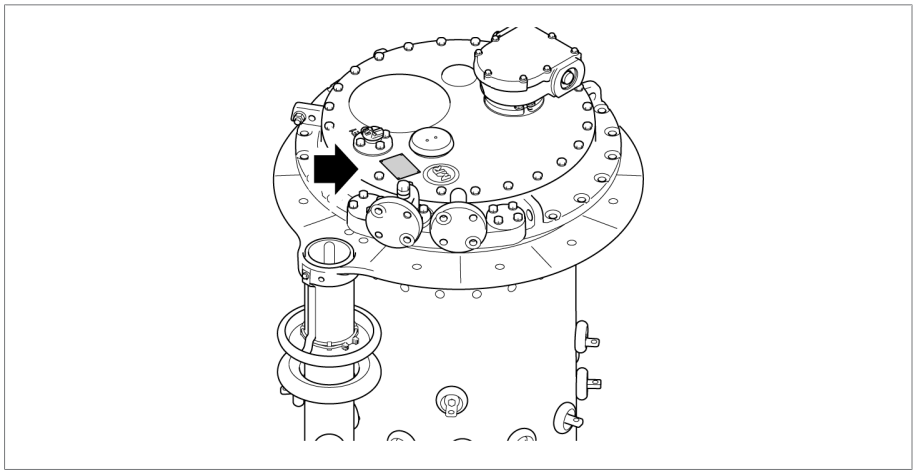

Figure 6: Nameplate with serial number

3.2.4 Protective devices

The on-load tap-changer is equipped with the following protective devices.

3.2.4.1 Protective relay

3.2.4.1.1 Function description

The protective relay is looped into the circuit breaker tripping circuit, thus protecting the on-load tap-changer and transformer in the event of a fault within the on-load tap-changer oil compartment. It is tripped when the specified speed of flow from the on-load tap-changer head to the oil conservator is exceeded due to a fault. The flowing insulating fluid actuates the flap valve which tips over into position OFF. The contact in the dry-reed magnetic switch is thereby actuated, the circuit breakers are tripped, and the transformer is de-energized.

The protective relay is a component of an on-load tap-changer filled with insulating fluid and its properties conform to the respective applicable version of IEC publication 60214-1.

Diverter switch operations at rated switching capacity or at permissible overload will not cause the protective relay to trip.

The protective relay responds to flow, not to gas accumulated in the protective relay. It is not necessary to bleed the protective relay when filling the transformer with insulating fluid. Gas accumulation in the protective relay is normal.

3.2.4.1.2 Setup/versions

Front view

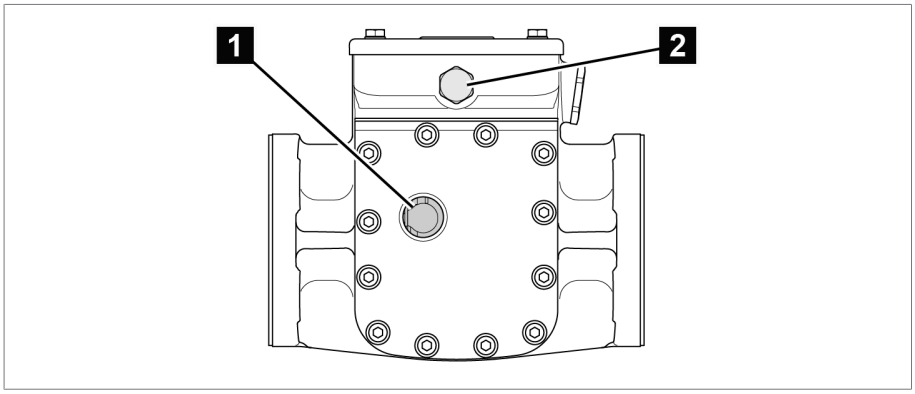

Figure 7: RS 2001-Ex

1	Inspection window	2	Pressure equalization element

Rear view

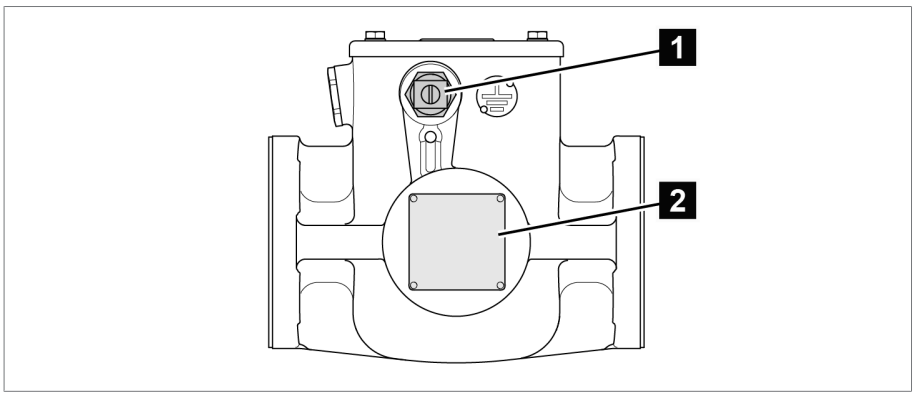

Figure 8: RS 2001-Ex

1	Ground connection	2	Nameplate

View from above

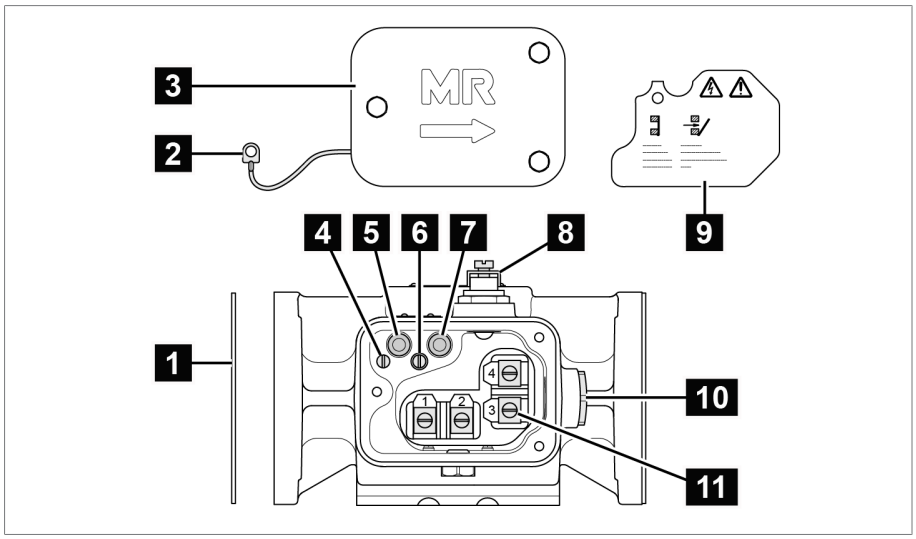

Figure 9: RS 2001-Ex

1	Gasket	2	Potential tie-in
3	Terminal box cover	4	Slotted head screw for potential tie-in
5	OPERATION (reset) test button	6	Slotted head screw for protective cover
7	OFF (test tripping) test button	8	Protective conductor connection
9	Protective cover	10	Dummy plug
11	Connection terminal		

3.2.4.1.3 Name plate

The name plate for the explosion-protected protective relay is on the rear of the product.

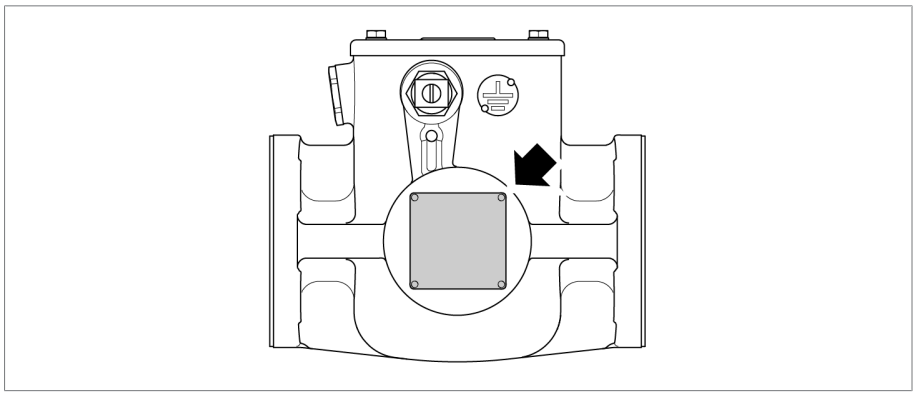

Figure 10: Position of name plate

3.2.4.2 Rupture disk

The rupture disk is a pressure relief device without signaling contact in accordance with IEC 60214-1 and is located in the on-load tap-changer head cover.

The rupture disk responds to a defined overpressure in the oil compartment of the on-load tap-changer.

3.2.4.3 Temperature monitoring

The temperature monitoring system monitors the temperature of the insulating fluid in the oil compartment of the on-load tap-changer.

3.3 Drive shaft

3.3.1 Function description

The drive shaft is the mechanical connection between the drive and the on-load tap-changer head.

The bevel gear changes the direction from vertical to horizontal.

Accordingly, the vertical drive shaft has to be mounted between the drive and bevel gear, and the horizontal drive shaft between the bevel gear and on-load tap-changer or de-energized tap-changer.

The explosion-proof drive shaft consists of a square tube with insulator and is coupled by two coupling brackets and one coupling bolt at both ends to the drive or driven shaft end of the device to be connected.

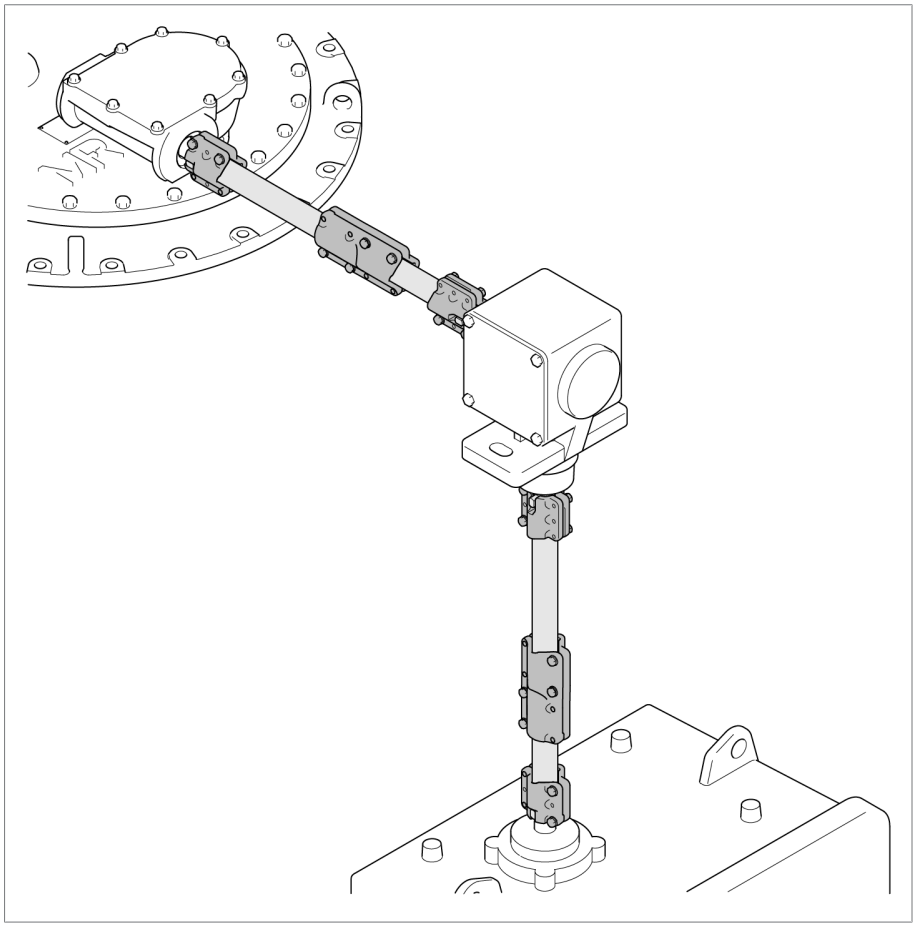

Figure 11: Explosion-proof drive shaft with insulator

3.3.2 Design/Model

The design of the explosion-proof drive shaft is described in this section.

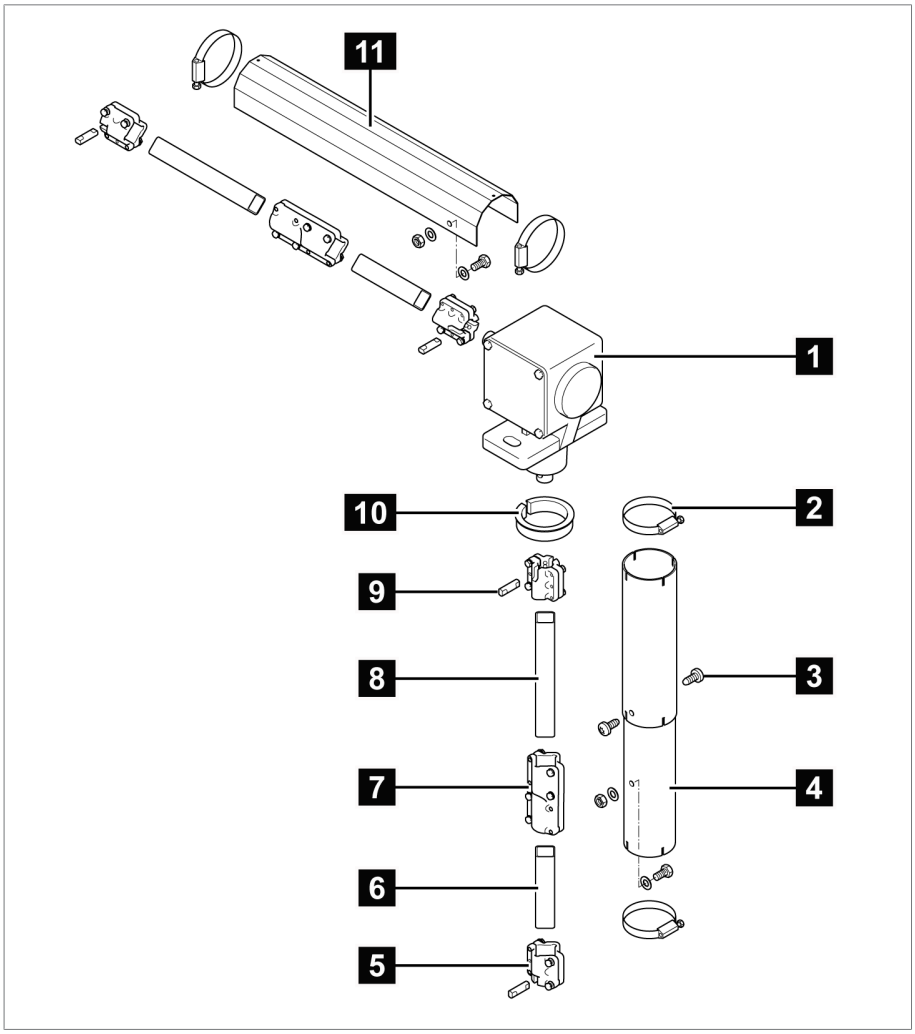

Figure 12: Components of the explosion-proof drive shaft

1	Bevel gear	2	Hose clip
3	Screws	4	Telescopic protective tube
5	Coupling bracket	6	Insulator
7	Double coupling bracket	8	Square tube
9	Pin	10	Adapter ring
11	Protective cover		

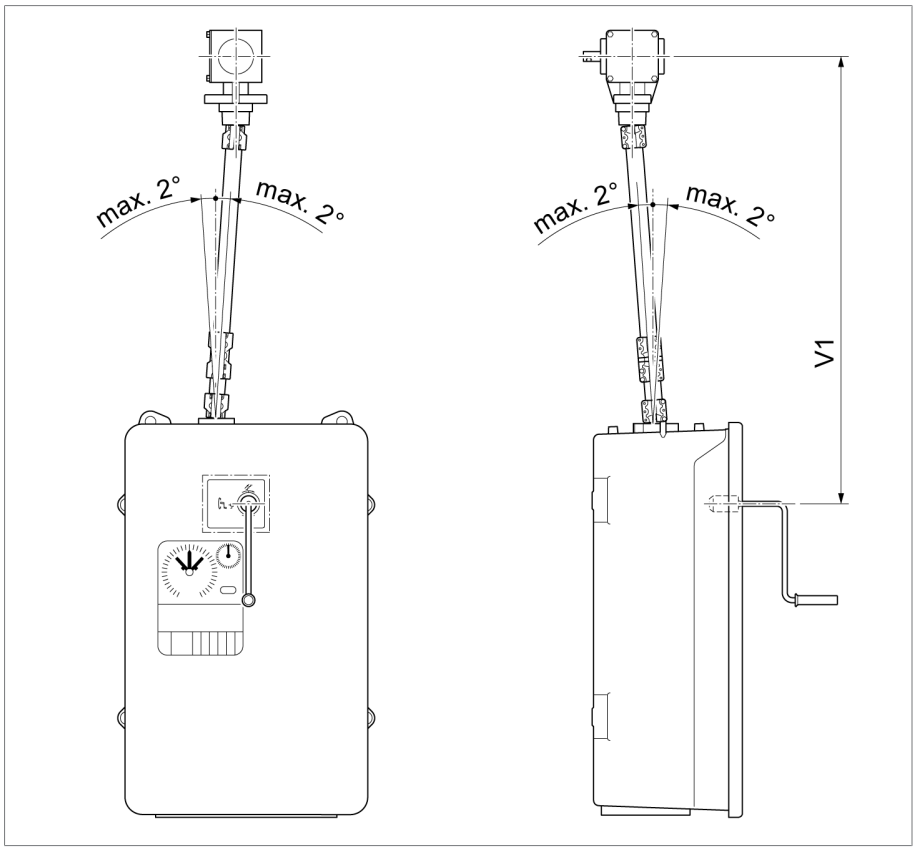

Configuration	V 1 min	Intermediate bearing
Middle of hand crank – middle of bevel gear (maximum permissible axial offset 2°)	706 mm	If the maximum value of 2472 mm is exceeded, the use of an intermediate bearing is necessary. V 1 ≤ 2472 mm (without intermediate bearing) V 1 > 2472 mm (with intermediate bearing)

3.3.3 Identification plate

The identification plate is on the telescopic protective tube.

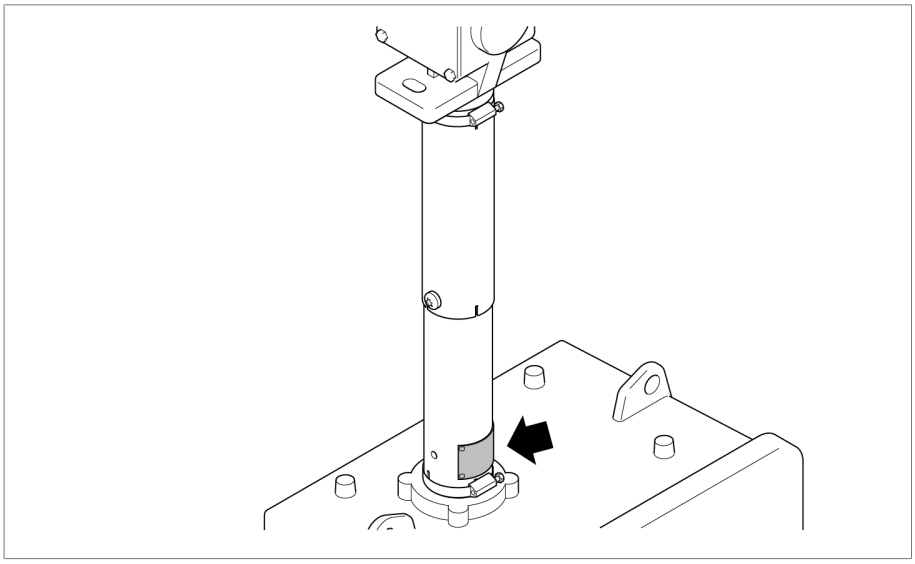

Figure 13: Position of the identification plate

4 Packaging, transport and storage

4.1 Packaging

The products are sometimes supplied with sealed packaging and sometimes in a dry state, depending on requirements.

Sealed packaging surrounds the packaged goods with plastic foil on all sides.

Products that have also been dried are identified by a yellow label on the sealed packaging. In the dry state, delivery is also possible in a transport container.

The information in the following sections should be applied as appropriate.

4.1.1 Suitability

NOTICE **Property damage due to incorrectly stacked crates!**

Stacking the crates incorrectly can lead to damage to the packaged goods.

- ► The outer marking on the packaging states if, for example, the on-load tap-changer or selector has been packed upright. Never stack these crates.
- ► General rule: Do not stack crates above a height of 1.5 m.
- ► For other crates: Only stack up to 2 equally sized crates on top of one another.

The packaging is suitable to ensure undamaged and fully functional means of transportation in compliance with local transportation laws and regulations.

The packaged goods are packed in a sturdy crate. This crate ensures that, when in the intended transportation position, the packaged goods are stabilized to prevent impermissible changes in position, and that none of the parts touch the loading surface of the means of transport or touch the ground after unloading.

Sealed packaging surrounds the packaged goods with plastic foil on all sides. The packaged goods are protected from humidity using a desiccant. The plastic foil was bonded after the desiccant is added.

4.1.2 Markings

The packaging bears a signature with instructions for safe transport and correct storage. The following symbols apply to the shipment of non-hazardous goods. Adherence to these symbols is mandatory.

	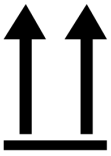			
Protect against moisture	Top	Fragile	Attach lifting gear here	Center of mass

Table 10: Shipping pictograms

4.2 Transportation, receipt and handling of shipments

⚠ WARNING

Danger of death or severe injury!

Danger of death or serious injuries due to tipping or falling load.

- ▶ Only transport the crate when closed.
- ▶ Do not remove the securing material used in the crate during transport.
- ▶ If the product is delivered on a pallet, secure it sufficiently.
- ▶ Only trained and authorized persons may select the sling gear and secure the load.
- ▶ Do not walk under the suspended load.
- ▶ Use means of transport and lifting gear with a sufficient carrying capacity in accordance with the weight stated on the delivery slip.

In addition to oscillation stress, jolts must also be expected during transportation. In order to prevent possible damage, avoid dropping, tipping, knocking over and colliding with the product.

If a crate tips over, falls from a certain height (e.g. when slings tear) or is subject to an unbroken fall, damage must be expected regardless of the weight.

Every delivered shipment must be checked for the following by the recipient before acceptance (acknowledgment of receipt):

- Completeness based on the delivery slip
- External damage of any type

The checks must take place after unloading when the crate or transport container can be accessed from all sides.

Visible damage If external transport damage is found upon receipt of the shipment, proceed as follows:

- Immediately record the identified transport damage in the shipping documents and have this countersigned by the carrier.
- In the event of severe damage, total loss or high damage costs, immediately notify the manufacturer and the relevant insurance company.
- After identifying damage, do not modify the condition of the shipment further and retain the packaging material until an inspection decision has been made by the transport company or the insurance company.
- Record the details of the damage immediately on site together with the carrier involved. This is essential for any claim for damages.
- Photograph damage to packaging and packaged goods. This also applies to signs of corrosion on the packaged goods due to moisture inside the packaging (rain, snow, condensation).
- ***NOTICE!*** Damage to packaged goods due to damaged sealed packaging. If the product is delivered in sealed packaging, check the sealed packaging immediately. If the sealed packaging is damaged, do not under any circumstances install or commission the packaged goods. Either re-dry the dried packaged goods as per the operating instructions, or contact the manufacturer to agree on how to proceed.
- Identify the damaged parts.

Hidden damage When damages are not determined until unpacking after receipt of the shipment (hidden damage), proceed as follows:

- Make the party responsible for the damage liable as soon as possible by telephone and in writing, and prepare a damage report.
- Observe the time periods applicable to such actions in the respective country. Inquire about these in good time.

With hidden damage, it is very hard to make the transportation company (or other responsible party) liable. Any insurance claims for such damages can only be successful if relevant provisions are expressly included in the insurance terms and conditions.

4.3 Storage of shipments

Packaged goods dried by Maschinenfabrik Reinhausen

Upon receipt of the shipment, immediately remove the packaged goods dried by Maschinenfabrik Reinhausen from the sealed packaging and store air-tight in dry insulating fluid until used if the packaged goods were not supplied in insulating fluid.

Non-dried packaged goods

Non-dried packaged goods but with a functional sealed packaging can be stored outdoors when the following conditions are complied with.

When selecting and setting up the storage location, ensure the following:

- Protect stored goods against moisture (flooding, water from melting snow and ice), dirt, pests such as rats, mice, termites and so on, and against unauthorized access.
- Store the crates on timber beams and planks as a protection against rising damp and for better ventilation.
- Ensure sufficient carrying capacity of the ground.
- Keep entrance paths free.
- Check stored goods at regular intervals. Also take appropriate action after storms, heavy rain or snow and so on.

Protect the packaging foil from direct sunlight so that it does not disintegrate under the influence of UV rays, which would cause the packaging to lose its sealing function.

If the product is installed more than 6 months after delivery, suitable measures must be taken without delay. The following measures can be used:

- Correctly regenerate the drying agent and restore the sealed packaging.
- Unpack the packed goods and store in a suitable storage space (well ventilated, as dust-free as possible, humidity < 50% where possible).

4.4 Unpacking shipments and checking for transportation damages

- ***NOTICE!*** Damage to packaged goods due to ineffectively sealed packaging. Transport the packaged crate to the place where the packaged goods are to be installed. Do not open the sealed packaging until just before installation.
- **⚠ WARNING!** Serious injuries and damage to the packaged goods due to the packaged goods tipping out. Place the packaged goods in an upright crate and protect it from tipping out.
- Unpack the packaged goods and check the condition.
- Check the completeness of the accessories kit using the delivery slip.

5 Mounting

This chapter describes how to correctly install and connect the device.

⚠ DANGER

Danger of explosion!

Death or serious injury may result from installing the on-load tap-changer in an environment at risk of explosion and from installation on an energized transformer!

► Only perform installation work in an environment not at risk of explosion.

► Ensure that the transformer is not energized when installing the on-load tap-changer.

⚠ WARNING

Risk of crushing!

When the on-load tap-changer undertakes a tap-change operation, components – some of which are freely accessible – move on the selector, change-over selector, and potential connection unit. Reaching into the selector, change-over selector, or potential connection unit during a tap-change operation may result in serious injuries.

► Keep at a safe distance of at least 1 m during tap-change operations.

► Do not reach into the selector, change-over selector, or potential connection unit during tap-change operations.

► Do not switch the on-load tap-changer during work on the selector, change-over selector, or potential connection unit.

5.1 Installation information

Note the following information for the installation:

1. Use the lifting straps provided to unpack and for transport by crane.
2. During installation take particular care to avoid damaging the painted coating.
3. Do not allow attachment elements to damage the painted surface of the on-load tap-changer.
4. Before applying a protective coating to cut edges and joins, clean these areas as described below.
5. ***NOTICE!*** Correctly prepare surfaces. Otherwise premature corrosion may occur, resulting in damage. Never use concentrated isopropanol, spirits (ethanol) or similar substances for cleaning.
6. Remove substances which reduce adhesion, e.g. dirt, dust, grease or loose objects by sanding with nylon or Perlon fleece and pre-clean the surface by blowing with dry air.
7. Then clean the surface with a 25% solution of ethanol in water.
8. Before coating, ensure that the treated surfaces are totally dry.

9. Apply suitable corrosion protection to cut edges of the drive shaft's protective cover.
10. Seal joins after installation, e.g. by painting over them.

You will find more information about surface treatment and detailed information about repairing damage to the protective layer in the repair instructions. These are available from Maschinenfabrik Reinhausen GmbH's Technical Service department on request.

5.2 Preparatory work

Perform the work stated below before installing the on-load tap-changer in the transformer.

5.2.1 Fitting mounting flange on transformer cover

A mounting flange is required for fitting the on-load tap-changer head on the transformer cover. This can be supplied as an option or can be produced by the customer. Mounting flanges made by the customer must comply with the installation drawings in the appendix.

► **NOTICE!** Fit mounting flange on transformer cover (pressure tight).Ensure that the sealing face makes complete contact and is not damaged.

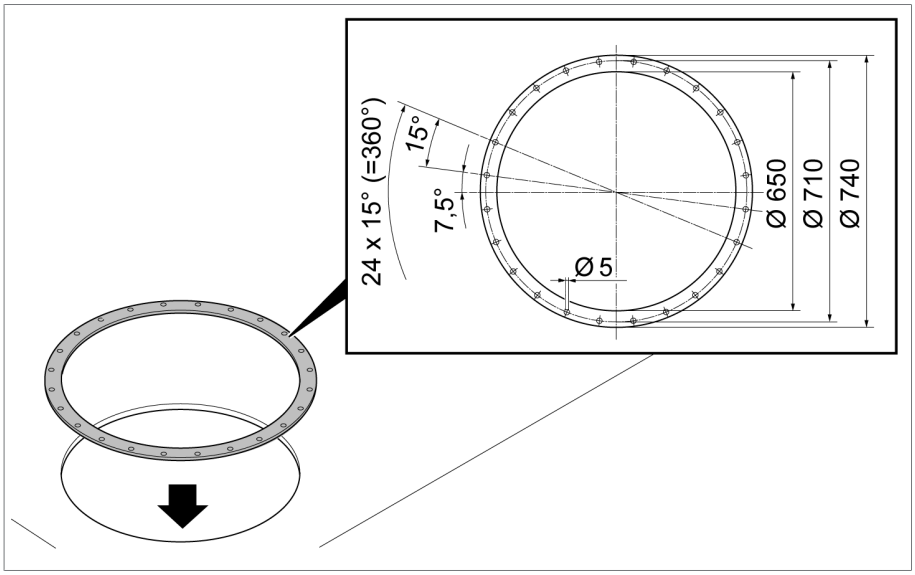

Figure 14: Mounting flange

5.2.2 Fitting stud bolts on mounting flange

To attach the stud bolts to the mounting flange, use a tracing template. This can be provided upon request free of charge for the initial installation of the on-load tap-changer.

1. Place tracing template on mounting flange and use the four markings to align.

2. Fit stud bolts on mounting flange.

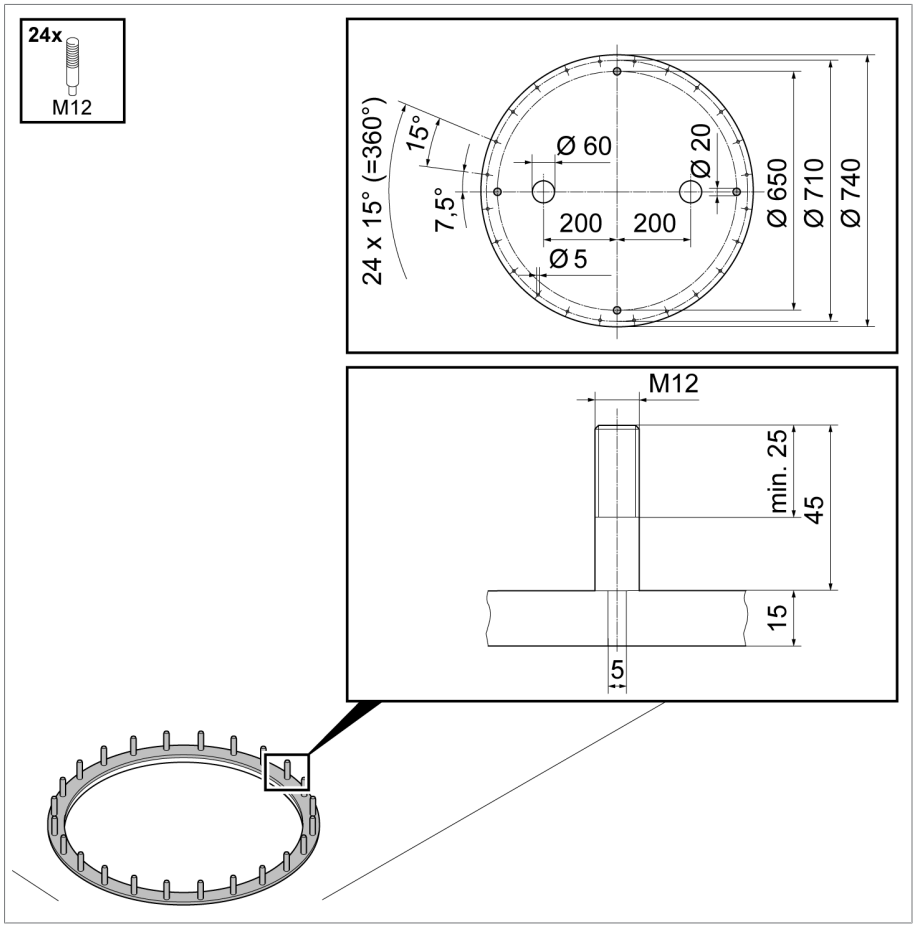

Figure 15: Tracing template, stud bolts

5.3 Installing the on-load tap-changer in the transformer (standard version)

5.3.1 Fastening on-load tap-changer to transformer cover

Note that only on-load tap-changers with an unscrewed supporting flange can be fitted in a transformer with the standard design.

5.3.1.1 Lifting top part of on-load tap-changer head off supporting flange (bottom part)

NOTICE

Damage to the on-load tap-changer!

Small parts in the oil compartment may block the diverter switch insert, thereby damaging the on-load tap-changer.

► Ensure that parts do not fall into the oil compartment.

► Check that all small parts are accounted for.

1. **⚠ CAUTION!** An unstably positioned on-load tap-changer may tip, resulting in serious injuries and damage. Place on-load tap-changer on a level surface and secure it against tipping.
2. Remove red-colored packaging material and transport material from on-load tap-changer.
3. Ensure that the on-load tap-changer is in the adjustment position. The adjustment position is indicated in the on-load tap-changer connection diagram included in delivery.
4. Ensure that the inspection window is sealed off with the cover.
5. Remove screws and locking washers on on-load tap-changer head cover.

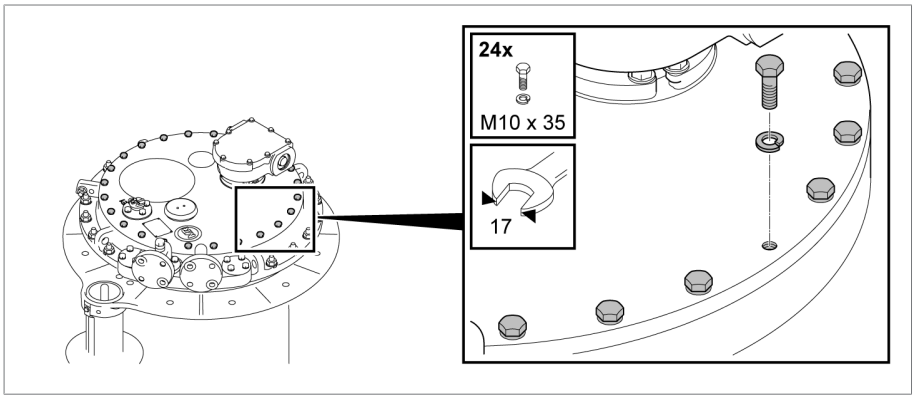

Figure 16: On-load tap-changer head cover

6. Remove on-load tap-changer head cover.

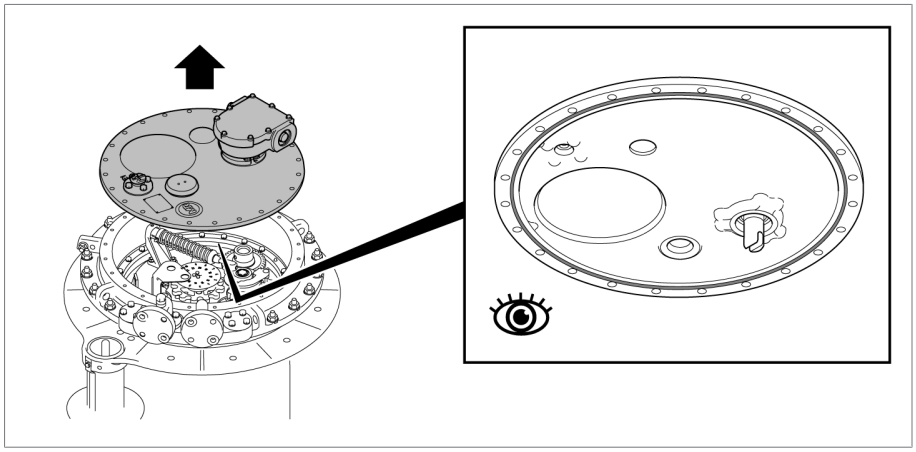

Figure 17: On-load tap-changer head cover

7. For design with oil suction pipe, loosen screw connection of R3/4" oil suction pipe. Check for leaks.

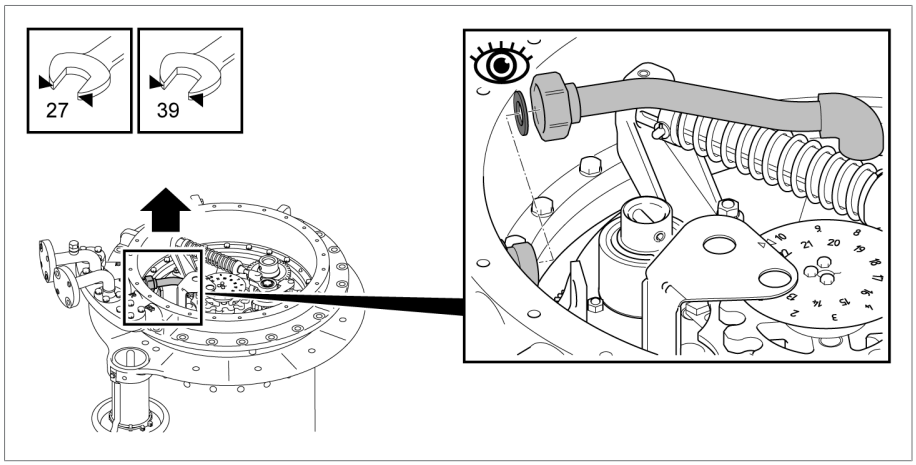

Figure 18: Oil suction pipe

8. Remove bolts and locking washers between top part of on-load tap-changer head and supporting flange.

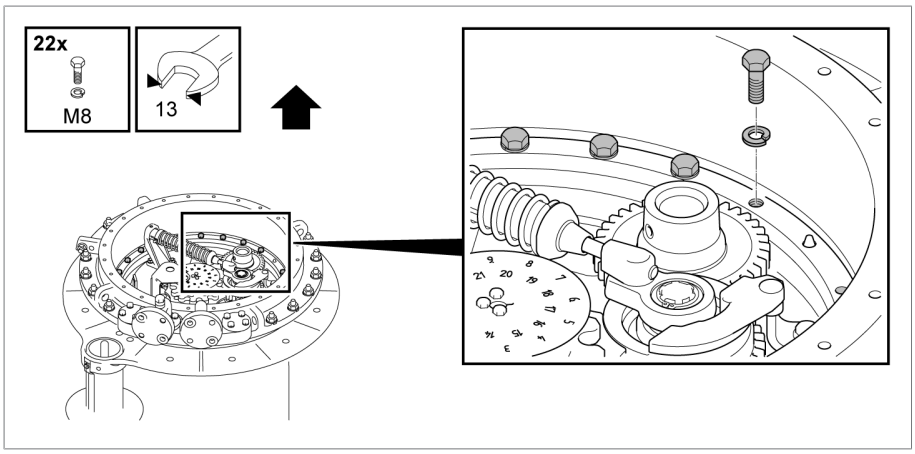

Figure 19: On-load tap-changer head

9. Lift top part of on-load tap-changer head off supporting flange.

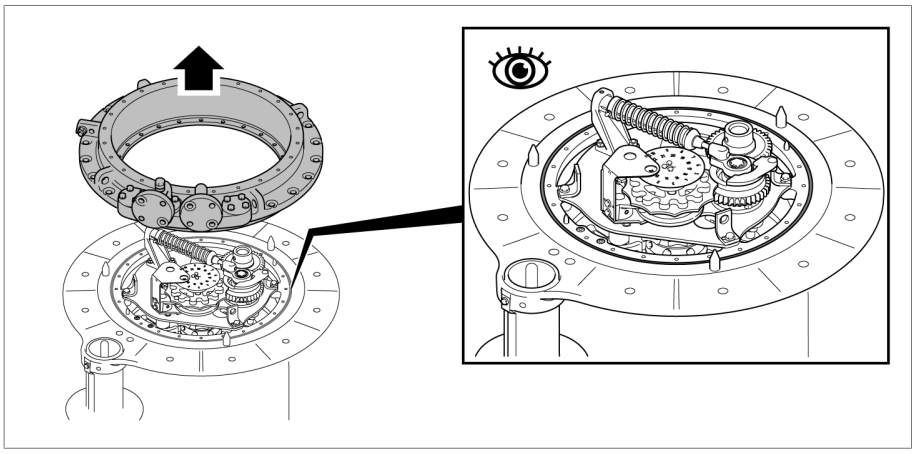

Figure 20: On-load tap-changer head

5.3.1.2 Positioning the top part of the on-load tap-changer head on the transformer cover

1. Clean sealing surfaces on mounting flange and on-load tap-changer head, place oil-resistant gasket on mounting flange.

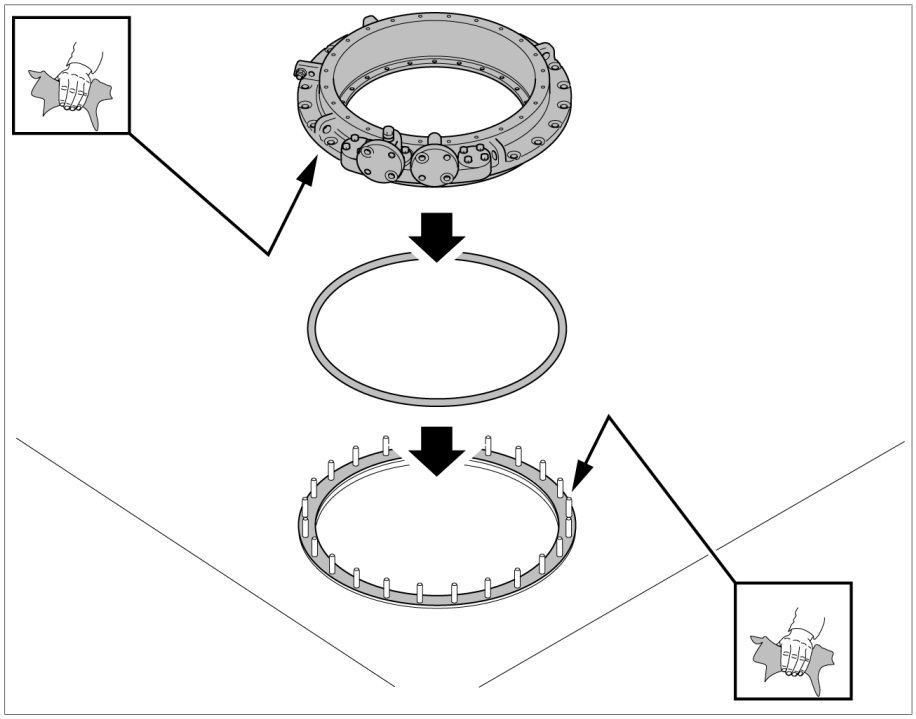

Figure 21: Mounting flange and on-load tap-changer head

2. Position top part of on-load tap-changer head on mounting flange.

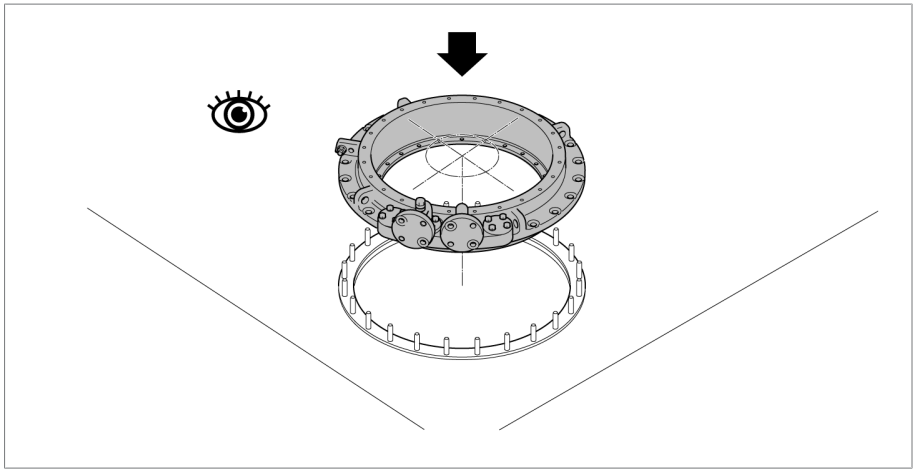

Figure 22: On-load tap-changer head

For design without oil suction pipe, the on-load tap-changer head can be turned towards the supporting flange in 15° steps. For design with oil suction pipe, turning at 15° increments is not possible.

When positioning the on-load tap-changer head, do however note that the tap-change supervisory control restricts the swivel range of the upper gear unit.

5.3.1.3 Connecting on-load tap-changer to top part of on-load tap-changer head

NOTICE

Damage to the on-load tap-changer!

A missing or damaged o-ring as well as unclean sealing surfaces lead to insulating fluid escaping and therefore to damage to the on-load tap-changer.

- ► Ensure that the o-ring is positioned untwisted in the on-load tap-changer head cover.
- ► Ensure that the o-ring does not become damaged when mounting the cover.
- ► Ensure that the sealing surfaces on the on-load tap-changer head cover and on-load tap-changer head are clean.

1. **NOTICE!** Incorrectly lifting the on-load tap-changer will damage it. Secure 4 ropes of equal length (at least 1 m in length) to the attachment points provided and slowly lift on-load tap-changer from below towards on-load tap-changer head. Under no circumstances should the on-load tap-changer be lifted up with the fixing bolts. Ensure that all supporting flange stud bolts go easily through the mounting holes of the on-load tap-changer head.

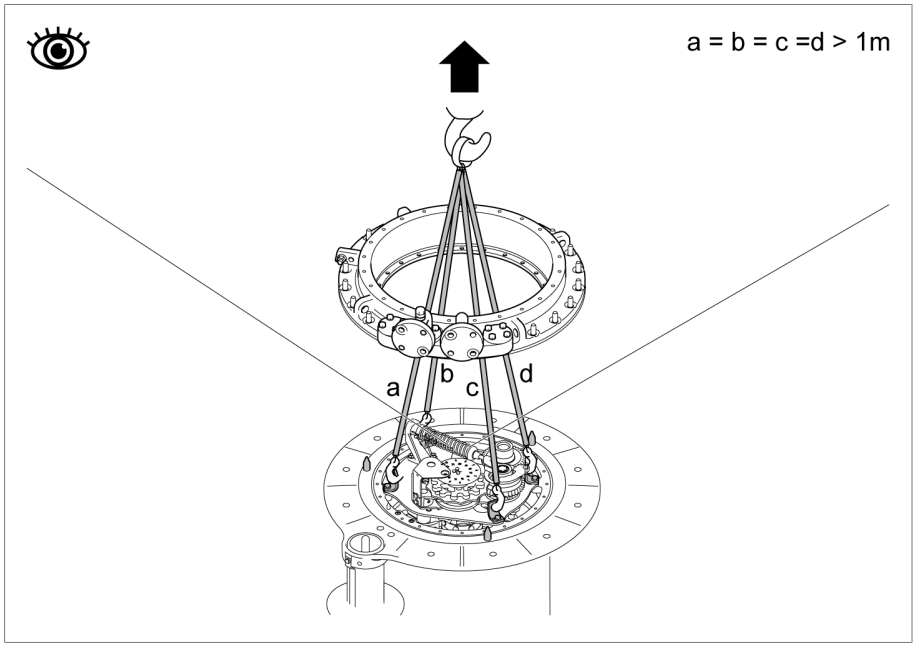

Figure 23: On-load tap-changer

2. Screw the top part to the bottom part of the on-load tap-changer head.

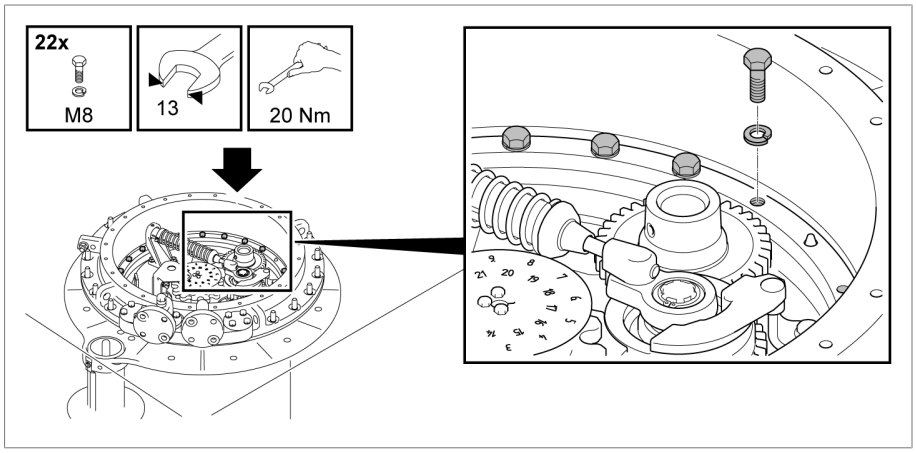

Figure 24: On-load tap-changer head

3. For design with oil suction pipe, connect oil suction pipe screw connection. Check for leaks.

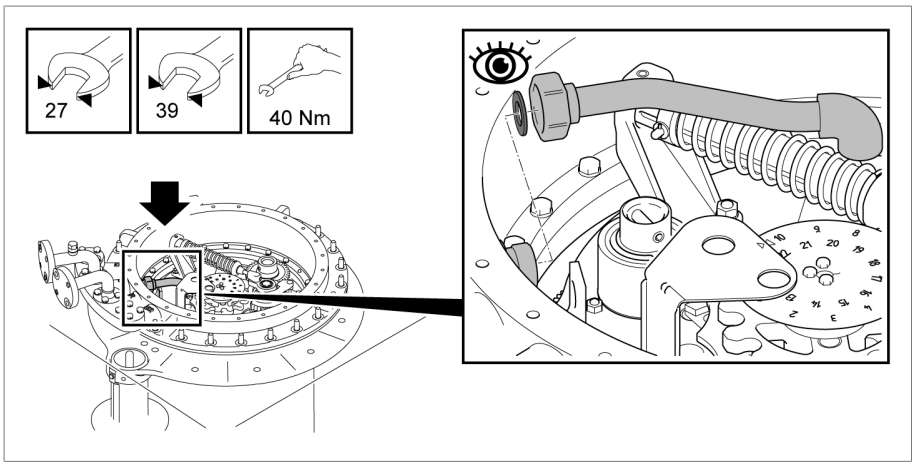

Figure 25: Oil suction pipe

4. Screw the on-load tap-changer head to the mounting flange. The tightening torque depends on the screw connection elements used.

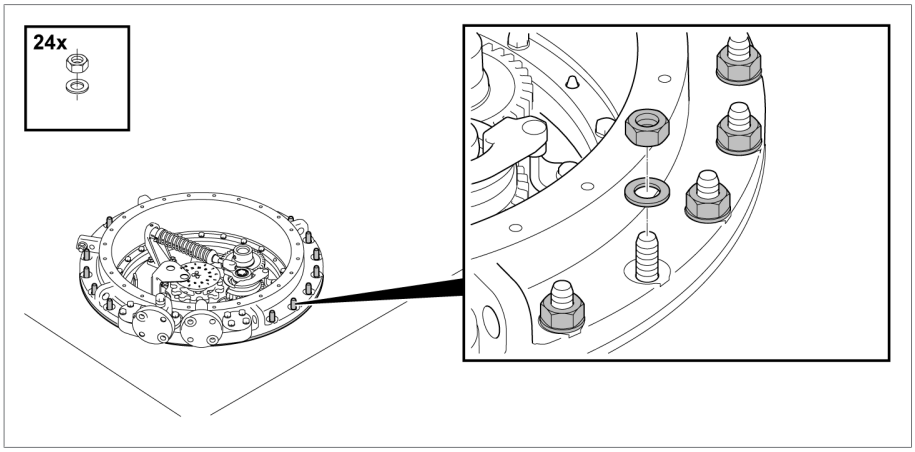

Figure 26: On-load tap-changer head

5. Place on-load tap-changer head cover on on-load tap-changer head and secure.

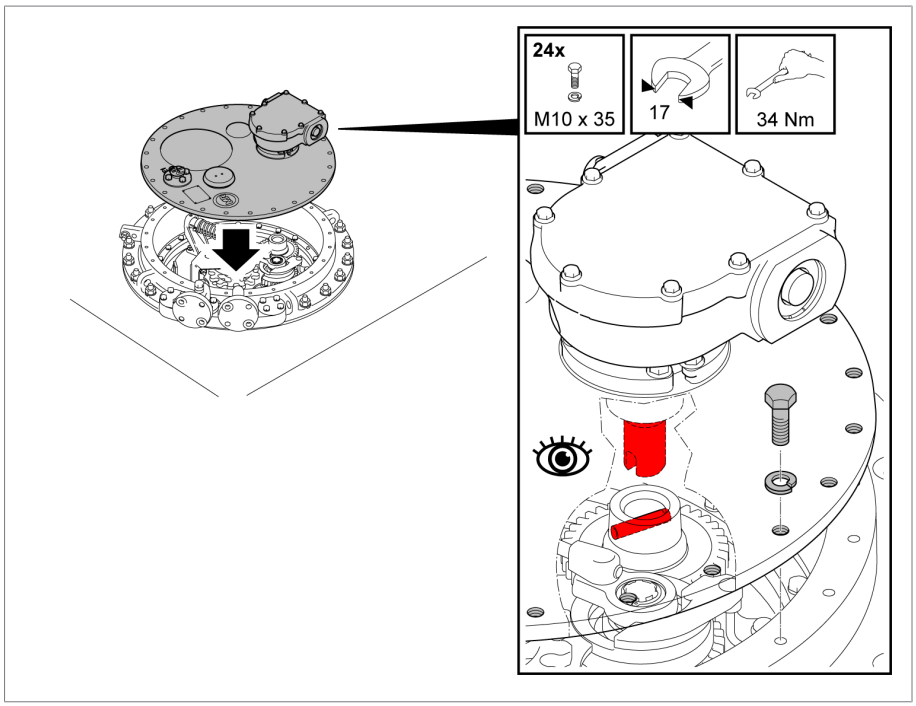

Figure 27: On-load tap-changer head cover

5.3.2 Connecting the tap winding and on-load tap-changer take-off lead

NOTICE

Damage to the on-load tap-changer!

Connecting leads which place mechanical strain on the on-load tap-changer will damage the on-load tap-changer!

- ► Establish and secure connections with care.
- ► Do not twist connection contacts.
- ► Connect connecting leads without warping or deforming.
- ► If necessary use an expansion loop for connecting leads.

1. Connect tap winding and on-load tap-changer take-off lead in accordance with the connection diagram included with the delivery.
2. If connection leads have to cross the open surface of the oil compartment/ change-over selector, there must be a clearance of 50 mm between the connecting leads and the surface of the oil compartment/change-over selector.

The designations of the on-load tap-changer's connection contacts are shown in the connection diagram. The connection contacts are provided with vertical through-holes (11 mm diameter for M10 screws, see appendix [► Section 9.4, Page 138]).

5.3.3 Performing transformer ratio test before drying

NOTICE

Damage to the on-load tap-changer!

Damage to the on-load tap-changer due to transformer ratio test being incorrectly performed.

- ► Do not perform more than 250 tap-change operations on the on-load tap-changer. If more than 250 tap-change operations are to be performed, completely fill the oil compartment with insulating fluid and lubricate sliding surfaces of contacts on the selector and selector gear with insulating fluid.
- ► Only switch the on-load tap-changer from one operating position to the next via the upper gear unit. You can use a short tube (diameter 25 mm) with screwed-in coupling bolt (diameter 12 mm) with a hand wheel or crank for this, for example. When using a drill, do not exceed a maximum speed of 250 rpm.
- ► Always check the operating position reached through the inspection window in the on-load tap-changer head cover. Never overshoot the end positions, which are indicated in the connection diagram supplied with the delivery.
- ► For multiple-column applications with a shared drive, link all on-load tap-changer heads to one another using the horizontal drive shaft parts.

When actuating the change-over selector, a higher torque is required.

1. Switch the on-load tap-changer into the desired operating position. The diverter switch operation can be heard distinctly.
2. **NOTICE!** An incomplete tap-change operation may damage the on-load tap-changer. After operating the diverter switch, continue to crank the drive shaft of the upper gear unit for 2.5 revolutions in the same direction in order to correctly complete the tap-change operation.
3. Perform the transformer ratio test.
4. Repeat the transformer ratio test in all operating positions.
5. Switch the on-load tap-changer into adjustment position (see the accompanying connection diagram for the on-load tap-changer).

After the transformer ratio test, open the kerosene drain plug in the oil compartment if the on-load tap-changer is to be dried with kerosene in the transformer tank. After drying, the diverter switch insert must be removed, the kerosene drain plug in the oil compartment closed and the diverter switch insert refitted.

5.3.4 Performing DC resistance measurement on transformer

The measured DC current is normally restricted to 10% of the rated current of the measured transformer winding in order to prevent the winding from overheating.

Perform the DC resistance measurement in various on-load tap-changer operating positions. You need to distinguish here whether the measured current is interrupted when changing operating position or not.

Status of oil compartment	Without interruption in measured current	With interruption (measured current = 0 A before change of operating position)
Oil compartment empty	Maximum 10 A DC	Maximum 50 A DC
Oil compartment filled with insulating fluid	Maximum 50 A DC	Maximum 50 A DC

Table 11: Maximum permitted measured currents when performing DC resistance measurement on transformer

5.3.5 Drying on-load tap-changer in autoclave

NOTICE

Damage to the on-load tap-changer!

Moisture in the oil compartment reduces the dielectric strength of the insulating fluid and thus leads to damage to the on-load tap-changer.

► Within 10 hours of drying, seal off oil compartment with on-load tap-changer head cover.

Dry on-load tap-changer in accordance with the following instructions to ensure the dielectric values assured by MR for the on-load tap-changer.

If drying in an autoclave, the following methods are possible:

- Vacuum drying
- Vapor-phase drying

As an alternative to drying the on-load tap-changer in an autoclave, it can also be dried in the transformer tank.

5.3.5.1 Vacuum-drying in the autoclave

Before starting vacuum-drying in the autoclave, you must remove the on-load tap-changer head cover and on-load tap-changer accessories:

1. **NOTICE!** Remove the on-load tap-changer head cover (24 screws M10/ wrench size 17 with safety elements) and store it outside the autoclave. If this is not done, the on-load tap-changer head cover may be damaged.
2. **NOTICE!** Remove on-load tap-changer accessories and store outside autoclave: motor-drive unit, drive shaft, protective relay, bevel gear, temperature sensor. If this is not done, the on-load tap-changer accessories may be damaged.

Vacuum-drying in the autoclave

1. Heat up the on-load tap-changer in air at atmospheric pressure with a temperature increase of approximately 10 °C/h to a final temperature of maximum 110 °C.
2. Pre-dry the on-load tap-changer in circulating air at a maximum temperature of 110 °C for a period of at least 20 hours.
3. Vacuum-dry on-load tap-changer at between 105 °C and maximum 125 °C for at least 50 hours.
4. Residual pressure of no more than 10^{-3} bar.

5.3.5.2 Vapor-phase drying in the autoclave

For vapor-phase drying in the autoclave, you must open the kerosene drain plug in the oil compartment base before drying so that the kerosene condensate can drain from the oil compartment.

1. Unscrew kerosene drain plug in base of oil compartment counter-clockwise. The kerosene drain plug cannot be unscrewed all the way.

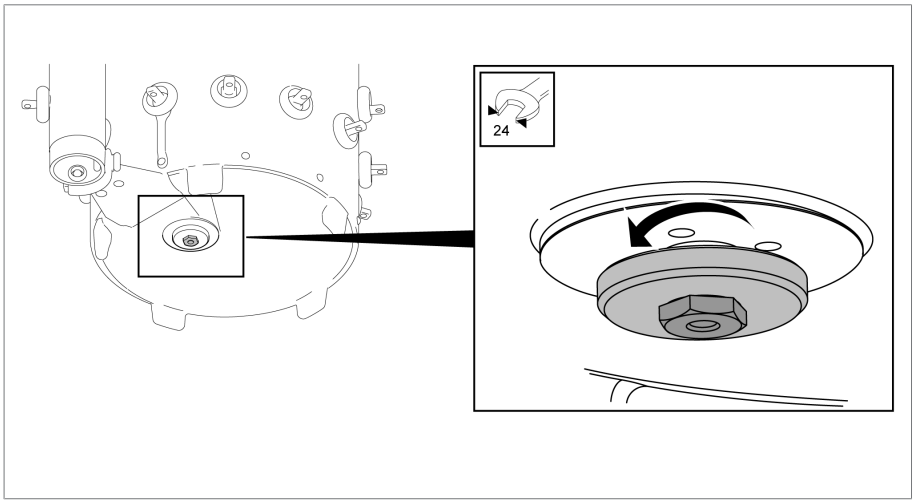

Figure 28: Kerosene drain plug

2. **NOTICE!** Remove the on-load tap-changer head cover (24 screws M10/ wrench size 17 with locking washers) and store it outside the autoclave. If this is not done, the on-load tap-changer head cover may be damaged.
3. **NOTICE!** Remove on-load tap-changer accessories and store outside autoclave: motor-drive unit, drive shaft, protective relay, bevel gear, temperature sensor. If this is not done, the on-load tap-changer accessories may be damaged.

Vapor-phase drying in the autoclave

1. Supply kerosene vapor at a temperature of around 90°C. Keep this temperature constant for 3 to 4 hours.

2. Increase the kerosene vapor temperature by approx. 10°C/hour to the desired final temperature of max. 125°C at the on-load tap-changer.
3. Vacuum-dry on-load tap-changer at between 105°C and maximum 125°C for at least 50 hours.
4. Residual pressure of no more than 10^{-3} bar.

► **NOTICE!** Close kerosene drain plug clockwise (tightening torque 39 Nm). An open kerosene drain plug leads to oil escaping from the oil compartment and therefore to damage to the on-load tap-changer and transformer.

5.3.6 Drying on-load tap-changer in transformer tank

Dry on-load tap-changer in accordance with the following instructions to ensure the dielectric values assured by MR on the on-load tap-changer.

If you want to dry the on-load tap-changer in the transformer tank, fully assemble the transformer first and then undertake drying.

If drying in the transformer tank, the following methods are possible:

- Vacuum-drying
- Vapor-phase drying

As an alternative to drying the on-load tap-changer in the transformer tank, it can also be dried in an autoclave.

5.3.6.1 Vacuum-drying in the transformer tank

The on-load tap-changer head cover remains closed during the entire drying process.

1. Establish a connecting lead between either connections E2 and Q or connections E2 and R on the on-load tap-changer head.

2. Seal off unused pipe connections and pipe bends with a suitable blank cover.

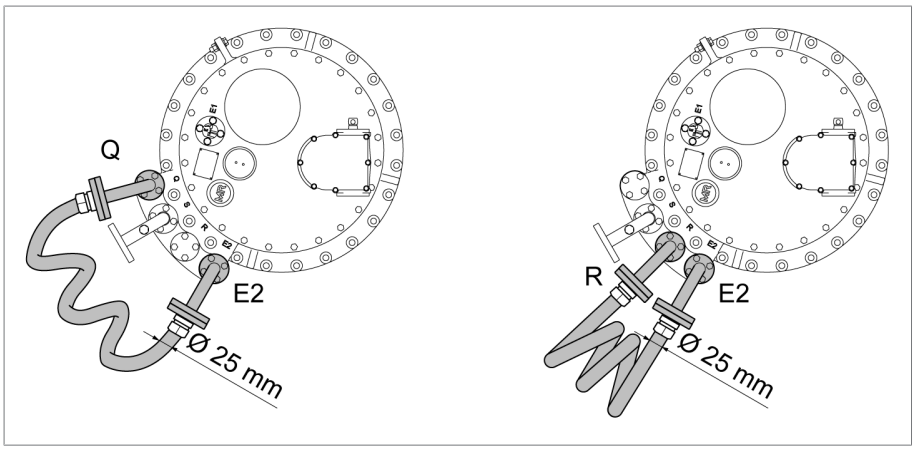

Figure 29: Connecting lead

Vacuum-drying in the transformer tank

1. Heat up the on-load tap-changer in air at atmospheric pressure with a temperature increase of approximately 10 °C/h to a final temperature of maximum 110 °C.
2. Pre-dry the on-load tap-changer in circulating air at a maximum temperature of 110 °C for a period of at least 20 hours.
3. Vacuum-dry on-load tap-changer at between 105 °C and maximum 125 °C for at least 50 hours.
4. Residual pressure of no more than 10^{-3} bar.

5.3.6.2 Vapor-phase drying in the transformer tank

If you have opened the kerosene drain plug already (e.g. after the transformer ratio test), you can begin the drying right away.

Otherwise, you first have to open the kerosene drain plug before you can begin the drying.

1. Remove on-load tap-changer insert. Please request the documents for removal from Maschinenfabrik Reinhausen GmbH.

2. Unscrew kerosene drain plug in base of oil compartment clockwise. The kerosene drain plug cannot be unscrewed all the way.

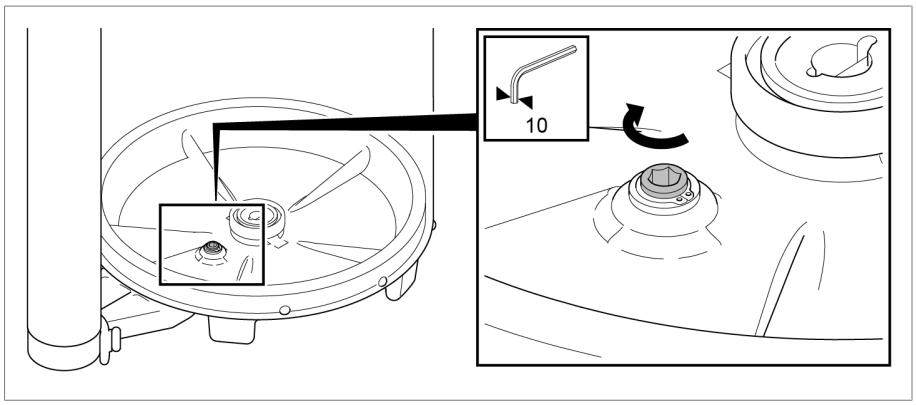

Figure 30: Kerosene drain plug

3. Insert on-load tap-changer insert. Please request the documents for installation from Maschinenfabrik Reinhausen GmbH.
4. Connect pipe connections R and Q of on-load tap-changer head to the kerosene vapor lead using one shared lead.

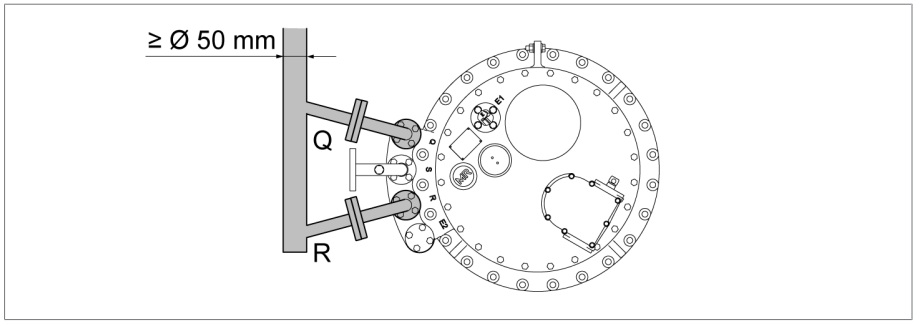

Figure 31: Kerosene vapor lead

5. Seal off unused pipe connections and pipe bends with a suitable blank cover.

Vapor-phase drying in the transformer tank

1. Supply kerosene vapor at a temperature of around 90°C. Keep this temperature constant for 3 to 4 hours.
2. Increase the kerosene vapor temperature by approx. 10°C/hour to the desired final temperature of max. 125°C at the on-load tap-changer.
3. Vacuum-dry on-load tap-changer at between 105°C and maximum 125°C for at least 50 hours.
4. Residual pressure of no more than 10^{-3} bar.

After drying, proceed as follows to close the kerosene drain plug again:

1. Remove on-load tap-changer insert.

2. **NOTICE!** An open kerosene drain plug leads to oil escaping from the oil compartment and therefore to damage to the on-load tap-changer. Close kerosene drain plug counter-clockwise (tightening torque 39 Nm).
3. Insert on-load tap-changer insert.

5.3.7 Filling the oil compartment of the on-load tap-changer with insulating fluid

NOTICE

Damage to the on-load tap-changer!

Unsuitable insulating fluids cause damage to the on-load tap-changer.

► Use insulating fluids that meet the requirements in accordance with IEC 60296.

► If approved by the transformer manufacturer, you can use synthetic esters in accordance with IEC 61099 approved by Maschinenfabrik Reinhausen GmbH.

After drying, completely fill the oil compartment (diverter switch insert fitted) with oil again as soon as possible so that an impermissible amount of humidity is not absorbed from the surroundings.

1. Establish a connecting lead between pipe connection E2 and one of the pipe connections R, S or Q to ensure equal pressure in the oil compartment and transformer during evacuation.

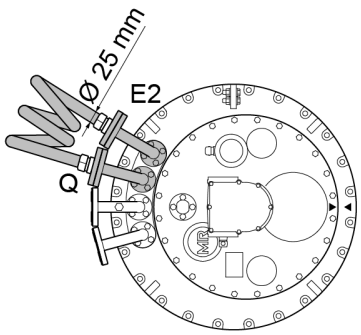

Figure 32: Connecting lead between E2 and Q

2. Fill on-load tap-changer with new insulating fluid using one of the two free pipe connections of the on-load tap-changer head.

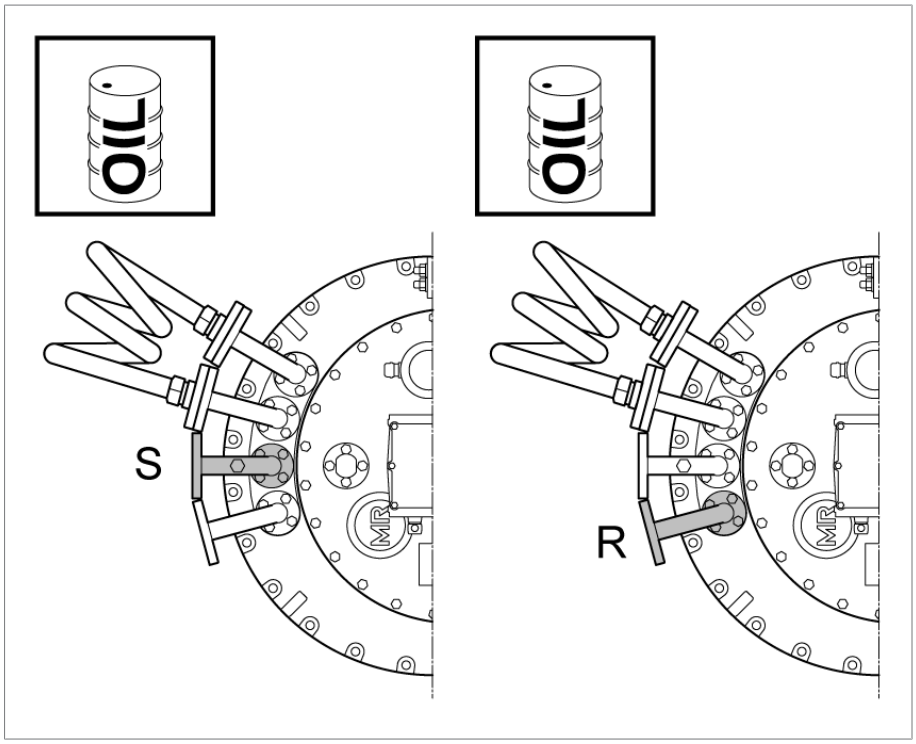

Figure 33: Pipe connections S and R

5.3.8 Performing transformer ratio test after drying

NOTICE

Damage to the on-load tap-changer!

Damage to the on-load tap-changer due to transformer ratio test being incorrectly performed.

- ► Ensure that the selector / de-energized tap changer is fully immersed in the insulating fluid and that the oil compartment of the on-load tap-changer is completely filled with insulating fluid.
- ► Only switch the on-load tap-changer from one operating position to the next via the upper gear unit. You can use a short tube (diameter 25 mm) with screwed-in coupling bolt (diameter 12 mm) with a hand wheel or crank for this, for example. When using a drill, do not exceed a maximum speed of 250 rpm.
- ► Always check the operating position reached through the inspection window in the on-load tap-changer head cover. Never overshoot the end positions, which are indicated in the connection diagram supplied with the delivery.
- ► For multiple-column applications with a shared drive, link all on-load tap-changer heads to one another using the horizontal drive shaft part.

When actuating the change-over selector, a higher torque is required.

1. Switch the on-load tap-changer into the desired operating position. The diverter switch operation can be heard distinctly.
2. **NOTICE!** An incomplete tap-change operation may damage the on-load tap-changer. After operating the diverter switch, continue to crank the drive shaft of the upper gear unit for 2.5 revolutions in the same direction in order to correctly complete the tap-change operation.
3. Perform the transformer ratio test.
4. Repeat the transformer ratio test in all operating positions.
5. Switch the on-load tap-changer into adjustment position (see the accompanying connection diagram for the on-load tap-changer).

5.4 Installing on-load tap-changer in transformer (bell-type tank version)

5.4.1 Inserting on-load tap-changer into supporting structure

1. Remove red-colored packaging material and transport material from on-load tap-changer.

2. **NOTICE!** Tensile forces can lead to damage and malfunctions on the on-load tap-changer. Using spacers, insert on-load tap-changer vertically into supporting structure (maximum 1° deviation from the vertical) so that the on-load tap-changer reaches its final installation height and only has to be raised a maximum of 5 to 20 mm after fitting the bell-type tank.

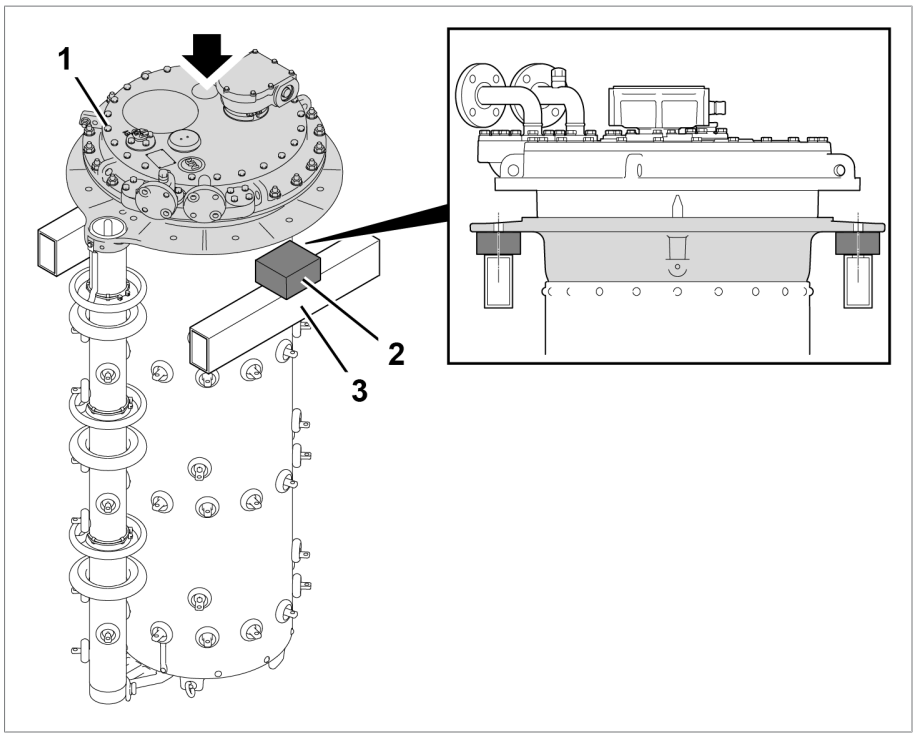

Figure 34: Supporting structure

3. Temporarily fasten on-load tap-changer to supporting structure. The supporting flange has through holes for this purpose.

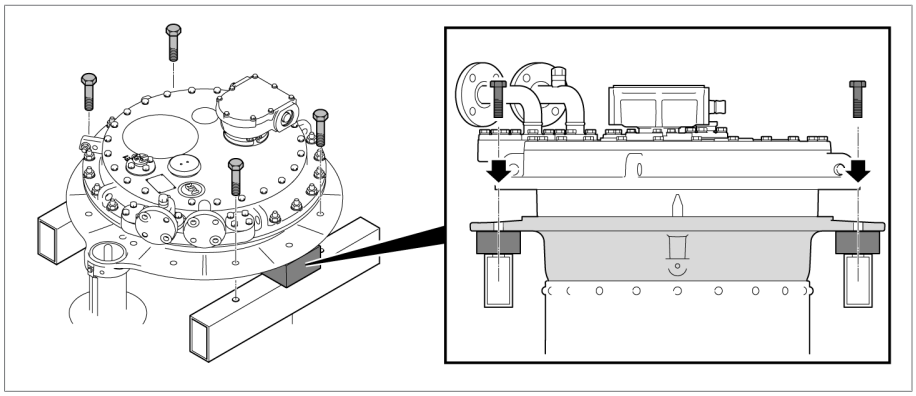

Figure 35: Temporary fastening

5.4.2 Connecting the tap winding and on-load tap-changer take-off lead

NOTICE

Damage to the on-load tap-changer!

Connecting leads which place mechanical strain on the on-load tap-changer will damage the on-load tap-changer!

- ► Establish and secure connections with care.
- ► Do not twist connection contacts.
- ► Connect connecting leads without warping or deforming.
- ► If necessary use an expansion loop for connecting leads.

1. Connect tap winding and on-load tap-changer take-off lead in accordance with the connection diagram included with the delivery.
2. If connection leads have to cross the open surface of the oil compartment/ change-over selector, there must be a clearance of 50 mm between the connecting leads and the surface of the oil compartment/change-over selector.

The designations of the on-load tap-changer's connection contacts are shown in the connection diagram. The connection contacts are provided with vertical through-holes (11 mm diameter for M10 screws, see appendix [►Section 9.4, Page 138]).

5.4.3 Performing transformer ratio test before drying

NOTICE

Damage to the on-load tap-changer!

Damage to the on-load tap-changer due to transformer ratio test being incorrectly performed.

- ► Do not perform more than 250 tap-change operations on the on-load tap-changer. If more than 250 tap-change operations are to be performed, completely fill the oil compartment with insulating fluid and lubricate sliding surfaces of contacts on the selector and selector gear with insulating fluid.
- ► Only switch the on-load tap-changer from one operating position to the next via the upper gear unit. You can use a short tube (diameter 25 mm) with screwed-in coupling bolt (diameter 12 mm) with a hand wheel or crank for this, for example. When using a drill, do not exceed a maximum speed of 250 rpm.
- ► Always check the operating position reached through the inspection window in the on-load tap-changer head cover. Never overshoot the end positions, which are indicated in the connection diagram supplied with the delivery.
- ► For multiple-column applications with a shared drive, link all on-load tap-changer heads to one another using the horizontal drive shaft parts.

When actuating the change-over selector, a higher torque is required.

1. Switch the on-load tap-changer into the desired operating position. The diverter switch operation can be heard distinctly.
2. **NOTICE!** An incomplete tap-change operation may damage the on-load tap-changer. After operating the diverter switch, continue to crank the drive shaft of the upper gear unit for 2.5 revolutions in the same direction in order to correctly complete the tap-change operation.
3. Perform the transformer ratio test.
4. Repeat the transformer ratio test in all operating positions.
5. Switch the on-load tap-changer into adjustment position (see the accompanying connection diagram for the on-load tap-changer).

After the transformer ratio test, open the kerosene drain plug in the oil compartment if the on-load tap-changer is to be dried with kerosene in the transformer tank. After drying, the diverter switch insert must be removed, the kerosene drain plug in the oil compartment closed and the diverter switch insert refitted.

5.4.4 Performing DC resistance measurement on transformer

The measured DC current is normally restricted to 10% of the rated current of the measured transformer winding in order to prevent the winding from overheating.

Perform the DC resistance measurement in various on-load tap-changer operating positions. You need to distinguish here whether the measured current is interrupted when changing operating position or not.

Status of oil compartment	Without interruption in measured current	With interruption (measured current = 0 A before change of operating position)
Oil compartment empty	Maximum 10 A DC	Maximum 50 A DC
Oil compartment filled with insulating fluid	Maximum 50 A DC	Maximum 50 A DC

Table 12: Maximum permitted measured currents when performing DC resistance measurement on transformer

5.4.5 Drying on-load tap-changer in autoclave

NOTICE

Damage to the on-load tap-changer!

Moisture in the oil compartment reduces the dielectric strength of the insulating fluid and thus leads to damage to the on-load tap-changer.

► Within 10 hours of drying, seal off oil compartment with on-load tap-changer head cover.

Dry on-load tap-changer in accordance with the following instructions to ensure the dielectric values assured by MR for the on-load tap-changer.

If drying in an autoclave, the following methods are possible:

- Vacuum drying
- Vapor-phase drying

As an alternative to drying the on-load tap-changer in an autoclave, it can also be dried in the transformer tank.

5.4.5.1 Vacuum-drying in the autoclave

Before starting vacuum-drying in the autoclave, you must remove the on-load tap-changer head cover and on-load tap-changer accessories:

1. **NOTICE!** Remove the on-load tap-changer head cover (24 screws M10/ wrench size 17 with safety elements) and store it outside the autoclave. If this is not done, the on-load tap-changer head cover may be damaged.
2. **NOTICE!** Remove on-load tap-changer accessories and store outside autoclave: motor-drive unit, drive shaft, protective relay, bevel gear, temperature sensor. If this is not done, the on-load tap-changer accessories may be damaged.

Vacuum-drying in the autoclave

1. Heat up the on-load tap-changer in air at atmospheric pressure with a temperature increase of approximately 10 °C/h to a final temperature of maximum 110 °C.
2. Pre-dry the on-load tap-changer in circulating air at a maximum temperature of 110 °C for a period of at least 20 hours.
3. Vacuum-dry on-load tap-changer at between 105 °C and maximum 125 °C for at least 50 hours.
4. Residual pressure of no more than 10^{-3} bar.

5.4.5.2 Vapor-phase drying in the autoclave

For vapor-phase drying in the autoclave, you must open the kerosene drain plug in the oil compartment base before drying so that the kerosene condensate can drain from the oil compartment.

1. Unscrew kerosene drain plug in base of oil compartment counter-clockwise. The kerosene drain plug cannot be unscrewed all the way.

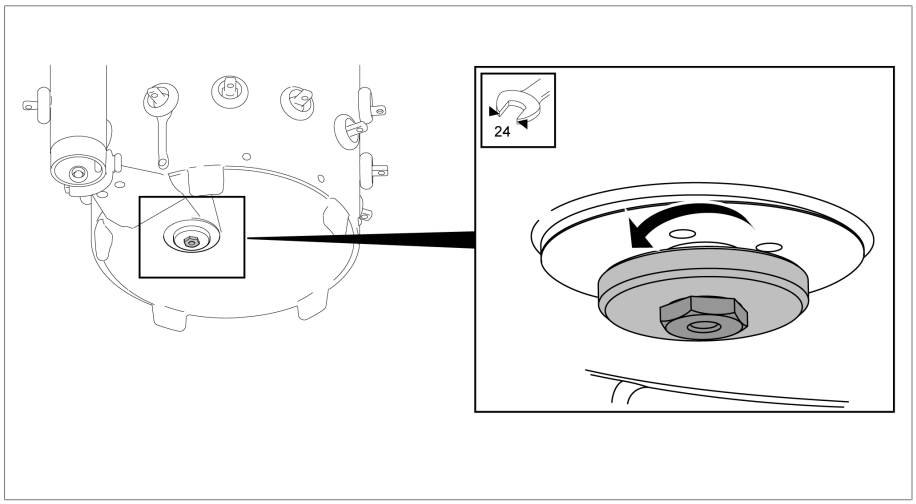

Figure 36: Kerosene drain plug

2. **NOTICE!** Remove the on-load tap-changer head cover (24 screws M10/ wrench size 17 with locking washers) and store it outside the autoclave. If this is not done, the on-load tap-changer head cover may be damaged.
3. **NOTICE!** Remove on-load tap-changer accessories and store outside autoclave: motor-drive unit, drive shaft, protective relay, bevel gear, temperature sensor. If this is not done, the on-load tap-changer accessories may be damaged.

Vapor-phase drying in the autoclave

1. Supply kerosene vapor at a temperature of around 90°C. Keep this temperature constant for 3 to 4 hours.
2. Increase the kerosene vapor temperature by approx. 10°C/hour to the desired final temperature of max. 125°C at the on-load tap-changer.
3. Vacuum-dry on-load tap-changer at between 105°C and maximum 125°C for at least 50 hours.
4. Residual pressure of no more than 10^{-3} bar.

► **NOTICE!** Close kerosene drain plug clockwise (tightening torque 39 Nm). An open kerosene drain plug leads to oil escaping from the oil compartment and therefore to damage to the on-load tap-changer and transformer.

5.4.6 Lifting top part of on-load tap-changer head off supporting flange (bottom part)

⚠ WARNING

Danger of explosion!

Explosive gases under the on-load tap-changer head cover can deflagrate or explode and result in severe injury or death.

- ► Ensure that there are no ignition sources such as open flames, hot surfaces or sparks (e.g. caused by the build-up of static charge) in the immediate surroundings and that none occur.
- ► De-energize all auxiliary circuits (for example tap-change supervisory device, pressure relief device, pressure monitoring device) before removing the on-load tap-changer head cover.
- ► Do not operate any electrical devices during the work (e.g. risk of sparks from impact wrench).

NOTICE

Damage to the on-load tap-changer!

Small parts in the oil compartment may block the diverter switch insert, thereby damaging the on-load tap-changer.

- ► Ensure that parts do not fall into the oil compartment.
- ► Check that all small parts are accounted for.

1. Ensure that the on-load tap-changer is in the adjustment position. The adjustment position is indicated in the on-load tap-changer connection diagram included in delivery.
2. Ensure that the inspection window is sealed off with the cover.
3. Remove temporary fastening and spacers and slowly lower the on-load tap-changer.

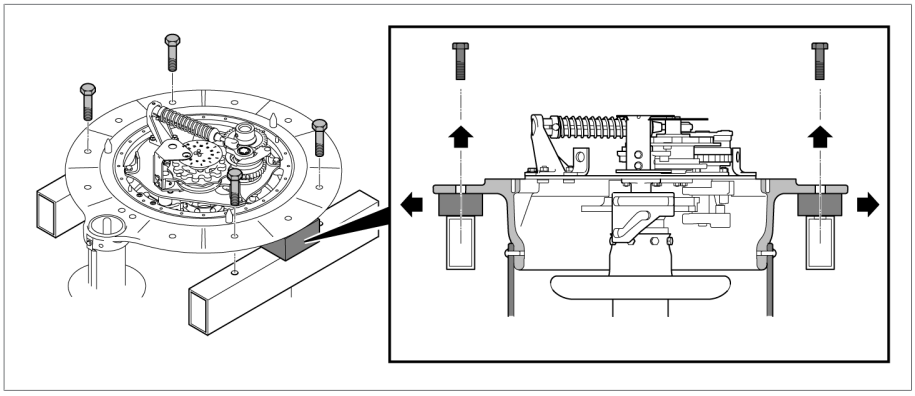

Figure 37: Temporary fastening

4. Remove screws and locking washers on on-load tap-changer head cover.

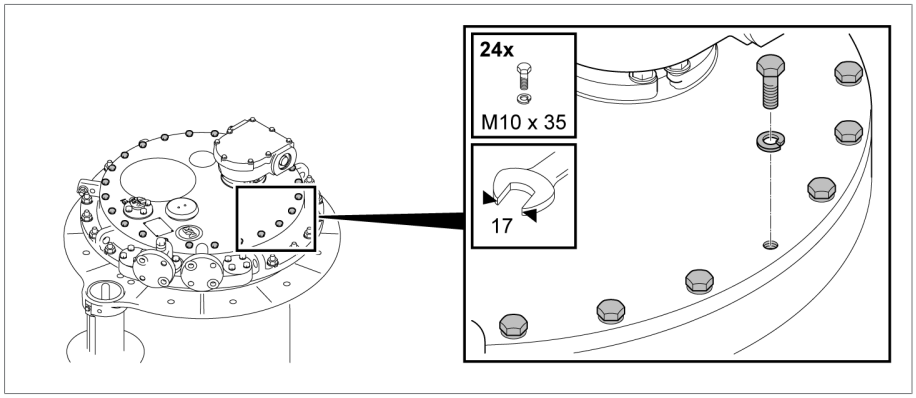

Figure 38: On-load tap-changer head cover

5. Remove on-load tap-changer head cover.

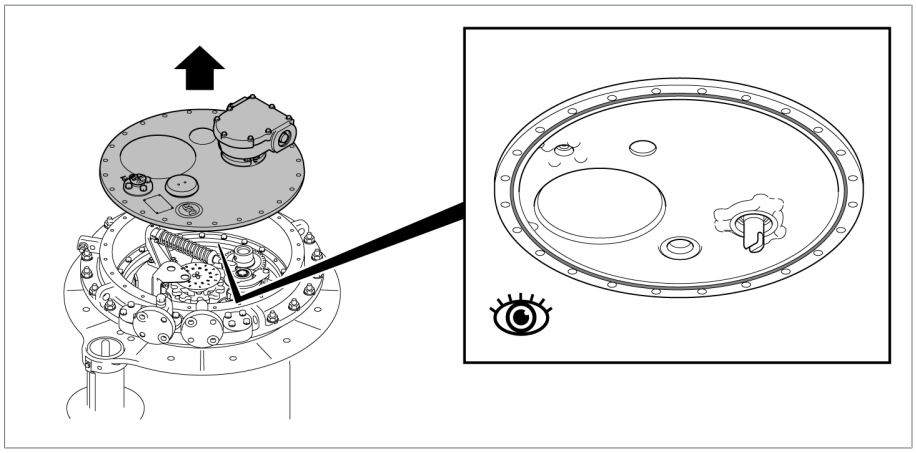

Figure 39: On-load tap-changer head cover

6. For design with oil suction pipe, loosen screw connection of R3/4" oil suction pipe. Check for leaks.

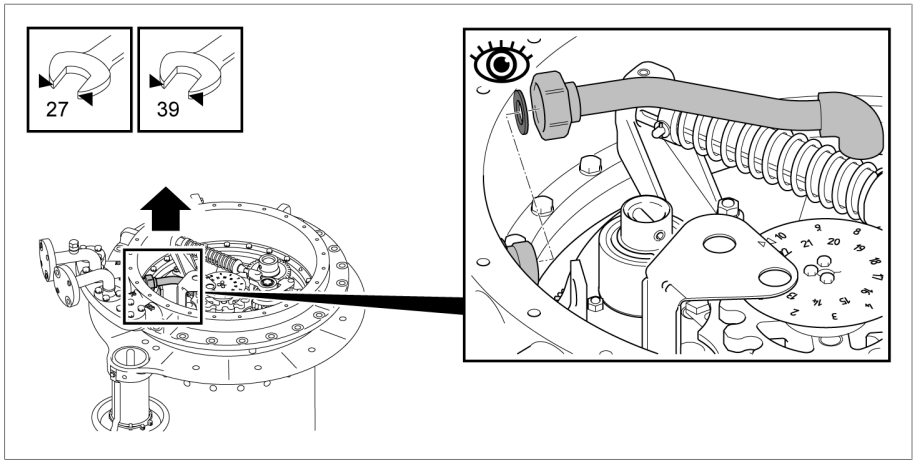

Figure 40: Oil suction pipe

7. Remove bolts and locking washers between top part of on-load tap-changer head and supporting flange.

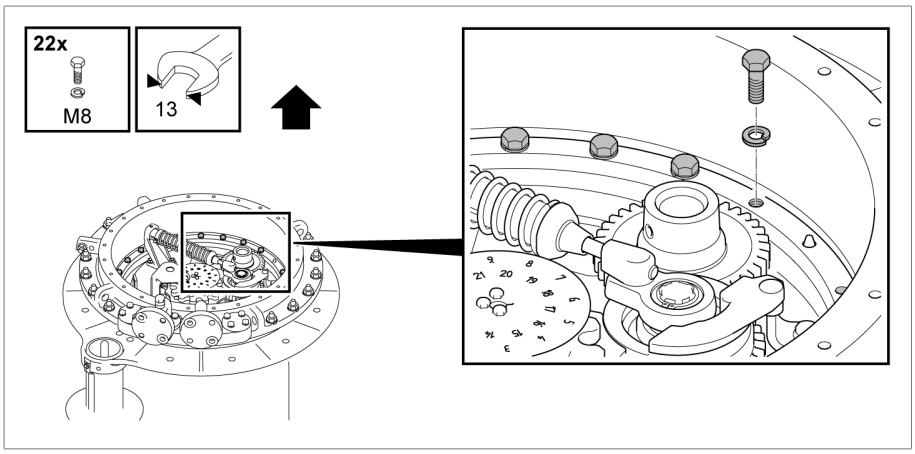

Figure 41: On-load tap-changer head

8. Lift top part of on-load tap-changer head off supporting flange.

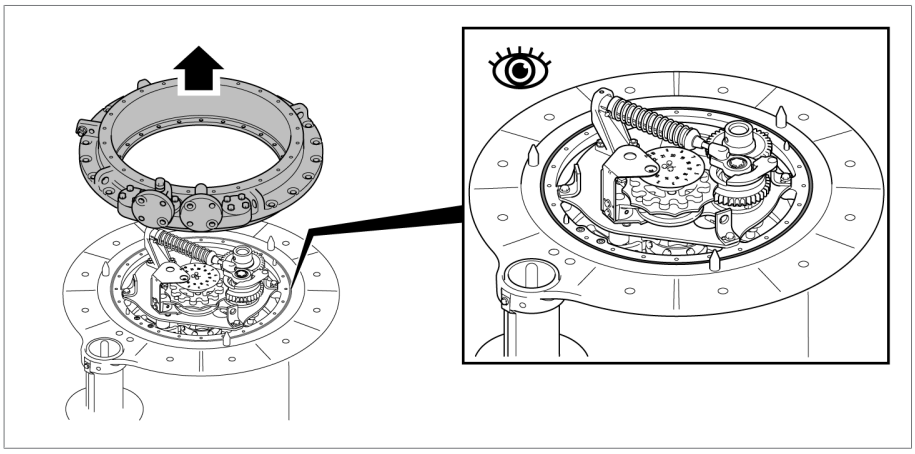

Figure 42: Top part of on-load tap-changer head

5.4.7 Attaching the bell-type tank and connecting the on-load tap-changer to the top part of the on-load tap-changer head

5.4.7.1 Attaching bell-type tank

1. Clean sealing surface of supporting flange, place o-ring on supporting flange.

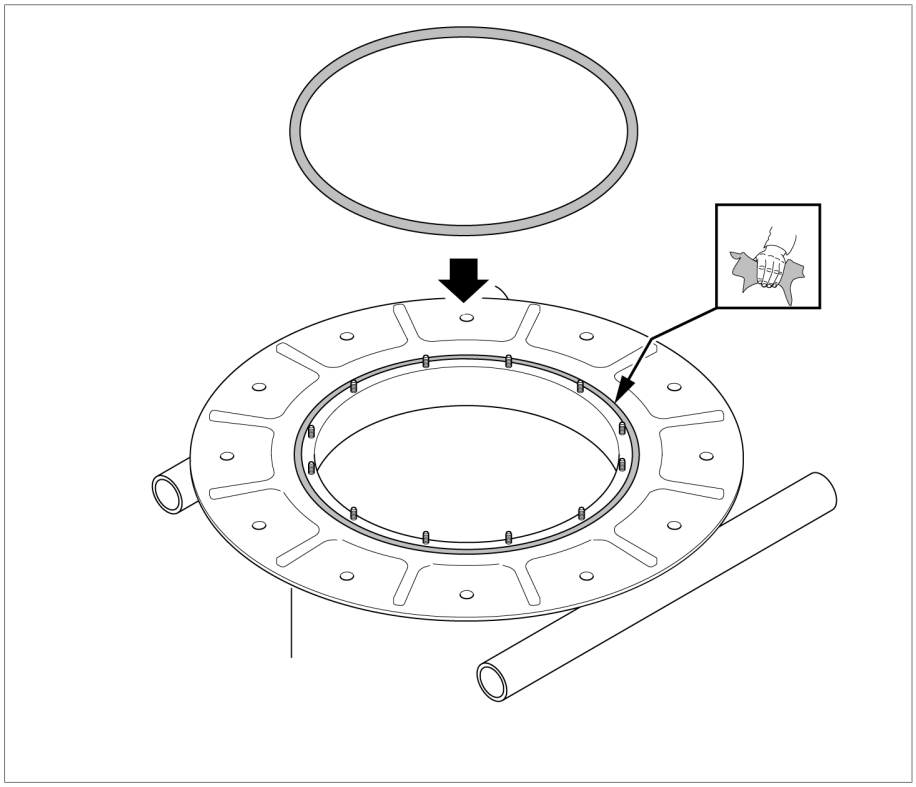

Figure 43: Supporting flange with o-ring

2. Lift the bell-type tank over the active part of the transformer.

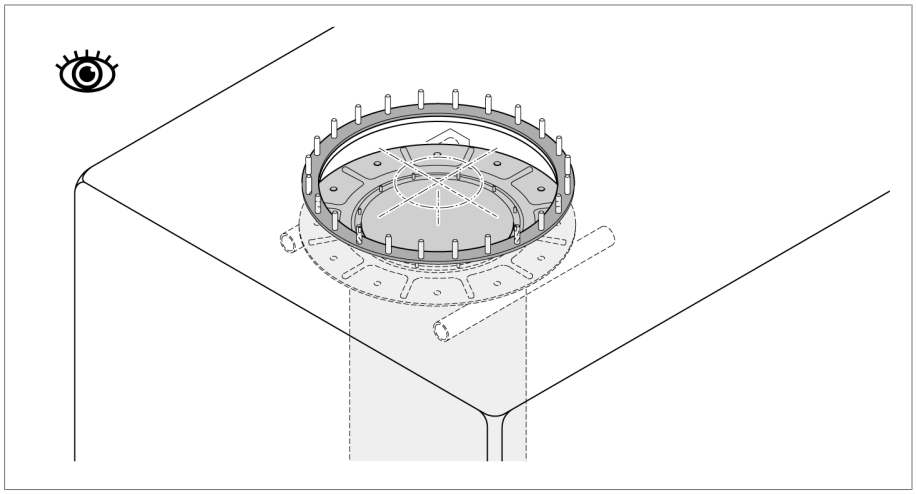

Figure 44: Bell-type tank

5.4.7.2 Positioning top part of on-load tap-changer head on bell-type tank

1. Clean sealing surfaces on mounting flange and on-load tap-changer head, place oil-resistant gasket on mounting flange.

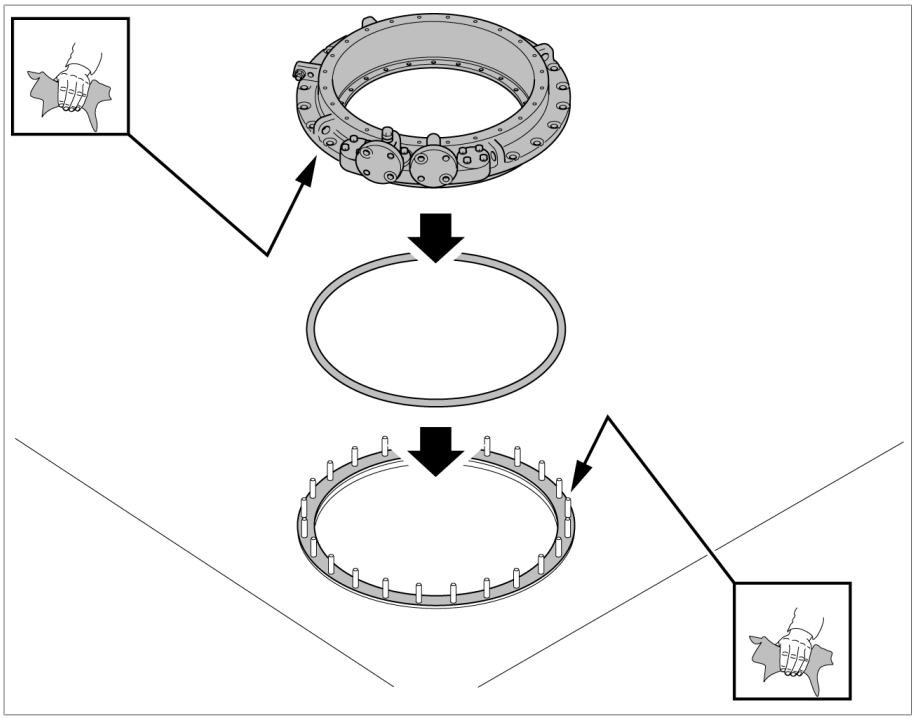

Figure 45: Mounting flange and on-load tap-changer head

2. Position top part of on-load tap-changer head on mounting flange.

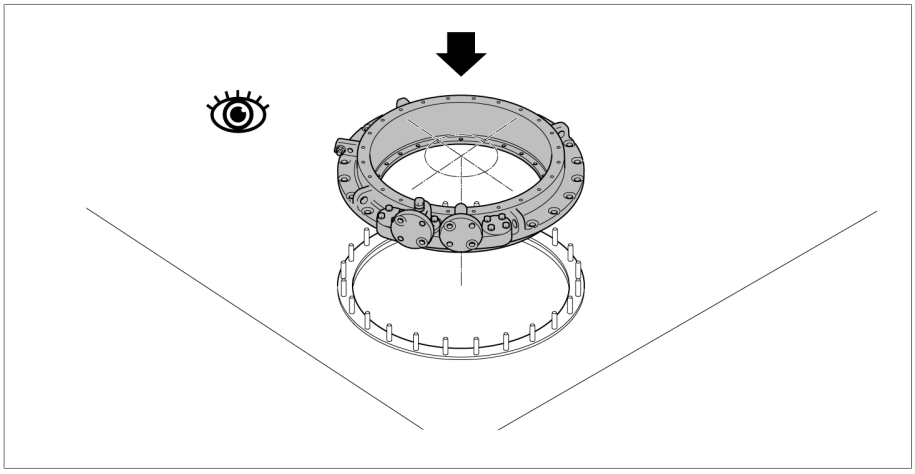

Figure 46: On-load tap-changer head

For design without oil suction pipe, the on-load tap-changer head can be turned towards the supporting flange in 15° steps. For design with oil suction pipe, turning at 15° increments is not possible.

When positioning the on-load tap-changer head, do however note that the tap-change supervisory control restricts the swivel range of the upper gear unit.

5.4.7.3 Connecting on-load tap-changer to top part of on-load tap-changer head

NOTICE

Damage to the on-load tap-changer!

A missing or damaged o-ring as well as unclean sealing surfaces lead to insulating fluid escaping and therefore to damage to the on-load tap-changer.

- ► Ensure that the o-ring is positioned untwisted in the on-load tap-changer head cover.
- ► Ensure that the o-ring does not become damaged when mounting the cover.
- ► Ensure that the sealing surfaces on the on-load tap-changer head cover and on-load tap-changer head are clean.

1. **NOTICE!** Incorrectly lifting the on-load tap-changer will damage it. Secure 4 ropes of equal length (at least 1 m in length) to the attachment points provided and slowly lift on-load tap-changer from below towards on-load tap-changer head. Under no circumstances should the on-load tap-changer be lifted up with the fixing bolts. Ensure that all supporting flange stud bolts go easily through the mounting holes of the on-load tap-changer head.

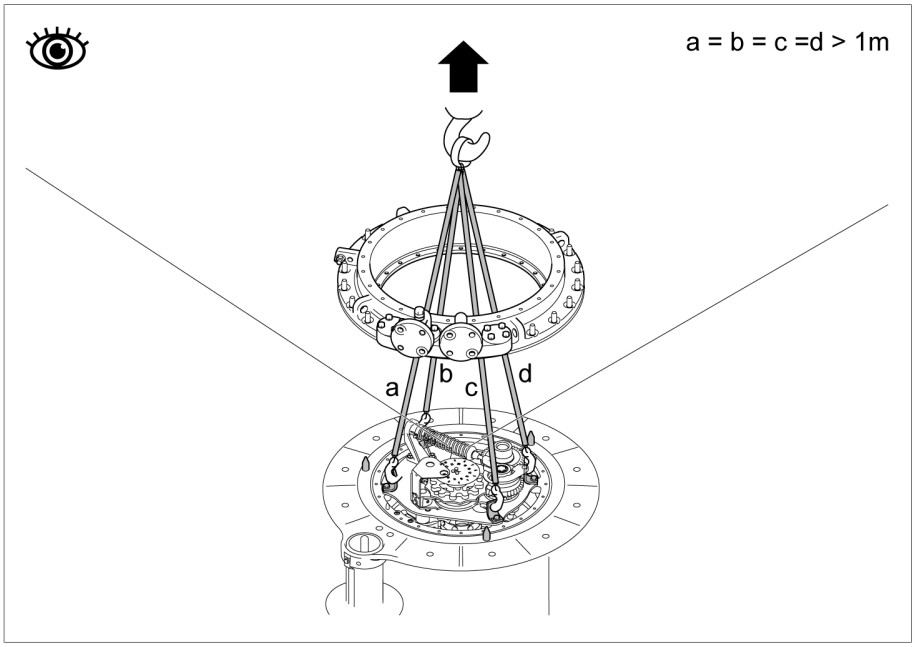

Figure 47: On-load tap-changer

2. Screw the top part to the bottom part of the on-load tap-changer head.

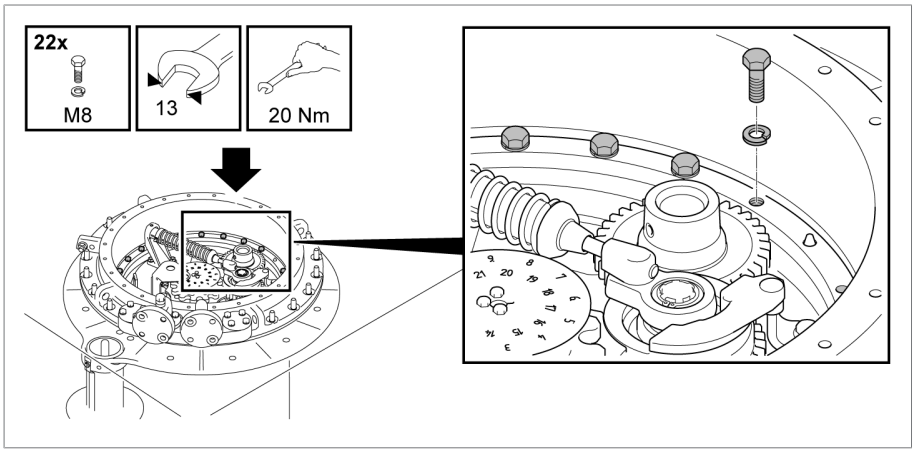

Figure 48: On-load tap-changer head

3. For design with oil suction pipe, connect oil suction pipe screw connection. Check for leaks.

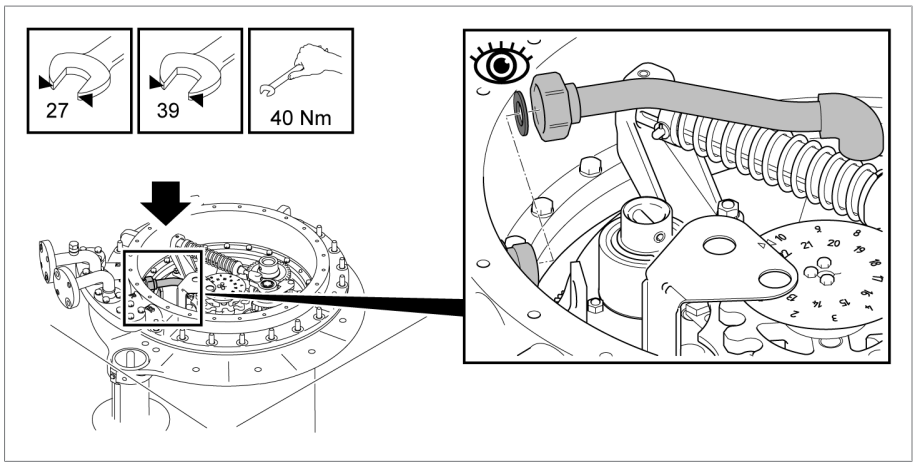

Figure 49: Oil suction pipe

4. Screw the on-load tap-changer head to the mounting flange. The tightening torque depends on the screw connection elements used.

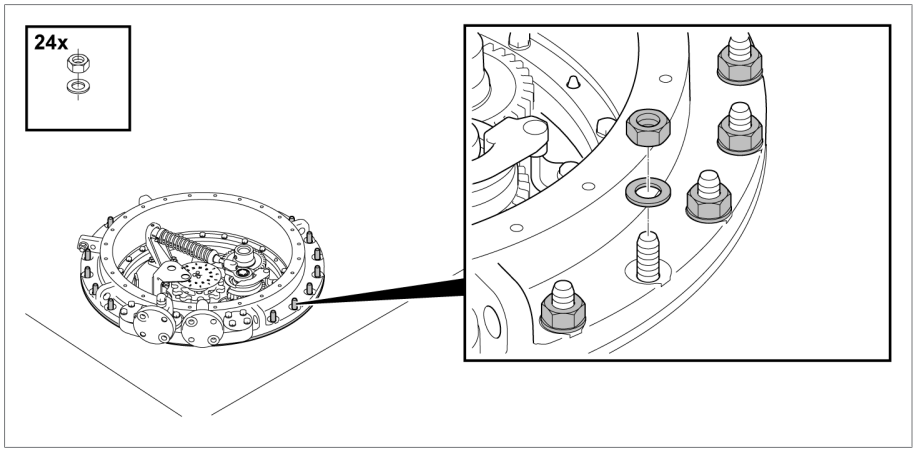

Figure 50: On-load tap-changer head

5. Place on-load tap-changer head cover on on-load tap-changer head and secure.

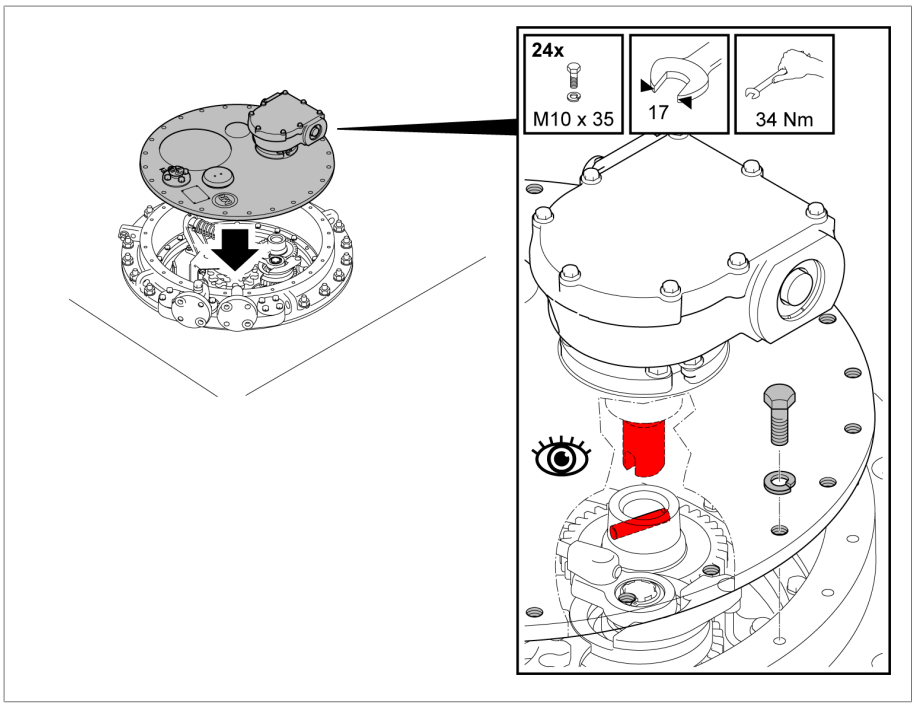

Figure 51: On-load tap-changer head cover

5.4.8 Drying on-load tap-changer in transformer tank

Dry on-load tap-changer in accordance with the following instructions to ensure the dielectric values assured by MR on the on-load tap-changer.

If you want to dry the on-load tap-changer in the transformer tank, fully assemble the transformer first and then undertake drying.

If drying in the transformer tank, the following methods are possible:

- Vacuum-drying
- Vapor-phase drying

As an alternative to drying the on-load tap-changer in the transformer tank, it can also be dried in an autoclave.

5.4.8.1 Vacuum-drying in the transformer tank

The on-load tap-changer head cover remains closed during the entire drying process.

1. Establish a connecting lead between either connections E2 and Q or connections E2 and R on the on-load tap-changer head.

2. Seal off unused pipe connections and pipe bends with a suitable blank cover.

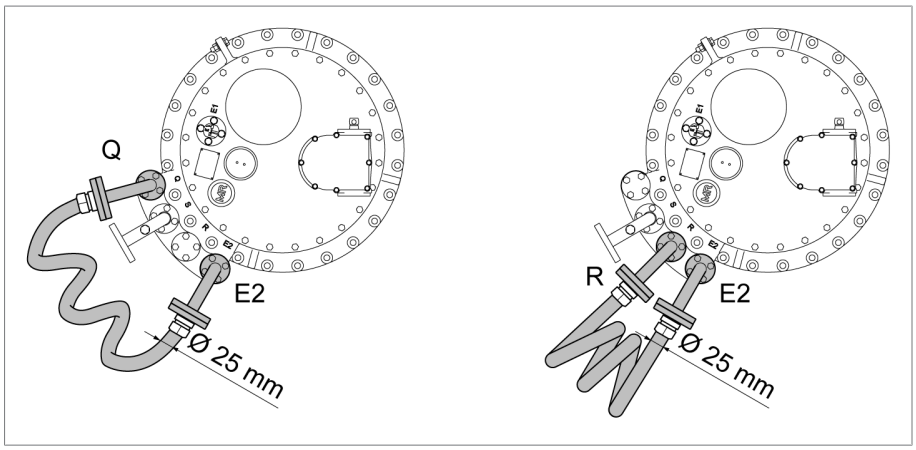

Figure 52: Connecting lead

Vacuum-drying in the transformer tank

1. Heat up the on-load tap-changer in air at atmospheric pressure with a temperature increase of approximately 10 °C/h to a final temperature of maximum 110 °C.
2. Pre-dry the on-load tap-changer in circulating air at a maximum temperature of 110 °C for a period of at least 20 hours.
3. Vacuum-dry on-load tap-changer at between 105 °C and maximum 125 °C for at least 50 hours.
4. Residual pressure of no more than 10^{-3} bar.

5.4.8.2 Vapor-phase drying in the transformer tank

If you have opened the kerosene drain plug already (e.g. after the transformer ratio test), you can begin the drying right away.

Otherwise, you first have to open the kerosene drain plug before you can begin the drying.

1. Remove on-load tap-changer insert. Please request the documents for removal from Maschinenfabrik Reinhausen GmbH.

2. Unscrew kerosene drain plug in base of oil compartment clockwise. The kerosene drain plug cannot be unscrewed all the way.

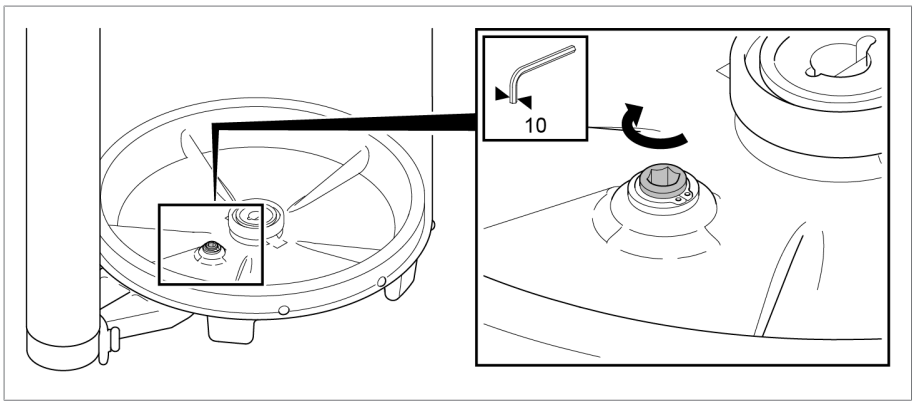

Figure 53: Kerosene drain plug

3. Insert on-load tap-changer insert. Please request the documents for installation from Maschinenfabrik Reinhausen GmbH.
4. Connect pipe connections R and Q of on-load tap-changer head to the kerosene vapor lead using one shared lead.

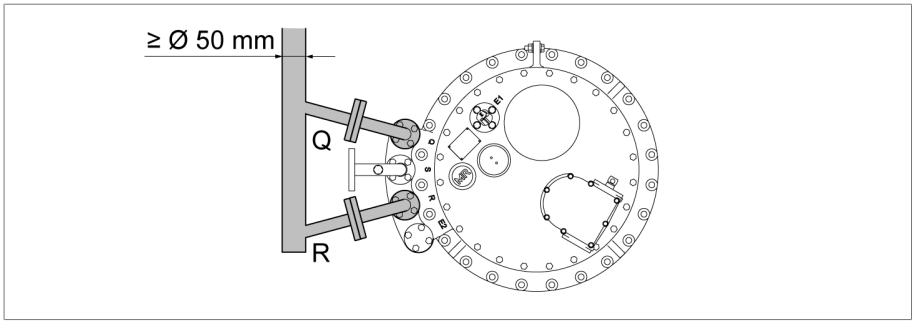

Figure 54: Kerosene vapor lead

5. Seal off unused pipe connections and pipe bends with a suitable blank cover.

Vapor-phase drying in the transformer tank

1. Supply kerosene vapor at a temperature of around 90°C. Keep this temperature constant for 3 to 4 hours.
2. Increase the kerosene vapor temperature by approx. 10°C/hour to the desired final temperature of max. 125°C at the on-load tap-changer.
3. Vacuum-dry on-load tap-changer at between 105°C and maximum 125°C for at least 50 hours.
4. Residual pressure of no more than 10^{-3} bar.

After drying, proceed as follows to close the kerosene drain plug again:

1. Remove on-load tap-changer insert.

2. **NOTICE!** An open kerosene drain plug leads to oil escaping from the oil compartment and therefore to damage to the on-load tap-changer. Close kerosene drain plug counter-clockwise (tightening torque 39 Nm).
3. Insert on-load tap-changer insert.

5.4.9 Filling the oil compartment of the on-load tap-changer with insulating fluid

NOTICE

Damage to the on-load tap-changer!

Unsuitable insulating fluids cause damage to the on-load tap-changer.

- ► Use insulating fluids that meet the requirements in accordance with IEC 60296.
- ► If approved by the transformer manufacturer, you can use synthetic esters in accordance with IEC 61099 approved by Maschinenfabrik Reinhausen GmbH.

After drying, completely fill the oil compartment (diverter switch insert fitted) with oil again as soon as possible so that an impermissible amount of humidity is not absorbed from the surroundings.

1. Establish a connecting lead between pipe connection E2 and one of the pipe connections R, S or Q to ensure equal pressure in the oil compartment and transformer during evacuation.

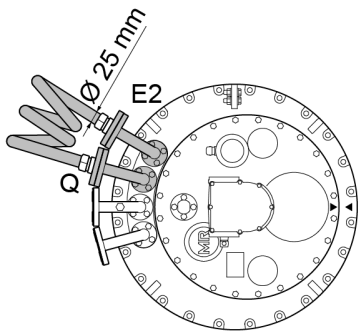

Figure 55: Connecting lead between E2 and Q

2. Fill on-load tap-changer with new insulating fluid using one of the two free pipe connections of the on-load tap-changer head.

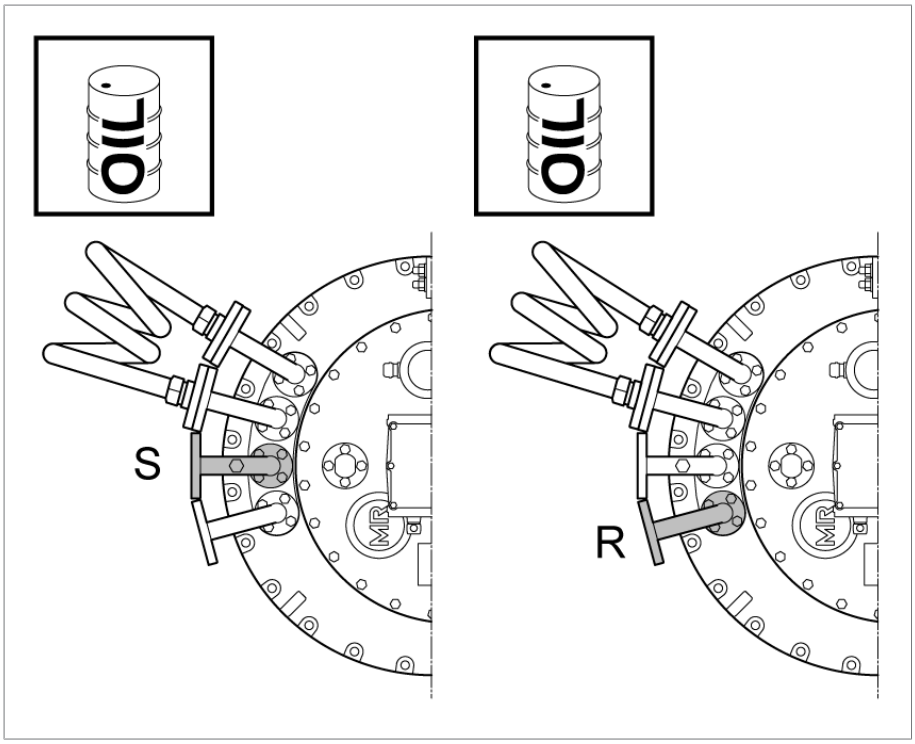

Figure 56: Pipe connections S and R

5.4.10 Performing transformer ratio test after drying

NOTICE

Damage to the on-load tap-changer!

Damage to the on-load tap-changer due to transformer ratio test being incorrectly performed.

- ► Ensure that the selector / de-energized tap changer is fully immersed in the insulating fluid and that the oil compartment of the on-load tap-changer is completely filled with insulating fluid.
- ► Only switch the on-load tap-changer from one operating position to the next via the upper gear unit. You can use a short tube (diameter 25 mm) with screwed-in coupling bolt (diameter 12 mm) with a hand wheel or crank for this, for example. When using a drill, do not exceed a maximum speed of 250 rpm.
- ► Always check the operating position reached through the inspection window in the on-load tap-changer head cover. Never overshoot the end positions, which are indicated in the connection diagram supplied with the delivery.
- ► For multiple-column applications with a shared drive, link all on-load tap-changer heads to one another using the horizontal drive shaft part.

When actuating the change-over selector, a higher torque is required.

1. Switch the on-load tap-changer into the desired operating position. The diverter switch operation can be heard distinctly.
2. **NOTICE!** An incomplete tap-change operation may damage the on-load tap-changer. After operating the diverter switch, continue to crank the drive shaft of the upper gear unit for 2.5 revolutions in the same direction in order to correctly complete the tap-change operation.
3. Perform the transformer ratio test.
4. Repeat the transformer ratio test in all operating positions.
5. Switch the on-load tap-changer into adjustment position (see the accompanying connection diagram for the on-load tap-changer).

5.5 Fitting protective devices and drive components

5.5.1 Electrically connecting the temperature sensor

Size the cable for the electrical connection of the temperature sensors such that you can turn the sensors if necessary when mounting the drive shaft.

► Electrically connect the temperature sensors in accordance with the connection diagram provided.

5.5.2 Installing protective relay in piping and connecting

⚠ WARNING

Danger of explosion!

Explosive gases in the protective relay can deflagrate or explode and result in severe injury or death.

► Wait 15 minutes after switching off the transformer before beginning further work on the protective relay so that the gases can dissipate.

► Ensure that there are no ignition sources such as naked flames, hot surfaces or sparks (e.g. caused by the build-up of static charge) in the immediate surroundings and that none occur.

► De-energize all auxiliary circuits before beginning work.

► Do not operate any electrical devices during the work (e.g. risk of sparks from impact wrench).

Always perform all transformer tests with the protective relay attached and connected.

5.5.2.1 Electrical protection

NOTICE

Damage to the connection cable!

Damage to the connection cable due to incorrect connection.

► When routing the cable, observe the manufacturer specifications.

► Avoid impermissibly tight bending radii and kinking.

You may only connect the protective relay to circuits with an external overcurrent protection device and an all-pole isolating device, enabling the equipment to be fully de-energized if required (service, maintenance etc.).

Suitable equipment includes isolating devices in accordance with IEC 60947-1 and IEC 60947-3 (e.g. circuit breakers). Observe the properties of the relevant circuits (voltage, maximum currents) when selecting the circuit breaker type. All circuits and suitable equipment such as isolating devices must satisfy the requirements on explosion protection applicable in the respective potentially explosive area.

In addition, observe the following:

- It must be easy for the operator to access the isolating device
- The isolating device must be labeled for the device and the circuits to be isolated
- The isolating device may not be a part of the power line
- The isolating device may not interrupt the main protective conductor
- The isolating device is to be rated such that the permissible disconnect times for protection against electric shock are complied with in accordance with the requirements of DIN VDE 0100-410, depending on the type of ground connection.
- The functionality of the circuit breaker tripping circuit (supply line to the circuit breaker coil) must also remain guaranteed at all times, even if the isolating device is tripped.

5.5.2.2 Checking function of protective relay

Check the function of the protective relay before installing it in piping between the on-load tap-changer head and the oil conservator. The associated contact positions for checking electrical continuity are shown in the dimensional drawing provided.

1. Loosen the three screws on the terminal box cover and lift off the terminal box cover.

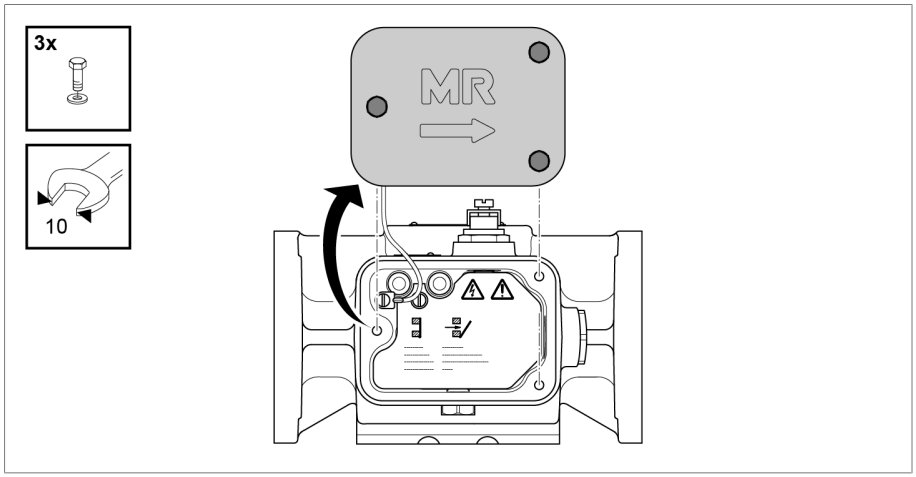

Figure 57: Terminal box cover

2. Remove the slotted head screw for potential tie-in and remove the terminal box cover with wire.

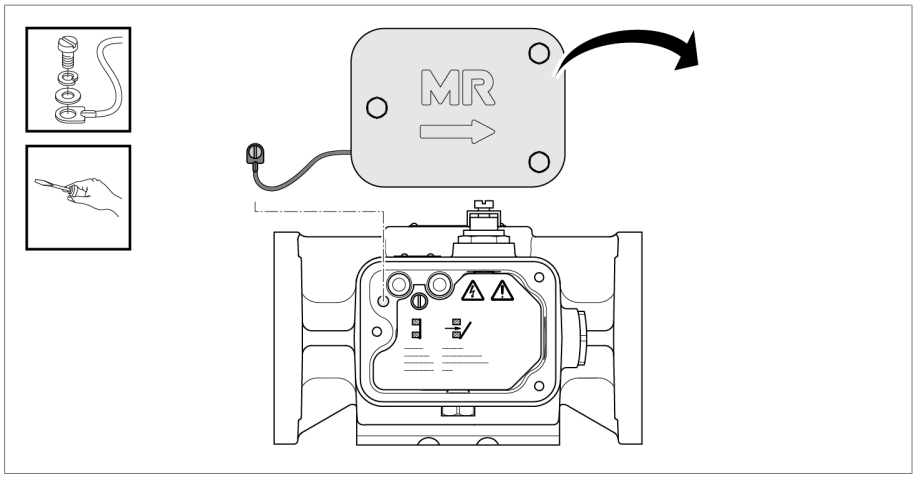

Figure 58: Terminal box cover

NOTICE

Damage to protective relay!

Damage to protective relay resulting from improper operation!

► Never press both test buttons at the same time.

3. Press OFF test button.
   ⇨ Flap valve is inclined. The red indicator is not visible.

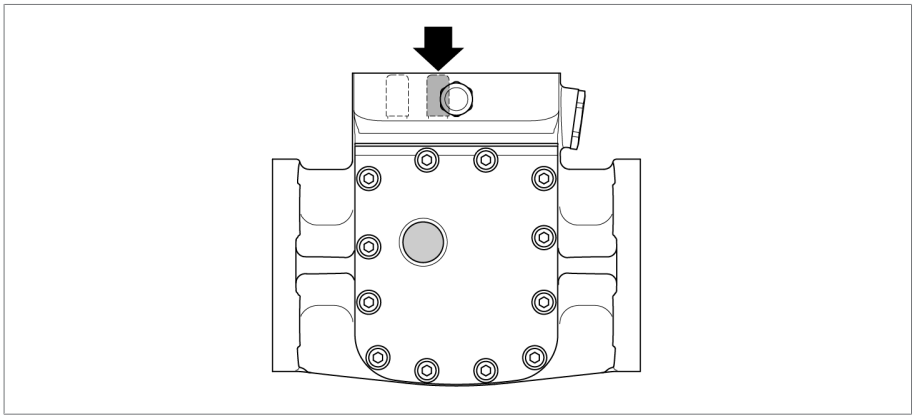

Figure 59: OFF position

4. Press OPERATION test button.
   ⇨ Flap valve is vertical. The red indicator appears in the viewing window.

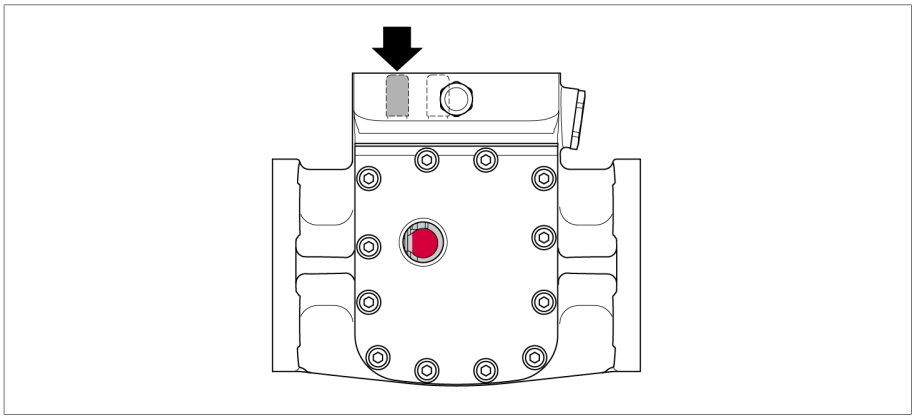

Figure 60: OPERATION position

5. Position the wire for the terminal box cover and affix using the slotted head screw.

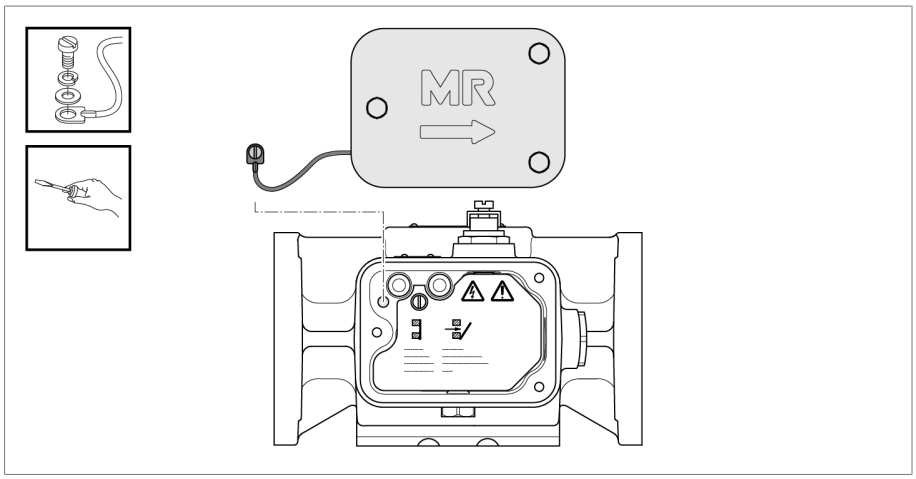

Figure 61: Terminal box cover

6. Attach the terminal box cover and secure with screws.

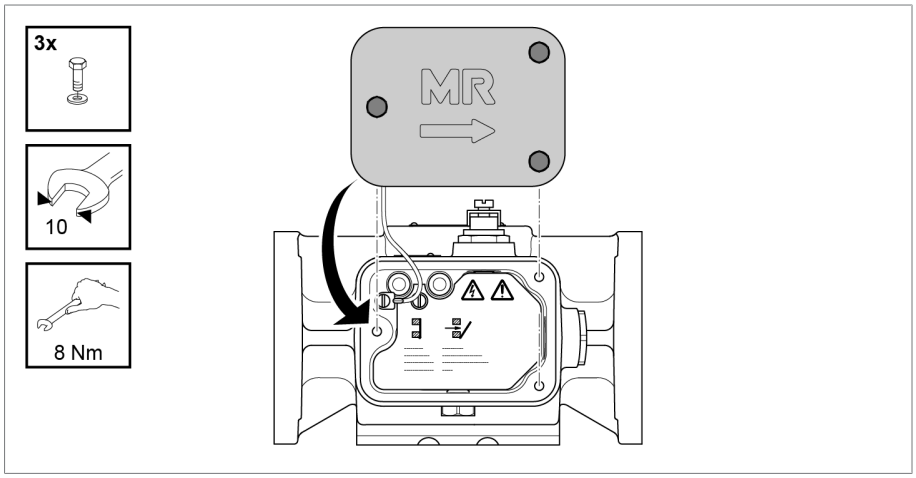

Figure 62: Terminal box cover

5.5.2.3 Installing protective relay in piping

Ensure the following for installation and proper function of the protective relay:

1. Ensure that there are no foreign bodies in the piping or in the oil conservator.
2. Install protective relay such that it can be easily accessed for subsequent maintenance work.
3. Install protective relay with good support and free from vibrations.
4. The test buttons must be at the top.
5. The interior diameter of the piping must be at least 25 mm.

6. The magnetic field strength (bushings, busbars etc.) must be < 20 kA/m. Higher field strengths have a negative effect on the function of the protective relay.
7. The piping from the protective relay to the oil conservator must be routed with an inclination of at least 2% (1.2°) to ensure the switching gases can escape freely.
8. The protective relay is intended for a horizontal operating position in close proximity to the on-load tap-changer head. A positive inclination of up to 5° from the horizontal is permitted in the direction toward the conservator. An inclination of up to 5° from the vertical to either side is permitted.

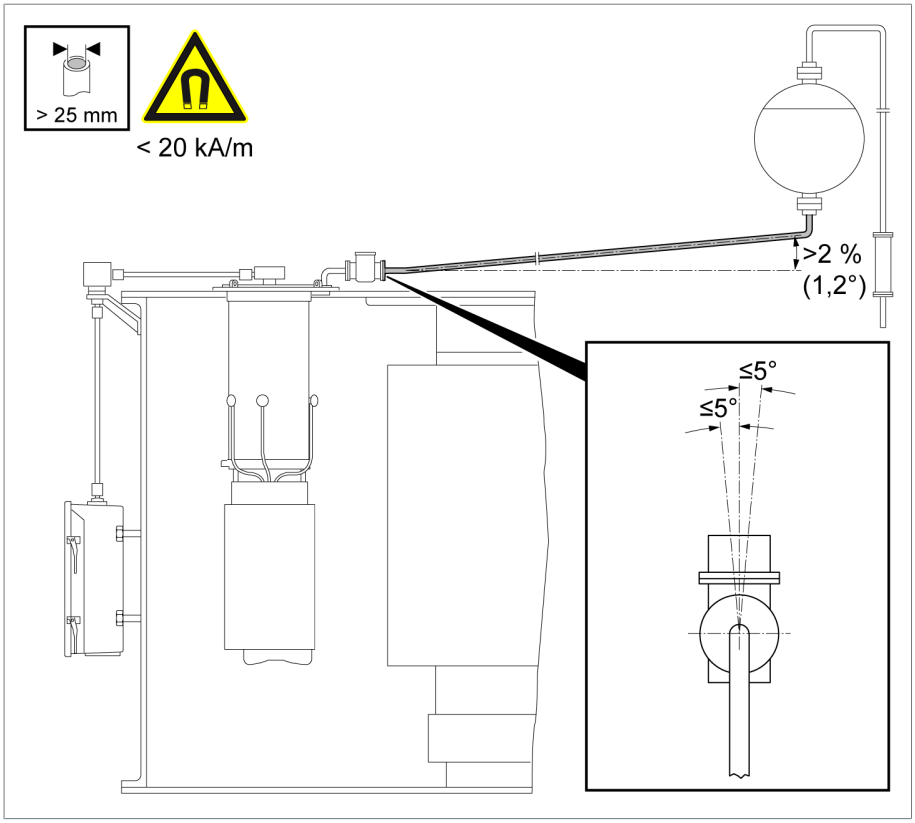

Figure 63: Protective relay installation

9. The reference arrow on the terminal box cover must point toward the on-load tap-changer's oil conservator.

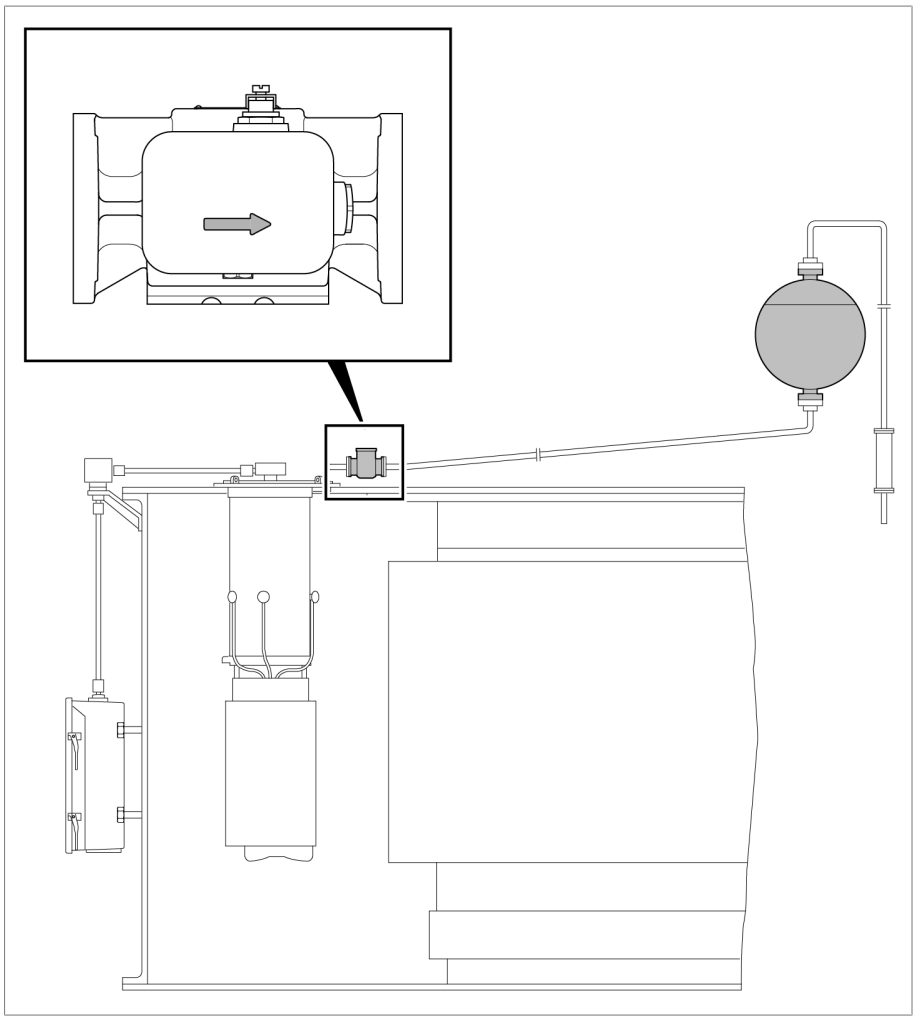

Figure 64: Reference arrow pointing towards the on-load tap-changer's oil conservator

10. Install a stop-cock with a nominal width of at least 25 mm between the protective relay and oil conservator.

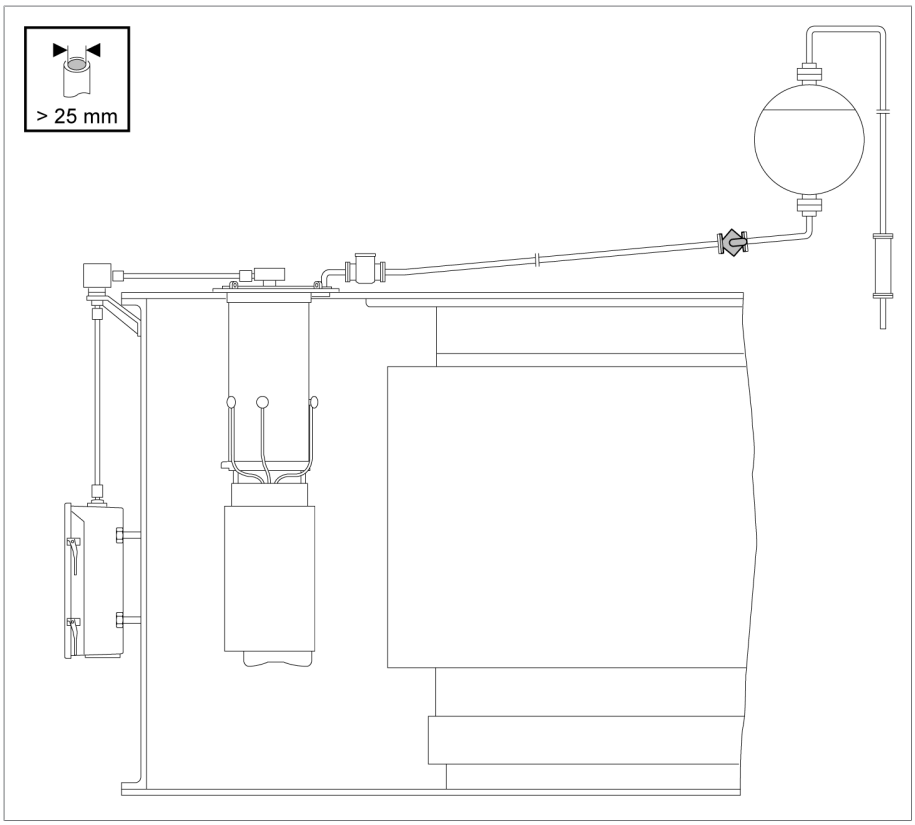

Figure 65: Stop-cock

5.5.2.4 Installing electrics for protective relay

The protective relay's dry-reed magnetic switch is supplied as either an NC or NO contact in the following variants:

- 2 x NC contact
- 2 x NO contact
- 1 x NC contact and 1x NO contact

⚠ WARNING

Risk of death or severe injury!

Risk of death or severe injury due to improper electrical connection of the protective relay.

► Loop the protective relay into the tripping circuit of the circuit breakers of the transformer to be protected so that the transformer is immediately de-energized by the circuit breakers when the protective relay is tripped.

► Systems which only generate an alarm message are not permitted.

When making the electrical connection for the protective relay, proceed as follows.

1. Connect protective conductor with cable cross-section of 1…4 mm^2 to cylinder head screw.
2. Take off MR dummy plug.

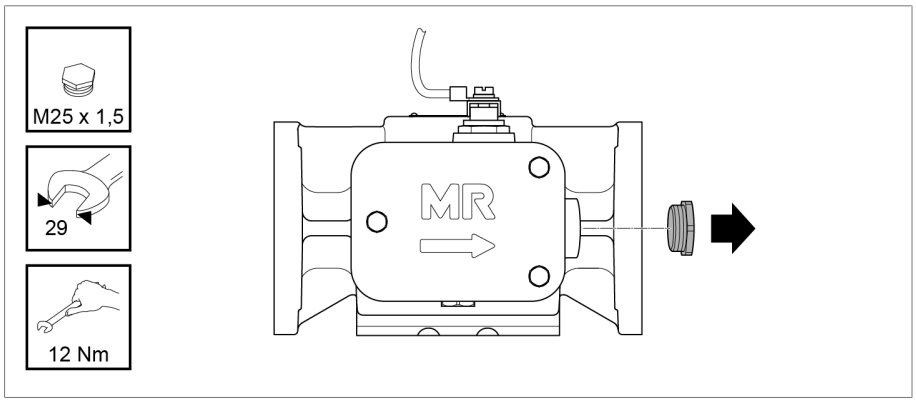

Figure 66: Dummy plug

3. Insert explosion-certified cable bushing into tapped hole on side of terminal box.
4. Loosen the three screws on the terminal box cover and lift off the terminal box cover.

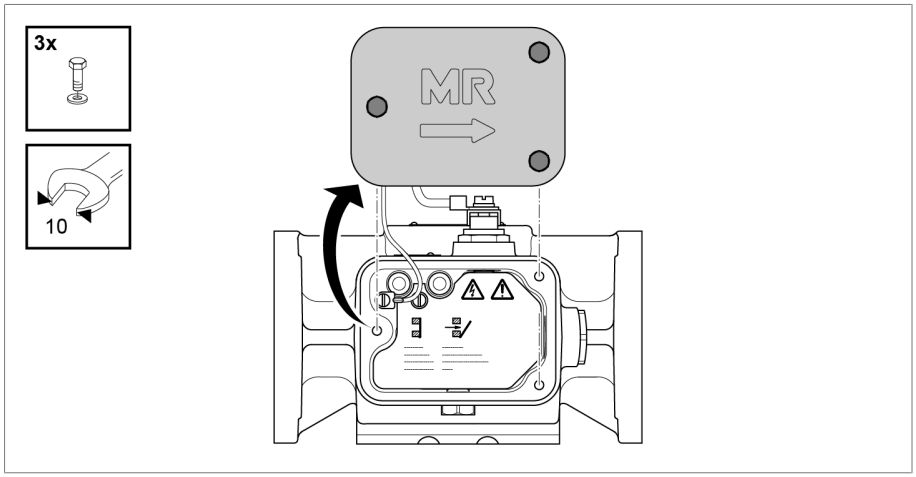

Figure 67: Terminal box cover

5. Take off the slotted head screw for potential tie-in and remove the terminal box cover with wire.

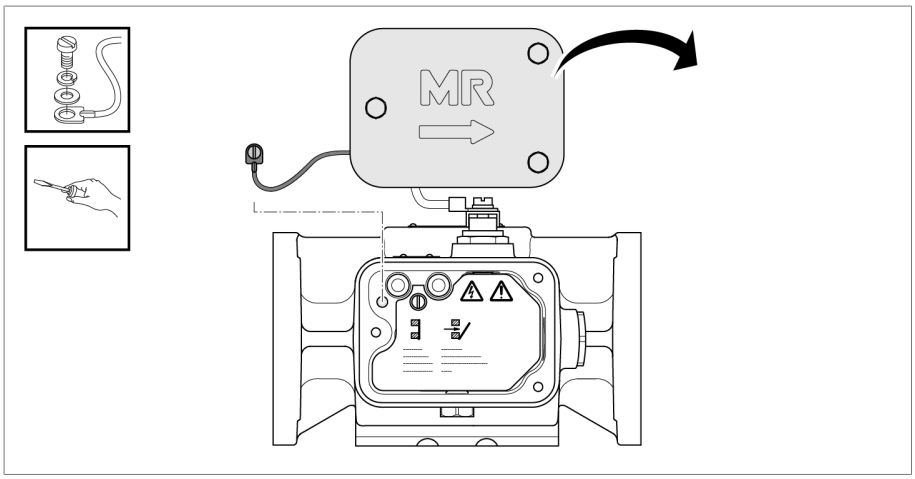

Figure 68: Terminal box cover

6. Remove screw for the protective cover and take off the protective cover.

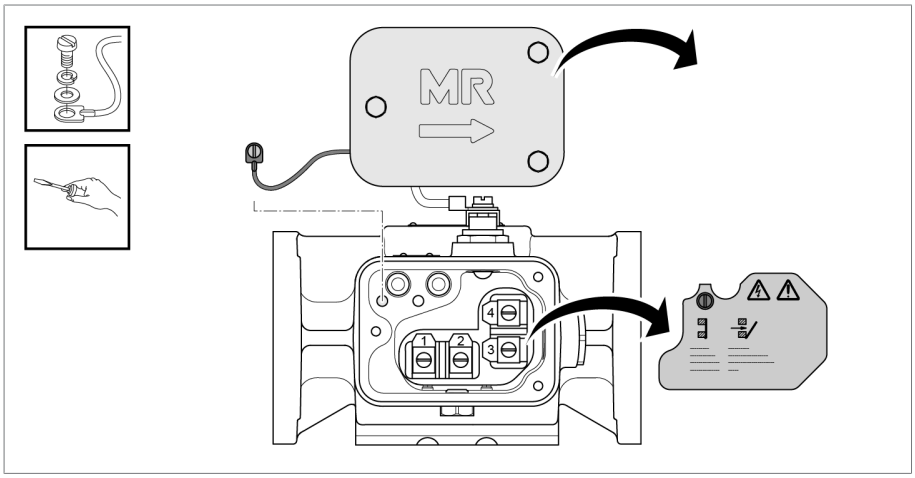

Figure 69: Terminal box cover and protective cover

7. Guide explosion-certified cable through cable bushing and into protective relay. Ensure that the cable gland is well connected and sealed.
8. Connect electric cables with cable cross-section of 1…4 mm^2 to connection terminals in accordance with connection diagram.
9. Insert the protective cover and secure using the screw.

10. Position the wire for the terminal box cover and affix using the slotted head screw.

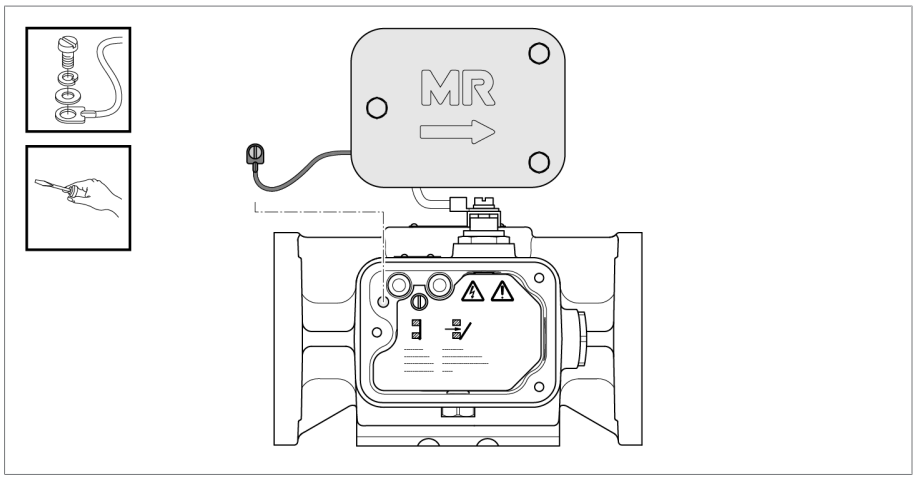

Figure 70: Terminal box cover

11. Attach the terminal box cover and secure with screws.

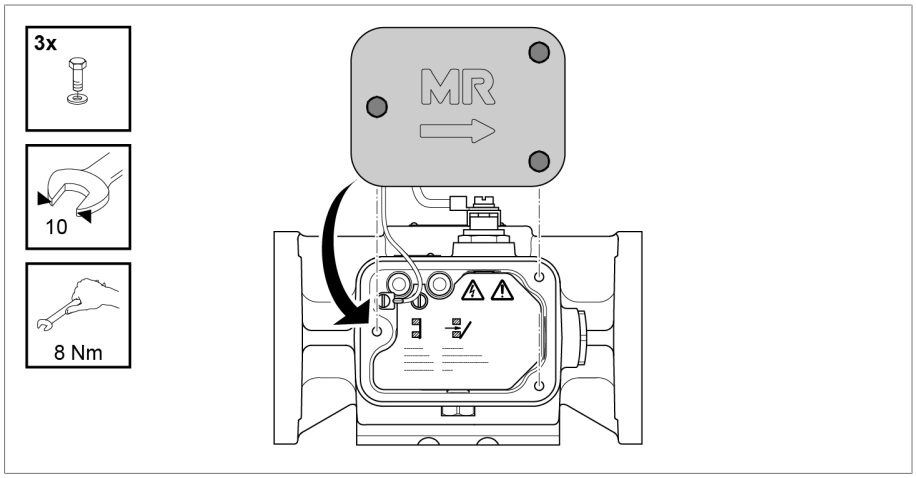

Figure 71: Terminal box cover

5.5.3 Fitting motor-drive unit

► Fit motor-drive unit to transformer as described in relevant MR operating instructions for motor-drive unit.

5.5.4 Fitting drive shaft

Observe the following during mounting:

NOTICE

Damage to drive and on-load tap-changer or de-energized tap-changer!

Trouble-free operation of the drive and the on-load tap-changer or de-energized tap-changer cannot be guaranteed.

► The shaft ends to be connected must be exactly aligned.

Permitted axial displacement

Minor axial displacement can be tolerated as long as it does not exceed 35 mm per 1,000 mm square tube length (that corresponds to 2°).

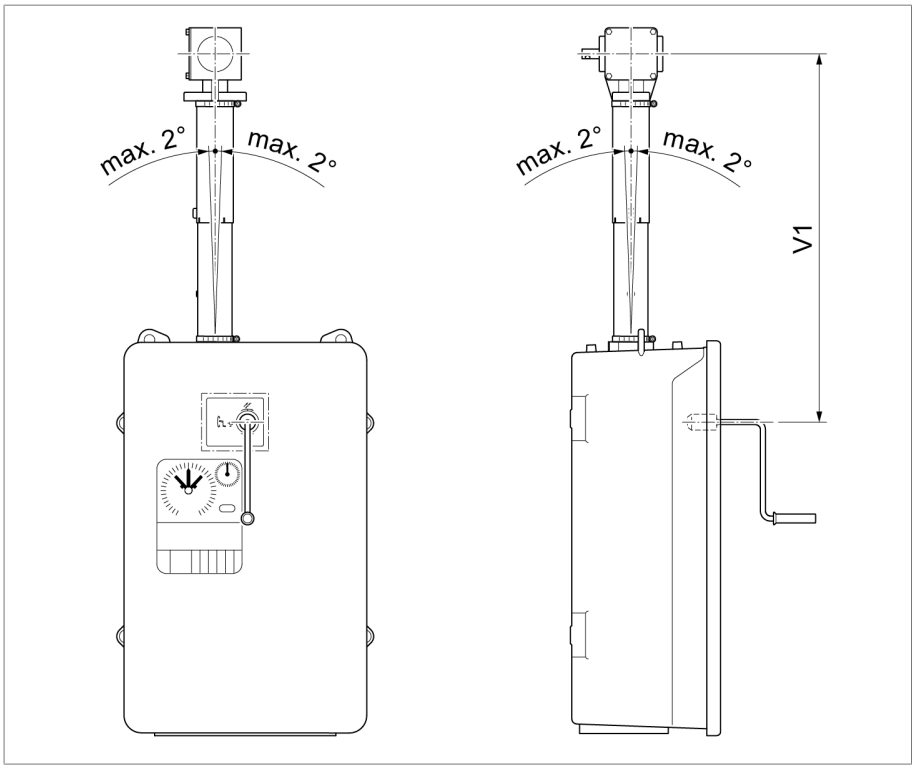

Figure 72: Permitted maximum axial displacement of vertical drive shaft

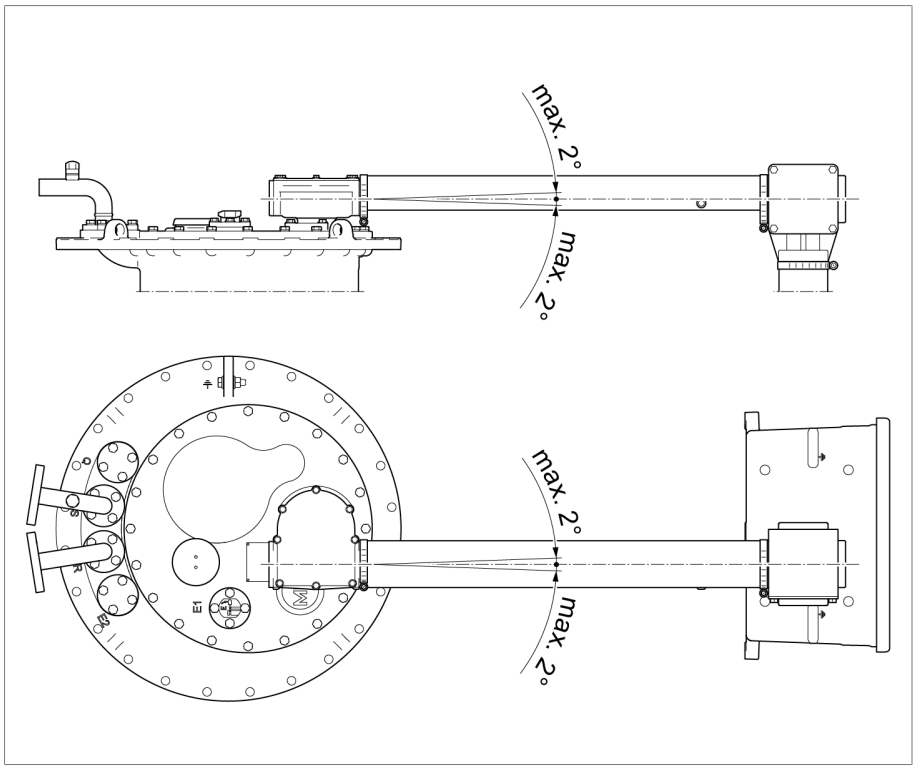

Figure 73: Permitted maximum axial displacement of horizontal drive shaft

Resistance to corrosion of components

Square tubes, coupling brackets, coupling bolts, screws, and locking washers are corrosion-resistant. We therefore recommend not applying the same external coating to these parts as to the transformer tank.

Cutting square tubes, telescopic protective tubes, and protective cover

The square tubes, telescopic protective tubes, and protective cover are supplied in overlengths (graded standard lengths). You must cut these parts to the required size before mounting on the transformer. In rare cases, you also have to cut the inner tube of the telescopic protective tube to the desired length. The maximum total drive shaft length of the drive - last column = 15 m.

Standard lengths	Ex TAPMOTION® ED
400	•
600	•
900	•
1,300	•
1,700	•

Table 13: Graded standard lengths of square tubes for explosion-proof motor-drive unit TAPMOTION® ED-Ex

5.5.4.1 Fitting vertical drive shaft with insulator

To fit the vertical drive shaft, proceed as follows.

1. **⚠ CAUTION!** Switch off motor protective switch Q1 in the motor-drive unit (position O). If this is not done, the motor-drive unit may be started inadvertently and cause injuries.
2. Screw down the bevel gear for fastening on the transformer on both sides with the contact washers provided to ensure permanent grounding. Screws are not included in the scope of supply.

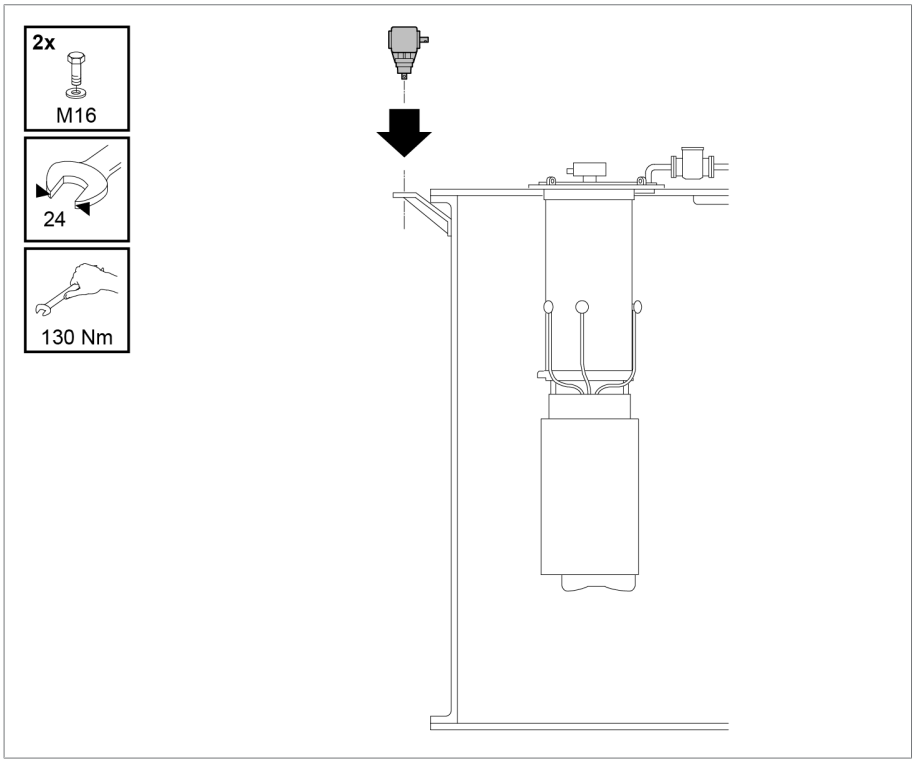

Figure 74: Bevel gear

3. Determine dimension A between shaft end of drive and shaft end of bevel gear. Shorten the square tube to length of A–179 mm, taking the insulator into account.

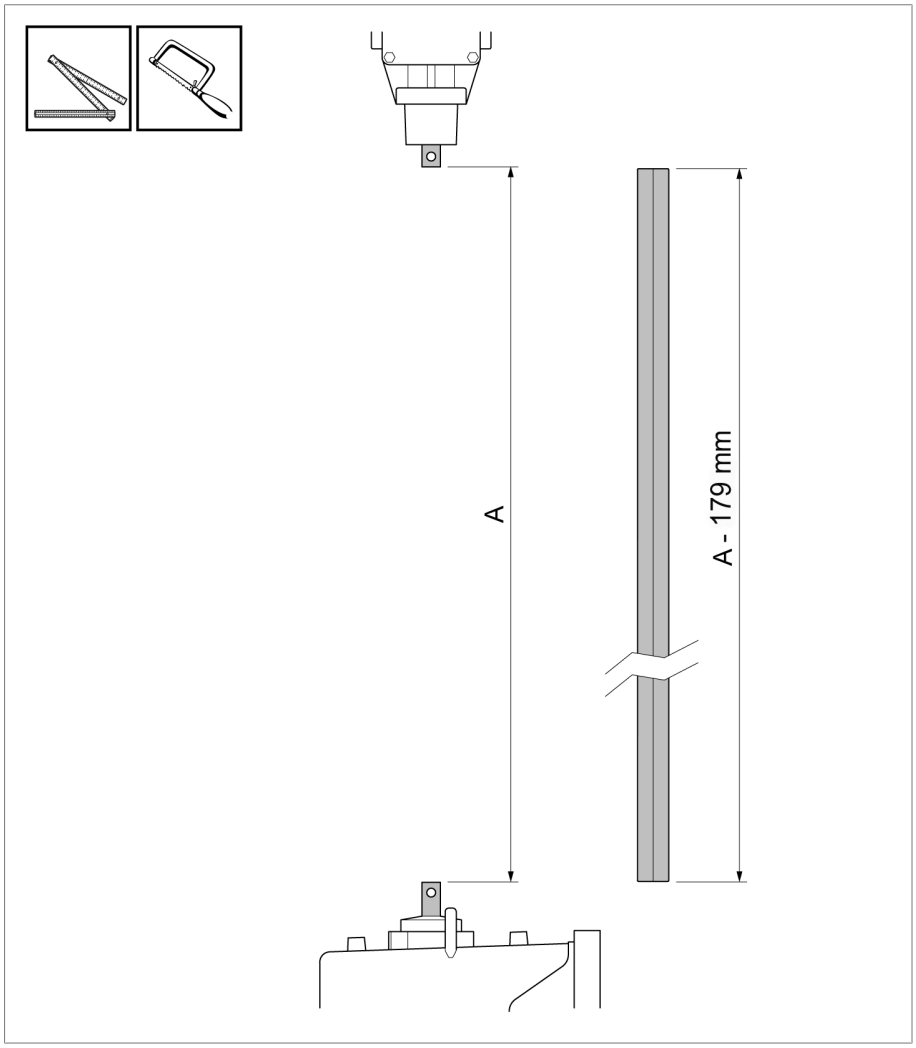

Figure 75: Shortening square tube

4. Deburr the cut surfaces on the square tube.

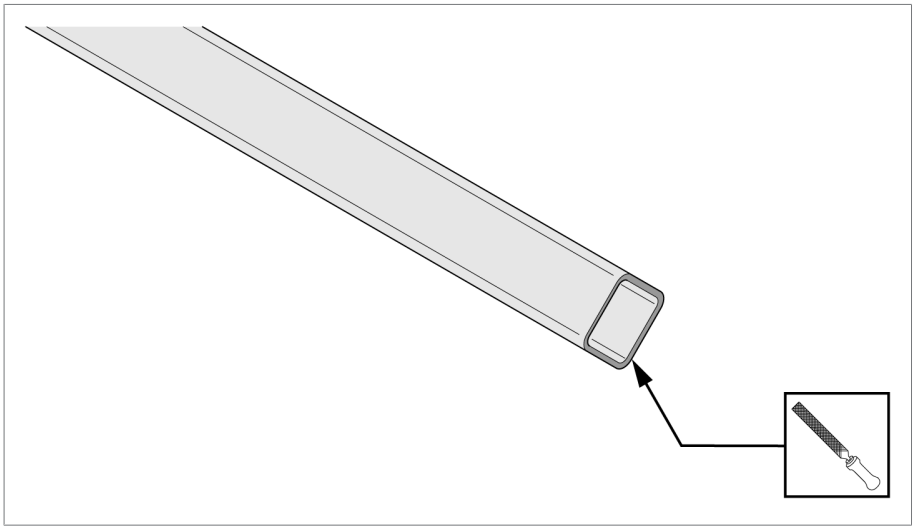

Figure 76: Deburring cut surfaces

5. Screw down the double coupling bracket with the insulator supplied and the square tube. Mount the insulator on the side facing the drive.

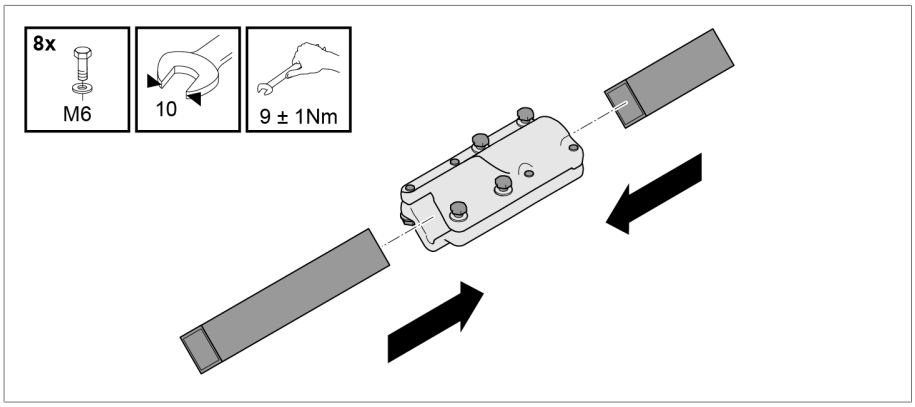

Figure 77: Screwing down the square tube and the insulator with double coupling part

6. Slide the loosely screwed-together coupling part onto the insulator until the stop is reached.

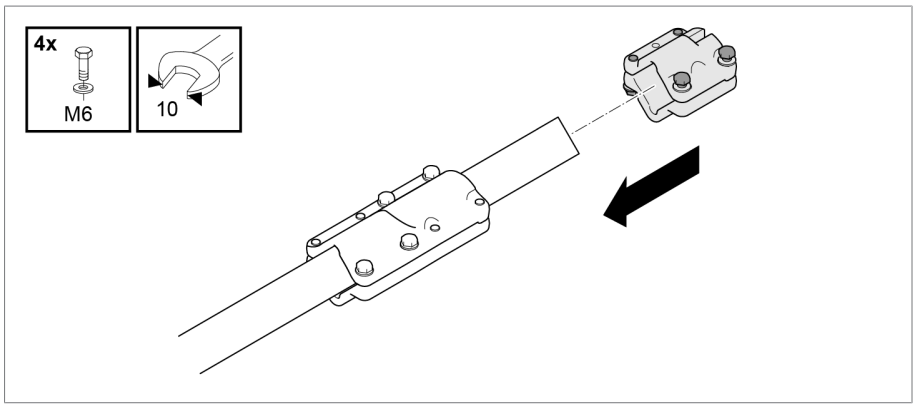

Figure 78: Sliding the coupling part onto the insulator

7. Insert the coupling bolt into the shaft end of the drive. Grease the coupling part, coupling bolt and shaft end (e.g. ISOFLEX TOPAS L32). Slide the square tube with the coupling part onto the shaft end.

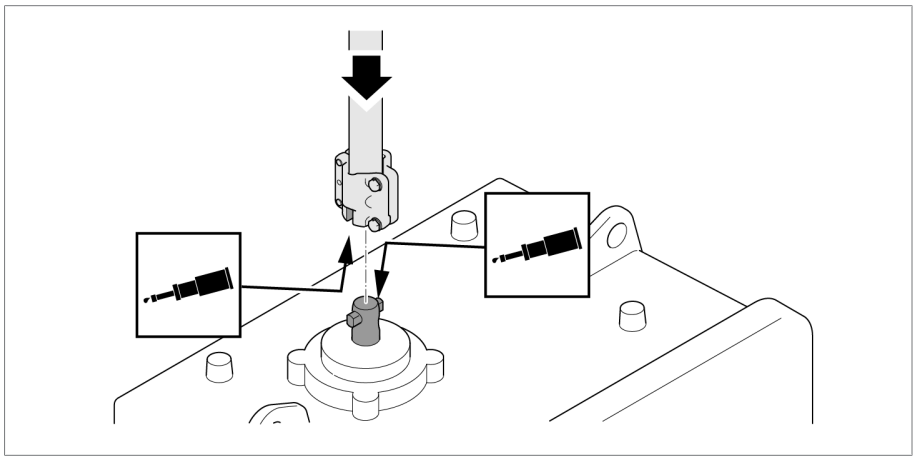

Figure 79: Sliding the square tube with the coupling part onto the shaft end

8. Attach the square tube to the drive.

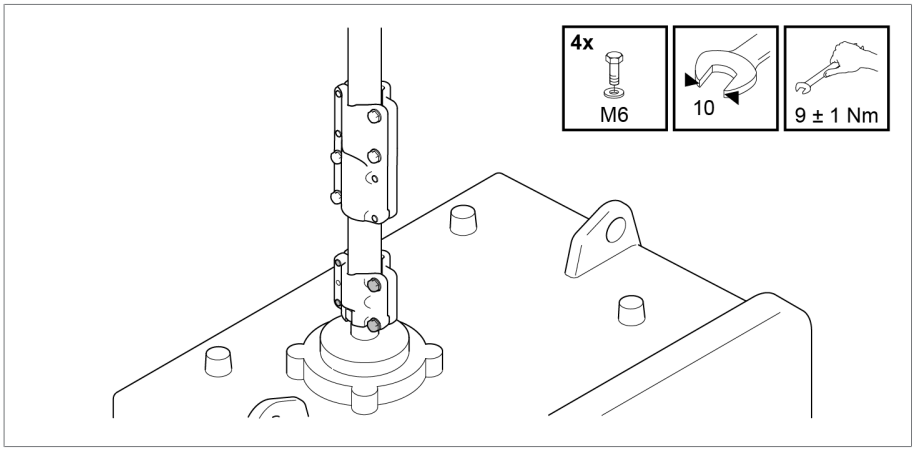

Figure 80: Attaching the square tube to the drive

9. Pivot the square tube away from the axis.

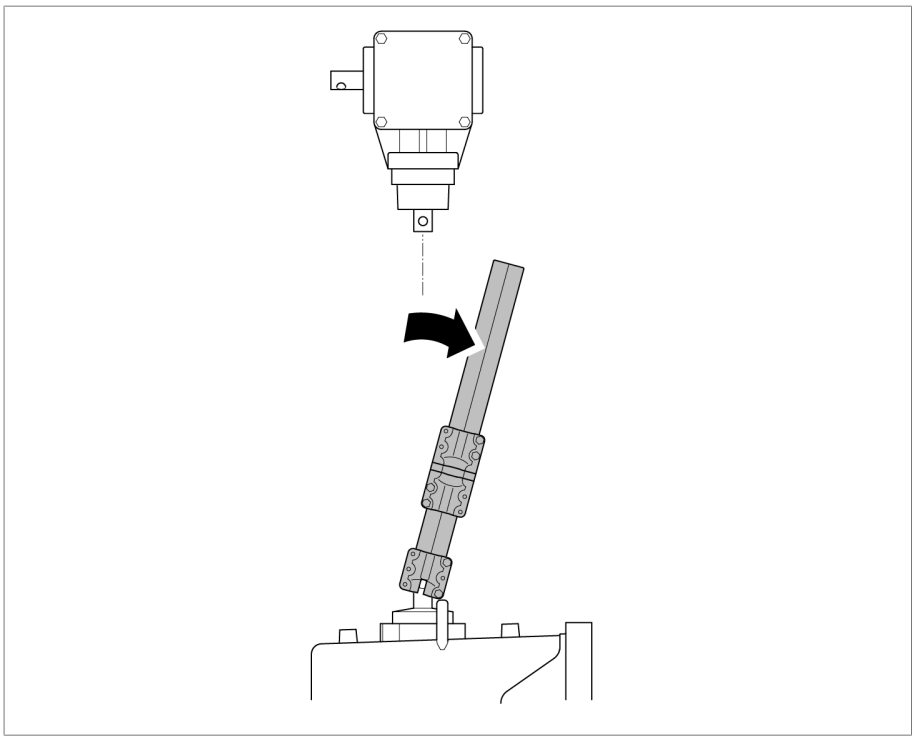

Figure 81: Pivoting the square tube away from the axis

10. When installing the telescopic protective tube, shorten the inner tube on the side without slots if necessary. The minimum dimension for overlapping the two protective tubes is 100 mm.

The inner tube must not be deformed and must be deburred in order to slide easily in the outer tube.

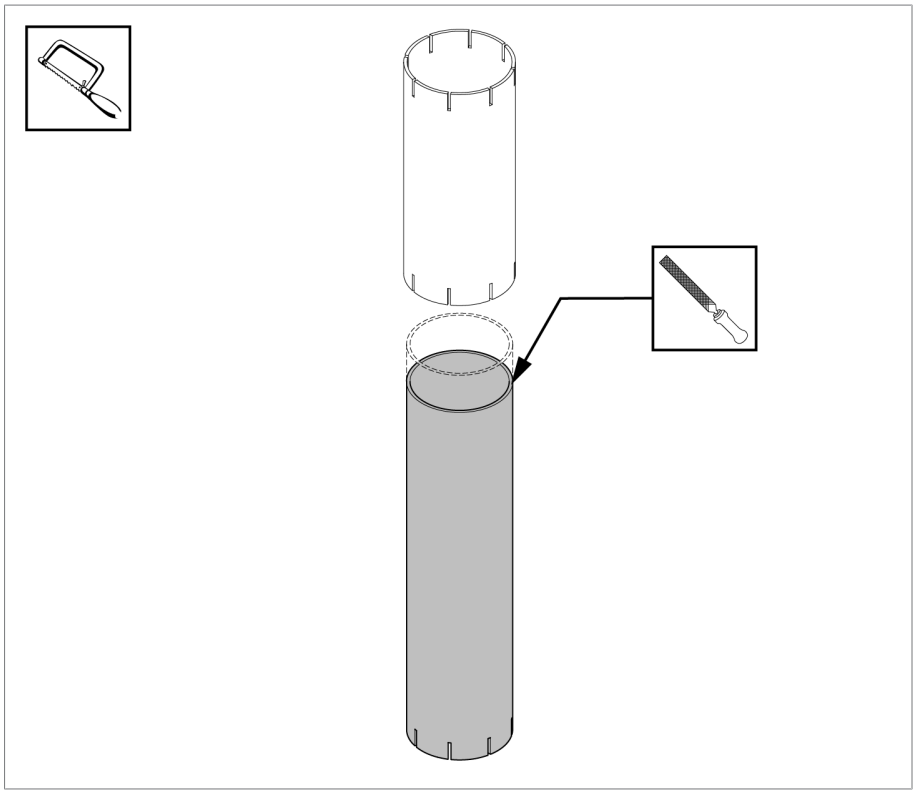

Figure 82: Deburring the inner tube

Dimension A (= distance between the shaft end of the drive and the shaft end of bevel gear)	Inner tube	Outer tube
170 mm...190 mm	Shorten to 200 mm	= 200 mm
191 mm...1130 mm	Dimension A + 20 mm	= 200 mm
1131 mm...1598 mm	= 700 mm	= 1150 mm
1,599 mm...2,009 mm	= 1150 mm	= 1,150 mm

11. For the separate grounding with 110 mm spacing (viewed from the slotted side), drill an 11 mm diameter hole in the inner tube.

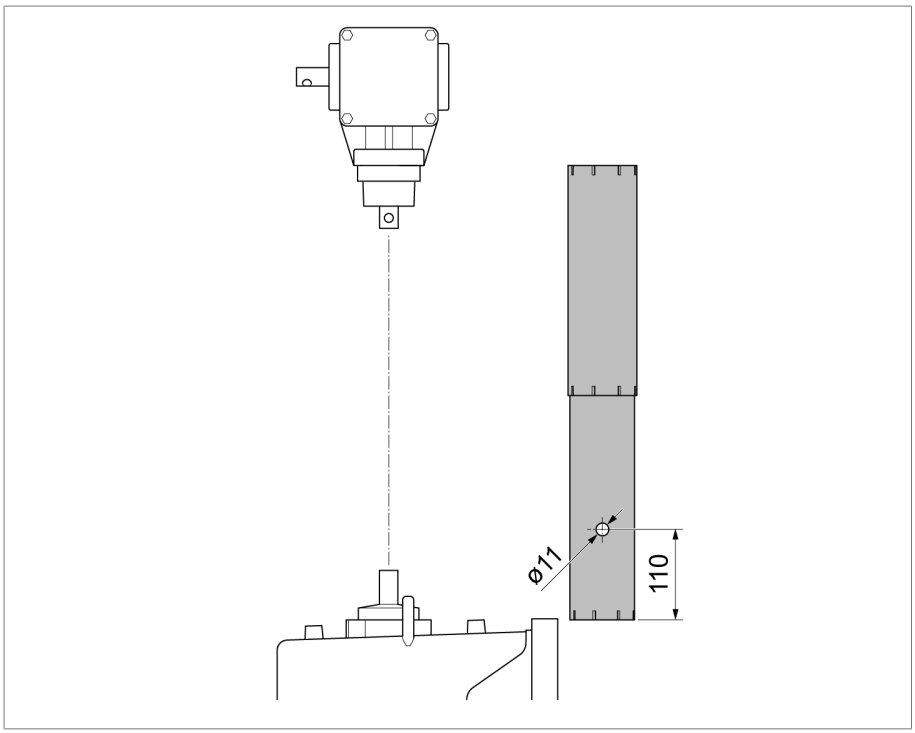

Figure 83: Producing grounding hole on the telescopic protective tube

12. Slide the outer tube over the inner tube. When doing so, make sure that the non-slotted side of the inner tube is facing upwards. Slide the telescopic protective tube onto the square tube. Then slide the hose clips over the telescopic protective tube.

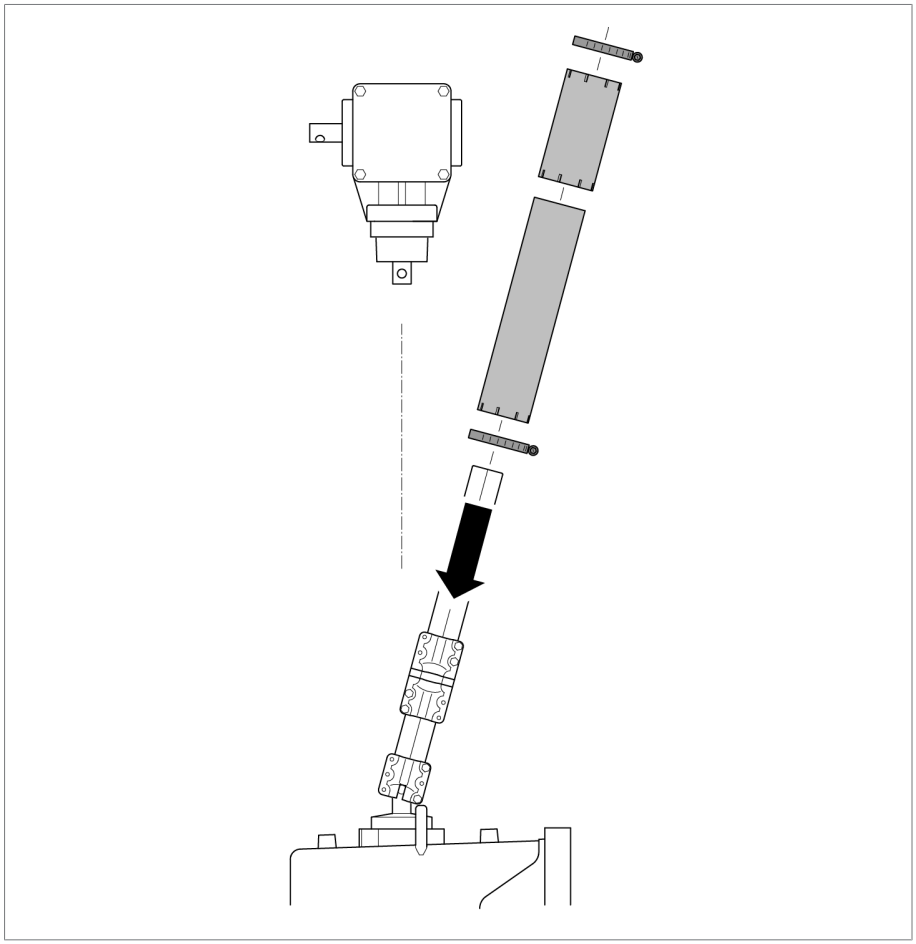

Figure 84: Sliding on the telescopic protective tube

13. Place the adapter ring over the bearing collar of the bevel gear and slide upwards. Insert the coupling bolt into the shaft end of the bevel gear. Pivot the square tube back to the axis.

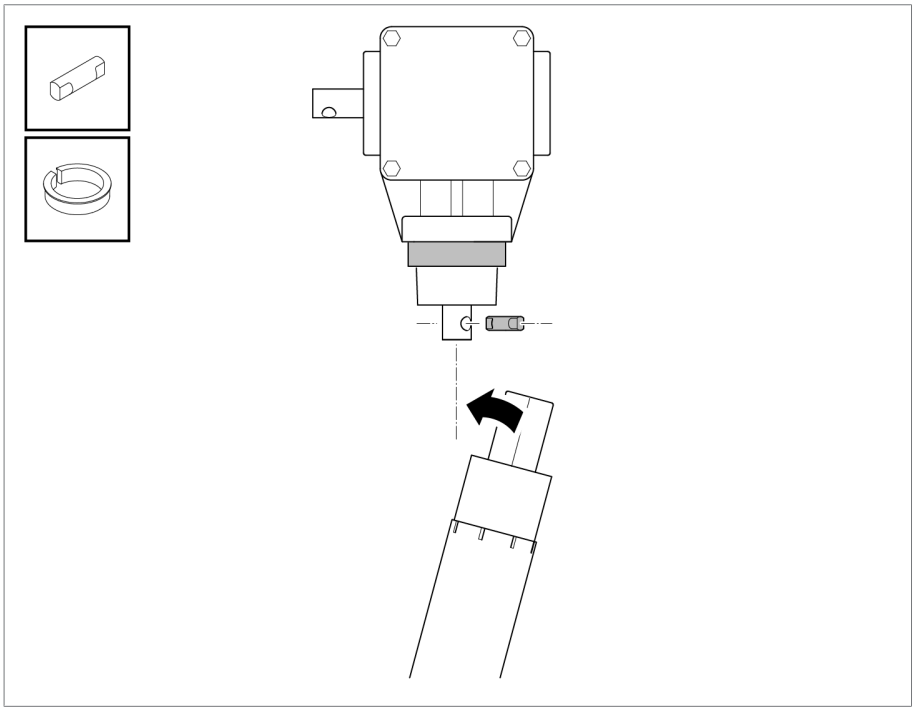

Figure 85: Fitting the adapter ring and the coupling bolt

14. Grease the coupling brackets, coupling bolt and shaft end (e.g. ISOFLEX TOPAS L32) and secure the square tube with the coupling brackets on the bevel gear. Set a unilateral axial clearance of 3 mm between the coupling bolt and the upper coupling piece.

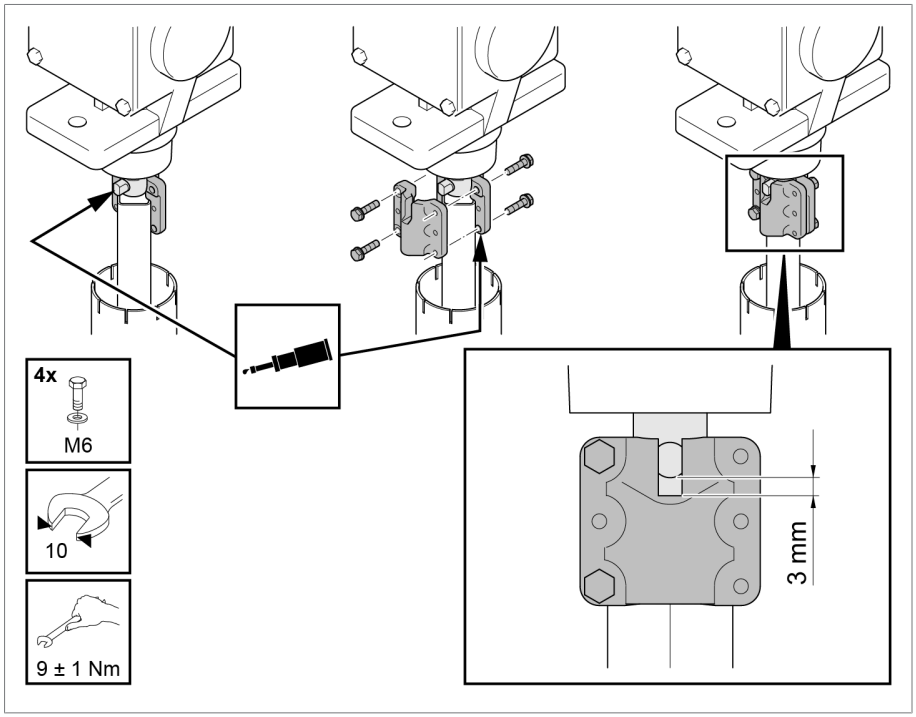

Figure 86: Mounting the coupling brackets

15. Use a grounding cable and the supplied screw with contact washers to establish a connection between the bottom protective tube (inner tube) and the functional ground. Due to the risk of collision with the screw head, fit the fixing screw for the grounding cable from the inside.

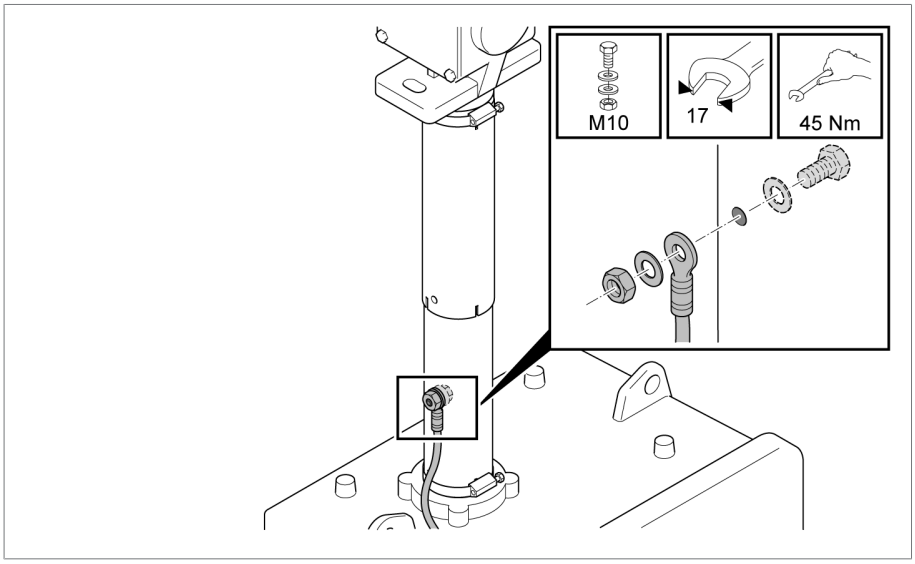

Figure 87: Screwing down the grounding cable on the telescopic protective tube

16. Attach the bottom protective tube (inner tube) with a hose clip to the bearing collar of drive **1**. Then slide the upper protective tube (outer tube) over the adapter on the bevel gear **2**. Secure the upper protective tube to the second hose clip at top end **3**.

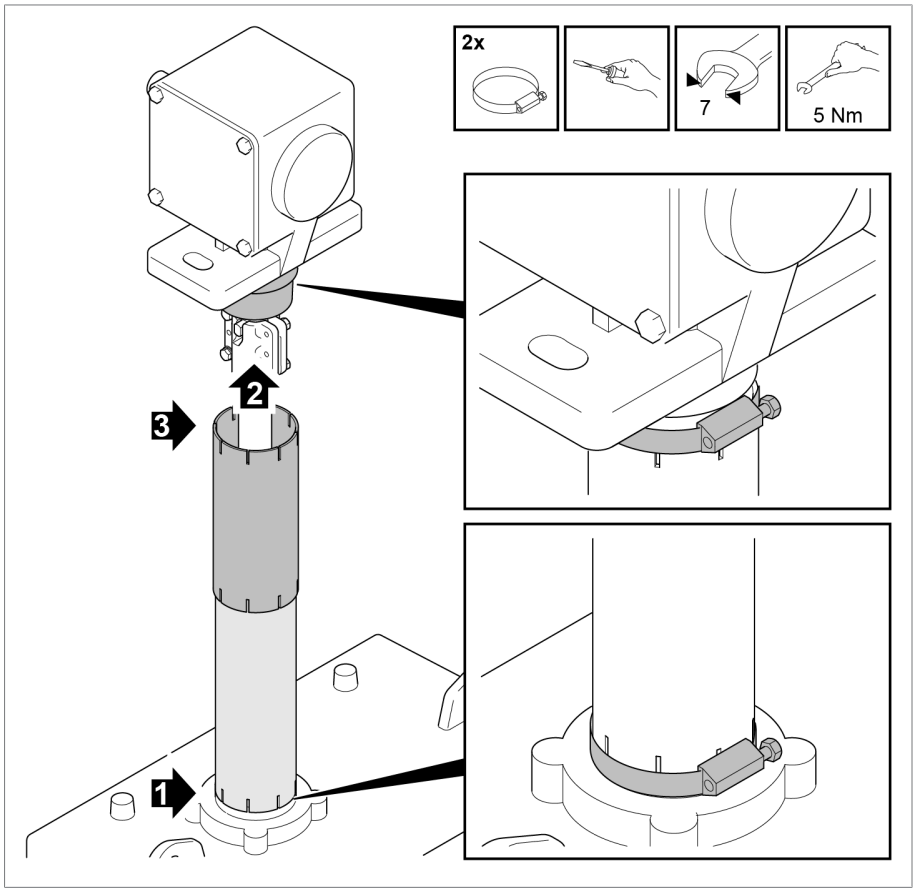

Figure 88: Mounting the protective tube

17. Drill two holes (4.5 mm in diameter) in the two tubes, roughly in the center and offset by 180°. Then, screw in the two tapping screws provided and lock the protective tubes against one another to produce a galvanic connection.

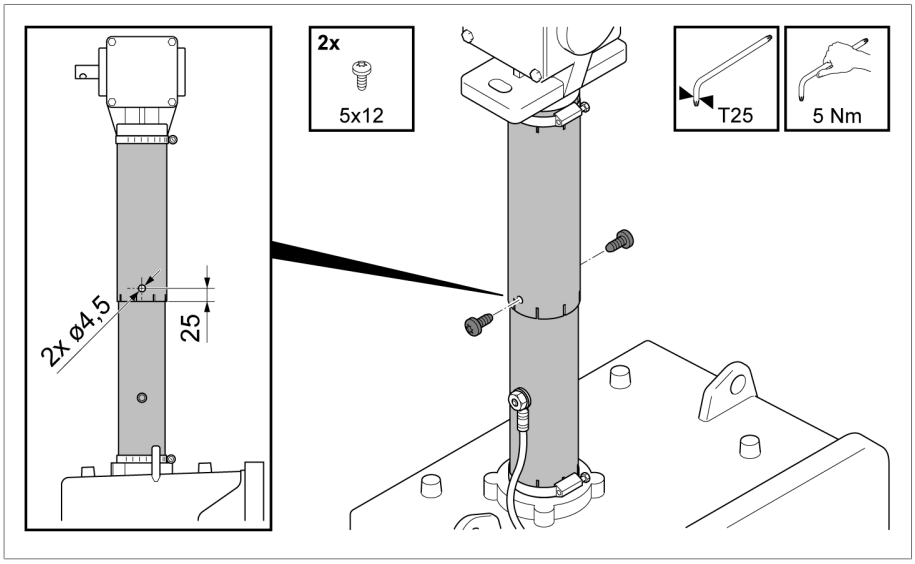

Figure 89: Screwing in the tapping screws

5.5.4.2 Fitting horizontal drive shaft with insulator

Aligning upper gear unit on the on-load tap-changer head

In order to correctly install the horizontal drive shaft, under certain circumstances you may have to first align the upper gear unit such that the horizontal drive shaft is flush with the shaft end of the upper gear unit.

To do so, proceed as follows:

1. **NOTICE!** Damage to the on-load tap-changer due to alignment of the gear unit when the oil compartment is not completely full.Ensure that the oil compartment is filled completely with insulating fluid.

2. Loosen screws and turn pressure ring segments to one side.

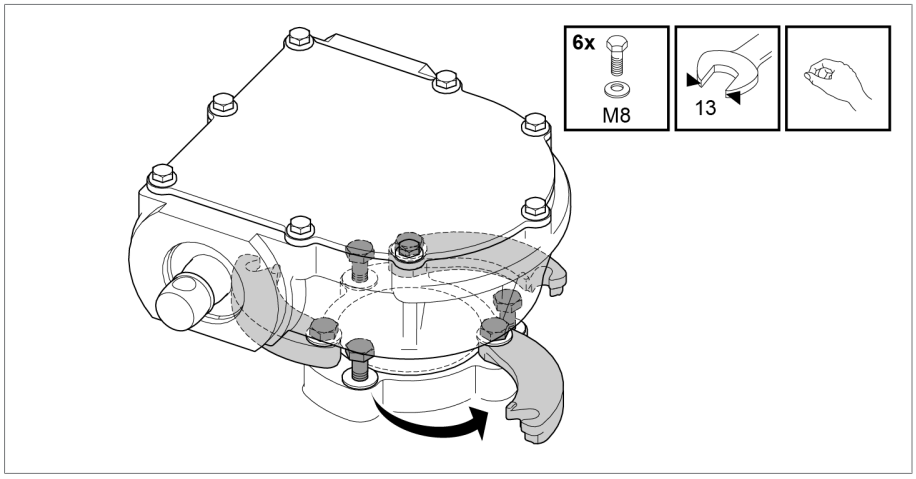

Figure 90: Pressure ring segments

3. **NOTICE!** Align gear unit such that the horizontal drive shaft is flush with the drive shaft of the gear unit. While aligning the gear unit, turn the unit's drive shaft such that its output shaft retains its original position. Failure to do so may result in damage to the de-energized tap-changer and transformer when starting up.

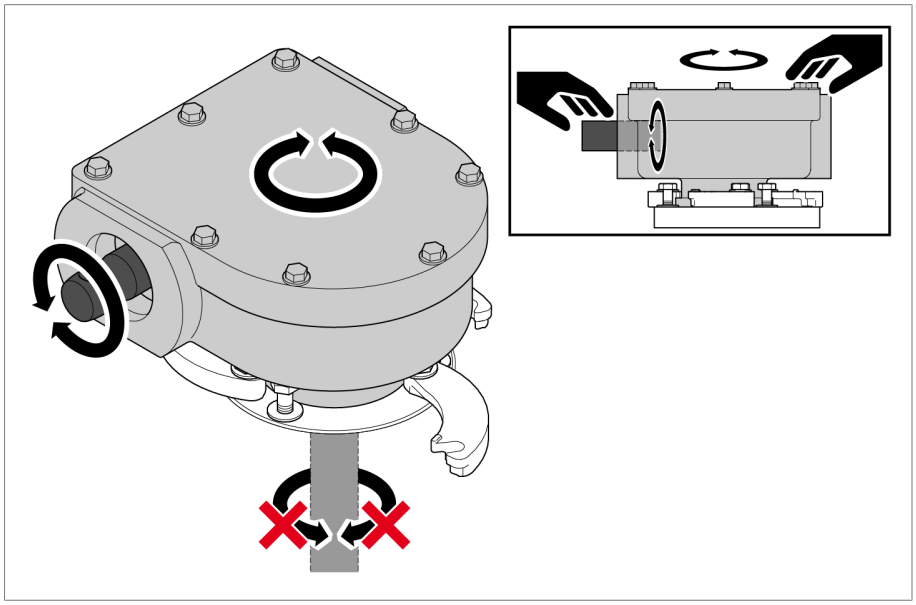

Figure 91: Aligning gear unit

4. Swivel pressure ring segments back towards gear unit and tighten screws. Ensure that the locking washer is between the screw head and pressure ring segment and that the pressure ring segments are firmly in contact with the gear unit housing.

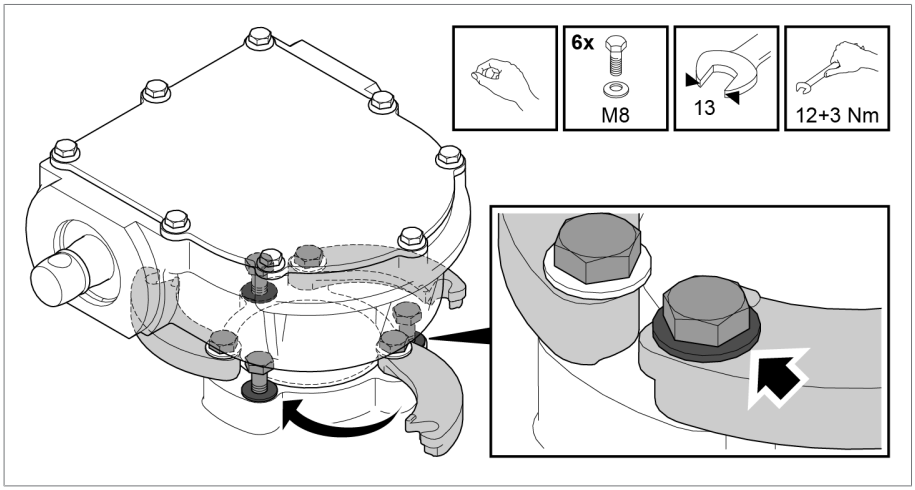

Figure 92: Securing pressure ring segments

Fitting the horizontal drive shaft

To mount the horizontal drive shaft, proceed as follows:

1. Calculate dimension A between the shaft end of the upper gear unit and the shaft end of the bevel gear and shorten the square tube to length A–179 mm taking the insulator into account.

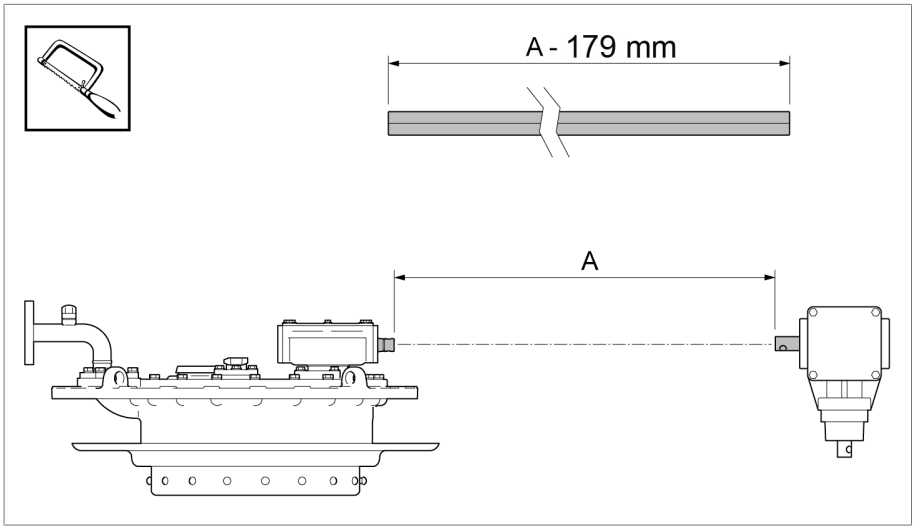

Figure 93: Shortening the square tube

2. Calculate inside width B between the housings of the upper gear unit and the bevel gear. Cut down the protective cover to B-2 mm and deburr the cut edges.

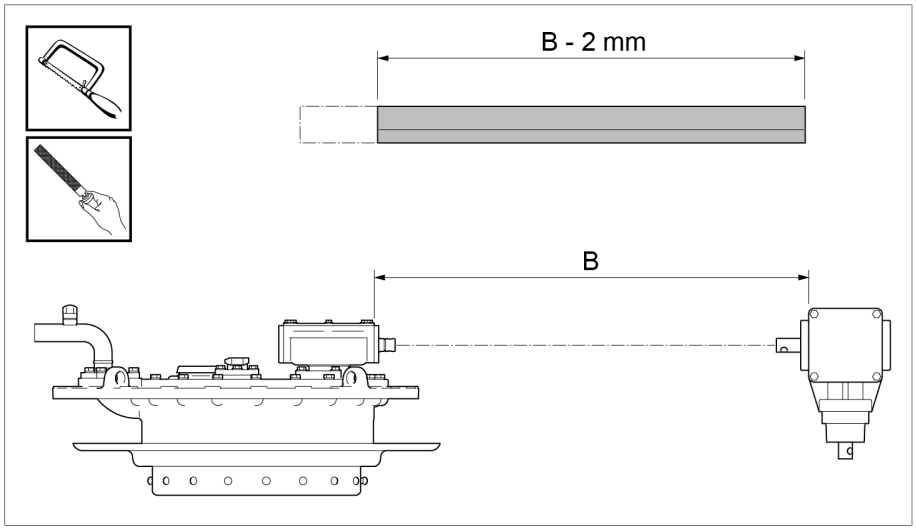

Figure 94: Shortening and deburring the protective cover

3. For the separate grounding with 110 mm spacing from the bevel gear, drill an 11 mm diameter hole in the protective cover. Protect the protective cover against corrosion with a coat of paint.

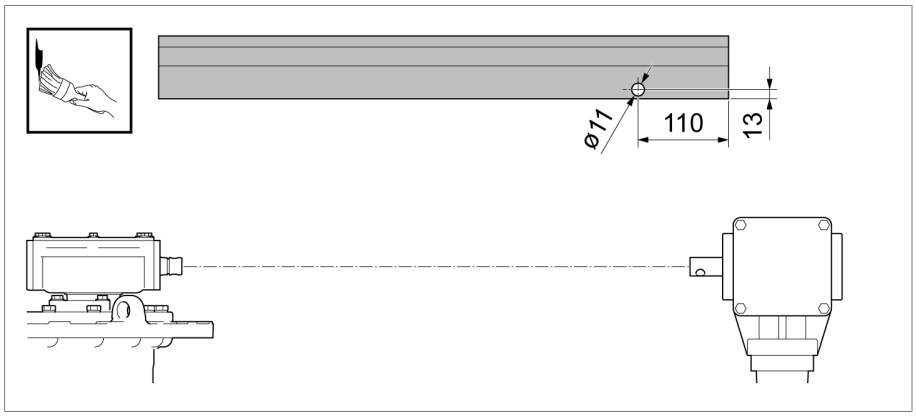

Figure 95: Producing the grounding hole on the protective cover

4. Screw down the double coupling bracket with the insulator supplied and the square tube. Mount the insulator on the side facing the bevel gear.

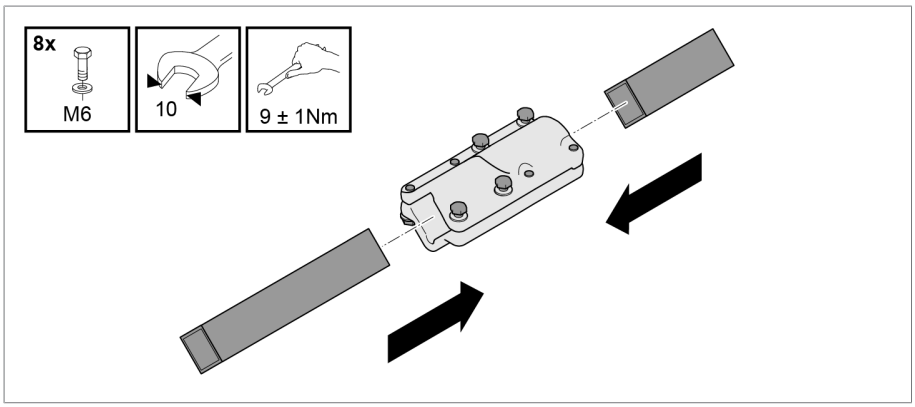

Figure 96: Screwing down the square tube and the insulator with double coupling part

5. Slide the loosely screwed-together coupling part onto the insulator until the stop is reached.

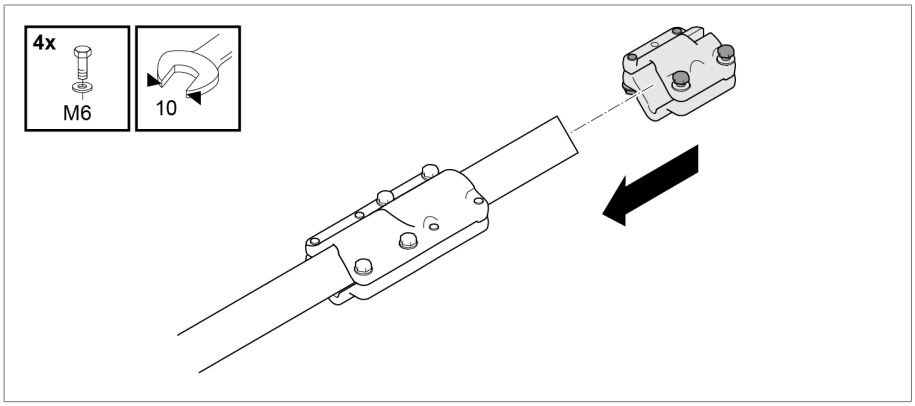

Figure 97: Coupling parts

6. Grease the coupling bolt, coupling part and shaft end of the bevel gear (e.g. ISOFLEX TOPAS L32) and insert the coupling bolt into shaft end. Thread the hose clip onto the square tube and slide the square tube with the coupling part onto the shaft end.

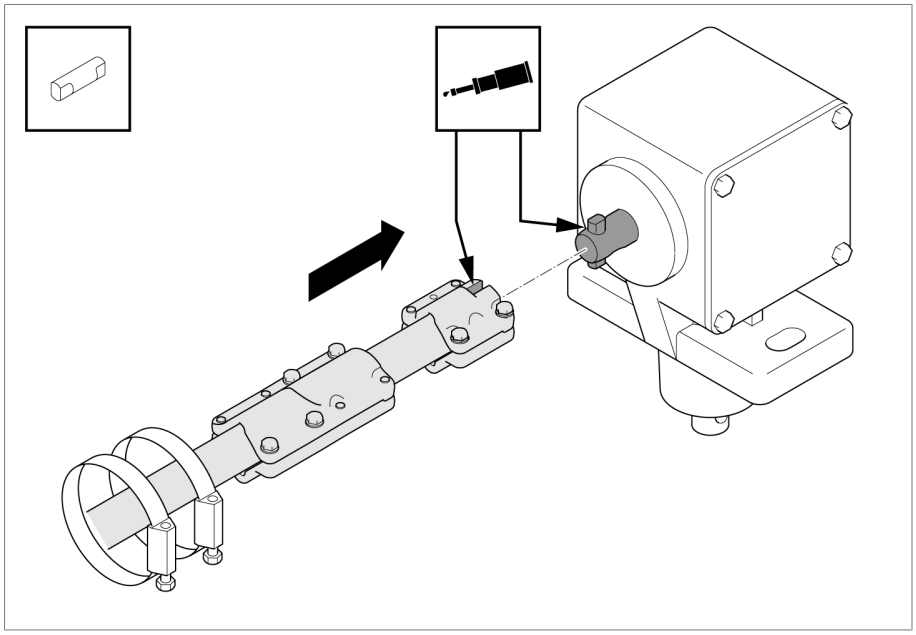

Figure 98: Sliding the square tube with the coupling part onto the shaft end

7. Secure the square tube onto the bevel gear.

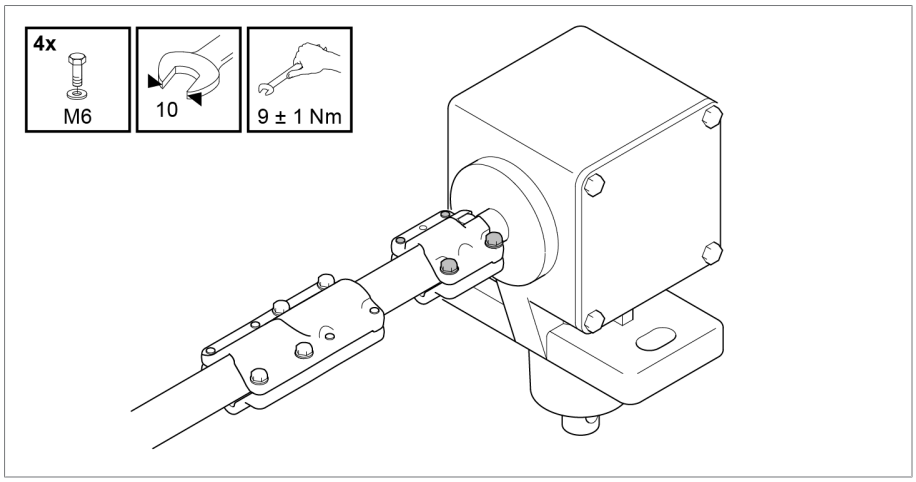

Figure 99: Securing the square tube on the bevel gear

8. Grease the coupling bolt, the coupling brackets and the shaft end of the upper gear unit (e.g. ISOFLEX TOPAS L32) and insert the coupling bolt into the shaft end. Secure the square tube with the coupling brackets on the upper gear unit. Set a unilateral axial clearance of 3 mm between the coupling bolt and the upper coupling piece.

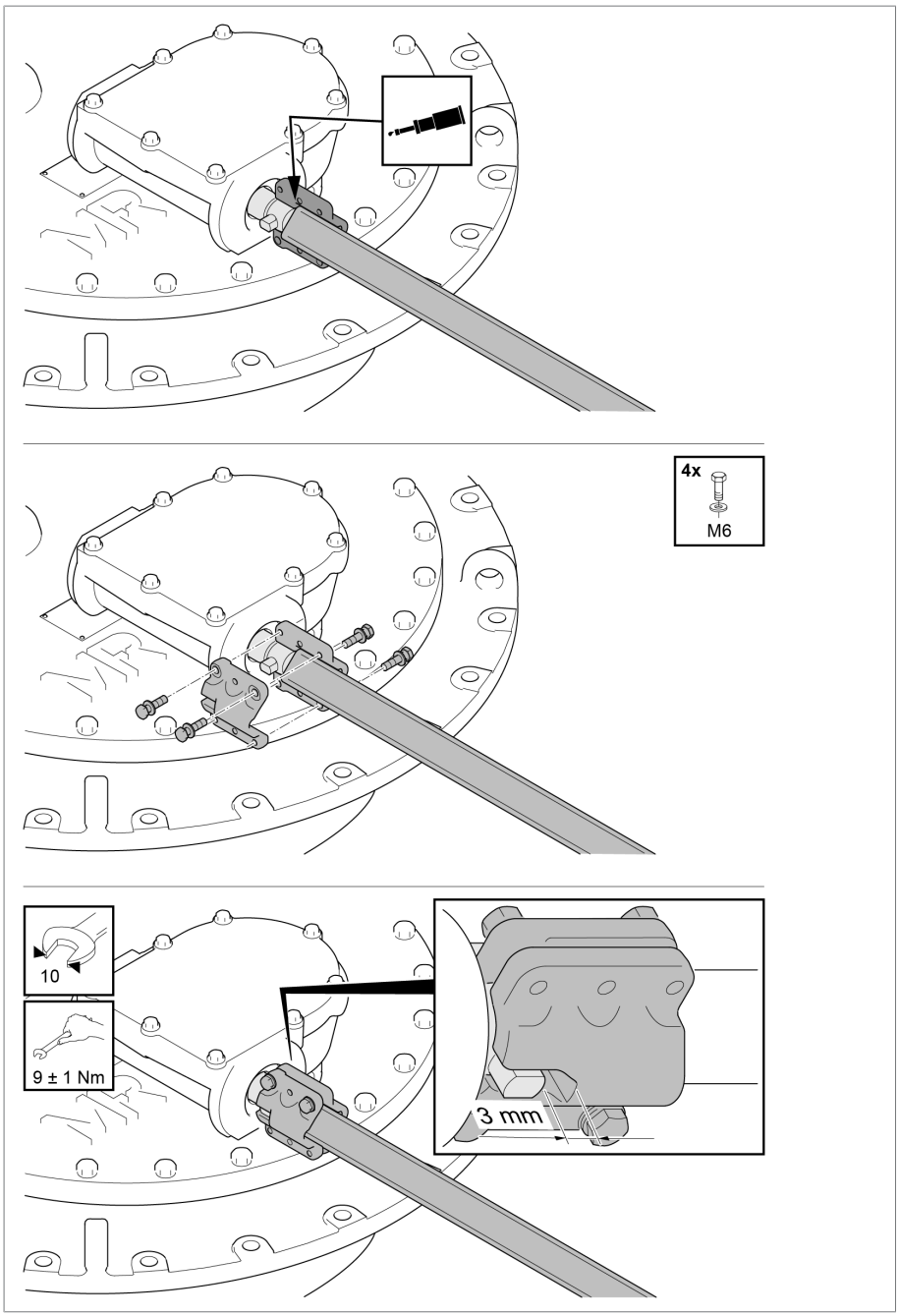

Figure 100: Secure the square tube on the upper gear unit.

9. Attach the shortened protective cover to the housing lugs on the on-load tap-changer head and the bevel gear. Secure each end of the protective cover with a hose clip.

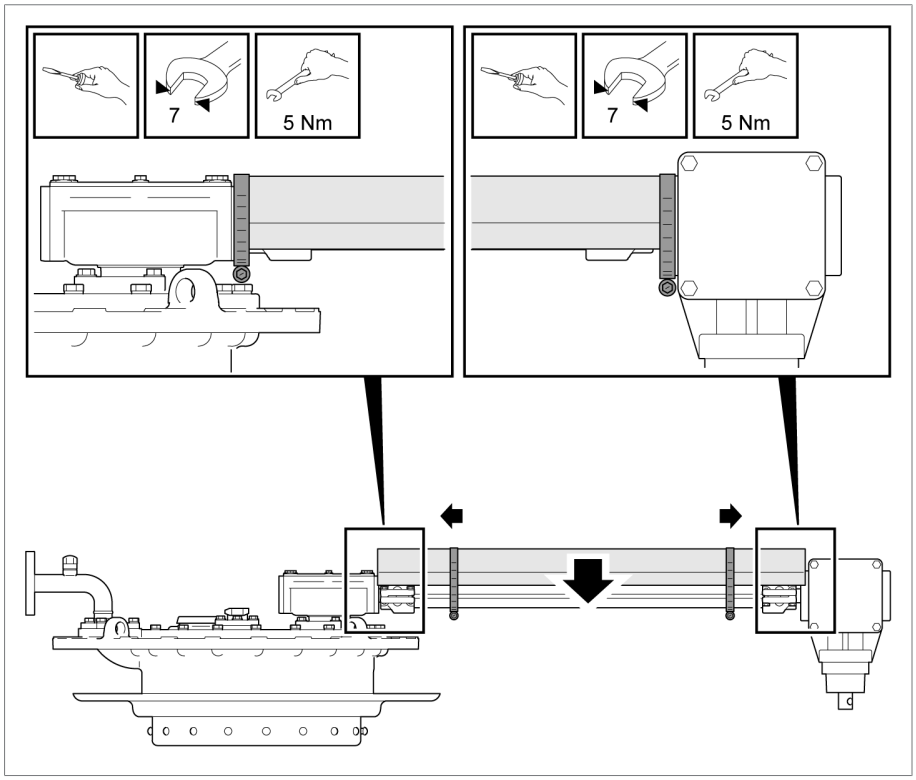

Figure 101: Fitting the protective cover

10. Use the grounding cable and the supplied screw with the contact washers to establish a connection between the protective cover and the functional ground. Due to the risk of collision with the screw head, fit the fixing screw for the grounding cable from the inside.

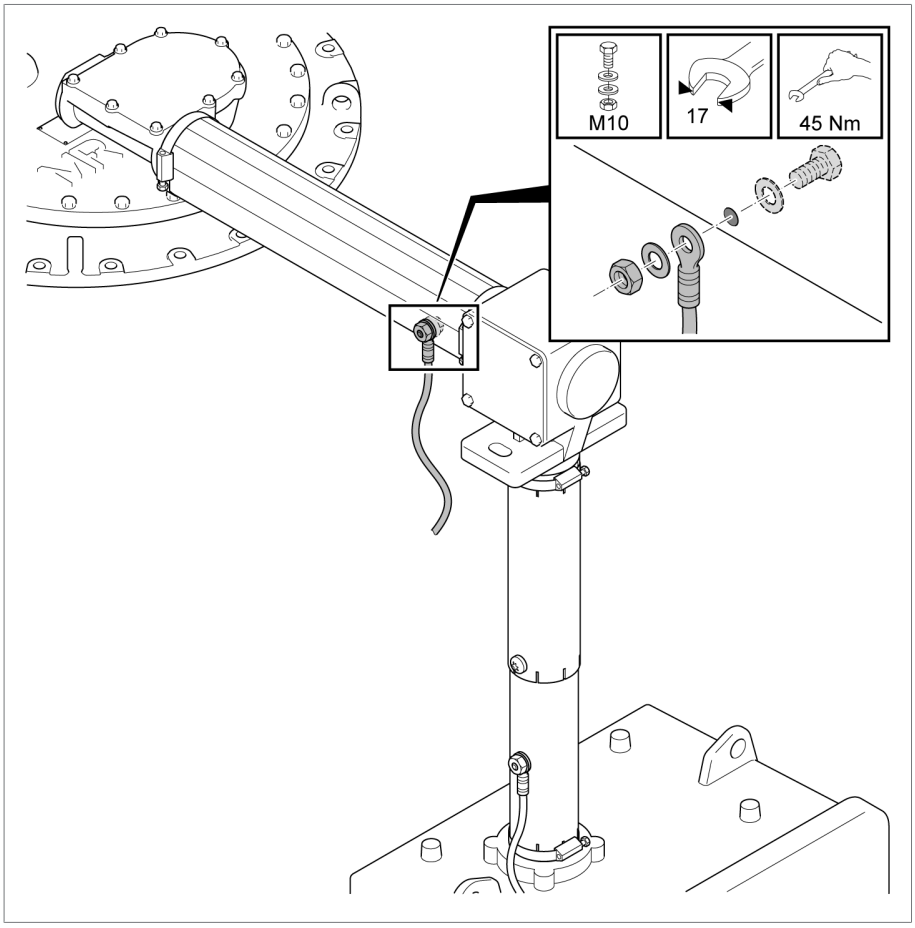

Figure 102: Screwing down the grounding cable of the protective cover

5.5.4.2.1 On-load tap-changer sets and combinations

For two-column and three-column on-load tap-changer models, the individual on-load tap-changer columns are driven by a common motor-drive unit. You must couple the on-load tap-changer heads above the transformer cover together and ensure synchronous switching of the on-load tap-changer columns.

Proceed as follows:

1. Check that the operating positions of all on-load tap-changers are identical (inspection window in the on-load tap-changer head). Each on-load tap-changer must be in the adjustment position.
2. Turn the pressure segments of upper gear units to one side by loosening the 6 M8 bolts / wrench size 13.

3. **NOTICE!** Move upper gear units into the required installation position only by turning the drive shafts of the upper gear units with loosened pressure segments. Otherwise, the on-load tap-changer may be damaged when aligning the upper gear unit.
4. Swivel pressure segments back towards gear unit and tighten screws (tightening torque 15 Nm). Ensure that the spring washer is between the screw head and pressure ring segment and that the pressure ring segments are firmly in contact with the gear unit housing.
5. Note arrow on drive shaft flange under the stamped serial number. The direction of the arrow indicates the direction of rotation when turning the hand crank of the motor-drive unit clockwise and must be identical for all gear units.
6. Move each on-load tap-changer separately one step by rotating the shaft ends counter-clockwise until the on-load tap-changer operates.
7. Check that the operating positions of all on-load tap-changer heads are the same.
8. Fit horizontal drive shaft between the on-load tap-changer heads. Individually couple each on-load tap-changer. Start with the on-load tap-changer which is closest to the motor-drive unit.
9. **NOTICE!** After installing all drive shafts, continue cranking another 2.5 revolutions counter-clockwise on the drive shaft of the upper gear unit to correctly complete the tap-change operation. An incomplete tap-change operation may damage the on-load tap-changer.
10. Switch on-load tap-changer back into adjustment position by turning drive shaft clockwise. Once the adjustment position has been reached and the diverter switch has undergone the tap-change operation, continue cranking the drive shaft of the upper gear unit by another 2.5 revolutions clockwise to correctly complete the tap-change operation.
11. Check operation of all on-load tap-changers. A slight time delay is permitted.
12. Check that the operating positions of all on-load tap-changer heads are the same.
13. Fit vertical drive shaft.

5.5.5 Centering on-load tap-changer and motor-drive unit

► Center on-load tap-changer and motor-drive unit as described in relevant MR operating instructions for motor-drive unit.

5.5.6 Making the electrical connections for the motor-drive unit

► Make electrical connections for the motor-drive unit as described in relevant MR operating instructions for the motor-drive unit.

6 Commissioning

⚠ WARNING

Danger of explosion!

Explosive gases in the oil compartment of the on-load tap-changer, transformer, pipework system, oil conservator and at the dehydrating breather opening can deflagrate or explode and result in severe injury or death!

- ► Ensure that there are no ignition sources such as naked flame, hot surfaces or sparks (e.g. caused by the build-up of static charge) in the transformer's immediate surroundings during commissioning and that none occur.
- ► Do not operate any electrical devices (e.g. risk of sparks from impact wrench).
- ► Only use conductive and grounded hoses, pipes, and pump equipment that are approved for flammable liquids.

⚠ WARNING

Danger of explosion!

Overloading the on-load tap-changer can lead to explosion. Spraying hot insulating fluid and flying parts can lead to death and serious injuries. Property damage is highly probable.

- ► Ensure that the on-load tap-changer is not overloaded.
- ► Ensure use of the on-load tap-changer in accordance with section "Appropriate use".
- ► Prevent operations outside of the permitted operating conditions by taking suitable measures.

6.1 Commissioning the on-load tap-changer at the transformer manufacturer's site

Perform the following work and functional checks before commissioning the transformer.

6.1.1 Bleeding on-load tap-changer head and suction pipe

6.1.1.1 Bleeding on-load tap-changer head

1. Open all forward and return valves in the pipe system.

2. Remove screw cap on air-vent valve E1 on the on-load tap-changer head cover.

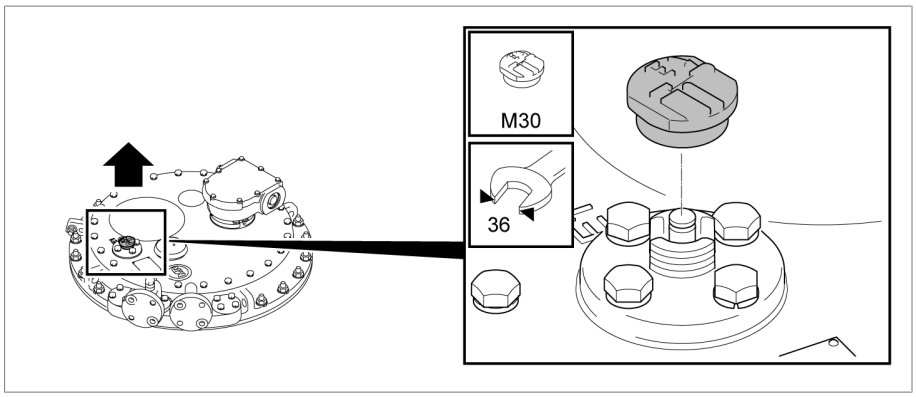

Figure 103: Air-vent valve E1

3. Use screwdriver to lift valve tappet on air-vent valve E1 and bleed on-load tap-changer head.

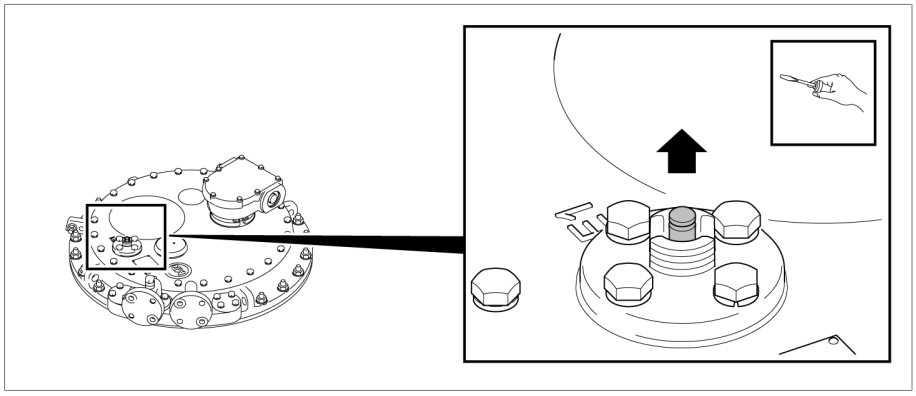

Figure 104: Valve tappet

4. Seal air-vent valve E1 with screw cap (tightening torque 10 Nm).

6.1.1.2 Bleeding suction pipe on pipe connection S

1. Remove screw cap from pipe connection S.

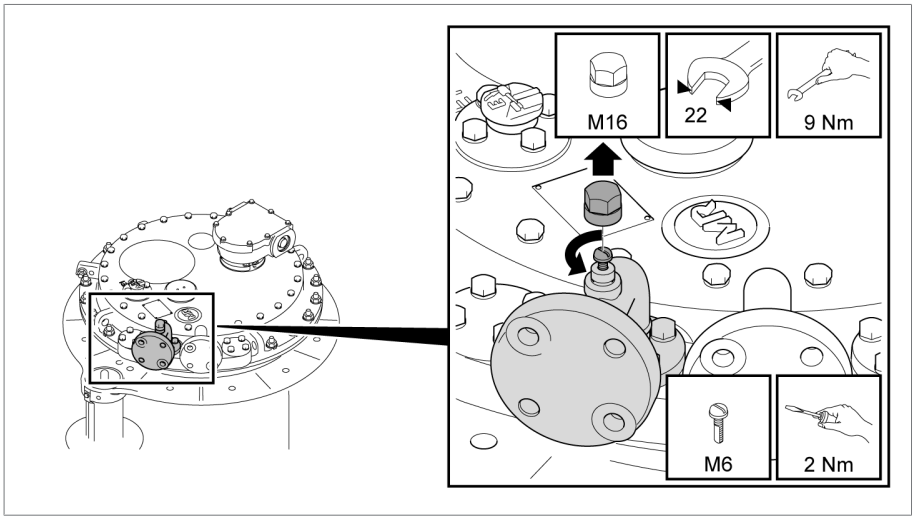

Figure 105: Pipe connection S

2. Open vent screw and bleed piping.
3. Close vent screw.
4. Seal vent screw with screw cap.

6.1.2 Grounding the on-load tap-changer

If necessary, reduce the stated tightening torque according to the grounding line used.

1. Ground the on-load tap-changer. To do this, only connect the grounding terminal on the on-load tap-changer head with the transformer cover.

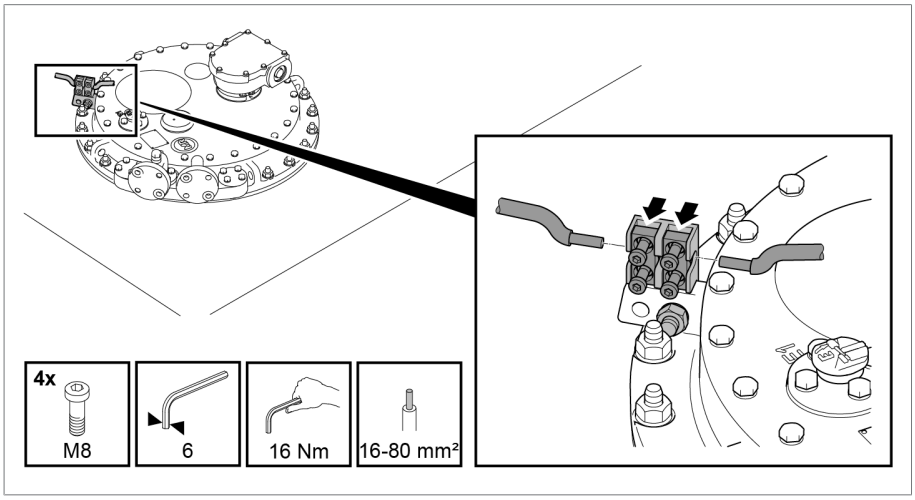

Figure 106: Grounding terminal on on-load tap-changer head

2. Ground the motor-drive unit. To do this, only connect the motor-drive unit's ground connection with protection against twisting to the transformer's ground connection.

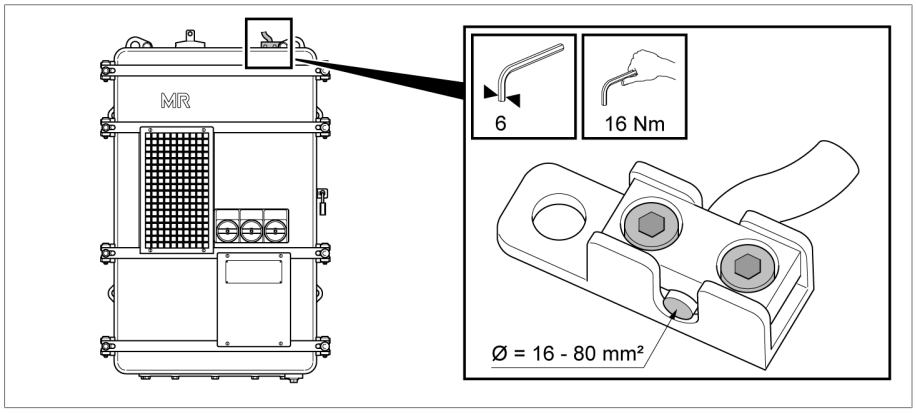

Figure 107: Grounding screw on motor-drive unit

3. Connect housing of temperature sensor with grounding screw on on-load tap-changer head.

6.1.3 Checking motor-drive unit

NOTICE **Damage to the on-load tap-changer / de-energized tap-changer!**

Damage to the on-load tap-changer / de-energized tap-changer due to actuation of the on-load tap-changer / de-energized tap-changer without insulating fluid.

► Ensure that the selector / de-energized tap changer is fully immersed in insulating fluid and that the oil compartment of the on-load tap-changer is completely filled with insulating fluid.

Prior to commissioning the transformer, check whether the motor-drive unit and on-load tap-changer are correctly coupled and that the motor-drive unit functions correctly.

Tests on the motor-drive unit

1. Perform function checks as described in relevant MR operating instructions for motor-drive unit.
2. **NOTICE!** An incorrectly coupled motor-drive unit will lead to damage to the on-load tap-changer. Undertake trial tap-change operations across the entire range of settings. Ensure that in each operating position, the tap position indicators of motor-drive unit and on-load tap-changer (inspection window in the on-load tap-changer head) match.

Dielectric tests on transformer wiring

► Note information relating to dielectric tests on transformer wiring in relevant MR operating instructions for motor-drive unit.

6.1.4 High-voltage tests on the transformer

Note the following points before performing high-voltage tests on the transformer:

- Ensure that the oil compartment of the on-load tap-changer is completely filled with insulating fluid.
- Ensure that all protective devices for the on-load tap-changer are functioning correctly and are ready for use.
- Ensure that the ground connections on the motor-drive protective housing and protective housing fastening are free of paint.
- Only perform high voltage test if motor-drive unit door is closed.
- Disconnect external connections to electronic components in the motor-drive unit to prevent damage from overvoltage.
- When connecting the motor-drive unit's supply voltage, only use the cable bushings in the protective housing base intended for lead insertion.
- Guide all ground connecting leads to one central connection point (establishment of suitable reference earth).
- Disconnect all electronic components before the high voltage test. Before a dielectric test of the wiring, remove all devices with a withstand voltage of < 1000 V.
- Remove leads used for testing before the high voltage test as these function as antennas.
- Wherever possible, route the measurement leads and data leads separately to the energy cables.

Contact the manufacturer if you have any questions about possible sources of danger.

6.2 Transporting transformer to the operating site

NOTICE

Damage to motor-drive unit!

Damage to the motor-drive unit due to condensate in protective housing of motor-drive unit.

► Always keep protective housing of the motor-drive unit tightly closed.

► In the event of downtime lasting more than 8 weeks prior to initial commissioning, connect and operate the anti-condensation heater in the motor-drive unit. If this is not possible, place a sufficient amount of desiccant in the protective housing.

6.2.1 Transport with drive removed

1. Ensure that the drive and the on-load tap-changer are in the adjustment position.
2. Remove the drive.

3. Do not actuate the drive while the on-load tap-changer is uncoupled and do not turn the output shaft.
4. Do not actuate an on-load tap-changer which is uncoupled and do not turn its drive shaft.
5. Transport the drive to the installation site in the MR delivery packaging.
6. Fit the drive [▶Section 5.5.3, Page 87] and the drive shaft to the transformer at the installation site.

6.2.2 Transport with full transformer tank and without oil conservator

Attach a connecting lead between the on-load tap-changer's oil compartment and the transformer tank if the transformer has been transported with a full tank and without an oil conservator.

▶ Establish the connecting lead on the on-load tap-changer head between connections E2 and one of the free pipe connections R, S or Q.

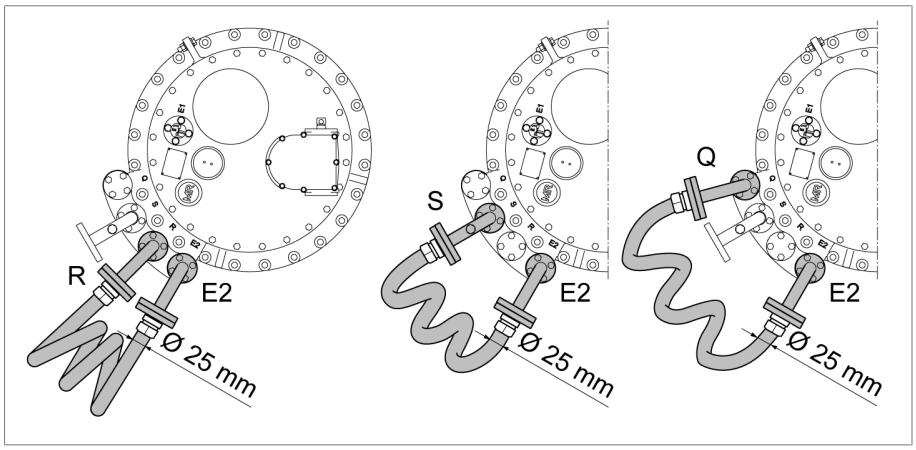

Figure 108: Connecting lead

In the event of a short-term immobilization time (maximum of 4 weeks) without an oil conservator, it is also sufficient to remove approximately 7 liters of insulating fluid from the on-load tap-changer oil compartment.

6.2.3 Transport with empty transformer tank

NOTICE

Damage to the on-load tap-changer!

The on-load tap-changer may be subject to oscillating movements during transformer transportation if the transformer is transported without insulating fluid and the on-load tap-changer oil compartment is transported with insulating fluid. These oscillating movements can lead to damage to the on-load tap-changer.

► Completely empty the oil compartment if the transformer is to be transported without insulating fluid.

► Preserve the oil compartment in the same way as the transformer (for example by filling with N2).

6.2.3.1 Emptying oil compartment via pipe connection S

1. De-energize all auxiliary circuits (e.g tap-change supervisory device, pressure relief device, pressure monitoring device).
2. With the stop-cock (slide valve) between oil conservator and oil compartment open, open air-vent valve E1 on the on-load tap-changer head.
3. Discharge the gas from under the on-load tap-changer cover. Ensure sufficient fresh air (e.g. in transformer cells and work tents) when doing so.
4. Once the gas has been discharged and the insulating fluid is flowing out of the air-vent valve, close the air-vent valve and close the stop-cock between the oil conservator and oil compartment.
5. Open air-vent valve again and drain off approximately 5–10 liters of insulating fluid via the pipe connection S until the area under the on-load tap-changer head cover is free of insulating fluid.
6. Loosen 24 screws M10 / wrench size 17 with locking elements on the on-load tap-changer head cover.
7. Remove on-load tap-changer head cover.
8. Extract insulating fluid via pipe connection S.
9. Open stop-cock between oil conservator and oil compartment.

   ⇨ Insulating fluid flows out of the oil conservator into the oil compartment.
10. Extract insulating fluid via pipe connection S.
11. Place on-load tap-changer head cover on the on-load tap-changer head.
12. Screw down on-load tap-changer head cover using 24 screws M10 / wrench size 17 and locking elements (tightening torque 34 Nm).

6.2.3.2 Emptying oil compartment without oil suction pipe

⚠ WARNING

Danger of explosion!

Explosive gases under the on-load tap-changer head cover can deflagrate or explode and result in severe injury or death.

- ▶ Ensure that there are no ignition sources such as open flames, hot surfaces or sparks (e.g. caused by the build-up of static charge) in the immediate surroundings and that none occur.
- ▶ De-energize all auxiliary circuits (for example tap-change supervisory device, pressure relief device, pressure monitoring device) before removing the on-load tap-changer head cover.
- ▶ Do not operate any electrical devices during the work (e.g. risk of sparks from impact wrench).

1. De-energize all auxiliary circuits (for example the tap-change supervisory control, pressure relief device, pressure-operated relays).
2. If the stop-cock (slide valve) between the oil conservator and oil compartment is open, open the air-vent valve E1 on the on-load tap-changer head.
3. Drain off the gas from under the on-load tap-changer cover. Ensure sufficient fresh air (for example in transformer cells and work tents).
4. Once the gas has been drained off and the oil is flowing out of the air-vent valve, close this valve and close the stop-cock between the oil conservator and oil compartment.
5. Open air-vent valve again and drain off around 5–10 liters of oil via the drain pipe until the area under the on-load tap-changer head cover is free of oil.
6. Loosen 24 screws M10/wrench size 17 with locking washers on on-load tap-changer head cover.
7. Remove the on-load tap-changer head cover.
8. Carefully slide oil-resistant plastic pipe (outer diameter maximum 30 mm, minimum length = height of on-load tap-changer + 50 mm) past gearbox plate between diverter switch and oil compartment to base of on-load tap-changer, see appendix [▶ Section 9.6, Page 140].
9. Extract oil.
10. Open stop-cock between oil conservator and oil compartment.

    ⇨ The oil from the oil conservator flows into the oil compartment.
11. Extract oil.
12. Place the on-load tap-changer head cover on the on-load tap-changer head.
13. Use 24 screws M10/wrench 17 to screw down on-load tap-changer head cover (tightening torque 34 Nm).

6.3 Commissioning transformer at operating site

Before energizing the transformer, check that the motor-drive unit and protective devices are functioning correctly and fill the on-load tap-changer oil compartment with fresh insulating fluid.

6.3.1 Filling the oil compartment of the on-load tap-changer with insulating fluid

NOTICE **Damage to the on-load tap-changer!**

Unsuitable insulating fluids cause damage to the on-load tap-changer.

- ► Use insulating fluids that meet the requirements in accordance with IEC 60296.
- ► If approved by the transformer manufacturer, you can use synthetic esters in accordance with IEC 61099 or natural esters in accordance with IEC 62770 approved by Maschinenfabrik Reinhausen GmbH.

1. Establish a connecting lead between pipe connection E2 and one of the pipe connections R, S or Q to ensure equal pressure in the oil compartment and transformer during evacuation.

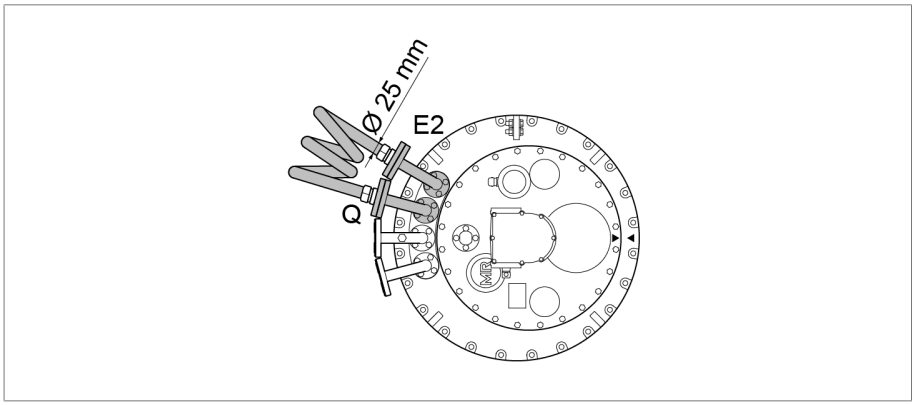

Figure 109: Connecting lead between E2 and Q

2. Fill on-load tap-changer with new insulating fluid using one of the two free pipe connections of the on-load tap-changer head.

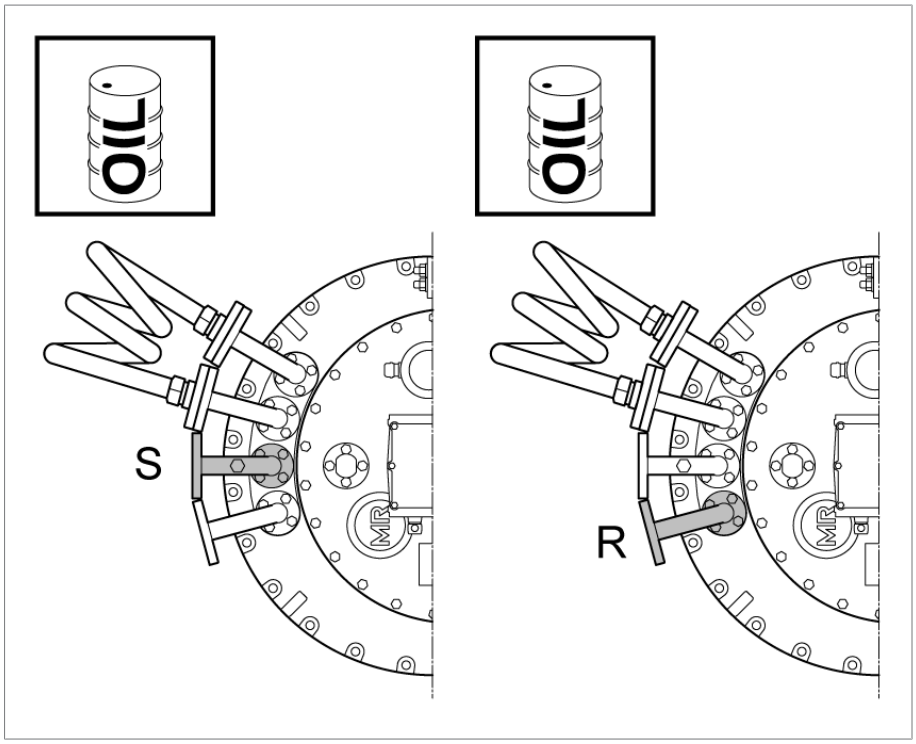

Figure 110: Pipe connections S and R

3. Take an insulating fluid sample from the oil compartment.
4. Record the temperature of the sample immediately after the sample is taken.
5. Determine the dielectric strength and water content at a sample temperature of 20°C ± 5°C. The dielectric strength and water content must comply with the limit values [▶ Section 8.3, Page 134] specified in the technical data.

6.3.2 Bleeding on-load tap-changer head and suction pipe

6.3.2.1 Bleeding on-load tap-changer head

1. Open all forward and return valves in the pipe system.

2. Remove screw cap on air-vent valve E1 on the on-load tap-changer head cover.

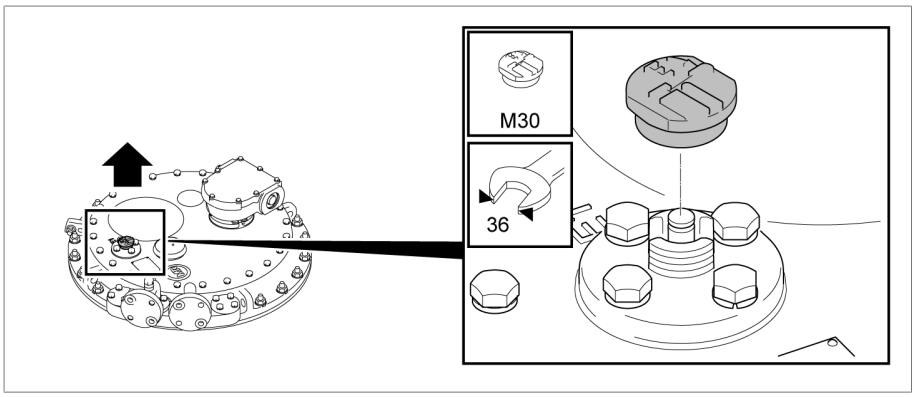

Figure 111: Air-vent valve E1

3. Use screwdriver to lift valve tappet on air-vent valve E1 and bleed on-load tap-changer head.

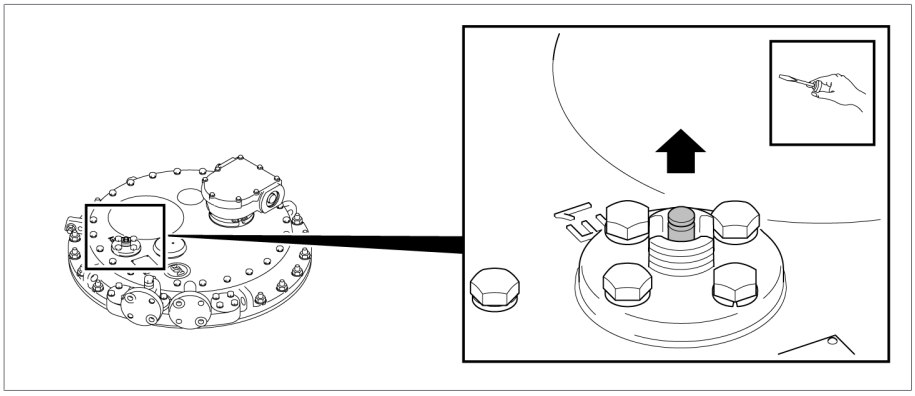

Figure 112: Valve tappet

4. Seal air-vent valve E1 with screw cap (tightening torque 10 Nm).

6.3.2.2 Bleeding suction pipe on pipe connection S

1. Remove screw cap from pipe connection S.

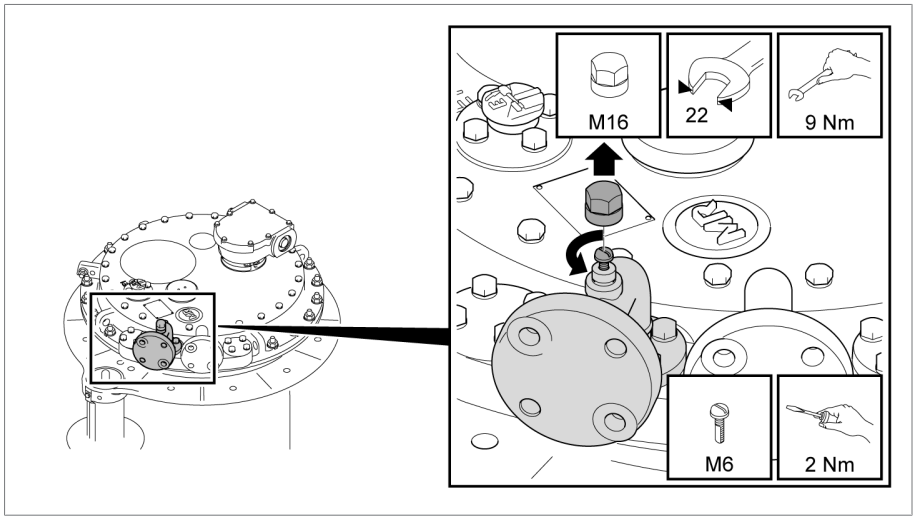

Figure 113: Pipe connection S

2. Open vent screw and bleed piping.
3. Close vent screw.
4. Seal vent screw with screw cap.

6.3.3 Checking motor-drive unit

NOTICE

Damage to the on-load tap-changer / de-energized tap-changer!

Damage to the on-load tap-changer / de-energized tap-changer due to actuation of the on-load tap-changer / de-energized tap-changer without insulating fluid.

► Ensure that the selector / de-energized tap changer is fully immersed in insulating fluid and that the oil compartment of the on-load tap-changer is completely filled with insulating fluid.

NOTICE

Damage to the on-load tap-changer and motor-drive unit!

Damage to on-load tap-changer and motor-drive unit due to incorrect use of position transmitter equipment.

- ► Only circuits stated in the chapter Technical data for position transmitter equipment may be connected to the position transmitter module connections.
- ► The switchover point of the position transmitter equipment in the motor-drive unit is not the same as the switchover point of the diverter switch operation. This depends on the type of diverter switch. This fact should be noted when project planning the locking circuits between the motor-drive unit and external equipment (e.g. transformer circuit breaker).
- ► Therefore, the "Tap changer in operation" position transit contact shown in the connection diagram should be used for external monitoring, locking and control purposes instead of the position transmitter equipment.

Prior to commissioning the transformer, check whether the motor-drive unit and on-load tap-changer are correctly coupled and that the motor-drive unit functions correctly.

Tests on the motor-drive unit

1. Perform function checks as described in relevant MR operating instructions for motor-drive unit.
2. **NOTICE!** An incorrectly coupled motor-drive unit will lead to damage to the on-load tap-changer. Undertake trial tap-change operations across the entire range of settings. Ensure that in each operating position, the tap position indicators of motor-drive unit and on-load tap-changer (inspection window in the on-load tap-changer head) match.

Dielectric tests on transformer wiring

- ► Note information relating to dielectric tests on transformer wiring in relevant MR operating instructions for motor-drive unit.

6.3.4 Checking protective relay

✓ Check that the protective relay is functioning correctly before commissioning the transformer:

1. Ground the transformer on the high-voltage and low-voltage sides. Ensure that the working ground connection on the transformer is not removed during testing.
2. Ensure that transformer remains de-energized during testing.
3. Deactivate the automatic fire extinguishing device.
4. Open terminal box of protective relay.
5. Press OFF test button.
6. Leave the transformer's danger zone.
7. Ensure that the transformer's circuit breaker cannot be closed.

   ⇨ Passive protection test

8. Press IN SERVICE test button.
9. Leave the transformer's danger zone.
10. Close the transformer's circuit breaker with isolating switches open and the transformer grounded on all sides.
11. Press OFF test button.
12. Ensure that the transformer's circuit breaker is open.
    ⇨ Active protection test.
13. Press IN SERVICE test button to reset the protective relay.

6.3.5 Commissioning the transformer

✓ The signaling contact for falling below the minimum insulating fluid fill level in the on-load tap-changer's oil conservator is looped into the tripping circuit of the circuit breaker.

✓ The protective relay and additional protective devices are looped into the circuit breaker's tripping circuit.

✓ The motor-drive unit and all protective devices are functioning correctly and are ready for use.

✓ The oil compartment of the on-load tap-changer is completely filled with insulation fluid.

✓ All stop-cocks between on-load tap-changer and oil conservator of the on-load tap-changer are open.

1. Switch on transformer.
2. **NOTICE!** Inrush current impulses can be significantly greater than the transformer rated current and may lead to current paths with asymmetrical or non-sinusoidal curve shapes and, as a result, overload the on-load tap-changer during the diverter switch operation. Only perform tap-change operations - whether under no load or under load conditions - once the inrush current impulse has subsided.

7 Fault elimination

⚠ WARNING

Danger of explosion!

Danger of death from explosive gases under the on-load tap-changer head cover!

- ► Ensure that there are no open flames, hot surfaces or sparks (for example caused by static charging) in the immediate surroundings and that none arise.
- ► De-energize all auxiliary circuits (for example tap-change supervisory device) before removing the on-load tap-changer head cover.
- ► Do not operate any electrical devices during the work (for example risk of sparks caused by impact wrench).
- ► Only use conductive and grounded hoses, pipes, and pump equipment that are approved for flammable liquids.

NOTICE

Damage to the on-load tap-changer and transformer!

If the protective relay or other protective devices trip, this can indicate damage to the on-load tap-changer and transformer. The transformer must not be energized without being inspected first.

- ► Check on-load tap-changer and transformer when protective relay or other protective devices have been tripped.
- ► Do not use the equipment again until you are sure there is no damage to the on-load tap-changer or transformer.

NOTICE

Damage to motor-drive unit!

Damage to the motor-drive unit due to condensate in protective housing of motor-drive unit.

- ► Always keep protective housing of the motor-drive unit tightly closed.
- ► In the event of operation interruptions of more than 2 weeks, connect and operate the anti-condensation heater in the motor-drive unit. If this is not possible, e.g. during transportation, place a sufficient amount of desiccant in the protective housing.

The table below is intended to assist with detecting and, where possible, remedying faults.

For more information, please consult the operating instructions for the protective relay or the relevant protective device.

In the event of faults on the on-load tap-changer and motor-drive unit which cannot be easily corrected on site, or if the protective relay or additional protective devices have been tripped, please inform your authorized MR representative, the transformer manufacturer or contact MR directly.

Maschinenfabrik Reinhausen GmbH
Technical Service
Postfach 12 03 60

93025 Regensburg
Germany
Phone: +49 94140 90-0
Fax: +49 9 41 40 90-7001
E-mail: service@reinhausen.com
Internet: www.reinhausen.com

Fault description	Action
Tripping of protective relay (for example RS-Ex)	See "Tripping of the protective relay and re-commissioning the transformer". Also contact MR.
Activation of rupture disk in on-load tap-changer head cover	On-load tap-changer and transformer must be checked. Depending on the cause of tripping, take measurements / carry out checks on the transformer. Contact MR to check the on-load tap-changer.
Tripping of motor protective switch in motor-drive unit	See the "Fault elimination" chapter in the operating instructions of the TAPMOTION® ED-Ex motor-drive unit.
Tripping of signaling contact that indicates that the oil level has fallen below the minimum oil level in the on-load tap-changer oil conservator	Check pipe system (pipes etc.) and on-load tap-changer head for leaks. Check oil level and oil quality of diverter switch oil in accordance with operating instructions for on-load tap-changer. If the fill level has fallen below the limit values, also contact MR.
On-load tap-changer not changing tap position (sluggishness, Raise keys / Lower keys not working, no audible diverter switch action)	Contact MR.
No change in voltage on transformer despite change in position on motor-drive unit	Contact MR.
Tap position indicator on motor-drive unit and on-load tap-changer different	Contact MR.
Noises on drive shaft or motor-drive unit when changing tap position	Ensure proper mounting of the drive shaft in accordance with its operating instructions. Check that hose clips and protective covers are seated correctly. Contact MR in the event of noise from the motor-drive unit.
Red message on monitoring unit	If possible read out database and send to MR along with error code.
Warning or tripping of Buchholz relay on transformer	Notify manufacturer of transformer.
Deviation from desired value when measuring winding resistance of transformer	Contact manufacturer of transformer and, if necessary, MR, and provide measured values.
Deviation from desired value during dissolved gas analysis (transformer oil)	Contact manufacturer of transformer and, if necessary, MR, and provide measured values.
Deviation from desired value during transformer ratio test	Contact manufacturer of transformer and, if necessary, MR, and provide measured values.
Deviation from limit value for insulating fluids	Carry out insulating fluid change, check oil conservator breather of on-load tap-changer.

Table 14: Fault elimination

7.1 Tripping the protective relay and re-commissioning the transformer

⚠ WARNING

Danger of explosion!

Explosive gases in the protective relay can deflagrate or explode and result in severe injury or death.

- ► Wait 15 minutes after switching off the transformer before beginning further work on the protective relay so that the gases can dissipate.
- ► Ensure that there are no ignition sources such as naked flames, hot surfaces or sparks (e.g. caused by the build-up of static charge) in the immediate surroundings and that none occur.
- ► De-energize all auxiliary circuits before beginning work.
- ► Do not operate any electrical devices during the work (e.g. risk of sparks from impact wrench).

⚠ WARNING

Danger of death or severe injury!

Danger of severe injury or death if on-load tap-changer and transformer are insufficiently tested.

- ► Be sure to contact Maschinenfabrik Reinhausen to check on-load tap-changer and transformer if the protective relay has tripped.
- ► Only use the equipment again when you are sure there is no damage to the on-load tap-changer or transformer.

When the circuit breakers have been tripped by the protective relay, proceed as follows:

1. Establish time of tripping.
2. Determine operating position of on-load tap-changer.
3. As a precaution, block the motor-drive unit by tripping the motor protective switch to prevent the on-load tap-changer from being actuated by remote control.
4. Check the on-load tap-changer head cover. If insulating fluid is leaking, close the oil conservator stop valve immediately.
5. Check whether the flap valve of the protective relay is in the OFF or OPERATION position.

7.1.1 Flap valve in OPERATION position

If the flap valve is in the OPERATION position, there may be a fault in the tripping circuit. Check the tripping circuit in this case. If you are not able to clarify why the protective relay tripped, be sure to contact Maschinenfabrik Reinhausen to check the on-load tap-changer.

7.1.2 Flap valve in OFF position

If the flap valve is in the OFF position, proceed as follows:

1. Ensure that the transformer is not started up under any circumstances.
2. Contact and inform Maschinenfabrik Reinhausen of the following:
   - ⇨ Serial number of protective relay and on-load tap-changer
   - ⇨ What was the load of the transformer at the instant of tripping?
   - ⇨ Was the on-load tap-changer moved immediately before or during tripping?
   - ⇨ Did any other protective devices of the transformer respond at the instant of tripping?
   - ⇨ Were switching operations in the network being carried out at the instant of tripping?
   - ⇨ Were overvoltages registered at the instant of tripping?
3. Take further action in agreement with Maschinenfabrik Reinhausen.

7.1.3 Re-commissioning the transformer

Once the reason for the protective relay tripping has been established and remedied, you can re-commission the transformer:

1. Check the protective relay.
2. Commission the transformer.

8 Technical data

An overview of all key technical data for the on-load tap-changer and motor-drive unit exists in the form of separate documents, which are available on request.

8.1 Permissible ambient conditions

Air temperature during operation	-25°C…+50°C
Temperature of the insulating fluid in operation	Insulating fluid in accordance with IEC 60296: -25°C…+105°C (when the transformer is in emergency operation based on IEC 60076-7, up to +110°C in accordance IEC 60214-1) Synthetic ester liquid in accordance with IEC 61099: -15°C…+105°C (when the transformer is in emergency operation, up to +115°C)
Transport temperature, storage temperature	-40°C…+50°C
Drying temperatures	See installation and commissioning instructions, "Assembly" chapter
Compressive strength	See technical data TD 61 – General Section
Alternative insulating fluids	Synthetic ester liquid (IEC 61099) on request
Installation height of the oil conservator	See technical data TD 61 – General Section
Installation height above sea level	See technical data TD 61 – General Section

Table 15: Permissible ambient conditions

8.2 Technical data for protective relay

The technical data for the protective relay RS 2001-Ex is listed in the following. In accordance with DIN EN 60255-1, operational accuracy = base accuracy

Housing	Outdoor model
Degree of protection	IP 66
Relay actuation	Flap valve with aperture
Vibration immunity	up to max. 3g
Weight	approx. 3.5 kg
Oil flow speed of available types when tripped (oil temperature 20 °C)	0.65 ±0.15 m/s 1.20 ±0.20 m/s 3.00 ±0.40 m/s 4.80 ±0.60 m/s

Table 16: General technical data

Tripping circuit

The protective relay can be supplied with two independent dry-reed magnetic switches. These can be designed as normally open (NO) or normally closed (NC) contacts (see dimensional drawing supplied).

Electrical data	
DC switching capacity	1.2 W…200 W
AC switching capacity (50 Hz)	1.2 VA…400 VA
Switching voltage AC/DC	24 V…250 V
Switched current AC/DC	4.8 mA…2 A

Table 17: Electrical data

Switching capacity (switching load on an off)	
Minimum switched current AC/DC (lowest voltage)	50 mA (at 24 V)
Minimum switched current AC/DC (highest voltage)	4.8 mA (at 250 V)
Maximum switched current DC (highest current)	1.6 A (at 125 V with L/R = 40 ms)
Maximum switched current DC (highest voltage)	0.9 A (at 250 V with L/R = 40 ms)
Maximum switched current AC (highest current)	2 A (at 125 V with cos φ = 0.6)
Maximum switched current AC (highest voltage)	1.6 A (at 250 V with cos φ = 0.6)
Switching operations	1,000 cycles

Table 18: Switching capacity (switching load on an off)

Dielectric strength	
AC dielectric strength between all voltage-carrying connections and the grounded parts	2,500 V, 50 Hz, test duration 1 minute
AC dielectric strength between the opened contacts	2,000 V, 50 Hz, test duration 1 minute

Table 19: Dielectric strength

Electrical data	
DC switching capacity	1.2 W…250 W
AC switching capacity (50 Hz)	1.2 VA…400 VA
Switching voltage AC/DC	24 V…250 V
Switched current AC/DC	4.8 mA…2 A

Table 20: Electrical data

Switching capacity (switching load on an off)	
Minimum switched current AC/DC (lowest voltage)	50 mA (at 24 V)
Minimum switched current AC/DC (highest voltage)	4.8 mA (at 250 V)

Switching capacity (switching load on an off)	
Maximum switched current DC (highest current)	2 A (at 125 V with L/R = 40 ms)
Maximum switched current DC (highest voltage)	1 A (at 250 V with L/R = 40 ms)
Maximum switched current AC (highest current)	2 A (at 125 V with cos φ = 0.6)
Maximum switched current AC (highest voltage)	1.6 A (at 250 V with cos φ = 0.6)
Switching operations	1,000 cycles

Table 21: Switching capacity (switching load on an off)

Dielectric strength	
AC dielectric strength between all voltage-carrying connections and the grounded parts	2,500 V, 50 Hz, test duration 1 minute
AC dielectric strength between the opened contacts	2,000 V, 50 Hz, test duration 1 minute

Table 22: **Dielectric strength**

Ambient conditions

Ambient temperature Ta	-25 °C…+50 °C
Oil temperature	<130 °C
Air pressure	Corresponds to 0 m…4,000 m above mean sea level

Table 23: Ambient conditions

8.2.1 Protective relay with several dry-reed magnetic switches

The protective relay can be supplied with several independent dry-reed magnetic switches. These can be designed as normally open (NO) or normally closed (NC) contacts and are electrically isolated (see dimensional drawing supplied).

Electrical data for normally open (NO) and normally closed (NC) dry-reed magnetic switch

8.2.2 Tests

Electrical safety

IEC 61010-1	Safety requirements for electrical measurement and control and regulation equipment and laboratory instruments ▪ Overvoltage category III ▪ Contamination level 2

Table 24: Electrical safety

8.3 Limit values for dielectric strength and water content of insulating fluids

The following tables specify the limit values for dielectric strength (measured in accordance with IEC 60156) and water content (measured in accordance with IEC 60814) of insulating fluids for the VACUTAP® on-load tap-changer. The values have been determined based on IEC 60422, IEC 61203 and IEEE C57.147.

Limit values for insulating fluids in accordance with IEC 60296	**U_d**	**H_2O**
When commissioning the transformer for the first time	> 60 kV/2.5 mm	< 12 ppm
During operation	> 30 kV/2.5 mm	< 30 ppm
After maintenance	> 50 kV/2.5 mm	< 15 ppm

Table 25: Insulating fluids in accordance with IEC 60296

Limit values for synthetic esters in accordance with IEC 61099	**U_d**	**H_2O**
When commissioning the transformer for the first time	> 60 kV/2.5 mm	≤ 100 ppm
During operation	> 30 kV/2.5 mm	≤ 400 ppm
After maintenance	> 50 kV/2.5 mm	≤ 150 ppm

Table 26: Synthetic esters in accordance with IEC 61099

9 Drawings

9.1 External view (737774)

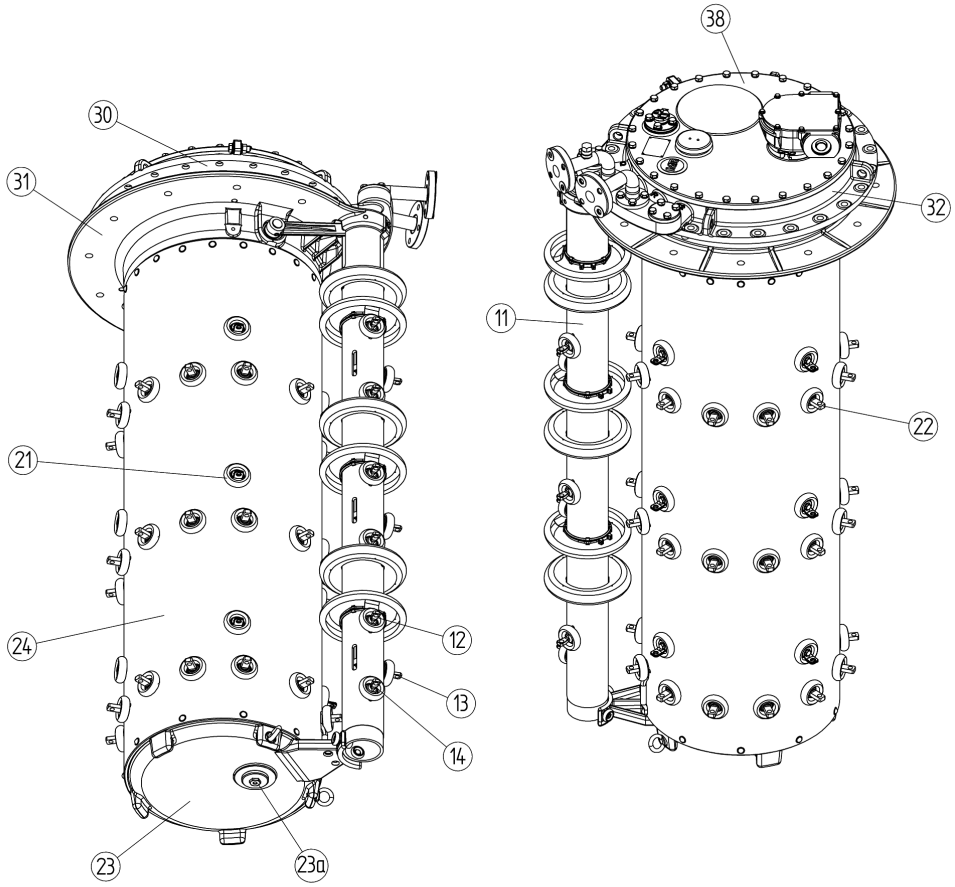

11 = Change-over selector pipe

12 = Change-over selector terminal "+"

13 = Change-over selector terminal "0"

14 = Change-over selector terminal "-"

21 = Take-off terminal

22 = Fine tap selector terminal

23 = Oil compartment bottom with kerosene drain plug 23a

24 = Tap changer oil compartment

30 = Tap changer head complete with 31 und 32 , refer to 898 863 : and 737 060 :

31 = Tap changer head - bottom part

32 = Tap changer head - top part

38 = Tap changer head cover

9.2 On-load tap-changer head without oil suction pipe (898863)

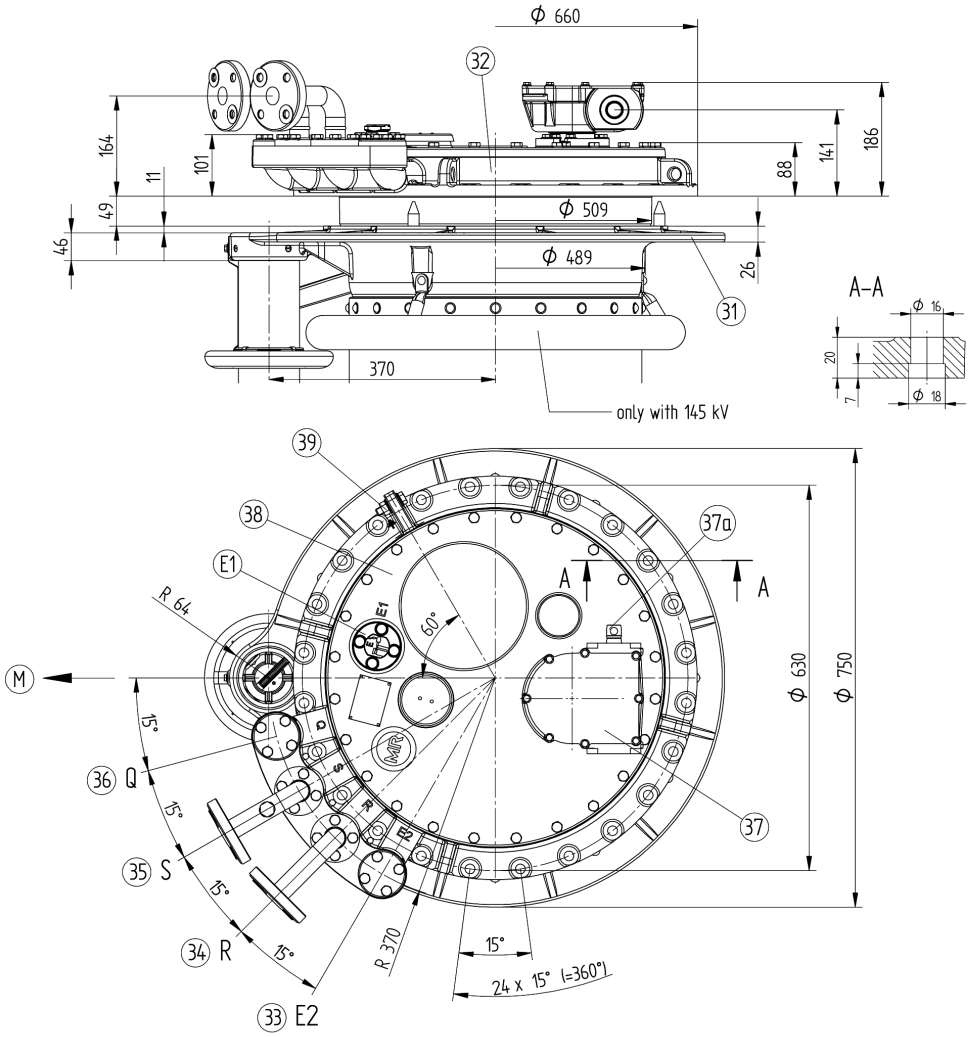

(E1) Bleeding facility for Tap-Changer

(31) Tap-Changer head – bottom part

(32) Tap-Changer head – top part , can be turned towards the bottom part (31) of the head in steps of 15°
The Tap-Changer head cover cannot be turned.

(33) E2 = Bleeding facility for space under the head outside the oil compartment

(34) Pipe connection R for protective relay

(35) Pipe connection S

(36) Pipe connection Q (optional)

Connections can be swivelled 360°
dimensions and selection 899 496 :

(37) Upper gear unit with drive shaft 37a , dimensions and selection see 737 782 :

(38) Tap changer head cover

(39) Earth connection M12

(M) Drive side

⚠ The upper part of the OLTC head (32) CANNOT be turned in the model with oil suction pipe , see drawing 737 060 :

9.3 On-load tap-changer head with oil suction pipe (737060)

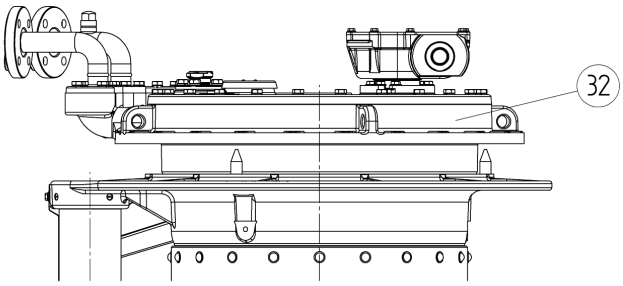

POSITION OF THE UPPER PART OF THE OLTC HEAD IN THE MODEL WITH OIL SUCTION PIPE

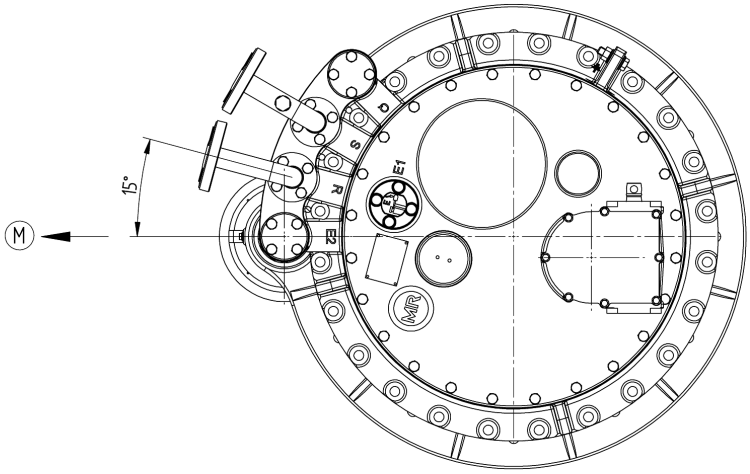

ALL OTHER DIMENSIONS OF THE OLTC HEAD SEE DRAWING 898 863 :

(M) = DRIVE SIDE

⚠ THE UPPER PART OF THE OLTC HEAD (32) CANNOT BE TURNED IN THE MODEL WITH OIL SUCTION PIPE

9.4 Installation drawing (738902)

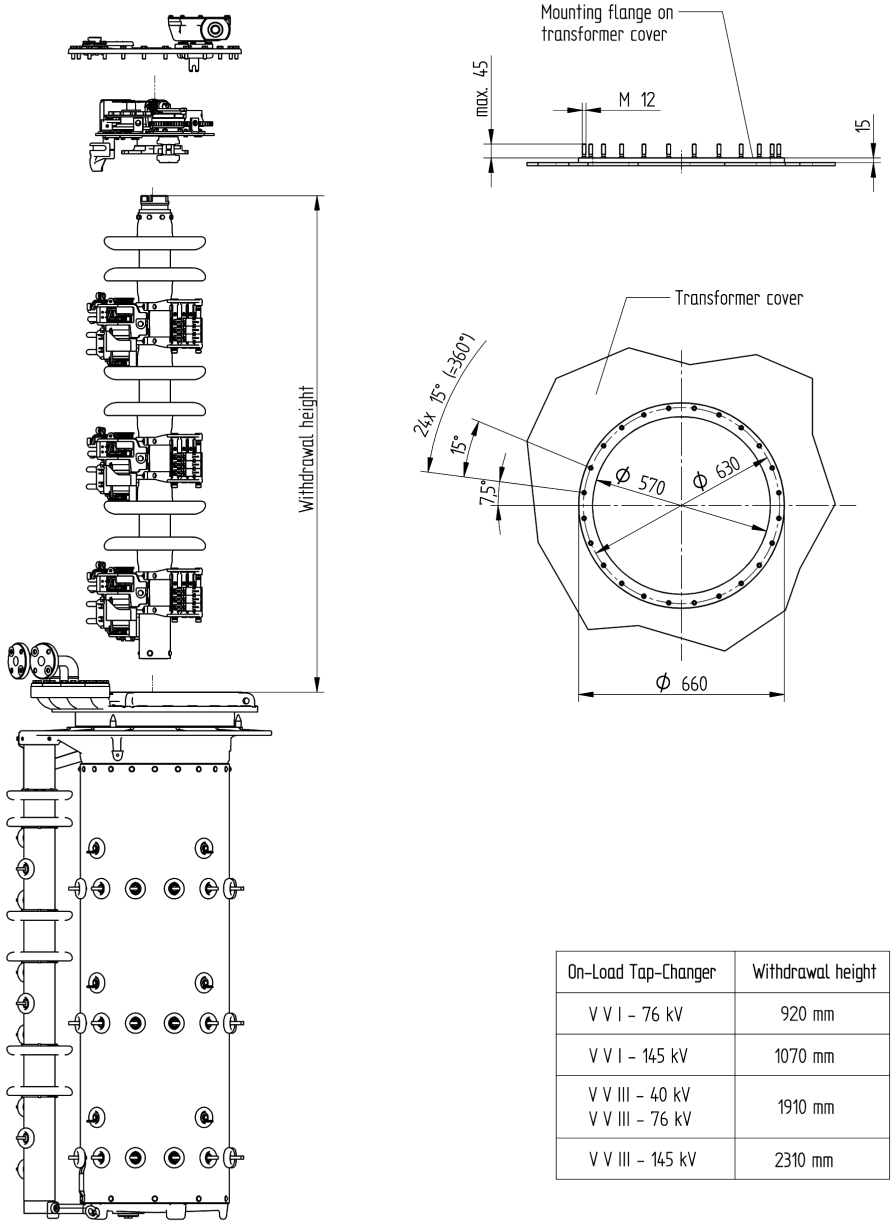

On-Load Tap-Changer	Withdrawal height
V V I - 76 kV	920 mm
V V I - 145 kV	1070 mm
V V III - 40 kV V V III - 76 kV	1910 mm
V V III - 145 kV	2310 mm

⚠ The withdrawal height corresponds to the clearance between the cover flange and the lifting device of the OLTC insert, while the mounting rod is inserted. Additional fixing pads, which may be necessary for affixing the OLTC insert, have to be considered too.

9.5 Oil suction pipe (739172)

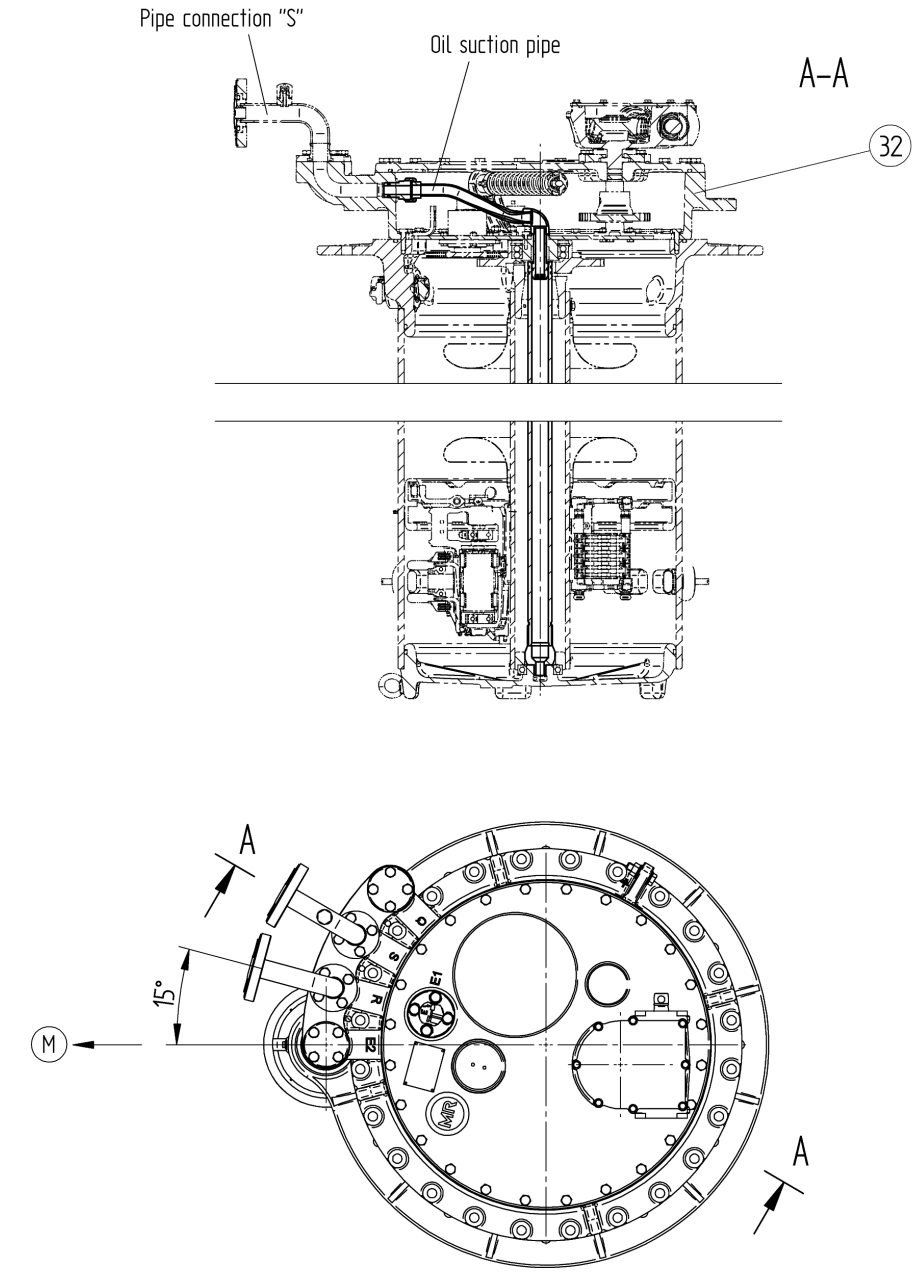

M Drive side

The upper part of the OLTC head 32 CANNOT be turned in the model with oil suction pipe , see drawing 737 060 :

9.6 Dimensions of oil suction pipe (not supplied by MR, 734342)

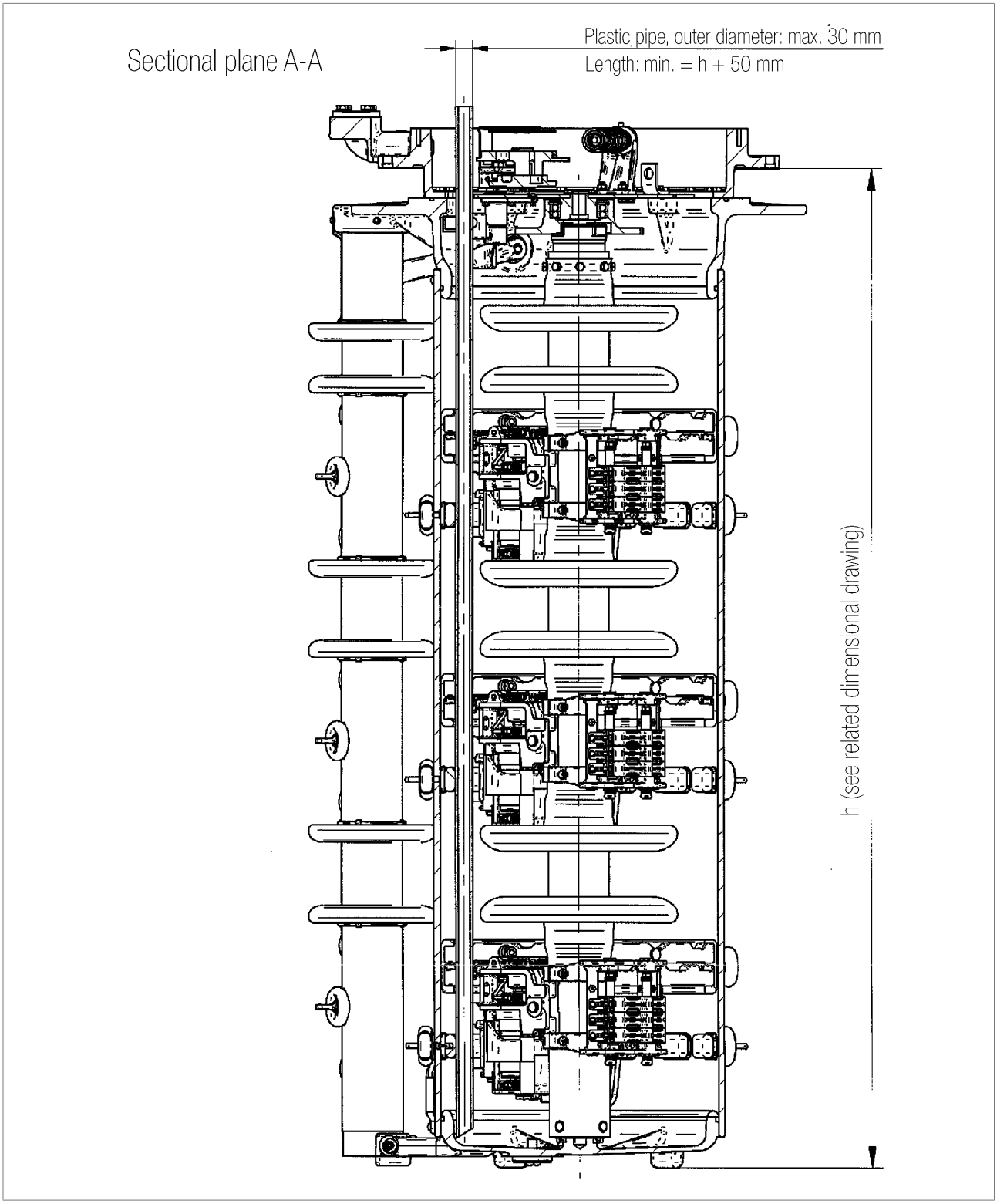

9.7 Tracing template for on-load tap-changer head (893787)

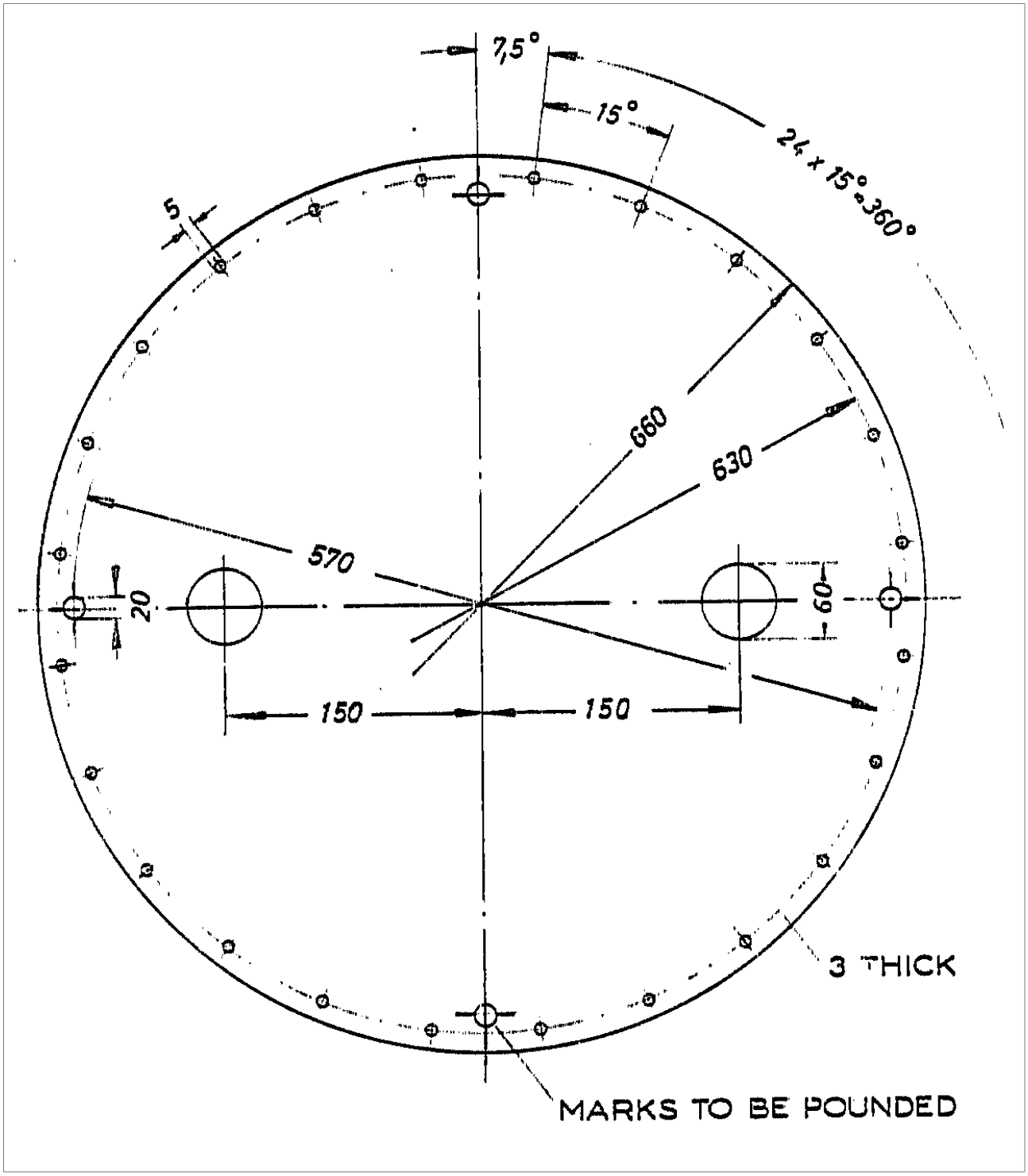

9.8 Mounting drawing (898866)

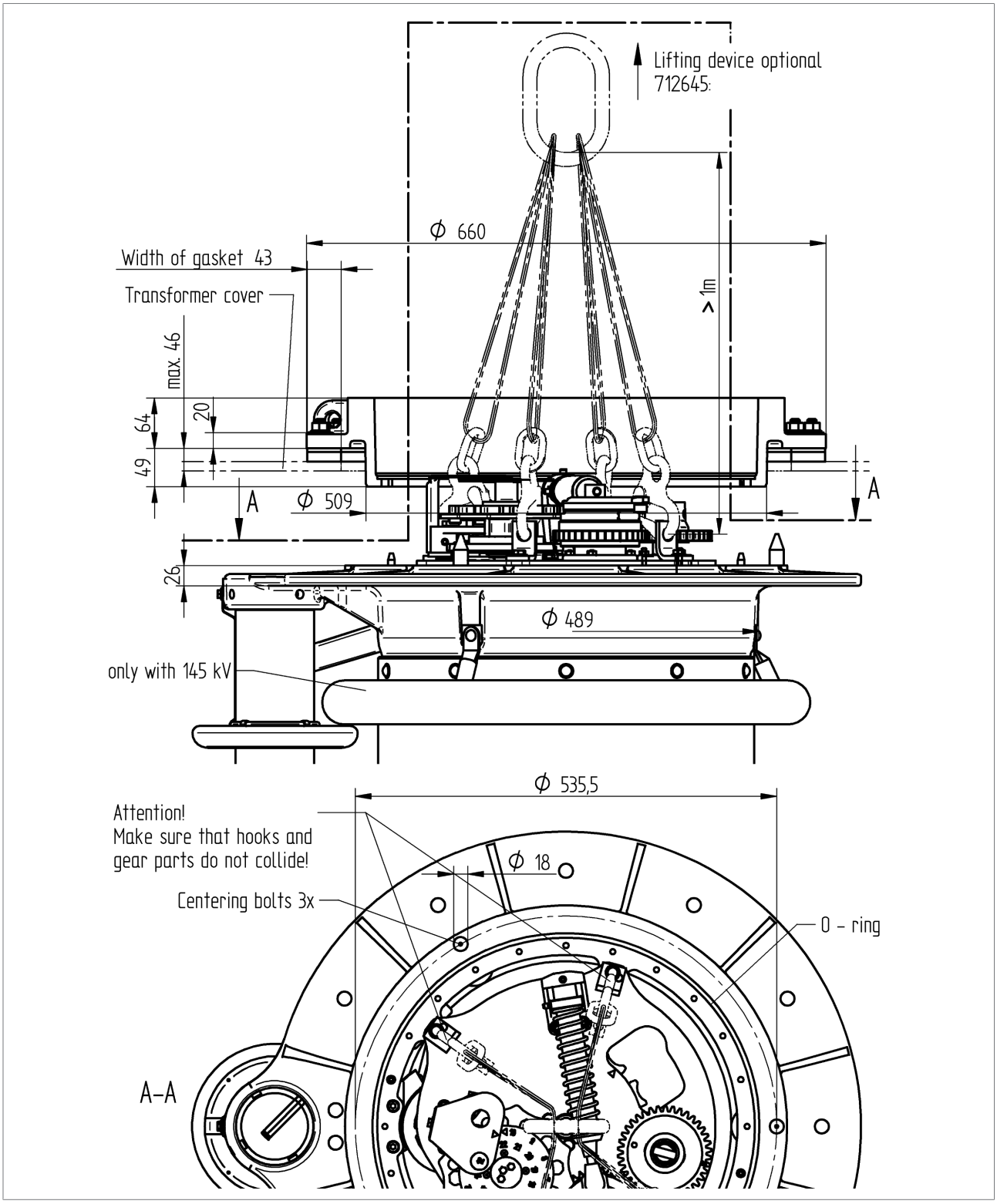

9.9 Mounting with bell-type tank installation (899110)

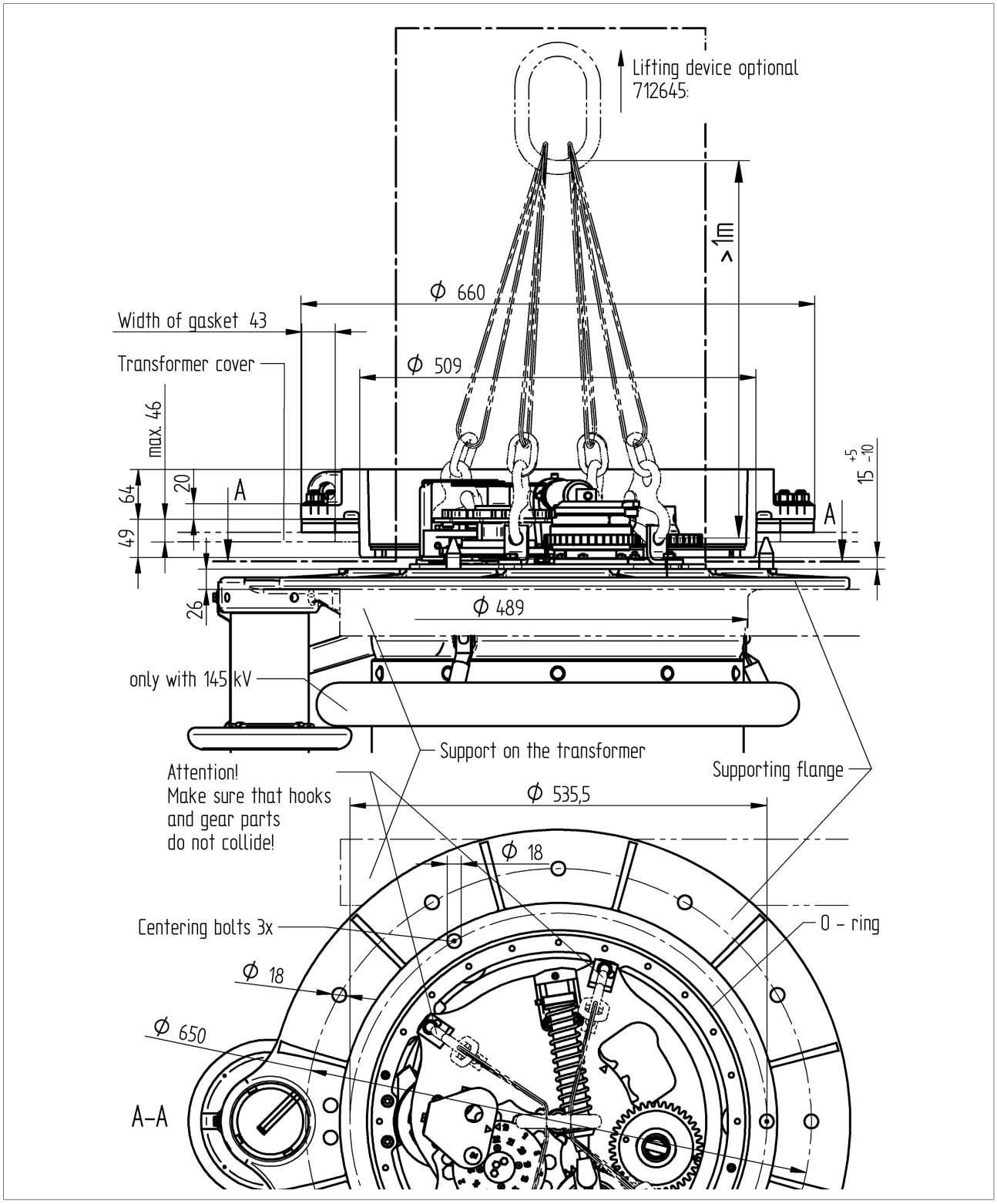

9.10 Position of on-load tap-changer (899409)

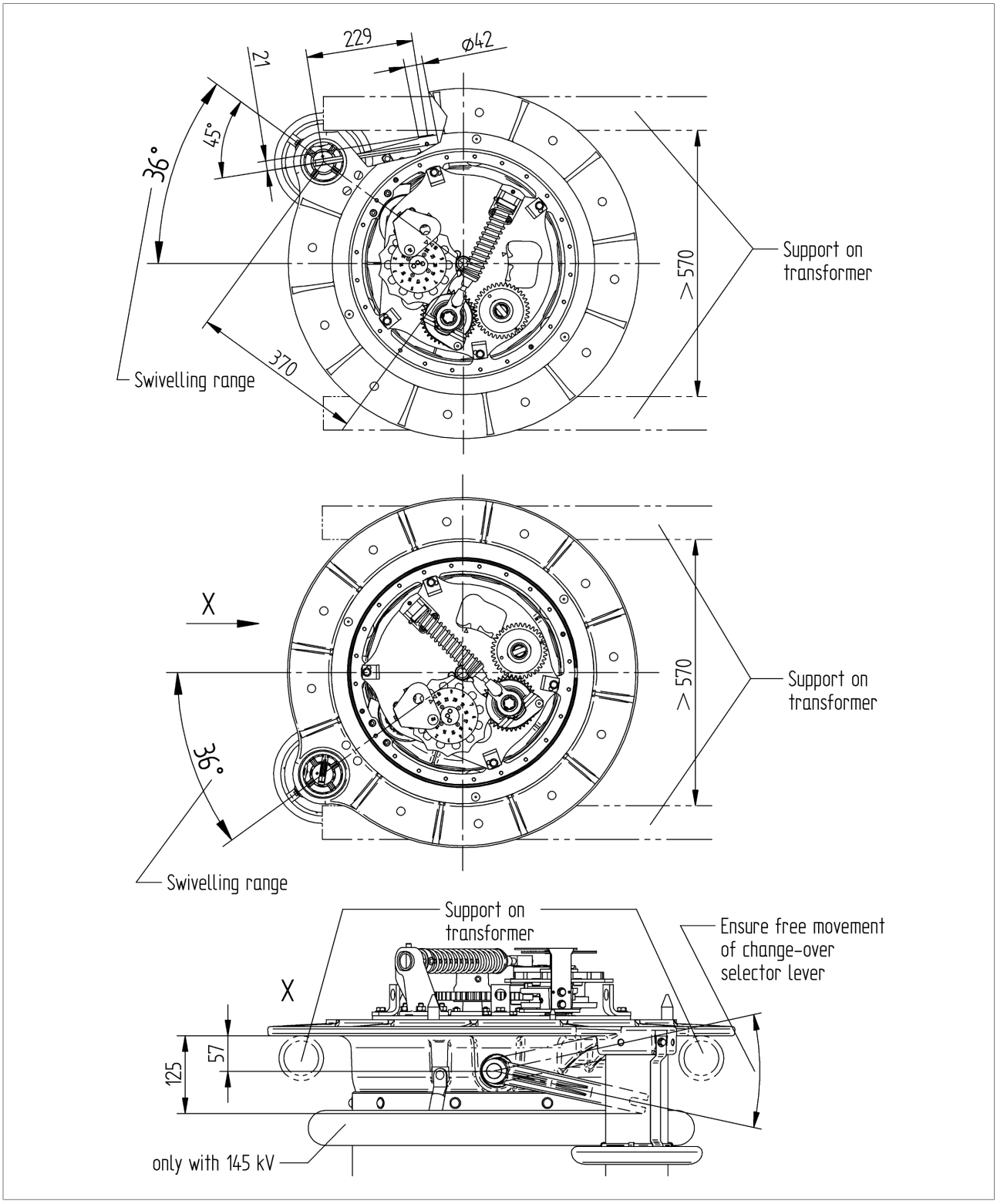

9.11 Position of connection contacts (899051)

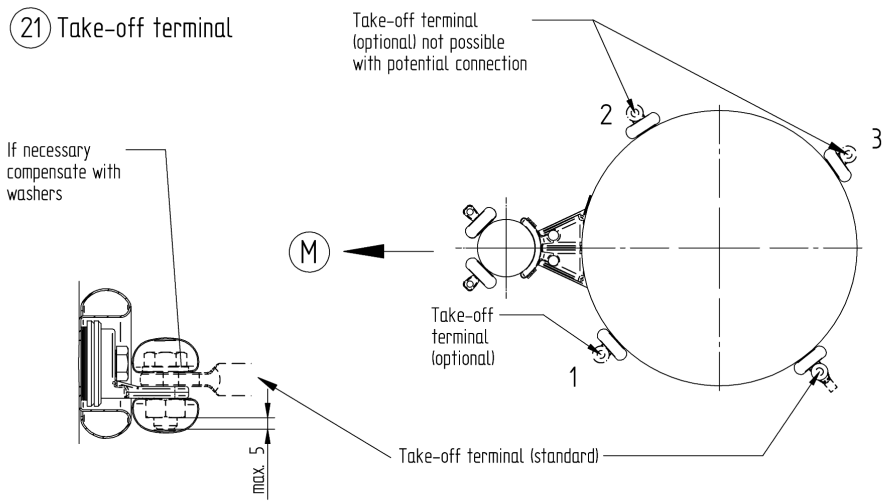

These take-off terminals (with or without take-off leads) are to be fitted with screening caps (included in MR's delivery) by the transformer manufacturer.

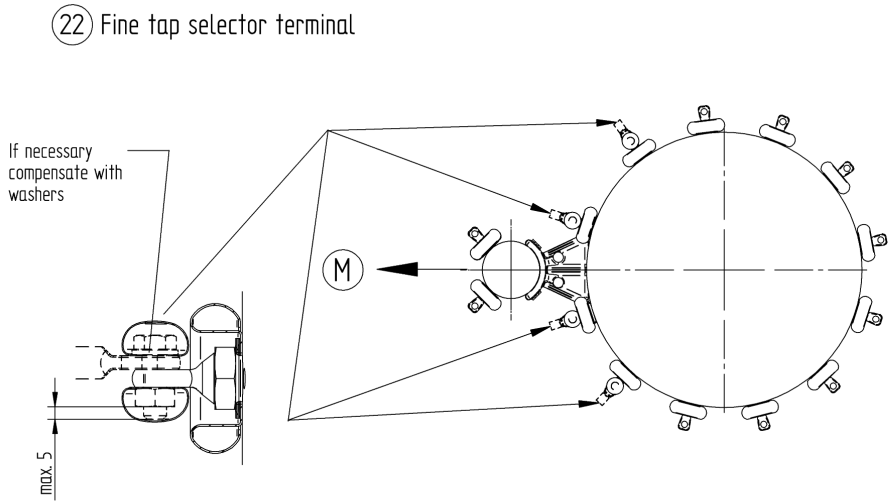

These terminals are to be fitted with screening caps (included in MR's delivery) by the transformer manufacturer.

M = Drive side

The connecting diagram is binding for the designation of the terminals and phases

9.12 Tap-change supervisory control (733469)

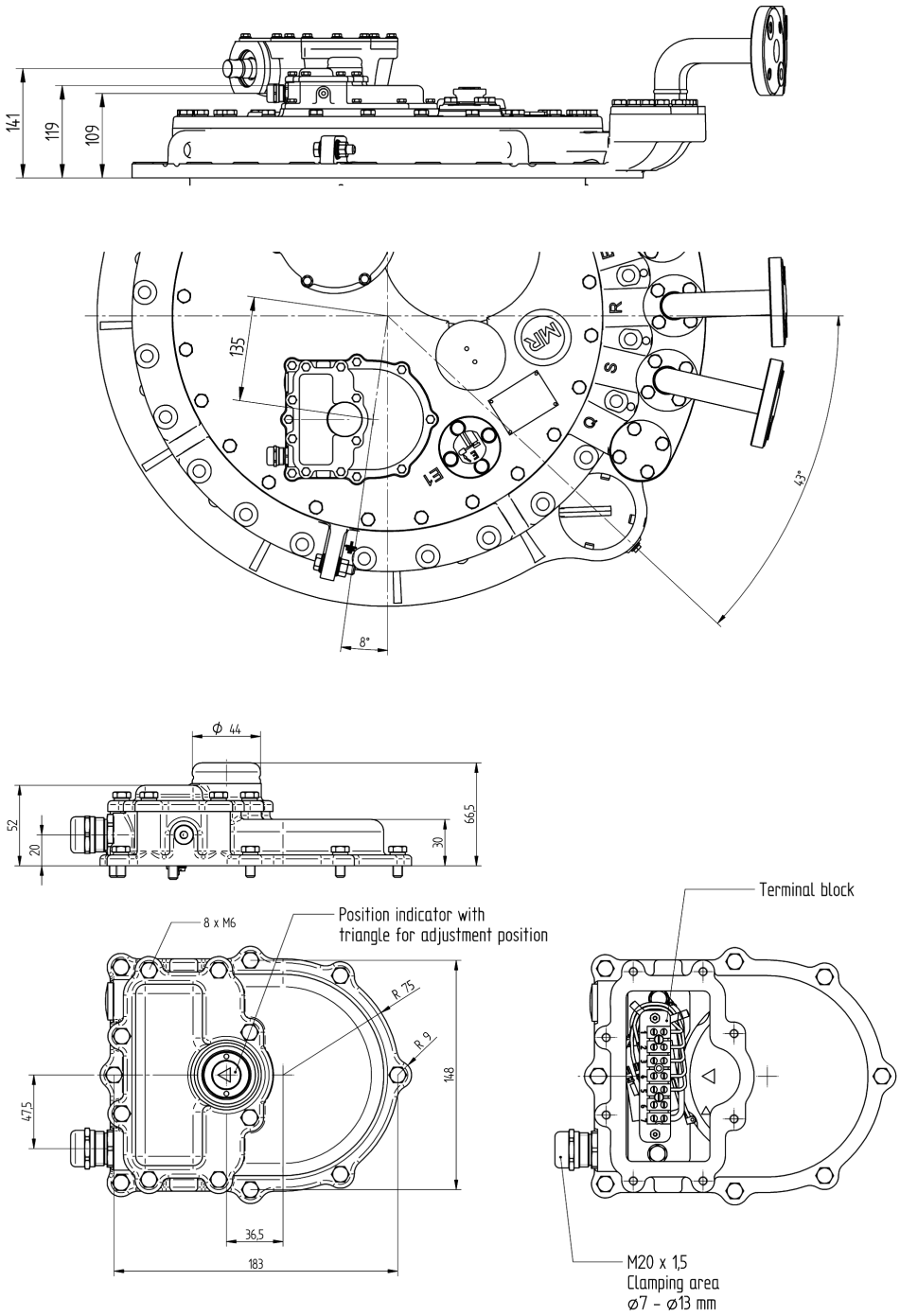

Note:
Take care when when installing the electrical lines so that they do not obstruct the OLTC cover when it is opened for maintenance.

9.13 Bevel gear CD 6400, dimensional drawing (892916)

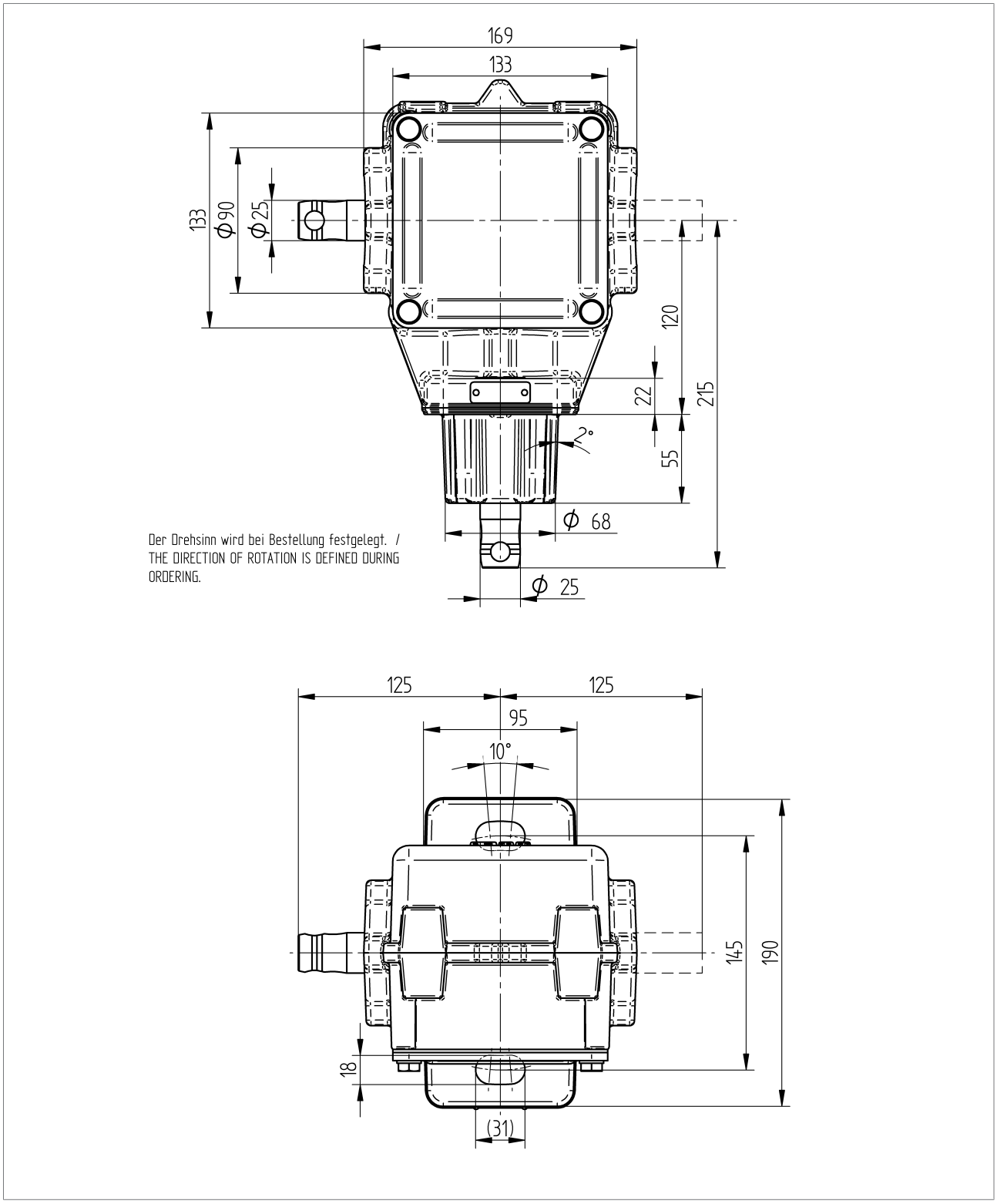

Glossary

DC

Direct current

Dielectric strength

Material-specific property of isolators [kV/2.5 mm]; maximum electrical field strength without a breakdown (arc)

IEC

The International Electrotechnical Commission (IEC for short) is involved in the preparation and publication of international standards for electrical, electronic and related technologies.

IP

Ingress protection

MR

Maschinenfabrik Reinhausen GmbH

NC

Normally Closed contact

NO

Normally Open contact

Maschinenfabrik Reinhausen GmbH
Falkensteinstrasse 8
93059 Regensburg

+49 (0)941 4090-0
sales@reinhausen.com

www.reinhausen.com

4983703/01 EN - VACUTAP® VV-Ex -
- 08/20 - Maschinenfabrik Reinhausen GmbH 2020

THE POWER BEHIND POWER.