MESSKO® MSAFE®
부흐홀쯔 릴레이
기술 데이터

디자인/버전

이 기술 문서에는 제품의 기술적 속성에 대한 세부 정보가 수록되어 있습니다. 주문하려면 “Bestellangabenblatt(문의 및 주문 시방서)” 양식을 사용하십시오. 이 양식은 당사 웹사이트 http://www.reinhausen.com의 각 제품 아래에서 찾을 수 있습니다. MR Reinhausen 고객 포털(https://portal.reinhausen.com)에서 자세한 정보를 확인할 수 있습니다.

부흐홀쯔 릴레이에는 부자식 검조기 2개와 플랩 밸브 1개가 장착되어 있으며 공칭 파이프 지름 DN25, DN50 또는 DN80의 G $1^{1/2"}$ 나사산 연결부 또는 플랜지 연결부와 함께 사용할 수 있습니다.

부흐홀쯔 릴레이에는 최대 4개의 리드형 자석 스위치(NC 접점, NO 접점, CO 접점)을 장착할 수 있으며, 이 스위치는 단자함을 통해 전기적으로 연결할 수 있습니다.

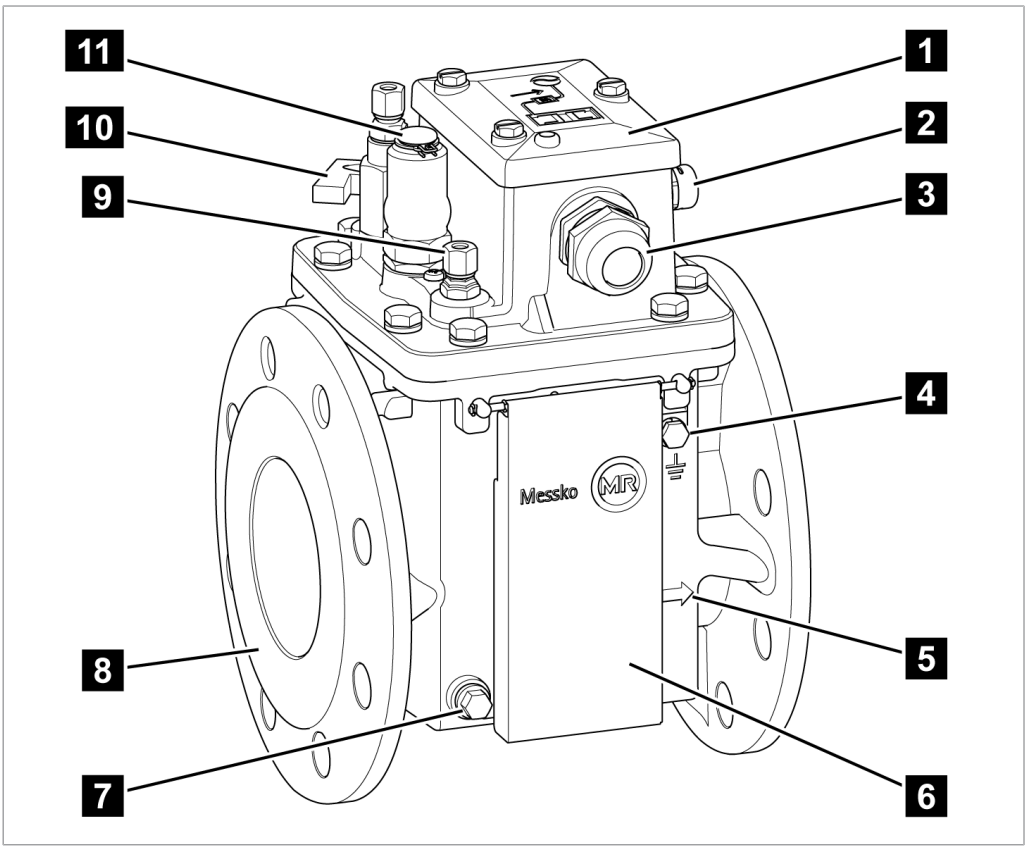

그림 1: 부흐홀쯔 릴레이

1	단자함	2	공기 유출구
3	케이블 글랜드(반대쪽에도 있음)	4	접지 나사
5	설치 위치 표시	6	관측 유리용 커버(옵션)
7	오일 배출 나사(반대쪽에도 있음)	8	플랜지(반대쪽에도 있음)
9	공기압 테스트용 연결부(옵션)	10	가스 추출 밸브
11	커버 슬리브가 있는 테스트 버튼		

Technical data

기본 자재	
하우징/단자함	주조 알루미늄, RAL 7033 또는 7038(ANSI 70 밝은 회색과 유사함), 파우더 코팅. 요청 시 내해수성 버전(해상용) 제공
관측 유리	자외선 필터가 적용된 강화 유리

사양	
설정	실내 및 실외, 열대 내성
주변 기온	−50 °C~+80 °C
보관 온도	−40 °C~+80 °C
작동 온도	−40 °C~+115 °C
절연유 온도	−25 °C~+105 °C(변압기 과부하 작동 시 최고 +115 °C) 요청 시 대체 절연유의 온도 범위
보호 등급	DIN EN 60529에 따른 IP 66
단자함 포함 중량	약 7 kg
파이프 공칭 지름, 플랜지 버전	DN25, DN50, DN80 또는 G 1½" 나사 연결부
플랩 밸브 트리거 압력(광물성 절연유)	DN25: 1 m/s, 1.2 m/s, 1.3 m/s, 1.5 m/s, 2 m/s 또는 2.5 m/s(각 ±15%) DN50: 1 m/s, 1.3 m/s, 1.5 m/s 또는 2 m/s(각 ±15%) DN80: 1 m/s, 1.3 m/s, 1.5 m/s, 2 m/s 또는 2.5 m/s(각 ±15%) 요청 시 DN25, DN50, DN80용으로 3 m/s 제공
과전압 범주	III, 외부 보호: 최대 16 A 소형 차단기, C 특성

리드형 자석 스위치	
번호 및 유형	최대 4개의 N/C 접점, N/O 접점 및 체인지오버 접점 유동적, 기능당 접점 2개
공칭 전압	24~250V AC/DC
최대 스위치 전류 AC/DC	N/C 접점: 2A N/O 접점: 2A 체인지오버 접점: 1A
최소 스위치 전류	50mA=1.2W/24V 4.8mA=1.2W/250V
최대 연속 전류 AC/DC	N/C 접점: 3A N/O 접점: 3A 체인지오버 접점: 2A
최대 AC 스위칭 용량	N/C 접점: 1.2VA~400VA N/O 접점: 1.2VA~400VA 체인지오버 접점: 1.2VA~200VA
최대 DC 스위칭 용량	N/C 접점: 1.2W~250W N/O 접점: 1.2W~250W 체인지오버 접점: 1.2W~150W

리드형 자석 스위치	
정격 절연 전압	2.7kV AC/2초 하우징 접촉, 1kV AC/2초 오픈 접점
절연 저항	1000MΩ/500V DC

단자함	
연결 단자	최소 0.25mm²/최대 4mm²
케이블 글랜드	M25x1.5: 케이블 Ø 13~20mm 또는 ½“ NPT

절연유
▪ IEC 60296 및 ASTM D3487(요청 시 동등한 표준)에 따라 석유 제품[1)]에서 얻은 미사용 절연유 ▪ IEC 60296에 따라 다른 버진 탄화수소 물질에서 얻은 미사용 절연유, 또는 이런 절연유를 IEC 60296 및 ASTM D3487 또는 요청 시 동등한 표준에 따라 석유 제품[1)]과 섞은 혼합물 ▪ 요청 시 천연 및 합성 에스테르 또는 실리콘 오일 같은 대체 절연유 제공 [1)] 여기서 GTL(Gas-to-liquid) 오일은 석유 제품으로 간주됩니다.
최소 밀도 756 kg/m³

기계식 테스트	
진동	2g, 2 h(IEC 60068-2-6)에서 5~35 Hz 및 10~150 Hz
지진 발생	2~10 Hz, 22.5 mm, 1 h(IEC 60068-2-57)
충격	10g, 10 ms(IEC 60068-2-27)
영구 진동 테스트	100 Hz, 200 Hz, 300 Hz, 400 Hz, 1g, 2 h

도면

	DATE	NAME	DOCUMENT NO.	
DFTR.	20.09.2022	KAFFENBERGER	SED 7286610 000 01	
CHKD.	11.10.2022	REHNELT	CHANGE NO.	SCALE
STAND.	11.10.2022	KLEYN	1116559	

© MASCHINENFABRIK REINHAUSEN GMBH 2020
THE REPRODUCTION, DISTRIBUTION AND UTILIZATION OF THIS DOCUMENT AS WELL AS THE COMMUNICATION OF ITS CONTENTS TO OTHERS WITHOUT EXPRESS AUTHORIZATION IS PROHIBITED. OFFENDERS WILL BE HELD LIABLE FOR THE PAYMENT OF DAMAGES. ALL RIGHTS RESERVED IN THE EVENT OF THE GRANT OF A PATENT, UTILITY MODEL OR DESIGN.

DIMENSION IN mm EXCEPT AS NOTED

Maßtabelle / DIMENSION TABLE

Typ / TYPE	DRAWING NO.	d1	d2	d3 = p.c.d.	d4	Φ d5	f	l1	h1	h2
MBR25-6	SED_8922379_000_0x	Φ25/0.98''	Φ100/3.94''	Φ75/2.95''	Φ60/2.36''	4x 12/0.47''	12,5/0.49''	185/7.28''	244/9.61''	107/4.21''
MBR25-16	SED_7265391_000_0x	Φ25/0.98''	Φ115/4.53''	Φ85/3.35''	Φ68/2.68''	4x 14/0.55''	20/0.78''	200/7.87''	244/9.61''	107/4.21''
MBR25-G	SED_7264657_000-0x	Φ25/0.98''	-	-	G1 1/2''	-	14,5/0.57''	185/7.28''	244/9.61''	107/4.21''
MBR50-6/4	SED_7274429_000_0x	Φ50/1.97''	Φ140/5.51''	Φ110/4.33''	Φ90/3.54''	4x 14/0.55''	19/0.75''	185/7.28''	244/9.61''	95/3.74''
MBR50-16/4	SED_8950186_000_0x	Φ50/1.97''	Φ165/6.50''	Φ125/4.92''	Φ102/4.02''	4x 18/0,71''	19/0.75''	195/7.68''	244/9.61''	95/3.74''
MBR50-6/6	SED_7275602_000_0x	Φ50/1.97''	Φ140/5.51''	Φ110/4.33''	(Φ140/5,51'')	6x 12/0.47	14/0.55''	185/7.28''	244/9.61''	95/3.74''
MBR80-6/4	SED_8950862_000_0x	Φ80/3.15''	Φ190/7.48''	Φ150/5.91''	Φ130/5.12''	4x 18/0.71''	15/0.55''	195/7.68''	244/9.61''	95/3.74''
MBR80-6/6	SED_7283480_000_0x	Φ80/3.15''	Φ160/6.30''	Φ130/6,29''	(Φ160/6.30'')	6x 12/0,47''	14/0.55''	185/7.28''	244/9.61''	95/3.74''
MBR80-16/4	SED_7286211_000_0x	Φ80/3.15''	Φ200/7.87''	Φ160/6.29''	Φ138/5.45''	4x 18/0.71''	15,5/0.61''	195/7.68''	244/9.61''	95/3.74''
MBR80-16/8	SED_7280977_000_0x	Φ80/3,15''	Φ200/7.87''	Φ160/6.29''	Φ138/5.45''	2x M16 6x 18/0.71''	15,5/0,61''	195/7.68''	244/9.61''	95/3.74''
MBR80-CH	SED_7283859_000_0x	Φ80/3.15''	□160/6.30''	Φ160/6.30''	(□160/6.30'')	4x 18/0,71''	16/0.63''	185/7.28''	244/9.61''	95/3.74''
MBR80-QU	SED_7284134_000_0x	Φ80/3.15''	□125/4.92''	Φ132/5.20''	(□125/4.92'')	4x 18/0,71''	21/0.83''	200/7.87''	244/9.61''	95/3.74''

TRANSFORMER ACCESSORIES
DIMENSION TABLE
MSAFE-BUCHHOLZ RELAY

SERIAL NUMBER
-
MATERIAL NUMBER
10129319 0M
SHEET
1/1

	DATE	NAME	DOCUMENT NO.	
DFTR.	20.09.2022	KAFFENBERGER	SED 8922379 000 00	
CHKD.	11.10.2022	REHNELT	CHANGE NO.	SCALE
STAND.	11.10.2022	KLEYN	1116559	1:2

MASCHINENFABRIK REINHAUSEN GMBH COPYRIGHT RESERVED
Weitergabe sowie Vervielfältigung dieses Dokuments, Verwertung und Mitteilung seines Inhaltes sind verboten, soweit nicht ausdrücklich gestattet.
Zuwiderhandlungen verpflichten zu Schadenersatz. Alle Rechte für den Fall der Patent-, Gebrauchsmuster- oder Designeintragung vorbehalten.

DIMENSION IN mm EXCEPT AS NOTED

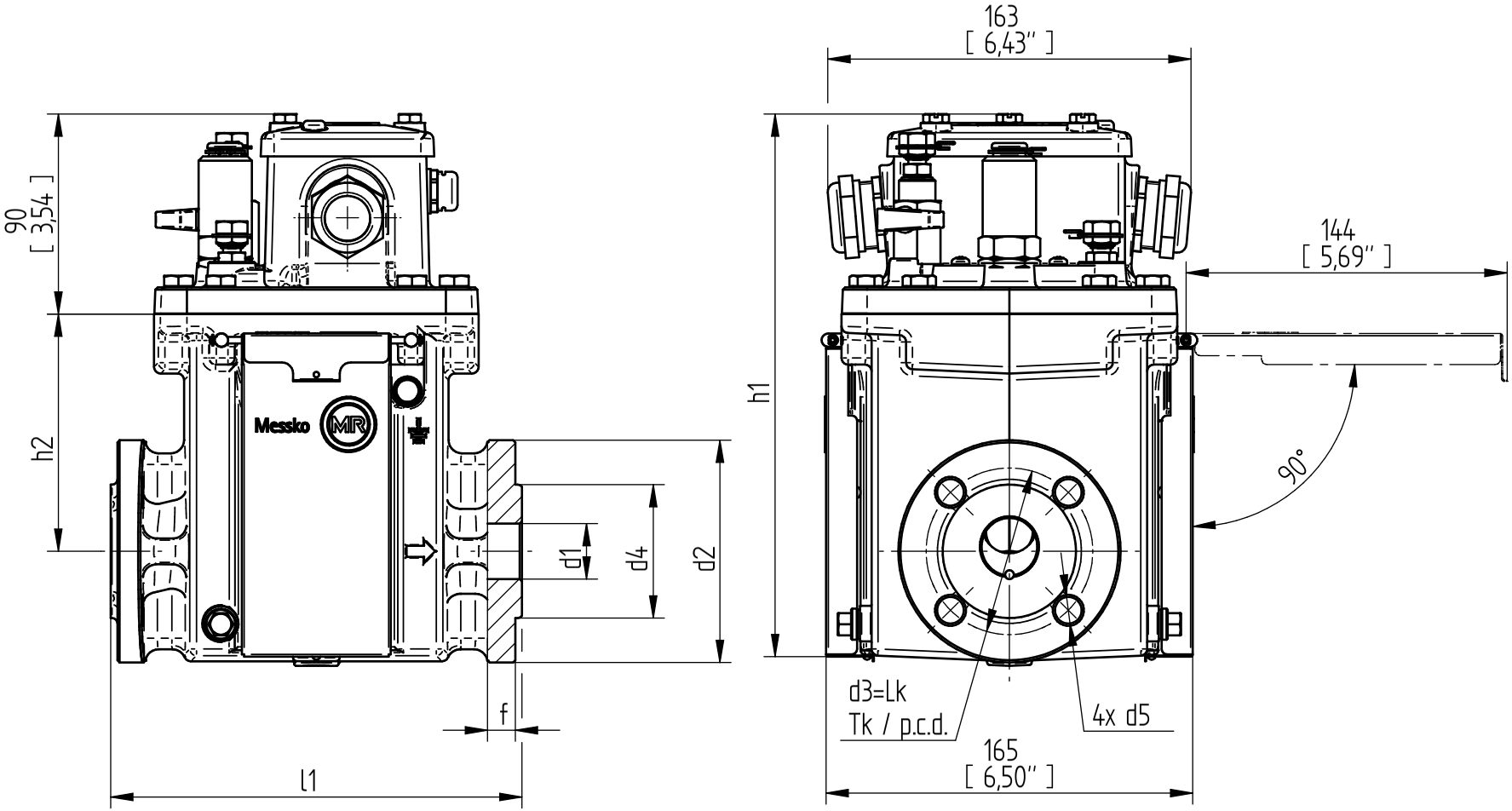

TRANSFORMER ACCESSORIES
MSAFE-BUCHHOLZ RELAY
MBR25-6

SERIAL NUMBER
-

MATERIAL NUMBER
101716580M

SHEET
1/ 1

	DATE	NAME	DOCUMENT NO.	
DFTR.	20.09.2022	KAFFENBERGER	SED 7265391 000 01	
CHKD.	11.10.2022	REHNELT	CHANGE NO.	SCALE
STAND.	11.10.2022	KLEYN	1116559	1:2

© MASCHINENFABRIK REINHAUSEN GMBH 2020
THE REPRODUCTION, DISTRIBUTION AND UTILIZATION OF THIS DOCUMENT AS WELL AS THE COMMUNICATION OF ITS CONTENTS TO OTHERS WITHOUT EXPRESS AUTHORIZATION IS PROHIBITED. OFFENDERS WILL BE HELD LIABLE FOR THE PAYMENT OF DAMAGES. ALL RIGHTS RESERVED IN THE EVENT OF THE GRANT OF A PATENT, UTILITY MODEL OR DESIGN.

DIMENSION IN mm EXCEPT AS NOTED

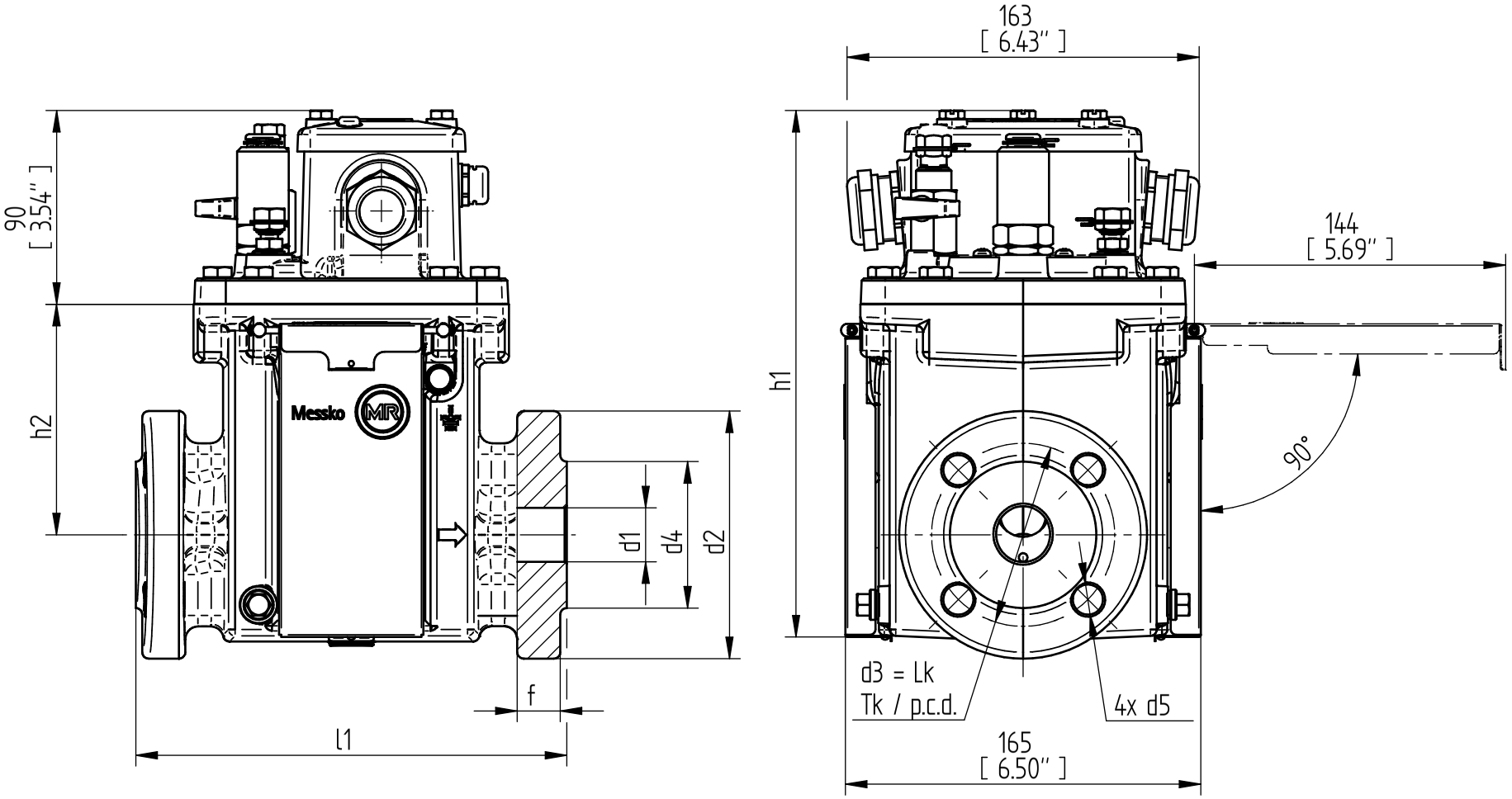

TRANSFORMER ACCESSORIES
MSAFE-BUCHHOLZ RELAY
MBR25-16

SERIAL NUMBER
-

MATERIAL NUMBER
101289500M

SHEET
1/ 1

	DATE	NAME	DOCUMENT NO.	
DFTR.	20.09.2022	KAFFENBERGER	SED 7264657 000 01	
CHKD.	11.10.2022	REHNELT	CHANGE NO.	SCALE
STAND.	11.10.2022	KLEYN	1116559	1:2

© MASCHINENFABRIK REINHAUSEN GMBH 2020
THE REPRODUCTION, DISTRIBUTION AND UTILIZATION OF THIS DOCUMENT AS WELL AS THE COMMUNICATION OF ITS CONTENTS TO OTHERS WITHOUT EXPRESS AUTHORIZATION IS PROHIBITED. OFFENDERS WILL BE HELD LIABLE FOR THE PAYMENT OF DAMAGES. ALL RIGHTS RESERVED IN THE EVENT OF THE GRANT OF A PATENT, UTILITY MODEL OR DESIGN.

DIMENSION IN mm EXCEPT AS NOTED

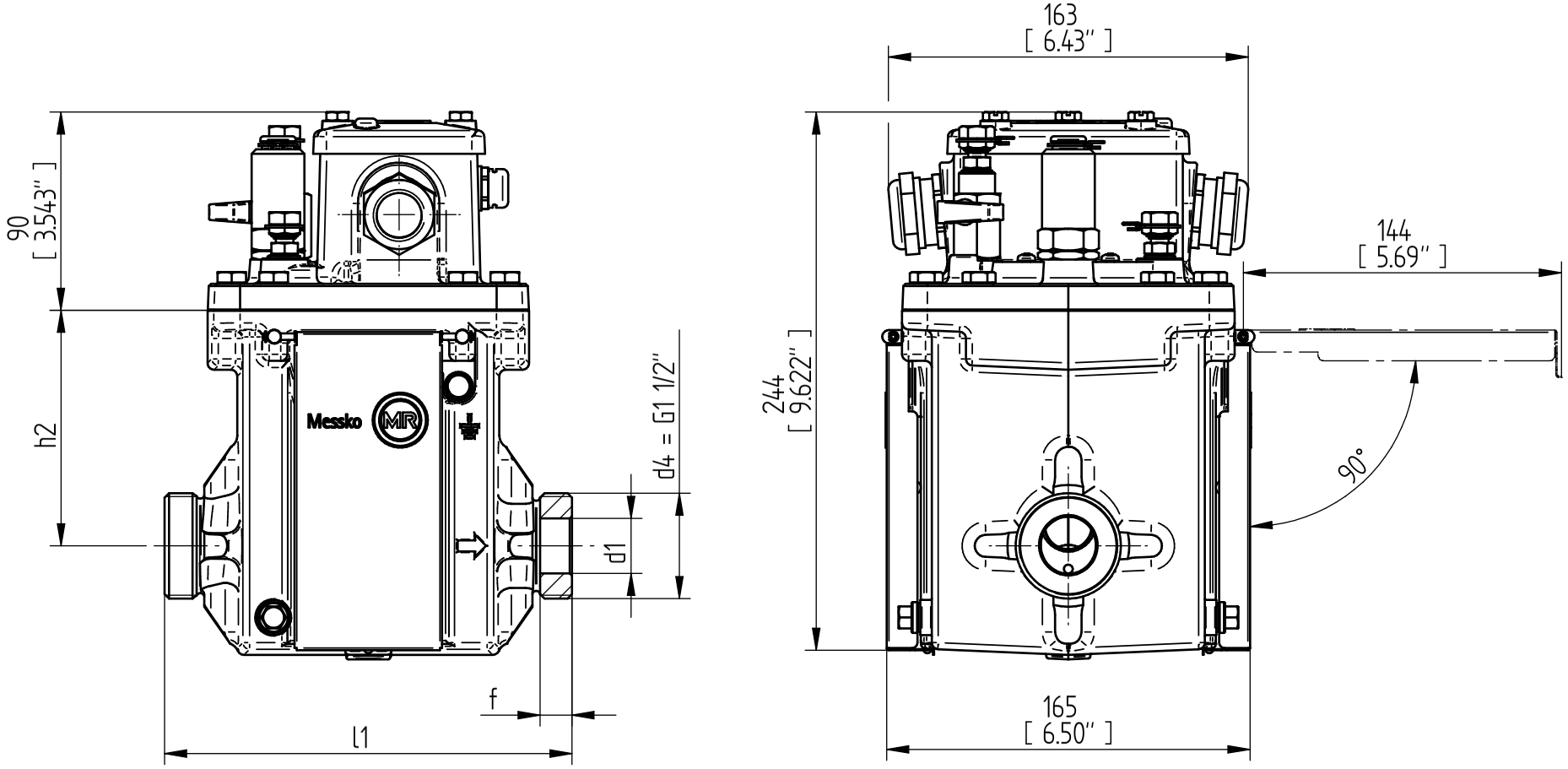

TRANSFORMER ACCESSORIES
MSAFE-BUCHHOLZ RELAY
MBR25-G

SERIAL NUMBER
-

MATERIAL NUMBER
10128969 0M

SHEET
1/ 1

	DATE	NAME	DOCUMENT NO.	
DFTR.	20.09.2022	KAFFENBERGER	SED 7274429 000 01	
CHKD.	11.10.2022	REHNELT	CHANGE NO.	SCALE
STAND.	11.10.2022	KLEYN	1116559	1:2

© MASCHINENFABRIK REINHAUSEN GMBH 2020
THE REPRODUCTION, DISTRIBUTION AND UTILIZATION OF THIS DOCUMENT AS WELL AS THE COMMUNICATION OF ITS CONTENTS TO OTHERS WITHOUT EXPRESS AUTHORIZATION IS PROHIBITED. OFFENDERS WILL BE HELD LIABLE FOR THE PAYMENT OF DAMAGES. ALL RIGHTS RESERVED IN THE EVENT OF THE GRANT OF A PATENT, UTILITY MODEL OR DESIGN.

DIMENSION IN mm EXCEPT AS NOTED

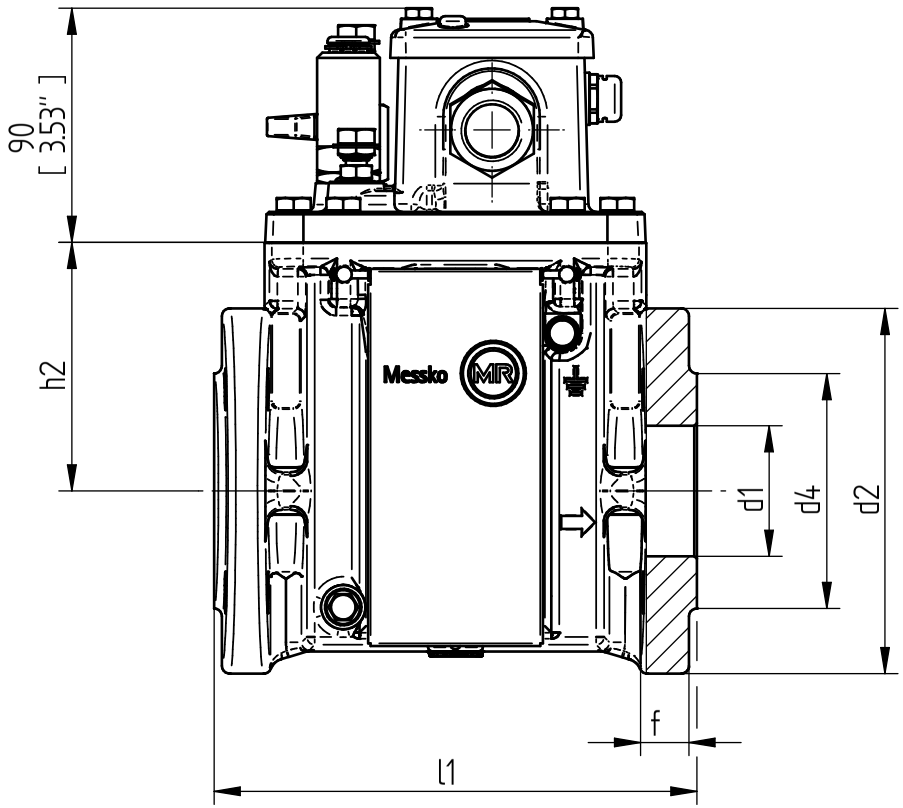

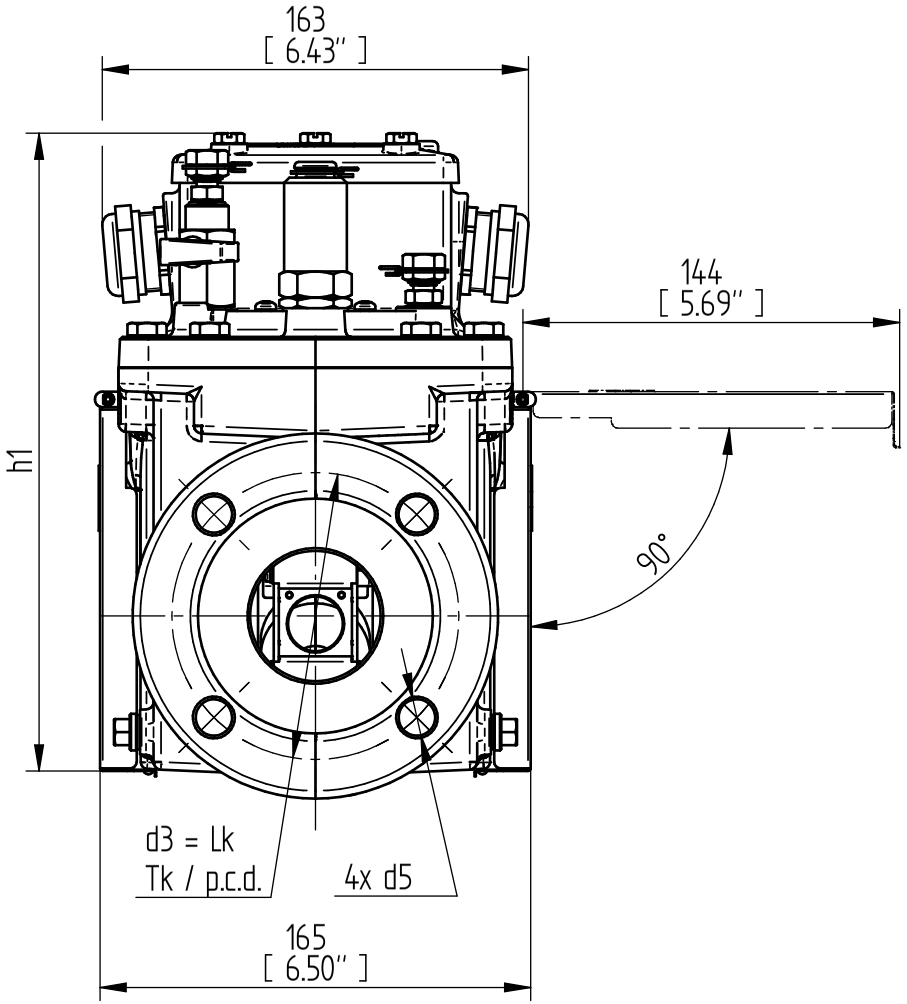

TRANSFORMER ACCESSORIES
MSAFE-BUCHHOLZ RELAY
MBR50-6/4

SERIAL NUMBER
-

MATERIAL NUMBER
101291380M

SHEET
1/ 1

	DATE	NAME	DOCUMENT NO.	
DFTR.	20.09.2022	KAFFENBERGER	SED 8950186 000 00	
CHKD.	11.10.2022	REHNELT	CHANGE NO.	SCALE
STAND.	11.10.2022	KLEYN	1116559	1:2

© MASCHINENFABRIK REINHAUSEN GMBH 2020
THE REPRODUCTION, DISTRIBUTION AND UTILIZATION OF THIS DOCUMENT AS WELL AS THE COMMUNICATION OF ITS CONTENTS TO OTHERS WITHOUT EXPRESS AUTHORIZATION IS PROHIBITED. OFFENDERS WILL BE HELD LIABLE FOR THE PAYMENT OF DAMAGES. ALL RIGHTS RESERVED IN THE EVENT OF THE GRANT OF A PATENT, UTILITY MODEL OR DESIGN.

DIMENSION IN mm EXCEPT AS NOTED

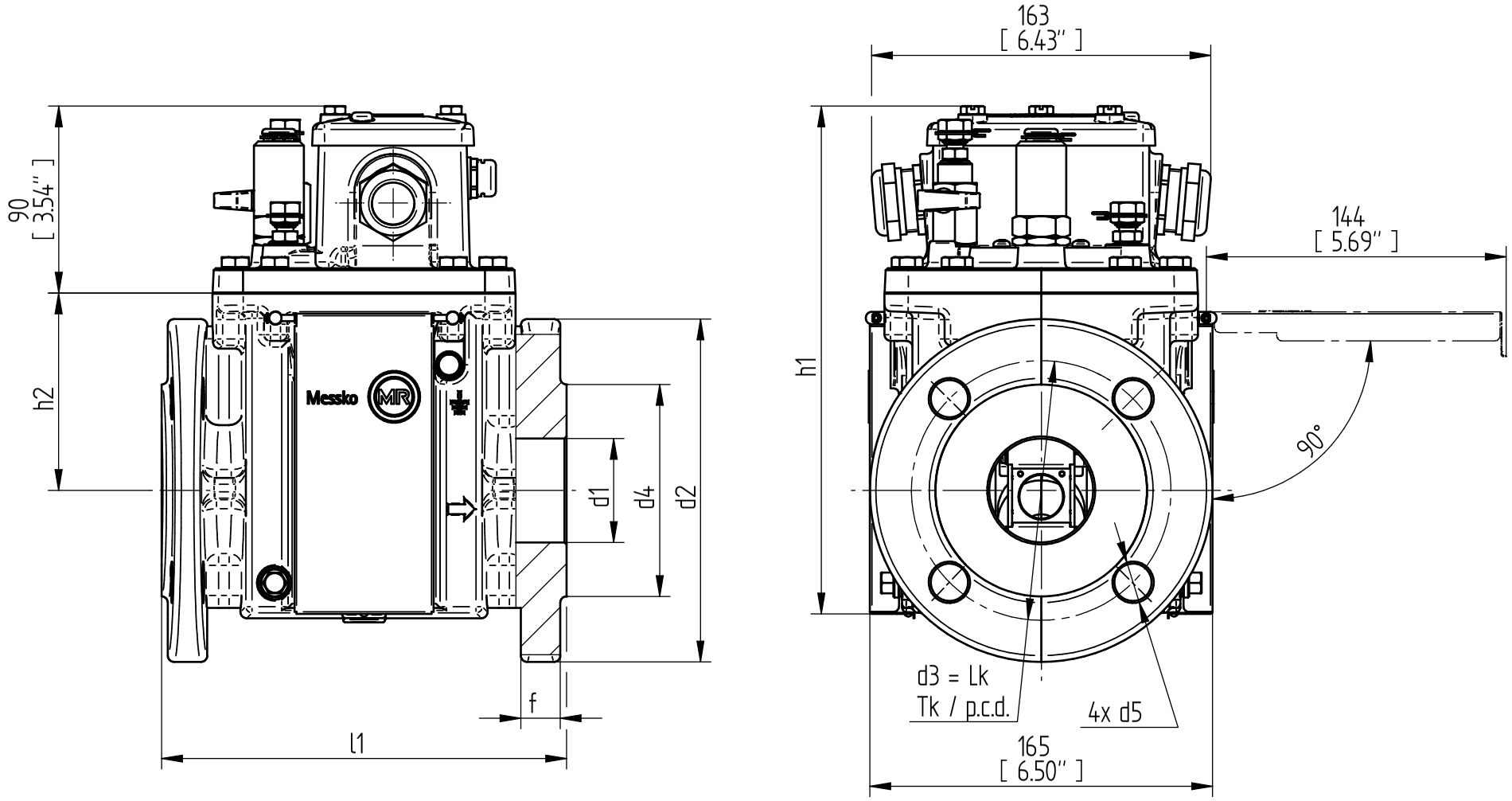

TRANSFORMER ACCESSORIES
MSAFE-BUCHHOLZ RELAY
MBR50-16/4

MATERIAL NUMBER	SHEET
101718390M	1/ 1

SERIAL NUMBER
-

	DATE	NAME	DOCUMENT NO.	
DFTR.	20.09.2022	KAFFENBERGER	SED 7275602 000 01	
CHKD.	11.10.2022	REHNELT	CHANGE NO.	SCALE
STAND.	11.10.2022	KLEYN	1116559	1:2

© MASCHINENFABRIK REINHAUSEN GMBH 2020
THE REPRODUCTION, DISTRIBUTION AND UTILIZATION OF THIS DOCUMENT AS WELL AS THE COMMUNICATION OF ITS CONTENTS TO OTHERS WITHOUT EXPRESS AUTHORIZATION IS PROHIBITED. OFFENDERS WILL BE HELD LIABLE FOR THE PAYMENT OF DAMAGES. ALL RIGHTS RESERVED IN THE EVENT OF THE GRANT OF A PATENT, UTILITY MODEL OR DESIGN.

DIMENSION IN mm EXCEPT AS NOTED

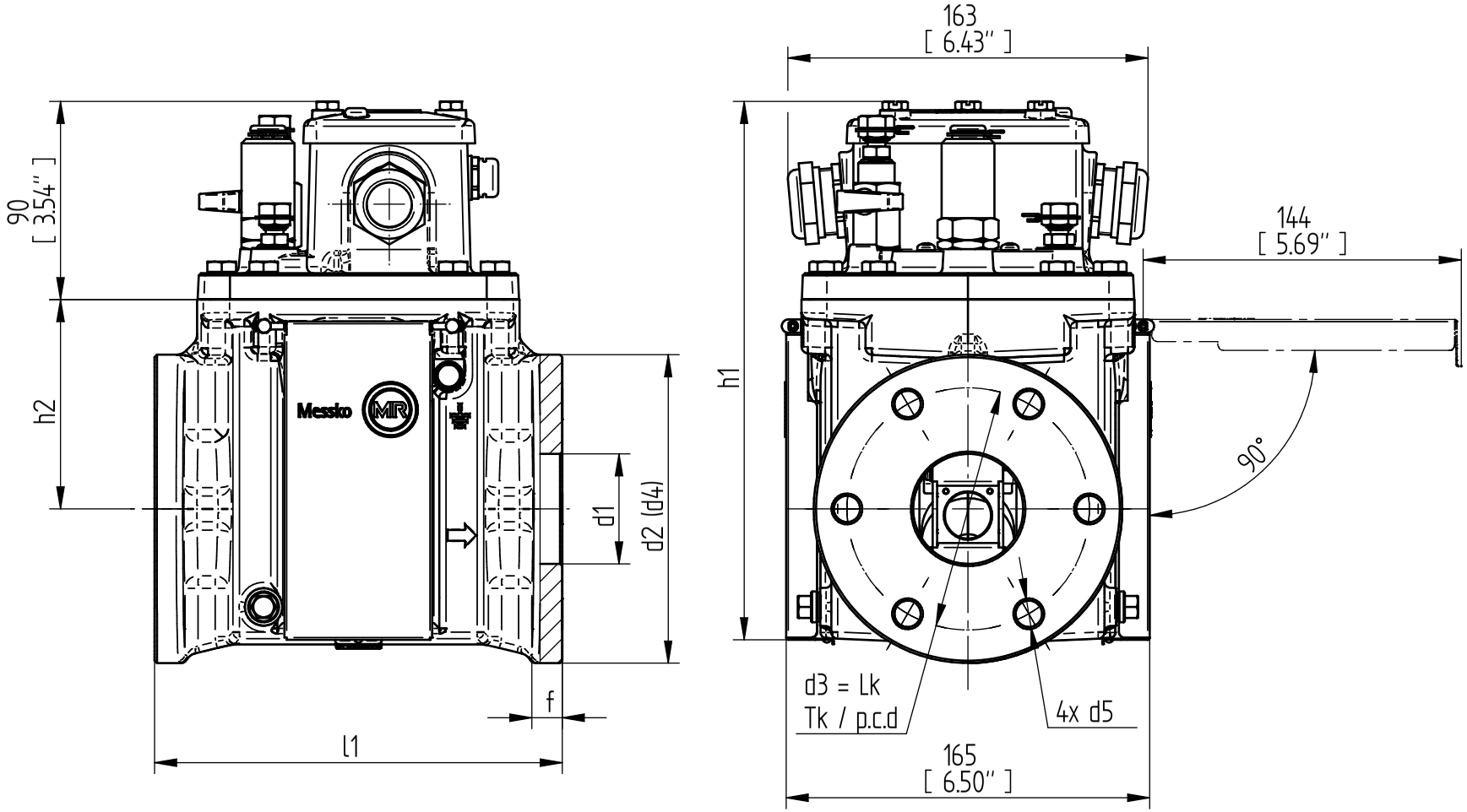

TRANSFORMER ACCESSORIES
MSAFE-BUCHHOLZ RELAY
MBR50-6/6

SERIAL NUMBER
-

MATERIAL NUMBER
1012915 70M

SHEET
1/ 1

	DATE	NAME	DOCUMENT NO.	
DFTR.	20.09.2022	KAFFENBERGER	SED 8950862 000 00	
CHKD.	11.10.2022	REHNELT	CHANGE NO.	SCALE
STAND.	11.10.2022	KLEYN	1116559	1:2

© MASCHINENFABRIK REINHAUSEN GMBH 2020
THE REPRODUCTION, DISTRIBUTION AND UTILIZATION OF THIS DOCUMENT AS WELL AS THE COMMUNICATION OF ITS CONTENTS TO OTHERS WITHOUT EXPRESS AUTHORIZATION IS PROHIBITED. OFFENDERS WILL BE HELD LIABLE FOR THE PAYMENT OF DAMAGES. ALL RIGHTS RESERVED IN THE EVENT OF THE GRANT OF A PATENT, UTILITY MODEL OR DESIGN.

DIMENSION IN mm EXCEPT AS NOTED

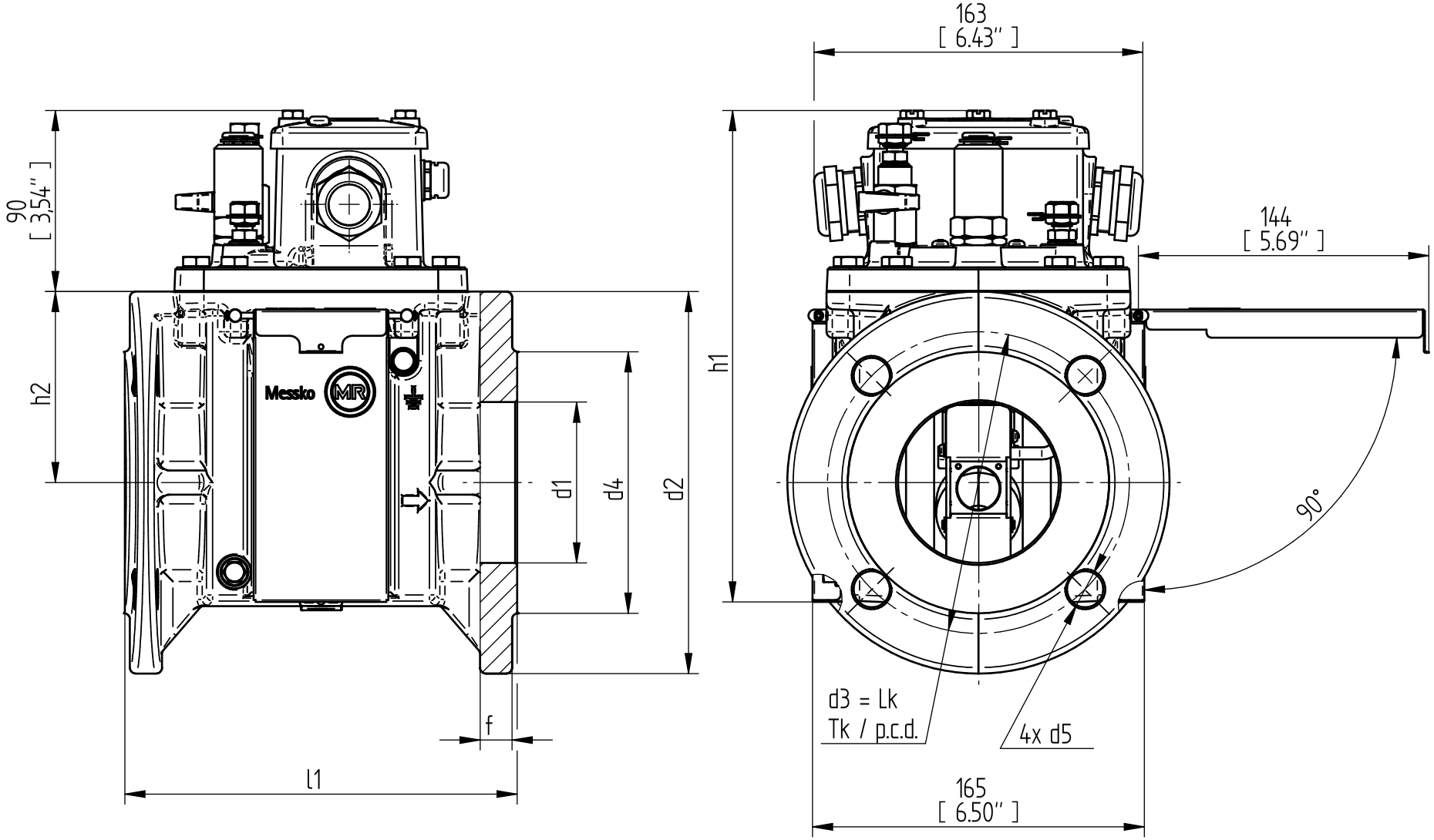

TRANSFORMER ACCESSORIES
MSAFE-BUCHHOLZ RELAY
MBR80-6/4

SERIAL NUMBER
-

MATERIAL NUMBER
101719230M

SHEET
1/ 1

	DATE	NAME	DOCUMENT NO.	
DFTR.	20.09.2022	KAFFENBERGER	SED 7283480 000 01	
CHKD.	11.10.2022	REHNELT	CHANGE NO.	SCALE
STAND.	11.10.2022	KLEYN	1116559	1:2

© MASCHINENFABRIK REINHAUSEN GMBH 2020
THE REPRODUCTION, DISTRIBUTION AND UTILIZATION OF THIS DOCUMENT AS WELL AS THE COMMUNICATION OF ITS CONTENTS TO OTHERS WITHOUT EXPRESS AUTHORIZATION IS PROHIBITED. OFFENDERS WILL BE HELD LIABLE FOR THE PAYMENT OF DAMAGES. ALL RIGHTS RESERVED IN THE EVENT OF THE GRANT OF A PATENT, UTILITY MODEL OR DESIGN.

DIMENSION IN mm EXCEPT AS NOTED

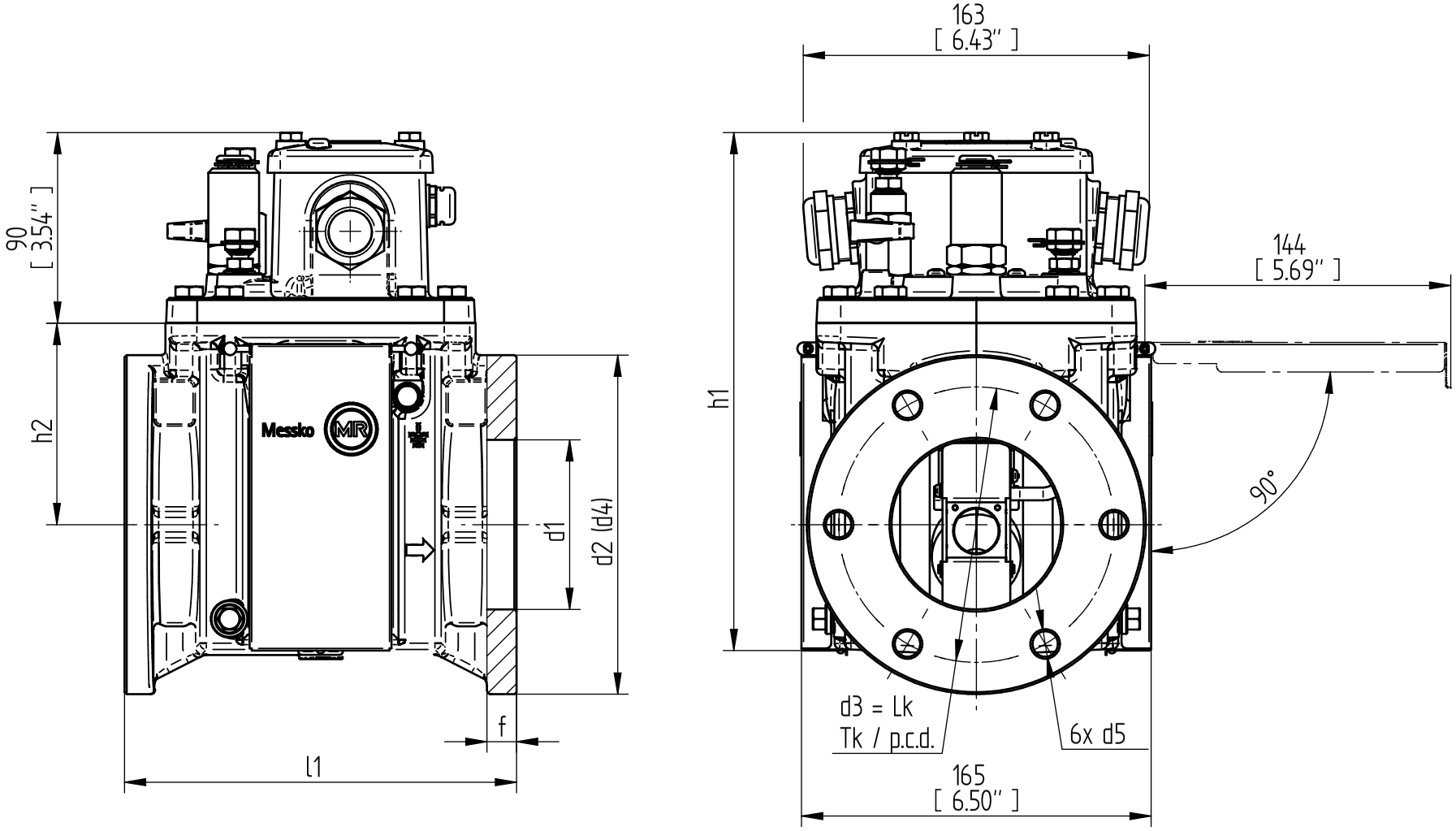

TRANSFORMER ACCESSORIES
MSAFE-BUCHHOLZ RELAY
MBR80-6/6

SERIAL NUMBER
-

MATERIAL NUMBER
1012925 70M

SHEET
1/ 1

	DATE	NAME	DOCUMENT NO.	
DFTR.	20.09.2022	KAFFENBERGER	SED 7286211 000 01	
CHKD.	11.10.2022	REHNELT	CHANGE NO.	SCALE
STAND.	11.10.2022	KLEYN	1116559	1:2

© MASCHINENFABRIK REINHAUSEN GMBH 2020
THE REPRODUCTION, DISTRIBUTION AND UTILIZATION OF THIS DOCUMENT AS WELL AS THE COMMUNICATION OF ITS CONTENTS TO OTHERS WITHOUT EXPRESS AUTHORIZATION IS PROHIBITED. OFFENDERS WILL BE HELD LIABLE FOR THE PAYMENT OF DAMAGES. ALL RIGHTS RESERVED IN THE EVENT OF THE GRANT OF A PATENT, UTILITY MODEL OR DESIGN.

DIMENSION IN mm EXCEPT AS NOTED

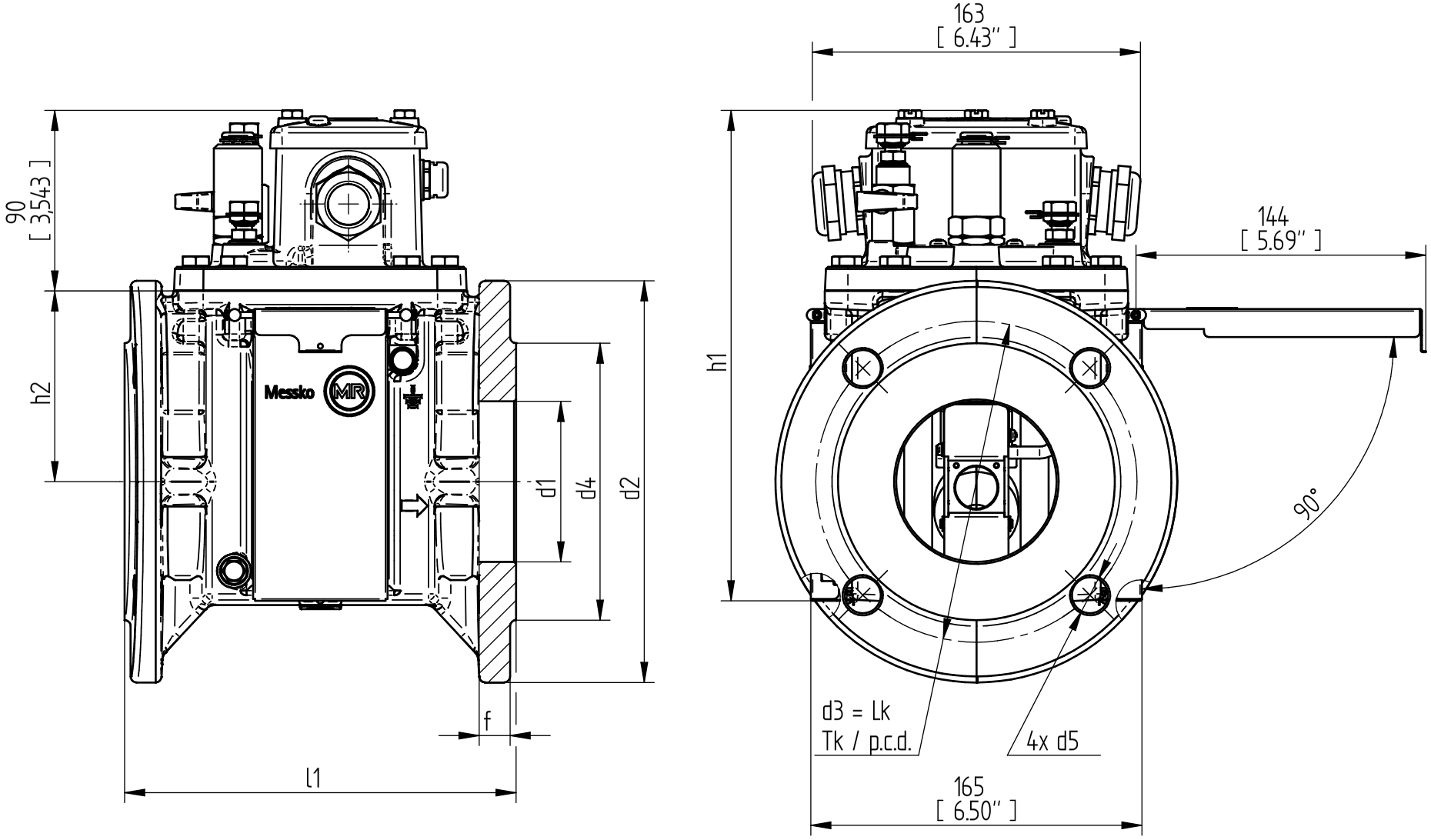

TRANSFORMER ACCESSORIES
MSAFE-BUCHHOLZ RELAY
MBR80-16/4

SERIAL NUMBER
-

MATERIAL NUMBER
101292990M

SHEET
1/ 1

	DATE	NAME	DOCUMENT NO.	
DFTR.	20.09.2022	KAFFENBERGER	SED 7280977 000 01	
CHKD.	11.10.2022	REHNELT	CHANGE NO.	SCALE
STAND.	11.10.2022	KLEYN	1116559	1:2

© MASCHINENFABRIK REINHAUSEN GMBH 2020
THE REPRODUCTION, DISTRIBUTION AND UTILIZATION OF THIS DOCUMENT AS WELL AS THE COMMUNICATION OF ITS CONTENTS TO OTHERS WITHOUT EXPRESS AUTHORIZATION IS PROHIBITED. OFFENDERS WILL BE HELD LIABLE FOR THE PAYMENT OF DAMAGES. ALL RIGHTS RESERVED IN THE EVENT OF THE GRANT OF A PATENT, UTILITY MODEL OR DESIGN.

DIMENSION IN mm EXCEPT AS NOTED

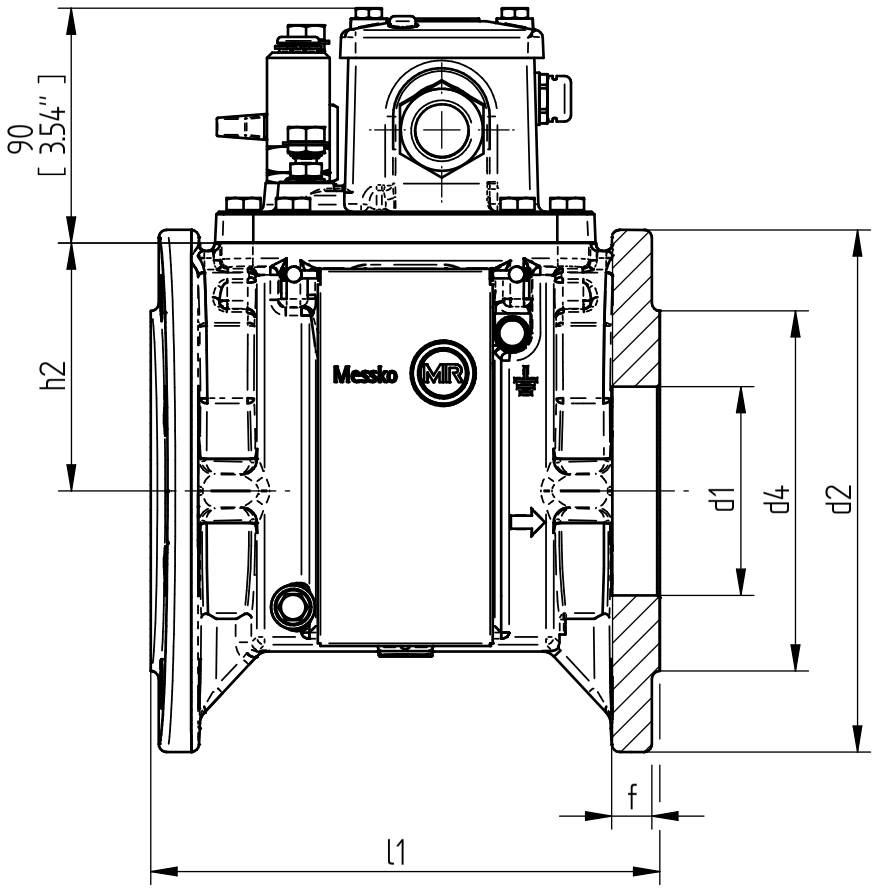

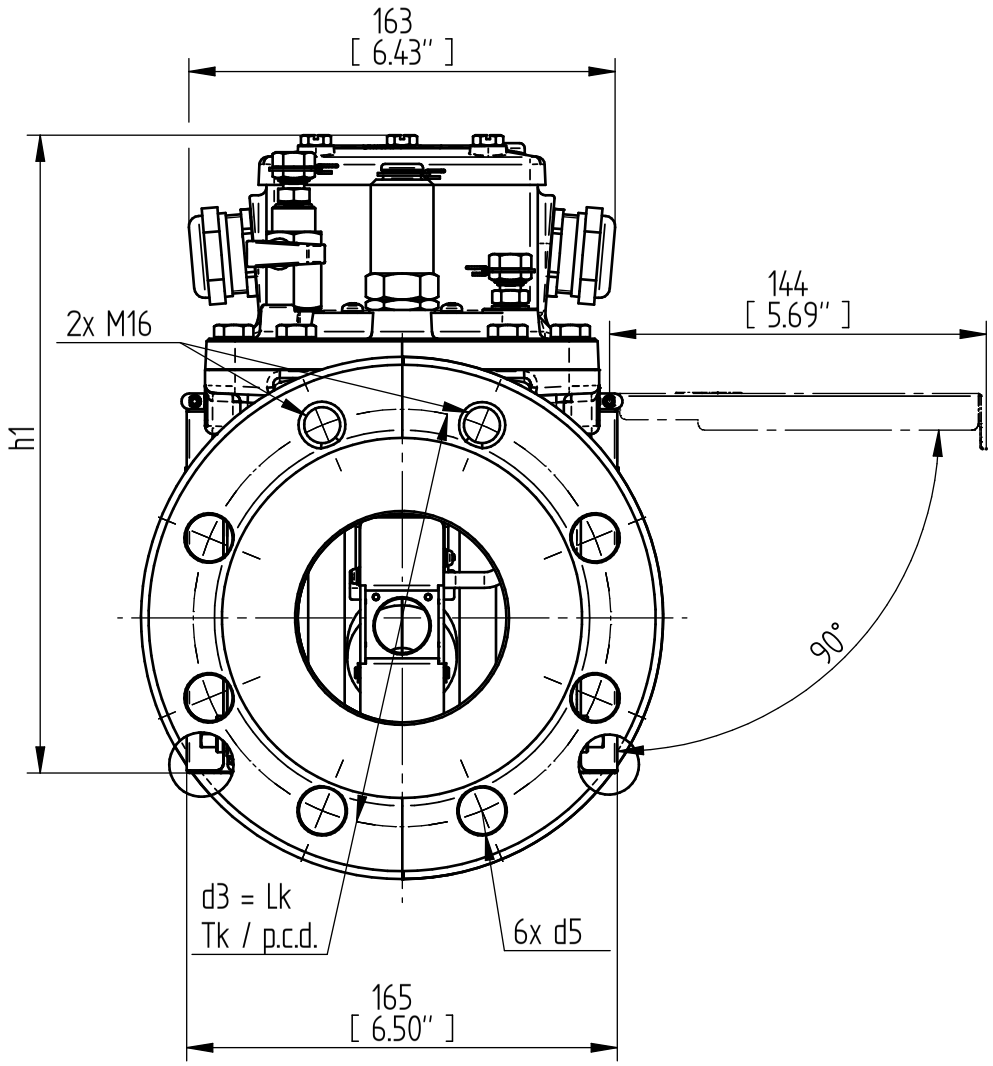

TRANSFORMER ACCESSORIES
MSAFE-BUCHHOLZ RELAY
MBR80 -16/8

SERIAL NUMBER
-

MATERIAL NUMBER
10129234 0M

SHEET
1/ 1

	DATE	NAME	DOCUMENT NO.	
DFTR.	20.09.2022	KAFFENBERGER	SED 7283859 000 01	
CHKD.	11.10.2022	REHNELT	CHANGE NO.	SCALE
STAND.	11.10.2022	KLEYN	1116559	1:2

© MASCHINENFABRIK REINHAUSEN GMBH 2020
THE REPRODUCTION, DISTRIBUTION AND UTILIZATION OF THIS DOCUMENT AS WELL AS THE COMMUNICATION OF ITS CONTENTS TO OTHERS WITHOUT EXPRESS AUTHORIZATION IS PROHIBITED. OFFENDERS WILL BE HELD LIABLE FOR THE PAYMENT OF DAMAGES. ALL RIGHTS RESERVED IN THE EVENT OF THE GRANT OF A PATENT, UTILITY MODEL OR DESIGN.

DIMENSION IN mm EXCEPT AS NOTED

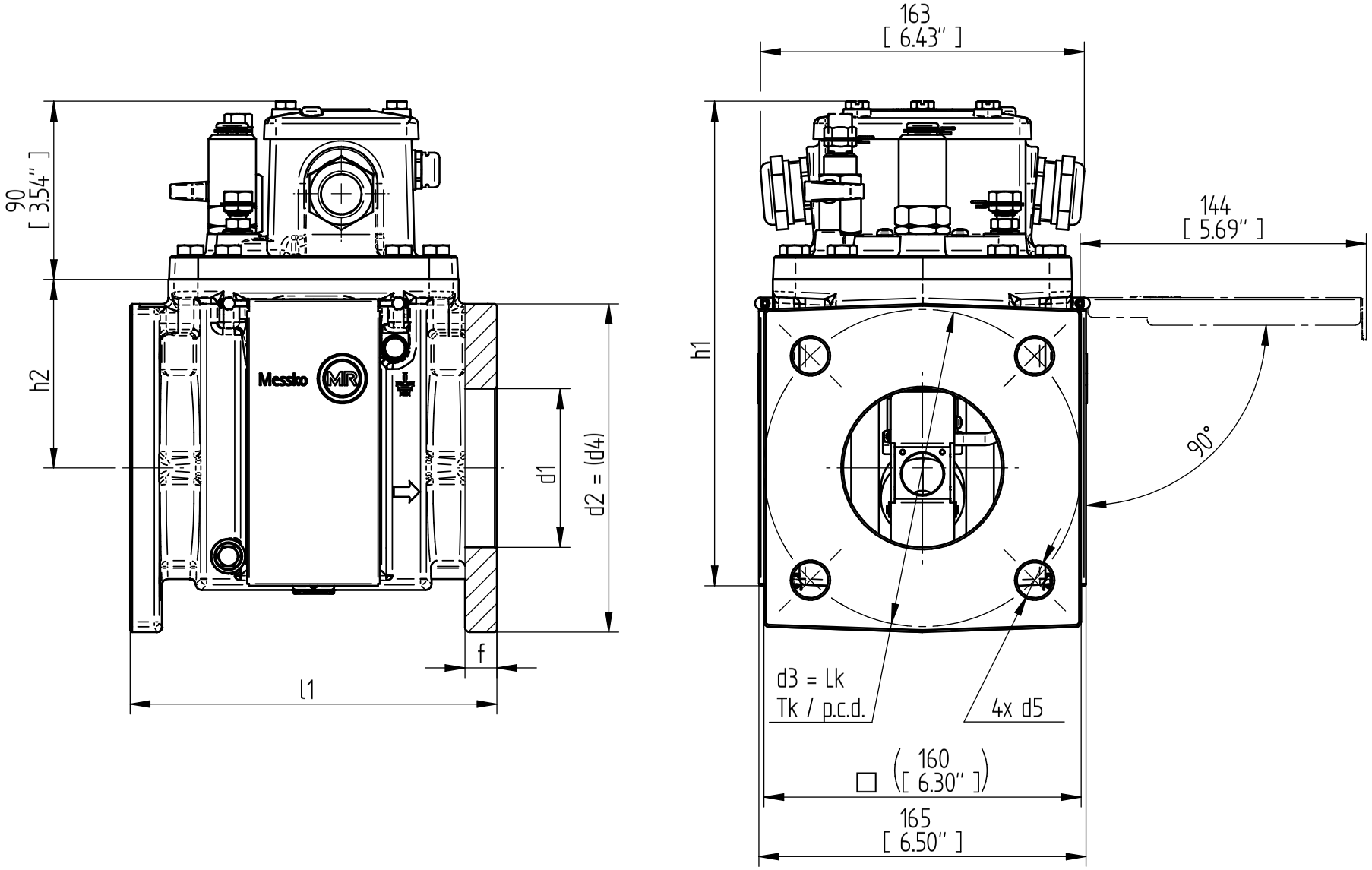

TRANSFORMER ACCESSORIES
MSAFE-BUCHHOLZ RELAY
MBR80 - CH

SERIAL NUMBER
-

MATERIAL NUMBER
1012926 70M

SHEET
1/ 1

	DATE	NAME	DOCUMENT NO.	
DFTR.	20.09.2022	KAFFENBERGER	SED 7284134 000 01	
CHKD.	11.10.2022	REHNELT	CHANGE NO.	SCALE
STAND.	11.10.2022	KLEYN	1116559	1:2

© MASCHINENFABRIK REINHAUSEN GMBH 2020
THE REPRODUCTION, DISTRIBUTION AND UTILIZATION OF THIS DOCUMENT AS WELL AS THE COMMUNICATION OF ITS CONTENTS TO OTHERS WITHOUT EXPRESS AUTHORIZATION IS PROHIBITED. OFFENDERS WILL BE HELD LIABLE FOR THE PAYMENT OF DAMAGES. ALL RIGHTS RESERVED IN THE EVENT OF THE GRANT OF A PATENT, UTILITY MODEL OR DESIGN.

DIMENSION IN mm EXCEPT AS NOTED

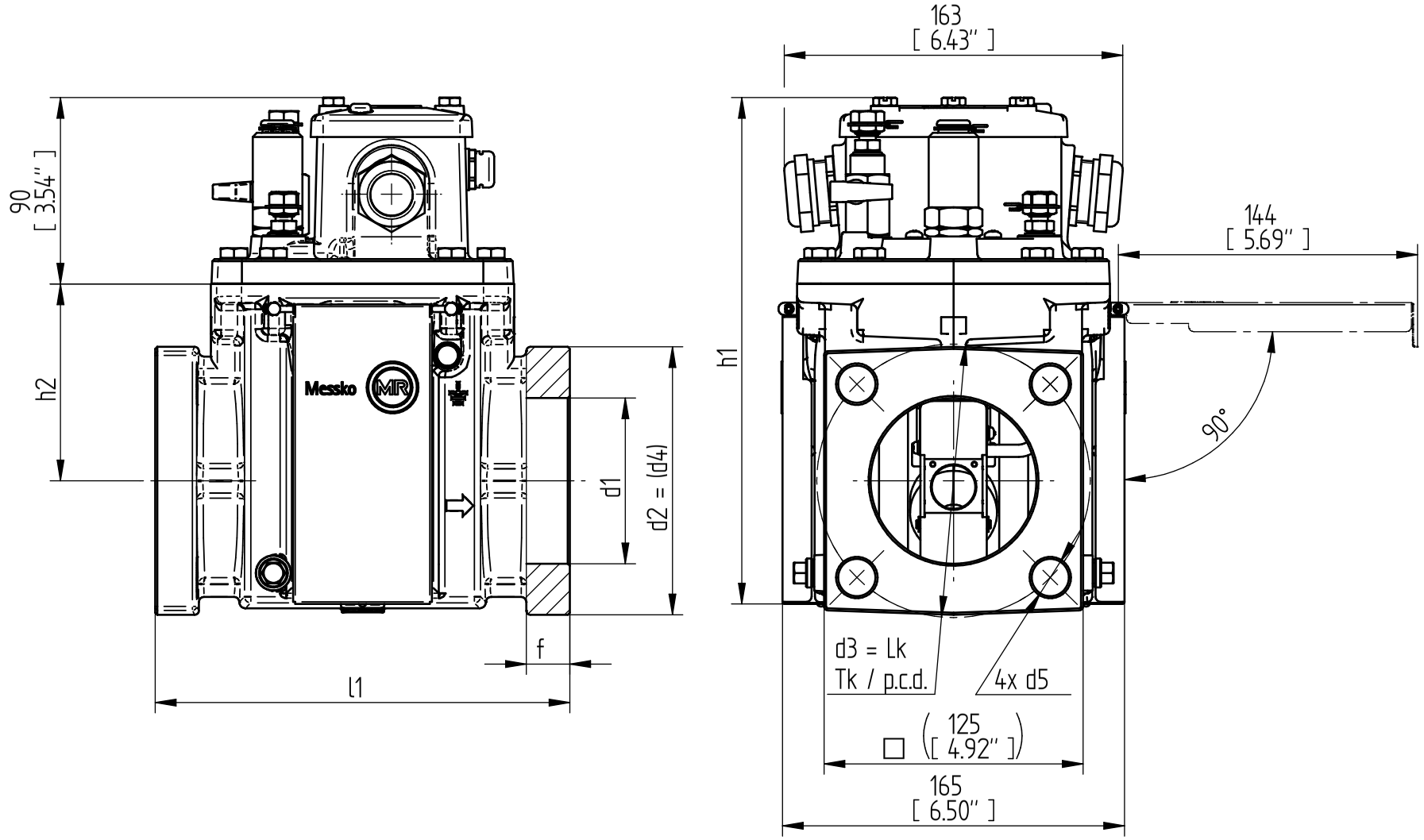

TRANSFORMER ACCESSORIES
MSAFE-BUCHHOLZ RELAY
MBR80-QU

SERIAL NUMBER
-

MATERIAL NUMBER
101292980M

SHEET
1/ 1

MASCHINENFABRIK REINHAUSEN GMBH COPYRIGHT RESERVED
THE REPRODUCTION, DISTRIBUTION AND UTILIZATION OF THIS DOCUMENT AS WELL AS THE COMMUNICATION OF ITS CONTENTS TO OTHERS WITHOUT EXPRESS AUTHORIZATION IS PROHIBITED. OFFENDERS WILL BE HELD LIABLE FOR THE PAYMENT OF DAMAGES. ALL RIGHTS RESERVED IN THE EVENT OF THE GRANT OF A PATENT, UTILITY MODEL OR DESIGN.

Position der Schaltkontakte / POSITION CONTACT POINT

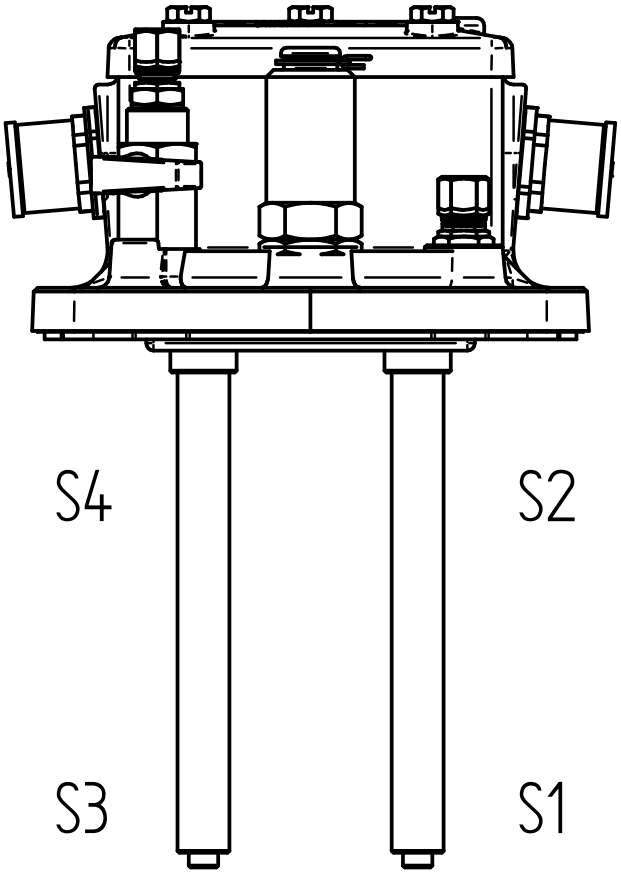

Elektrischer Anschluss / ELECTRICAL CONNECTION

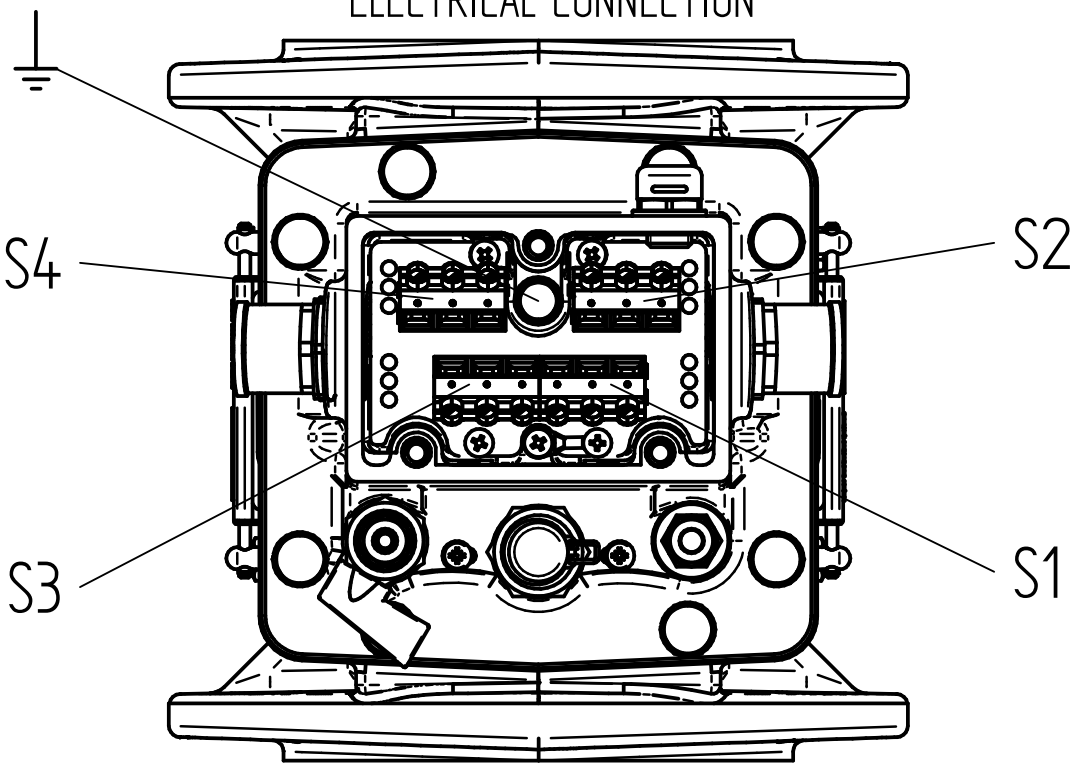

	DATE	NAME	DOCUMENT NO.
DFTR.	20.09.2022	KAFFENBERGER	SED 8956228 000 00
CHKD.	11.10.2022	REHNELT	CHANGE NO. / SCALE
STAND.	11.10.2022	KLEYN	1116559 / 1:1

DIMENSION IN mm EXCEPT AS NOTED

TRANSFORMER ACCESSORIES
MSAFE-BUCHHOLZRELAIS
POSITION CONTACT POINT / ELECTRICAL CONNECTION

SERIAL NUMBER

MATERIAL NUMBER 101719610M

SHEET 1 / 1

A4

Maschinenfabrik Reinhausen GmbH
Falkensteinstrasse 8
93059 Regensburg

+49 (0)941 4090-0
sales@reinhausen.com

www.reinhausen.com

9119797/00 KO - MESSKO® MSAFE® -
- 02/23 - Maschinenfabrik Reinhausen GmbH 2023

THE POWER BEHIND POWER.