THE POWER BEHIND POWER.

# Installation and commissioning instructions VACUTAP® VV®. On-load tap-changer

4349322/03 EN

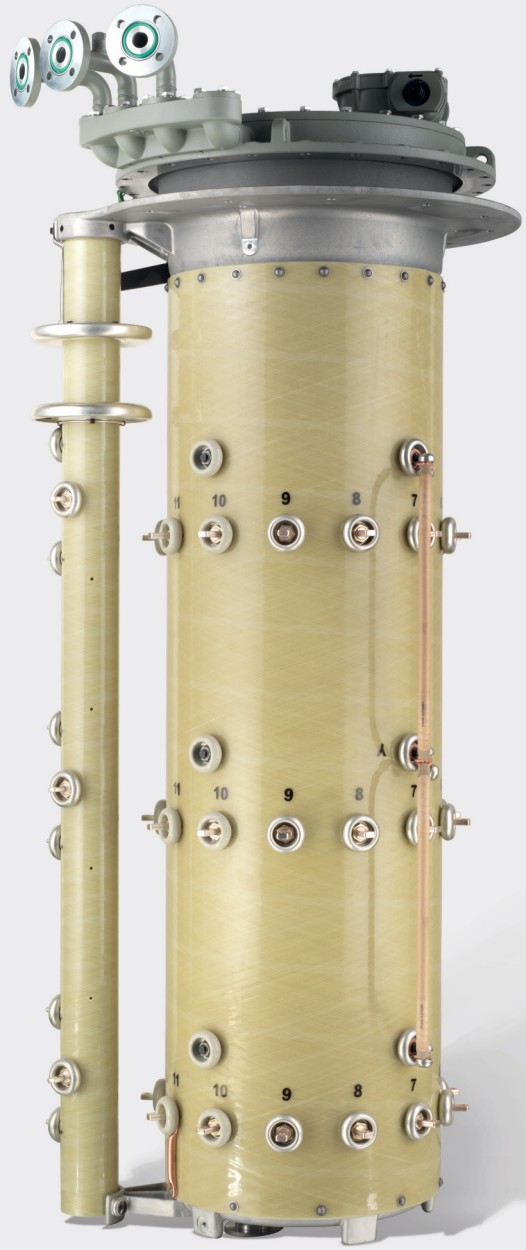

# Table of contents

# 1 Introduction

This technical file contains detailed descriptions of the safe and proper installation, connection, and commissioning of the product.

It also includes safety instructions and general information about the product.

Information about operation can be found in the operating instructions.

This technical file is intended solely for specially trained and authorized personnel.

## 1.1 Manufacturer

Maschinenfabrik Reinhausen GmbH
Falkensteinstrasse 8
93059 Regensburg
Germany

Tel.: +49 941 4090-0
E-mail: sales@reinhausen.com
Internet: www.reinhausen.com
MR Reinhausen customer portal: https://portal.reinhausen.com

Further information on the product and copies of this technical file are available from this address if required.

## 1.2 Completeness

This technical file is incomplete without the supporting documents.

The following documents are considered supporting documents:
- Unpacking instructions
- Supplement
- Routine test report
- Connection diagrams
- Dimensional drawings
- Order confirmation

## 1.3 Safekeeping

Keep this technical file and all supporting documents ready at hand and accessible for future use at all times.

# 1.4 Notation conventions

## 1.4.1 Hazard communication system

Warnings in this technical file are displayed as follows.

### 1.4.1.1 Warning relating to section

Warnings relating to sections refer to entire chapters or sections, sub-sections or several paragraphs within this technical file. Warnings relating to sections use the following format:

⚠ WARNING

**Type of danger!**
Source of the danger and outcome.
> Action
> Action

### 1.4.1.2 Embedded warning information

Embedded warnings refer to a particular part within a section. These warnings apply to smaller units of information than the warnings relating to sections. Embedded warnings use the following format:

⚠ DANGER! Instruction for avoiding a dangerous situation.

### 1.4.1.3 Signal words in warning notices

| Signal word | Meaning |
|---|---|
| DANGER | Indicates a hazardous situation which, if not avoided, will result in death or serious injury. |
| WARNING | Indicates a hazardous situation which, if not avoided, could result in death or serious injury. |
| CAUTION | Indicates a hazardous situation which, if not avoided, could result in minor or moderate injury. |
| NOTICE | Indicates measures to be taken to prevent damage to property. |

Table 1: Signal words in warning notices

## 1.4.2 Information system

Information is designed to simplify and improve understanding of particular procedures. In this technical file it is laid out as follows:

i Important information.

## 1.4.3 Instruction system

This technical file contains single-step and multi-step instructions.

### Single-step instructions

Instructions which consist of only a single process step are structured as follows:

Aim of action
✓ Requirements (optional).
> Step 1 of 1.
  » Result of step (optional).
» Result of action (optional).

### Multi-step instructions

Instructions which consist of several process steps are structured as follows:

Aim of action
✓ Requirements (optional).
1. Step 1.
   » Result of step (optional).
2. Step 2.
   » Result of step (optional).
» Result of action (optional).

# 2 Safety

- Read this technical file through to familiarize yourself with the product.
- This technical file is a part of the product.
- Read and observe the safety instructions provided in this chapter.
- Read and observe the warnings in this technical file in order to avoid function-related dangers.
- The product is manufactured on the basis of state-of-the-art technology. Nevertheless, risks to life and limb for the user or impairment of the product and other material assets due to the function may arise in the event of improper use.

## 2.1 Appropriate use

The product is an on-load tap-changer and adjusts the transmission ratio of transformers without interrupting the load flow. The product is designed solely for use in electrical energy systems and facilities. If used as intended and in compliance with the requirements and conditions specified in this technical file as well as the warning notices in this technical file and attached to the product, then the product does not present any danger to people, property or the environment. This applies throughout the service life of the product, from delivery, installation and operation to removal and disposal.

The following is considered appropriate use:
- Use the product only with the transformer/motor-drive unit specified in the order.
- The serial numbers of on-load tap-changer and on-load tap-changer accessories (drive, drive shaft, bevel gear, protective relay, etc.) must match if the on-load tap-changer and on-load tap-changer accessories are supplied as a set for one order.
- You will find the standard valid for the product and the year of issue on the nameplate.
- Operate the product in accordance with this provided technical file, the agreed delivery conditions and technical data.
- Ensure that all necessary work is performed by qualified personnel only.
- Only use the equipment and special tools included in the scope of delivery for the intended purpose and in accordance with the specifications of this technical file.
- The on-load tap-changer is not intended to be used with an oil filter unit.

### Permitted electrical operating conditions

In addition to the design data in accordance with the order confirmation, observe the following limits for the through-current and the step voltage:

In the standard version, the on-load tap-changer is designed for sinusoidal 50/60 Hz alternating current with a curve form symmetrical to the zero axis and can switch 2 times the rated through-current $I_r$ at its rated step voltage $U_{ir}$.

Exceeding the rated step voltage $U_{ir}$ by up to 10% for a short period is permitted as long as the rated step capacity $P_{StN}$ permissible for this step voltage is not exceeded.

## 2.2 Inappropriate use

Use is considered inappropriate if the product is used in a way other than as described in the "Appropriate use" section. In addition, observe the following:

### Prohibited electrical operating conditions

All operating conditions that do not comply with the design data in accordance with the order confirmation are prohibited.

Prohibited operating conditions may arise due to short circuits as well as due to inrush current impulses when energizing transformers or other electrical machines. This applies to the affected transformer itself just as it does to transformers electrically connected in parallel or serially or other electrical machines.

Higher voltages may occur due to transformer overexcitation following load shedding, for example.

Operations outside of the permitted operating conditions can lead to injury to persons and damage to the product.

- Prevent any such operations outside of the permitted operating conditions by taking suitable measures.

## 2.3 Fundamental safety instructions

To prevent accidents, disruptions and damage as well as unacceptable adverse effects on the environment, those responsible for transport, installation, operation, maintenance and disposal of the product or parts of the product must ensure the following:

### Personal protective equipment

Loosely worn or unsuitable clothing increases the danger of becoming trapped or caught up in rotating parts and the danger of getting caught on protruding parts. This poses a danger to life and limb.

- Wear appropriate personal protective equipment such as a helmet, work gloves, etc. for the respective activity.
- Never wear damaged personal protective equipment.
- Never wear rings, necklaces, or other jewelry.
- If you have long hair, wear a hairnet.

### Work area

Untidy and poorly lit work areas can lead to accidents.

- Keep the work area clean and tidy.
- Make sure that the work area is well lit.
- Observe the applicable laws for accident prevention in the relevant country.

### Working during operation

The product may only be operated in a sound, operational condition. Otherwise it poses a danger to life and limb.

- Regularly check the operational reliability of safety equipment.
- Comply with the inspection work, maintenance work and maintenance intervals described in this technical file.

### Explosion protection

Highly flammable or explosive gases, vapors and dusts can cause serious explosions and fire. This increases the danger to life and limb.

- Do not install, operate or perform maintenance work on the product in areas where a risk of explosion is present.

### Safety markings

Warning signs and safety information plates are safety markings on the product. They are an important aspect of the safety concept.

- Observe all safety markings on the product.
- Make sure all safety markings on the product remain intact and legible.
- Replace safety markings that are damaged or missing.

### Ambient conditions

To ensure reliable and safe operation, the product must only be operated under the ambient conditions specified in the technical data.

- Observe the specified operating conditions and requirements for the installation location.

### Auxiliary materials and operating materials

Auxiliary materials and operating materials not approved by the manufacturer can lead to personal injury, damage to property and malfunctions of the product.

- Only use insulating fluids [►Section 8.1.2, Page 154] approved by the manufacturer.
- Only use conductive and grounded hoses, pipes and pump equipment that are approved for flammable liquids.
- Only use lubricants and auxiliary materials approved by the manufacturer.
- Contact the manufacturer.

### Modifications and conversions

Unauthorized or inappropriate changes to the product may lead to personal injury, material damage and operational faults.

- Only modify the product after consultation with Maschinenfabrik Reinhausen GmbH.

### Spare parts

Spare parts not approved by Maschinenfabrik Reinhausen GmbH may lead to physical injury, damage to the product and malfunctions.

- Only use spare parts that have been approved by Maschinenfabrik Reinhausen GmbH.
- Contact Maschinenfabrik Reinhausen GmbH.

## 2.4 Personal protective equipment

Personal protective equipment must be worn during work to minimize risks to health.

- Always wear the personal protective equipment required for the job at hand.
- Never wear damaged personal protective equipment.
- Observe information about personal protective equipment provided in the work area.

| | |
|---|---|
| **Protective clothing** | Close-fitting work clothing with a low tearing strength, with tight sleeves and with no protruding parts. It mainly serves to protect the wearer against being caught by moving machine parts. |
| **Safety shoes** | To protect against falling heavy objects and slipping on slippery surfaces. |
| **Safety glasses** | To protect the eyes from flying parts and splashing liquids. |
| **Visor** | To protect the face from flying parts and splashing liquids or other dangerous substances. |
| **Hard hat** | To protect against falling and flying parts and materials. |
| **Hearing protection** | To protect against hearing damage. |
| **Protective gloves** | To protect against mechanical, thermal, and electrical hazards. |

Table 2: Personal protective equipment

## 2.5 Personnel qualification

The person responsible for assembly, commissioning, operation, maintenance and inspection must ensure that the personnel are sufficiently qualified.

### Electrically skilled person

The electrically skilled person has a technical qualification and therefore has the required knowledge and experience, and is also conversant with the applicable standards and regulations. The electrically skilled person is also proficient in the following:

- Can identify potential dangers independently and is able to avoid them.
- Is able to perform work on electrical systems.
- Is specially trained for the working environment in which (s)he works.
- Must satisfy the requirements of the applicable statutory regulations for accident prevention.

### Electrically trained persons

An electrically trained person receives instruction and guidance from an electrically skilled person in relation to the tasks undertaken and the potential dangers in the event of inappropriate handling as well as the protective devices and safety measures. The electrically trained person works exclusively under the guidance and supervision of an electrically skilled person.

### Operator

The operator uses and operates the product in line with this technical file. The operating company provides the operator with instruction and training on the specific tasks and the associated potential dangers arising from improper handling.

### Technical Service

We strongly recommend having maintenance, repairs and retrofitting carried out by our Technical Service department. This ensures that all work is performed correctly. If maintenance is not carried out by our Technical Service department, please ensure that the personnel who carry out the maintenance are trained and authorized by Maschinenfabrik Reinhausen GmbH to carry out the work.

### Authorized personnel

Authorized personnel are trained by Maschinenfabrik Reinhausen GmbH to carry out special maintenance.

# 3 Product description

## 3.1 Scope of delivery

The product is packaged with protection against moisture and is usually delivered as follows:
- On-load tap-changer
- Motor-drive unit
- Drive shaft with coupling parts and bevel gear

- Protective device
- Technical files

Please refer to the delivery slip for full details of scope of delivery.

> i On-load tap-changers can also be provided as an on-load tap-changer set with a common motor-drive unit.

Note the following information:
- Check the shipment for completeness on the basis of the shipping documents.
- Store the parts in a dry place until installation
- The product must remain in its airtight, protective wrapping and may only be removed immediately before installation

You will find more information in the "Packaging, transport, and storage" [▶Section 4, Page 27] chapter.

## 3.2 On-load tap-changer

### 3.2.1 Function description

On-load tap-changers are used to adjust the transmission ratio of transformers without interrupting the load flow. This makes it possible to compensate for aspects such as fluctuations in voltage occurring in the power transmission grid. For this purpose, on-load tap-changers are fitted in transformers and connected to the active part of the transformer.

A motor-drive unit which receives a control impulse (e.g. from a voltage regulator) changes the operating position of the on-load tap-changer, and the transformer's transmission ratio is adapted to the prevailing operating requirements as a result.

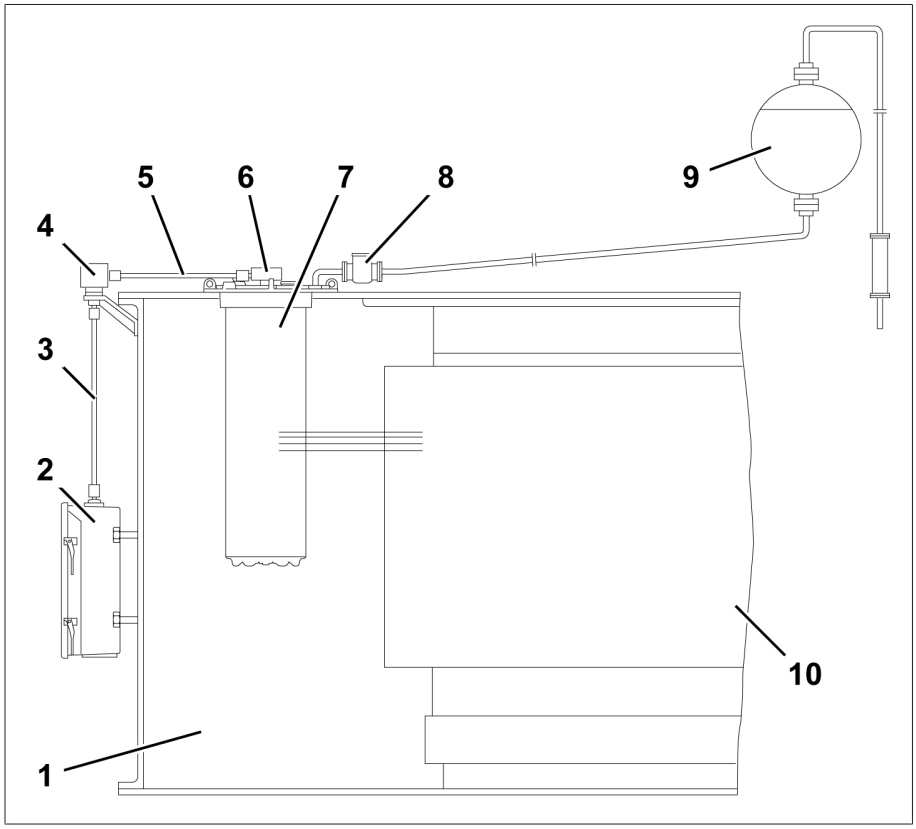

Figure 1: System overview of on-load tap-changer, transformer

| | | | |
|---|---|---|---|
| 1 | Transformer tank | 6 | Gear unit |
| 2 | Motor-drive unit | 7 | On-load tap-changer |
| 3 | Vertical drive shaft | 8 | Protective relay |
| 4 | Bevel gear | 9 | Oil conservator |
| 5 | Horizontal drive shaft | 10 | Active part |

### 3.2.2 Setup/models

The following drawing shows the main components of the on-load tap-changer.

You will find a detailed drawing of the on-load tap-changer in the "Drawings [▶Section 9, Page 162]" section.

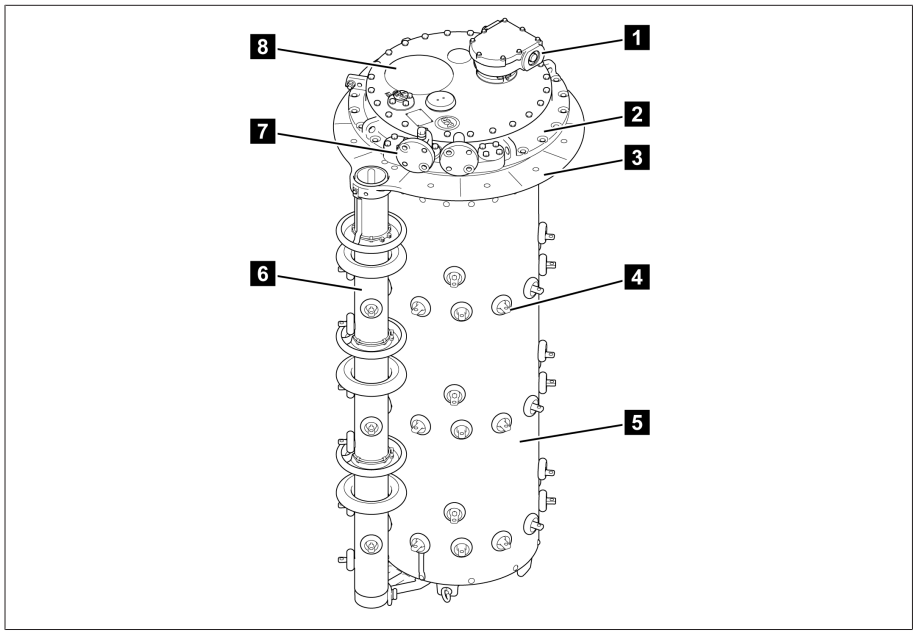


Figure 2: On-load tap-changer

| | | | |
|---|---|---|---|
| 1 | Upper gear unit | 2 | On-load tap-changer head |
| 3 | Supporting flange | 4 | Connection contact |
| 5 | Oil compartment | 6 | Change-over selector |
| 7 | Pipe bend | 8 | Rupture disk |

### 3.2.2.1 Pipe connections

The on-load tap-changer head features 4 pipe connections for different purposes.

Depending on the order, some or all of these pipe connections are fitted with pipe bends ex factory. All pipe bends can be freely swiveled once the pressure ring is loosened.

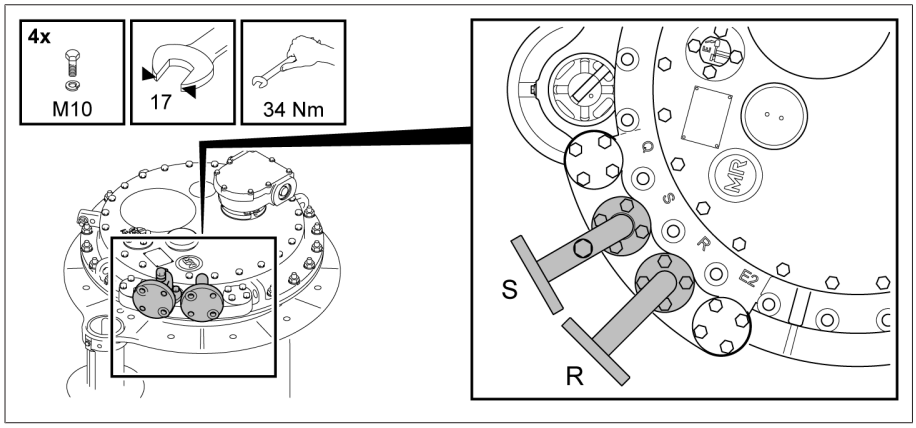


Figure 3: Pipe connections with pipe bends

#### Pipe connection Q

The pipe connection Q is closed with a blank cover.

> The functions of the R and Q pipe connections can be interchanged.

#### Pipe connection S

The pipe bend on pipe connection S features a vent screw and can be connected to a pipe that ends with a drain valve on the side of the transformer tank at operating height. If the on-load tap-changer is fitted with an oil suction pipe, the on-load tap-changer can be completely emptied via pipe connection S.

#### Pipe connection R

Pipe connection R is intended for attachment of the protective relay and connection of the on-load tap-changer oil conservator and can be interchanged with pipe connection Q.

#### Pipe connection E2

Pipe connection E2 is sealed off with a blank cover. It leads into the oil tank of the transformer, directly under the on-load tap-changer head and can be connected to a collective pipe for the Buchholz relay, if necessary. This pipe connection serves a further purpose, namely to equalize the pressure between the transformer tank and oil compartment of the on-load tap-changer, which is necessary for drying, filling with insulating fluid and transportation of the transformer.

### 3.2.3 Nameplate and serial number

The nameplate is on the on-load tap-changer head cover.

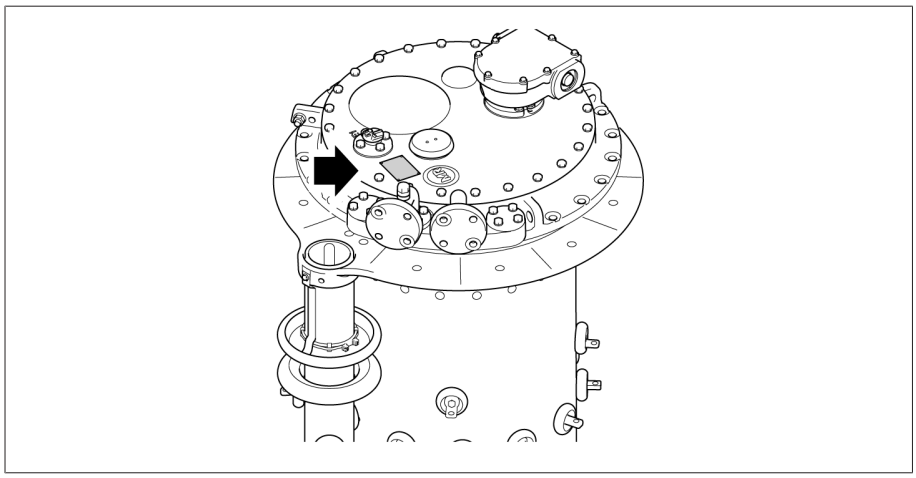

Figure 4: Nameplate with serial number

### 3.2.4 Protective devices

The on-load tap-changer is equipped with the following protective devices.

#### 3.2.4.1 Protective relay

##### 3.2.4.1.1 Function description

The protective relay is looped into the circuit breaker tripping circuit. It is tripped when the specified speed of flow from the on-load tap-changer head to the oil conservator is exceeded due to a fault. The flowing insulating fluid actuates the flap valve which tips over into position OFF. The contact in the dry-reed magnetic switch is thereby actuated, the circuit breakers are tripped, and the transformer is de-energized.

The protective relay is a component of an on-load tap-changer filled with insulating fluid and its properties conform to the respective applicable version of IEC publication 60214-1.

> Diverter switch operations at rated switching capacity or at permissible overload will not cause the protective relay to trip.

> The protective relay responds to flow, not to gas accumulated in the protective relay. It is not necessary to bleed the protective relay when filling the transformer with insulating fluid. Gas accumulation in the protective relay is normal.

### 3.2.4.1.2 Design/versions

Front view

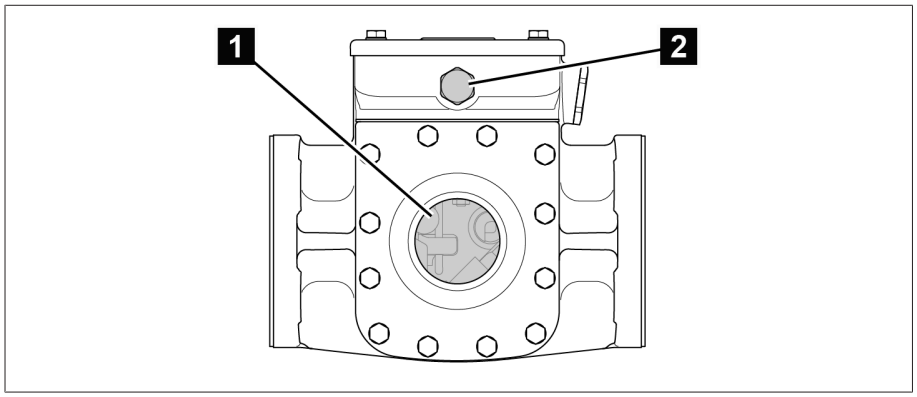


Figure 5: Protective relay RS 2001

| | | | |
|---|---|---|---|
| 1 | Inspection window | 2 | Pressure equalization element |

Rear view

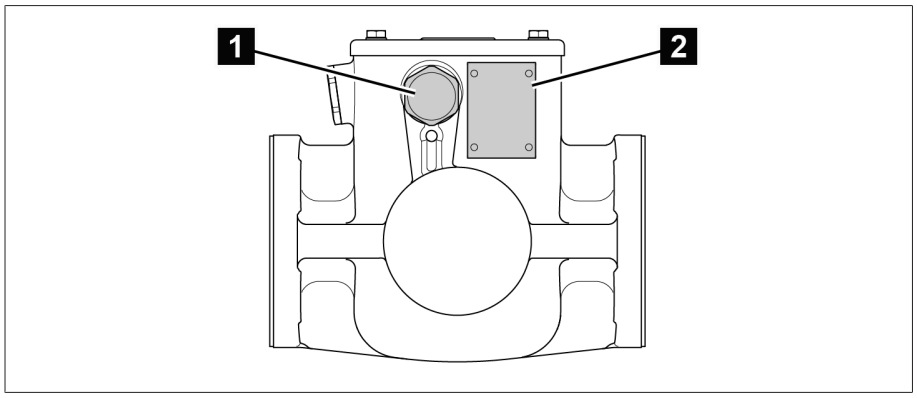


Figure 6: Protective relay RS 2001

| | | | |
|---|---|---|---|
| 1 | Dummy plug | 2 | Nameplate |

> The protective relay RS 2001/R has an extra inspection window on the rear.

View from above

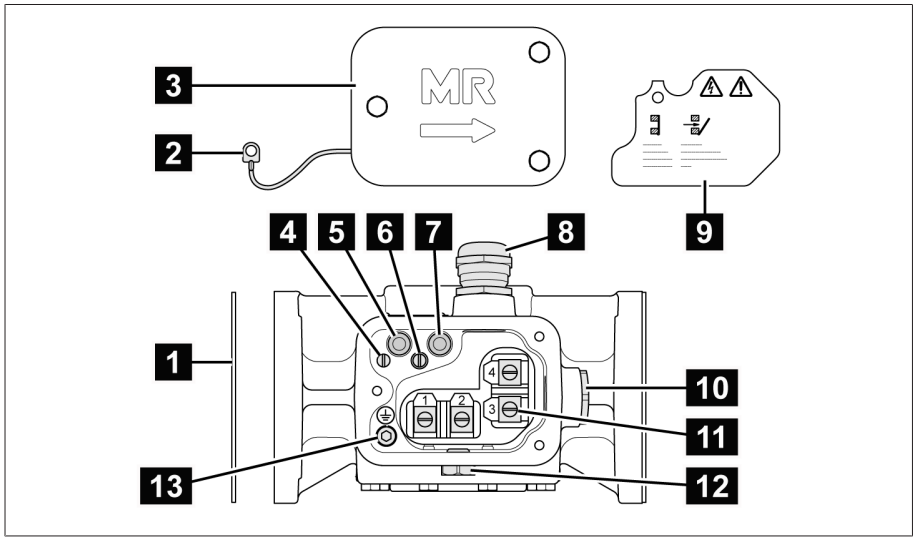


Figure 7: Protective relay RS 2001

| | | | |
|---|---|---|---|
| 1 | Gasket | 2 | Potential tie-in |
| 3 | Terminal box cover | 4 | Slotted head screw for potential tie-in |
| 5 | OPERATION (reset) test button | 6 | Slotted head screw for protective cover |
| 7 | OFF (test tripping) test button | 8 | Cable gland |
| 9 | Protective cover | 10 | Dummy plug |
| 11 | Connection terminal | 12 | Pressure equalization element |
| 13 | Cylinder head screw for protective conductor connection | | |

The protective relays RS 2003 and RS 2004 have a 1/2"-14NPT adapter in place of the cable gland.

### 3.2.4.1.3 Nameplate

The nameplate is on the back of the protective relay.

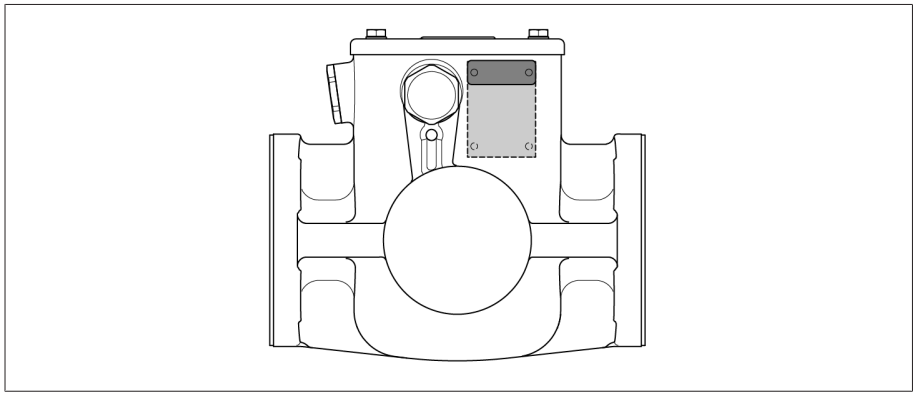

Figure 8: Nameplate

### 3.2.4.2 Pressure monitoring device DW

#### 3.2.4.2.1 Function description

The DW 2000 pressure monitoring device protects the on-load tap-changer from impermissible pressure increases, contributing to the safety of the transformer. The pressure monitoring device is installed on the outside of the on-load tap-changer and is tripped by impermissible static and dynamic pressures in the on-load tap-changer oil compartment.

The pressure monitoring device uses a concept where a corrugated tube acts as a barometer together with a spring providing counter force. This assembly is mechanically linked to the sensor on the snap-action switch.

The pressure increase activates the sensor on the snap-action switch, which flips into the OFF position. This triggers the circuit breaker and de-energizes the transformer. The sensor on the snap-action switch has to be reset to the initial position by hand after tripping.

Low-energy interference does not cause the pressure monitoring device to trip since the required tripping pressure is not reached. The tripping pressure is set at the factory and prevented from being changed.

The pressure monitoring device responds to large pressure increases faster than the protective relay. The protective relay is part of the standard MR protection system and comes as standard.

> Additional use of a pressure monitoring device also requires installation of the provided protective relay.

The features and characteristics of the pressure monitoring device comply with the respective applicable version of IEC publication 60214-1.

> Diverter switch operations at the rated switching capacity or permitted overload do not cause the pressure-operated relay to trip.

> The pressure-operated relay responds to a pressure change and not to gas accumulation under the pressure-operated relay. Gas accumulation under the pressure-operated relay is normal.

#### 3.2.4.2.2 Design/versions

There are two variants of the pressure monitoring device:
- DW 2000 for vertical installation
- DW 2000 for horizontal installation

The housing and the cover cap of the pressure monitoring device consist of lightweight, corrosion-resistant metal.

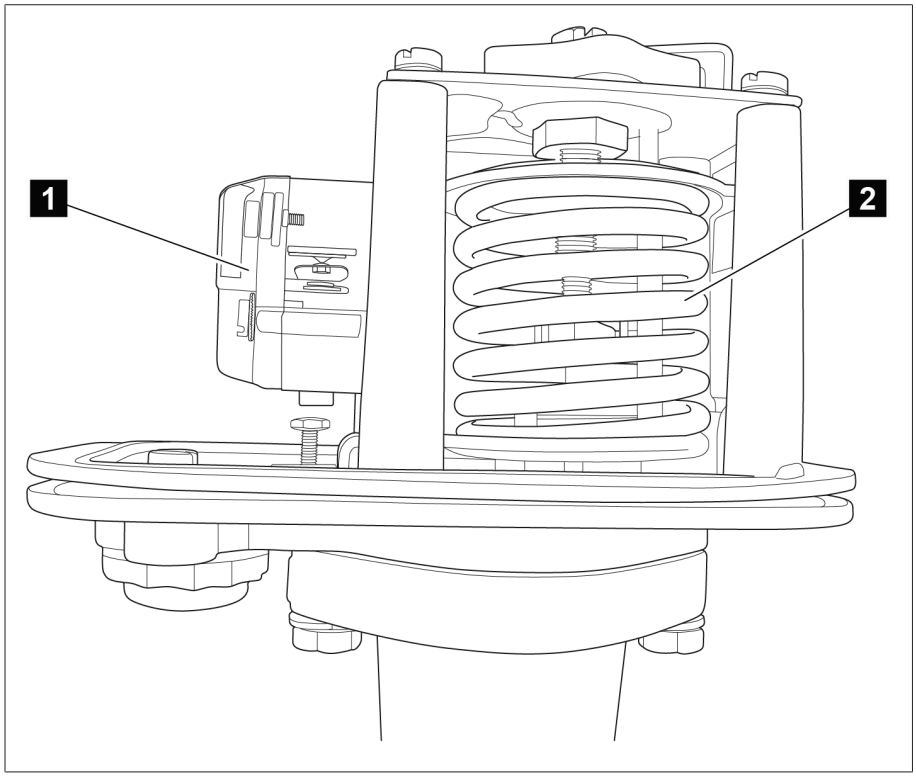


Figure 9: Snap-action switch and pressure measuring element

| | | | |
|---|---|---|---|
| 1 | Snap-action switch | 2 | Pressure measuring element |

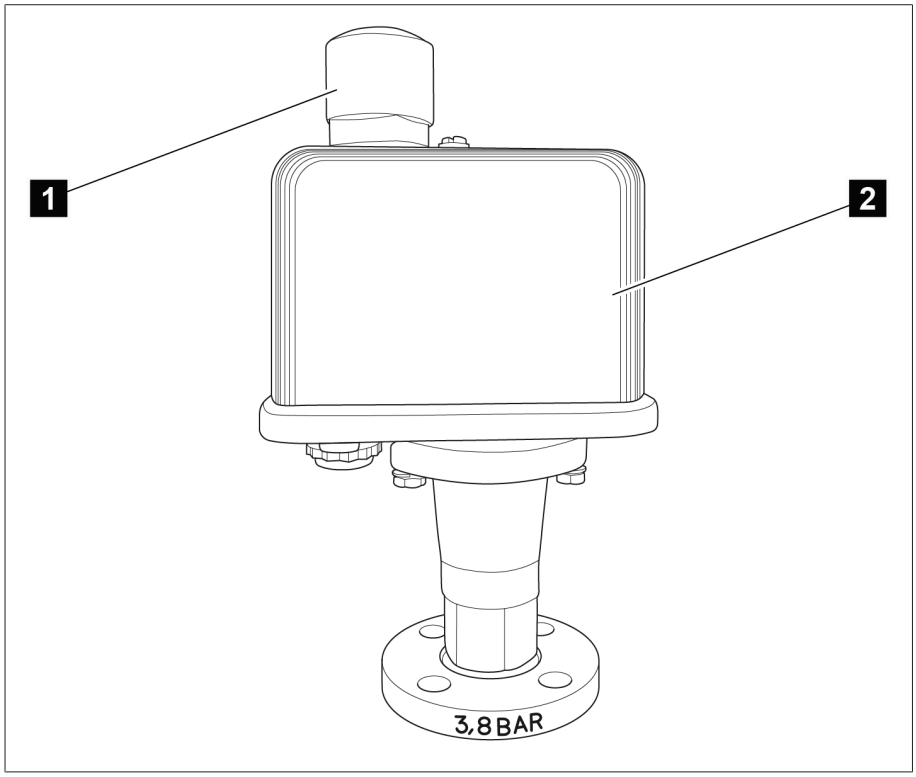


Figure 10: Pressure monitoring device with cover cap and ventilation

| | | | |
|---|---|---|---|
| 1 | Ventilation | 2 | Cover cap |

#### 3.2.4.3 Rupture disk

The rupture disk is a pressure relief device without signaling contact in accordance with IEC 60214-1 and is located in the on-load tap-changer head cover.

The rupture disk responds to a defined overpressure in the oil compartment of the on-load tap-changer.

#### 3.2.4.4 Pressure relief device MPREC®

On request, MR will supply a pre-fitted MPREC® pressure relief device in place of the rupture disk. This device responds to a defined overpressure in the oil compartment of the on-load tap-changer.

The on-load tap-changer therefore meets the requirements of IEC 60214-1 regarding pressure relief devices.

#### 3.2.4.5 Tap-change supervisory device

The tap-change supervisory device monitors both the drive shaft between on-load tap-changer(s) and motor-drive unit and the correct switching of the diverter switch.

#### 3.2.4.6 Temperature monitoring

The temperature monitoring system monitors the temperature of the insulating fluid in the oil compartment of the on-load tap-changer.

## 3.3 Drive shaft

### 3.3.1 Function description

The drive shaft is the mechanical connection between the drive and the on-load tap-changer/de-energized tap-changer.

The bevel gear changes the direction from vertical to horizontal.

Accordingly, the vertical drive shaft has to be mounted between drive and bevel gear, and the horizontal drive shaft between bevel gear and on-load tap-changer or de-energized tap-changer.

### 3.3.2 Design/versions

The drive shaft consists of a square tube and is coupled at each end by two coupling brackets and one coupling bolt to the driving or driven shaft end of the device to be connected.

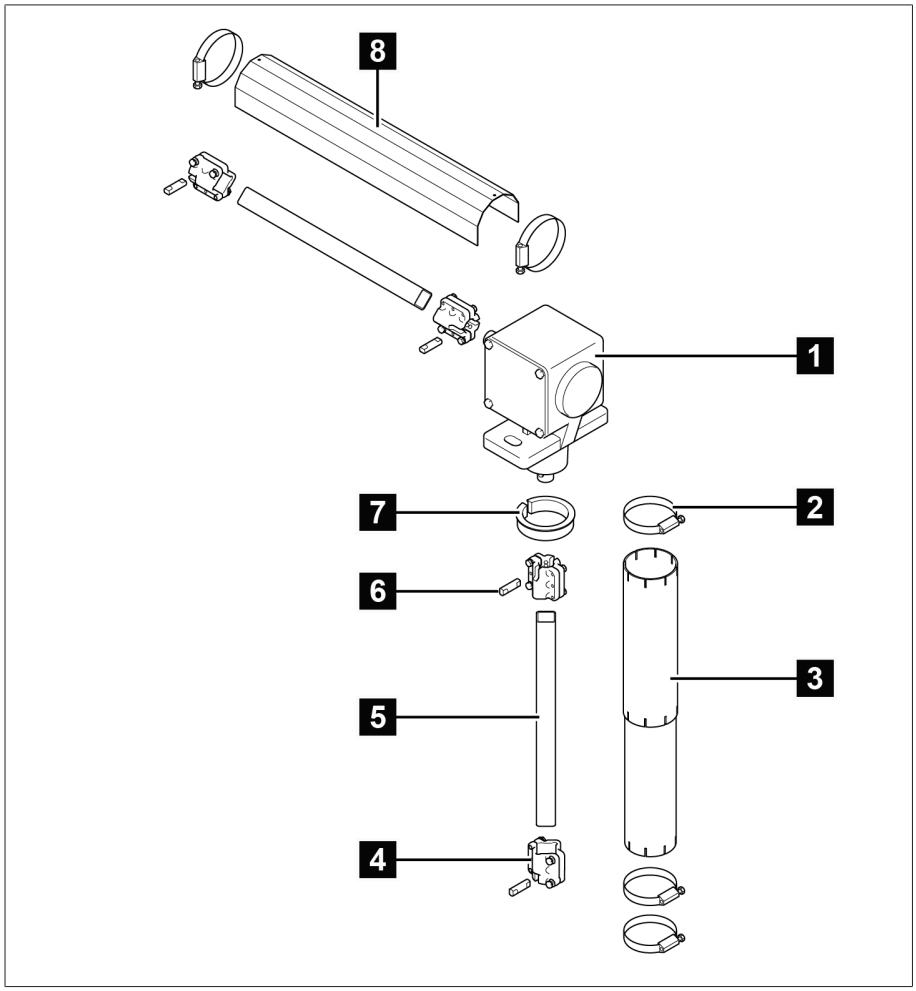


Figure 11: Components of the drive shaft

| | | | |
|---|---|---|---|
| 1 | Bevel gear | 2 | Hose clip |
| 3 | Telescopic protective tube | 4 | Coupling bracket |
| 5 | Square tube | 6 | Coupling bolt |
| 7 | Adapter ring | 8 | Protective cover |

### 3.3.2.1 Drive shaft without cardan joint and without insulator

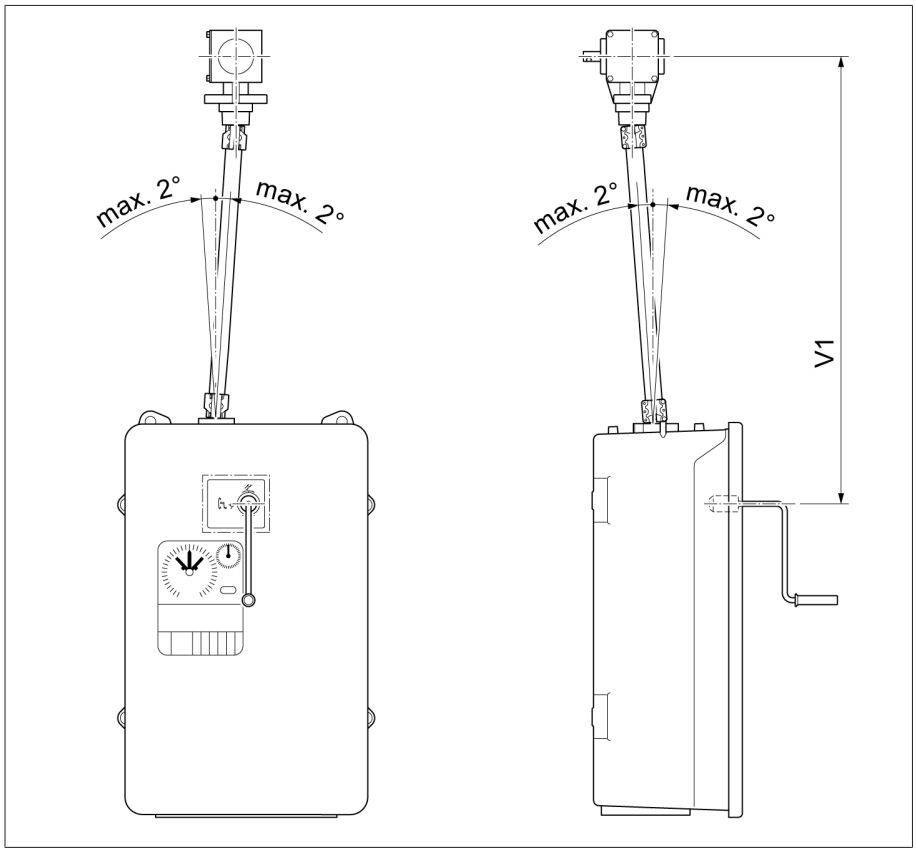


Figure 12: Drive shaft without cardan joint and without insulator (= standard version)

| Configuration | V 1 min | Intermediate bearing |
|---|---|---|
| Middle of hand crank – middle of bevel gear (maximum permissible axial offset 2°) | 536 mm | When the maximum value of 2472 mm is exceeded, it is necessary to use an intermediate bearing.<br>V 1 ≤ 2472 mm (without intermediate bearing)<br>V 1 > 2472 mm (with intermediate bearing) |

### 3.3.2.2 Drive shaft without cardan joint and with insulator

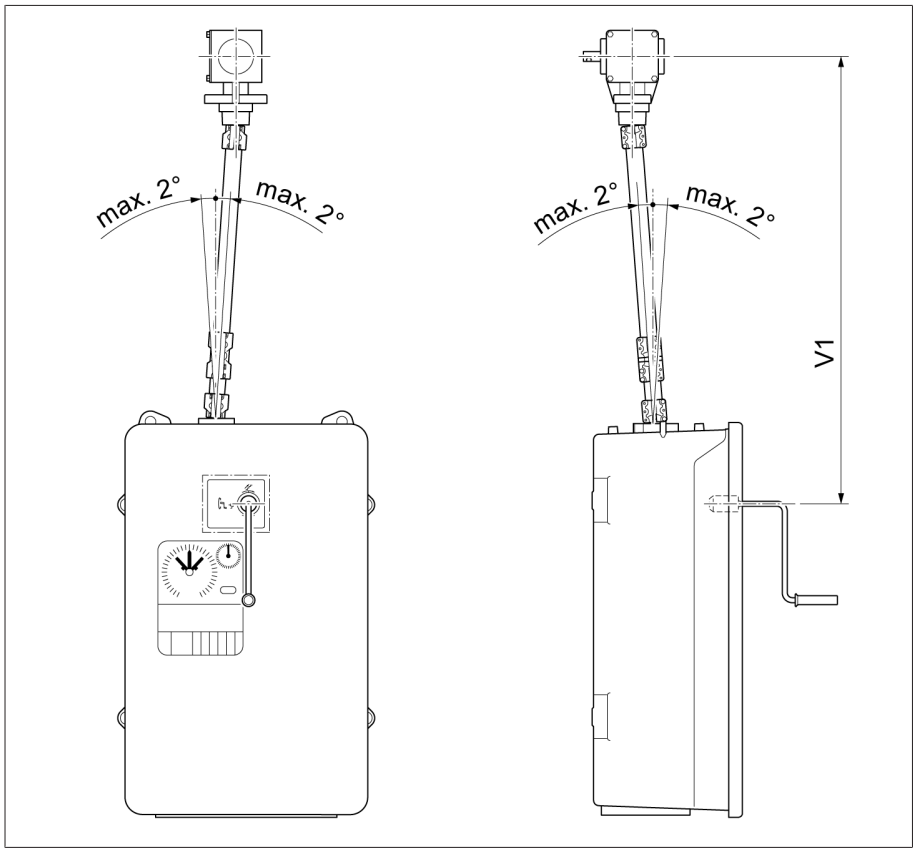


Figure 13: Drive shaft without cardan joint and with insulator (= special model)

| Configuration | V 1 min | Intermediate bearing |
|---|---|---|
| Middle of hand crank – middle of bevel gear (maximum permissible axial offset 2°) | 706 mm | When the maximum value of 2472 mm is exceeded, it is necessary to use an intermediate bearing.<br>V 1 ≤ 2472 mm (without intermediate bearing)<br>V 1 > 2472 mm (with intermediate bearing) |

### 3.3.2.3 Drive shaft with cardan joints, without insulator

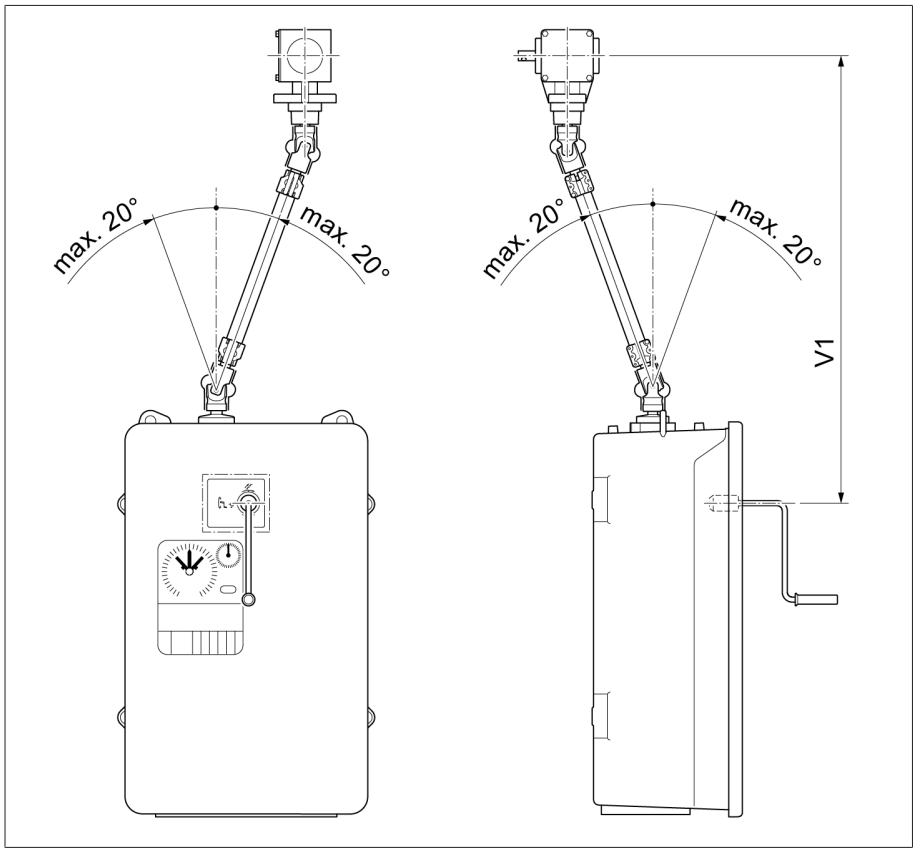


Figure 14: Drive shaft with cardan joints, without insulator (= special model)

| Configuration | V 1 min [mm] | Intermediate bearing for [mm] |
|---|---|---|
| Middle of hand crank – middle of bevel gear (maximum permissible axial offset 20°) | 798 | V 1 > 2564 |

### 3.3.2.4 Drive shaft with cardan joints, with insulator

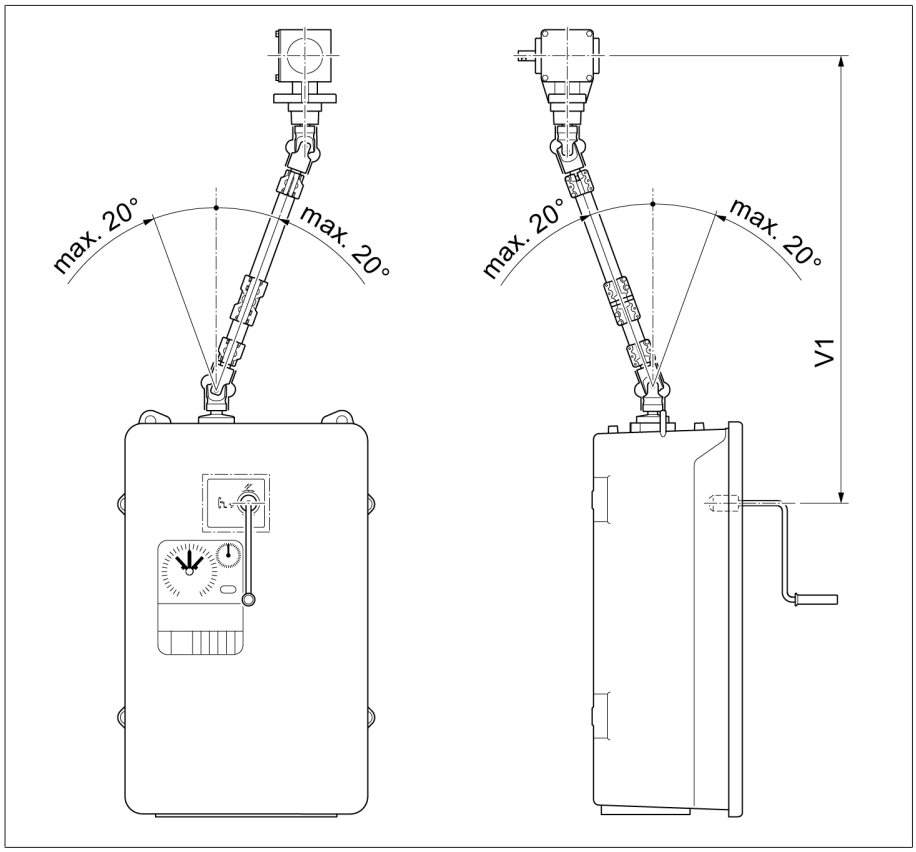


Figure 15: Drive shaft with cardan joints, with insulator (= special model)

| Configuration | V 1 min [mm] | Intermediate bearing for [mm] |
|---|---|---|
| Middle of hand crank – middle of bevel gear (maximum permissible axial offset 20°) | 978 | V 1 > 2772 |

# 4 Packaging, transport and storage

## 4.1 Packaging

The products are sometimes supplied with sealed packaging and sometimes in a dry state, depending on requirements.

Sealed packaging surrounds the packaged goods with plastic foil on all sides.

Products that have also been dried are identified by a yellow label on the sealed packaging. In the dry state, delivery is also possible in a transport container.

The information in the following sections should be applied as appropriate.

### 4.1.1 Suitability

*NOTICE*

**Property damage due to incorrectly stacked crates!**
Stacking the crates incorrectly can lead to damage to the packaged goods.
- The outer marking on the packaging states if, for example, the on-load tap-changer or selector has been packed upright. Never stack these crates.
- General rule: Do not stack crates above a height of 1.5 m.
- For other crates: Only stack up to 2 equally sized crates on top of one another.

The packaging is suitable to ensure undamaged and fully functional means of transportation in compliance with local transportation laws and regulations.

The packaged goods are packed in a sturdy crate. This crate ensures that, when in the intended transportation position, the packaged goods are stabilized to prevent impermissible changes in position, and that none of the parts touch the loading surface of the means of transport or touch the ground after unloading.

Sealed packaging surrounds the packaged goods with plastic foil on all sides. The packaged goods are protected from humidity using a desiccant. The plastic foil was bonded after the desiccant is added.

### 4.1.2 Markings

The packaging bears a signature with instructions for safe transport and correct storage. The following symbols apply to the shipment of non-hazardous goods. Adherence to these symbols is mandatory.

| | | | | |
|---|---|---|---|---|
|  | 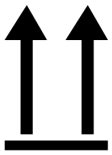 |  |  |  |
| Protect against moisture | Top | Fragile | Attach lifting gear here | Center of mass |

Table 3: Shipping pictograms

## 4.2 Transportation, receipt and handling of shipments

**⚠ WARNING**

**Danger of death or severe injury!**

Danger of death or serious injuries due to tipping or falling load.

- Only transport the crate when closed.
- Do not remove the securing material used in the crate during transport.
- If the product is delivered on a pallet, secure it sufficiently.
- Only trained and authorized persons may select the sling gear and secure the load.
- Do not walk under the suspended load.
- Use means of transport and lifting gear with a sufficient carrying capacity in accordance with the weight stated on the delivery slip.

In addition to oscillation stress, jolts must also be expected during transportation. In order to prevent possible damage, avoid dropping, tipping, knocking over and colliding with the product.

If a crate tips over, falls from a certain height (e.g. when slings tear) or experiences an unbroken fall, damage must be expected regardless of the weight.

Every delivered shipment must be checked for the following by the recipient before acceptance (acknowledgment of receipt):

- Completeness based on the delivery slip
- External damage of any type

The checks must take place after unloading when the crate or transport container can be accessed from all sides.

**Visible damage**

If external transport damage is found upon receipt of the shipment, proceed as follows:

- Immediately record the identified transport damage in the shipping documents and have this countersigned by the carrier.
- In the event of severe damage, total loss or high damage costs, immediately notify the manufacturer and the relevant insurance company.
- After identifying damage, do not modify the condition of the shipment further and retain the packaging material until an inspection decision has been made by the transport company or the insurance company.
- Record the details of the damage immediately on site together with the carrier involved. This is essential for any claim for damages.
- Photograph damage to packaging and packaged goods. This also applies to signs of corrosion on the packaged goods due to moisture inside the packaging (rain, snow, condensation).
- *NOTICE!* Damage to packaged goods due to damaged sealed packaging. If the product is delivered in sealed packaging, check the sealed packaging immediately. If the sealed packaging is damaged, do not under any circumstances install or commission the packaged goods. Either re-dry the dried packaged goods as per the operating instructions, or contact the manufacturer to agree on how to proceed.
- Identify the damaged parts.

**Hidden damage**

When damages are not determined until unpacking after receipt of the shipment (hidden damage), proceed as follows:

- Make the party responsible for the damage liable as soon as possible by telephone and in writing, and prepare a damage report.
- Observe the time periods applicable to such actions in the respective country. Inquire about these in good time.

With hidden damage, it is very hard to make the transportation company (or other responsible party) liable. Any insurance claims for such damages can only be successful if relevant provisions are expressly included in the insurance terms and conditions.

## 4.3 Storage of shipments

### Packaged goods dried by Maschinenfabrik Reinhausen

Upon receipt of the shipment, immediately remove the packaged goods dried by Maschinenfabrik Reinhausen from the sealed packaging and store air-tight in dry insulating fluid until used if the packaged goods were not supplied in insulating fluid.

### Non-dried packaged goods

Non-dried packaged goods but with a functional sealed packaging can be stored outdoors when the following conditions are complied with.
When selecting and setting up the storage location, ensure the following:

- Protect stored goods against moisture (flooding, water from melting snow and ice), dirt, pests such as rats, mice, termites and so on, and against unauthorized access.
- Store the crates on timber beams and planks as a protection against rising damp and for better ventilation.
- Ensure sufficient carrying capacity of the ground.
- Keep entrance paths free.
- Check stored goods at regular intervals. Also take appropriate action after storms, heavy rain or snow and so on.

Protect the packaging foil from direct sunlight so that it does not disintegrate under the influence of UV rays, which would cause the packaging to lose its sealing function.

If the product is installed more than 6 months after delivery, suitable measures must be taken without delay. The following measures can be used:

- Correctly regenerate the drying agent and restore the sealed packaging.
- Unpack the packed goods and store in a suitable storage space (well ventilated, as dust-free as possible, humidity < 50% where possible).

## 4.4 Unpacking shipments and checking for transportation damages

- *NOTICE!* Damage to packaged goods due to ineffectively sealed packaging. Transport the packaged crate to the place where the packaged goods are to be installed. Do not open the sealed packaging until just before installation.
- ⚠ WARNING! Serious injuries and damage to the packaged goods due to the packaged goods tipping out. Place the packaged goods in an upright crate and protect it from tipping out.
- Unpack the packaged goods and check the condition.
- Check the completeness of the accessories kit using the delivery slip.

# 5 Mounting

**⚠ WARNING**

Risk of crushing!

When the on-load tap-changer undertakes a tap-change operation, components – some of which are freely accessible – move on the selector, change-over selector, and potential connection unit. Reaching into the selector, change-over selector, or potential connection unit during a tap-change operation may result in serious injuries.

- Keep at a safe distance of at least 1 m during tap-change operations.
- Do not reach into the selector, change-over selector, or potential connection unit during tap-change operations.
- Do not switch the on-load tap-changer during work on the selector, change-over selector, or potential connection unit.

## 5.1 Preparatory work

Perform the work stated below before installing the on-load tap-changer in the transformer.

### 5.1.1 Fitting mounting flange on transformer cover

A mounting flange is required for fitting the on-load tap-changer head on the transformer cover. This can be supplied as an option or can be produced by the customer. Mounting flanges made by the customer must comply with the installation drawings in the appendix.

- *NOTICE!* Fit mounting flange on transformer cover (pressure tight).Ensure that the sealing face makes complete contact and is not damaged.

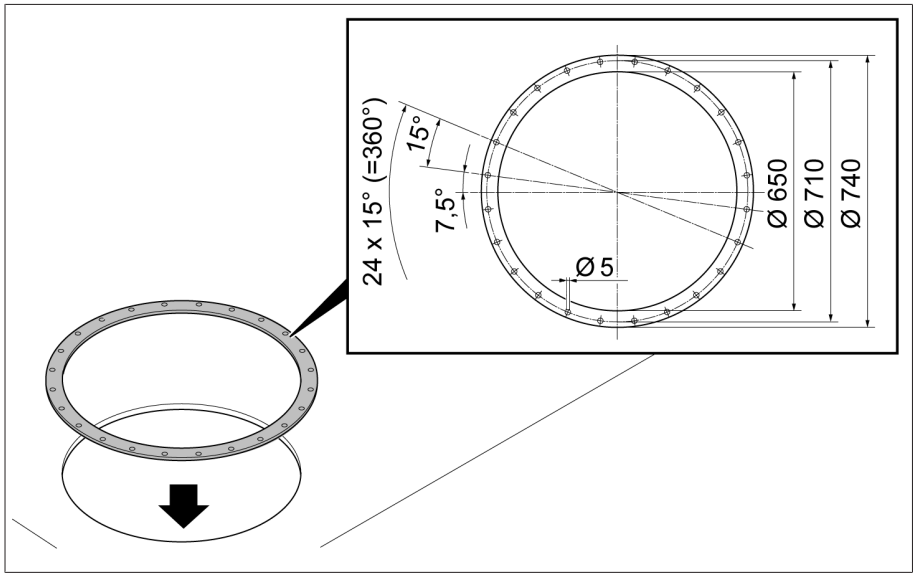


Figure 16: Mounting flange

## 5.1.2 Fitting stud bolts on mounting flange

To attach the stud bolts to the mounting flange, use a tracing template. This can be provided upon request free of charge for the initial installation of the on-load tap-changer.

1. Place tracing template on mounting flange and use the four markings to align.
2. Fit stud bolts on mounting flange.

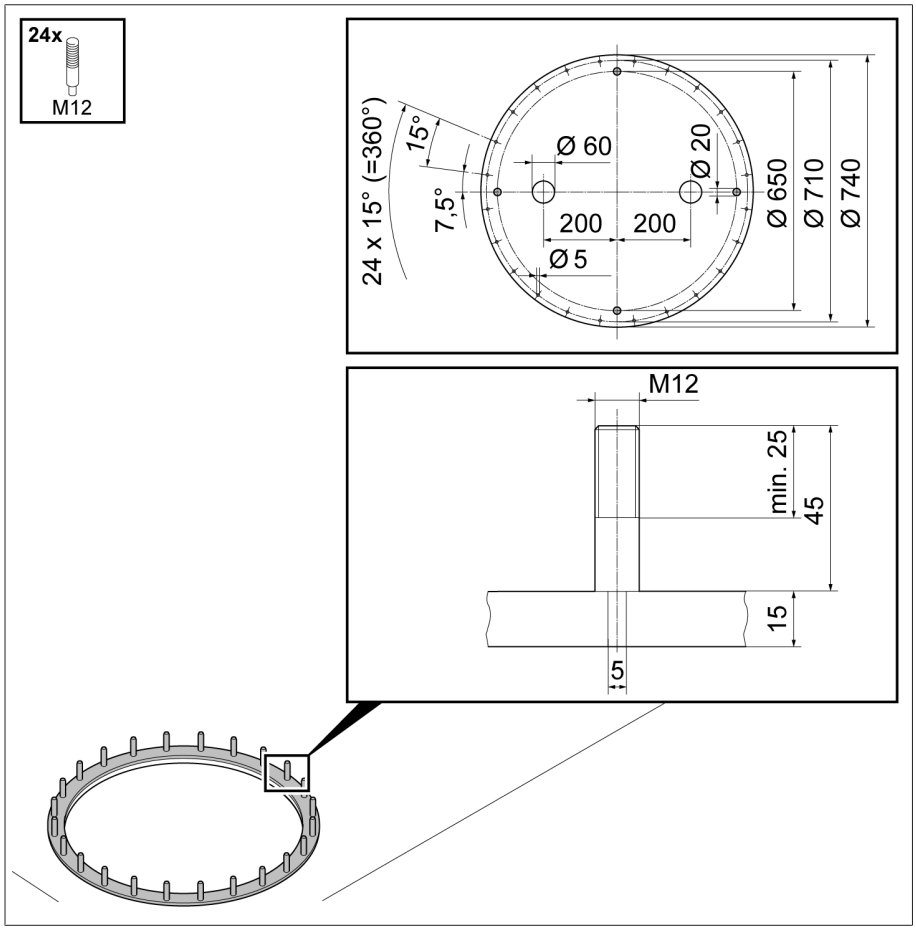


Figure 17: Tracing template, stud bolts

## 5.2 Installing the on-load tap-changer in the transformer (standard version)

### 5.2.1 Fastening on-load tap-changer to transformer cover

> Note that only on-load tap-changers with an unscrewed supporting flange can be fitted in a transformer with the standard design.

#### 5.2.1.1 Lifting top part of on-load tap-changer head off supporting flange (bottom part)

*NOTICE*

**Damage to the on-load tap-changer!**

Small parts in the oil compartment may block the diverter switch insert, thereby damaging the on-load tap-changer.

- Ensure that parts do not fall into the oil compartment.
- Check that all small parts are accounted for.

1. ⚠ CAUTION! An unstably positioned on-load tap-changer may tip, resulting in serious injuries and damage. Place on-load tap-changer on a level surface and secure it against tipping.
2. Remove red-colored packaging material and transport material from on-load tap-changer.
3. Ensure that the on-load tap-changer is in the adjustment position. The adjustment position is indicated in the on-load tap-changer connection diagram included in delivery.
4. Ensure that the inspection window is sealed off with the cover.
5. Remove screws and locking washers on on-load tap-changer head cover.

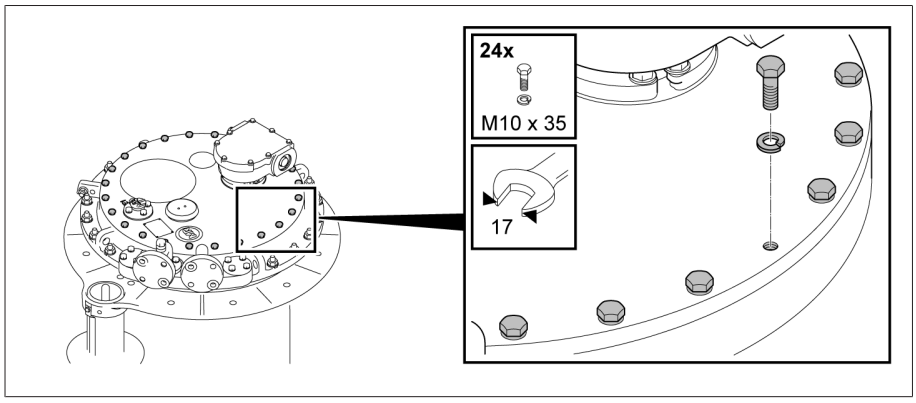


Figure 18: On-load tap-changer head cover

6. Remove on-load tap-changer head cover.

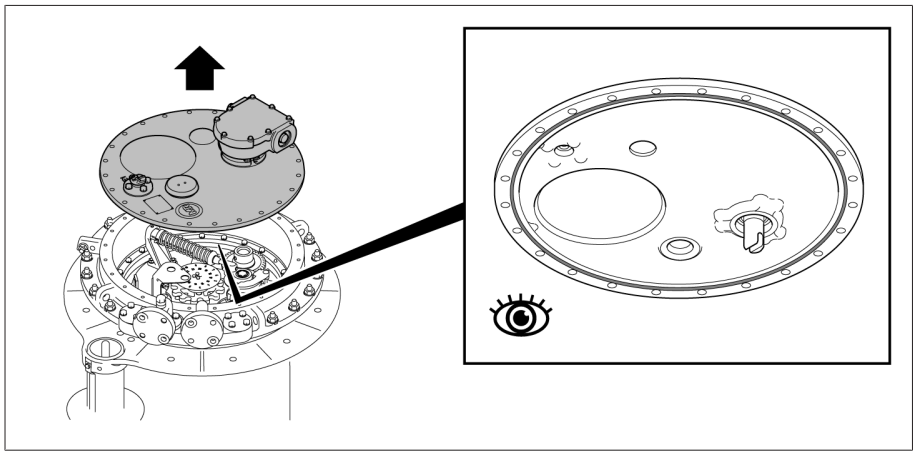

Figure 19: On-load tap-changer head cover

7. For design with oil suction pipe, loosen screw connection of R3/4" oil suction pipe. Check for leaks.

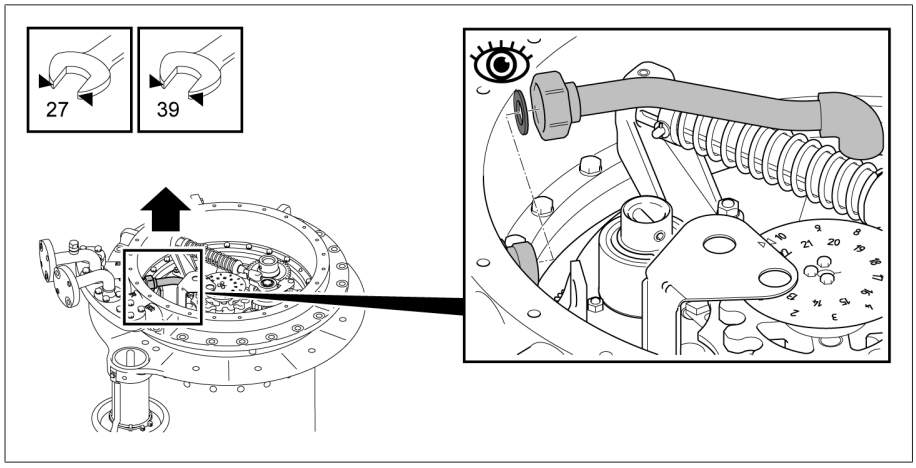


Figure 20: Oil suction pipe

8. Remove bolts and locking washers between top part of on-load tap-changer head and supporting flange.

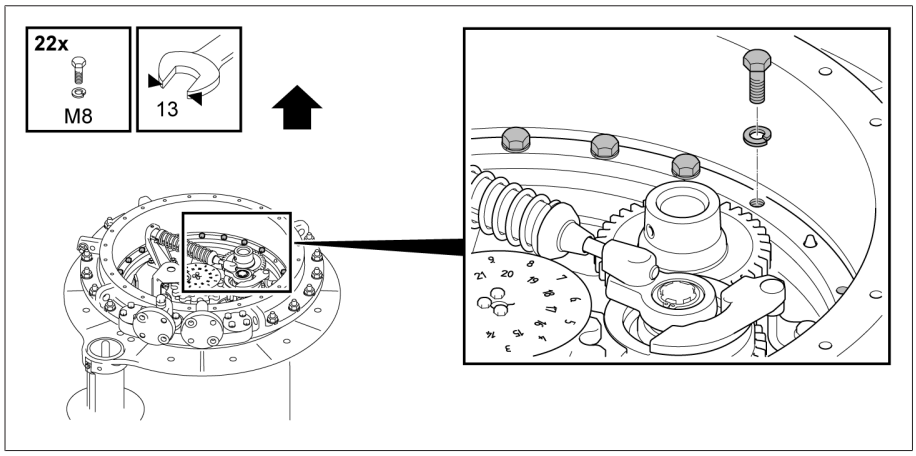


Figure 21: On-load tap-changer head

9. Lift top part of on-load tap-changer head off supporting flange.

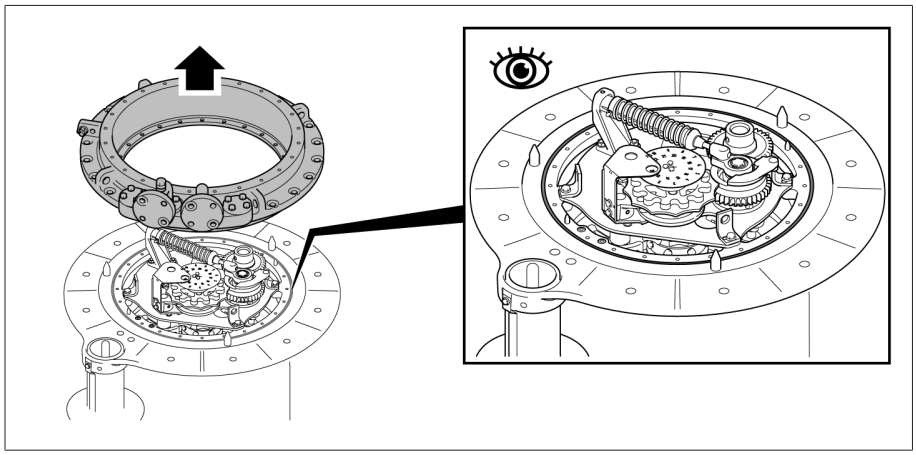

Figure 22: On-load tap-changer head

### 5.2.1.2 Positioning the top part of the on-load tap-changer head on the transformer cover

1. Clean sealing surfaces on mounting flange and on-load tap-changer head, place oil-resistant gasket on mounting flange.

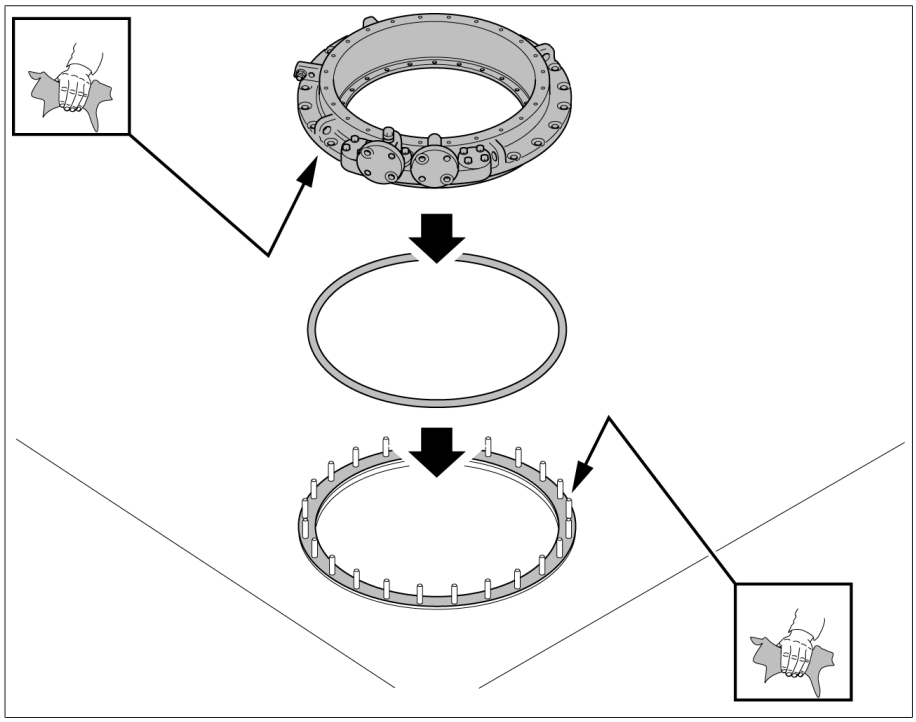

Figure 23: Mounting flange and on-load tap-changer head

2. Position top part of on-load tap-changer head on mounting flange.

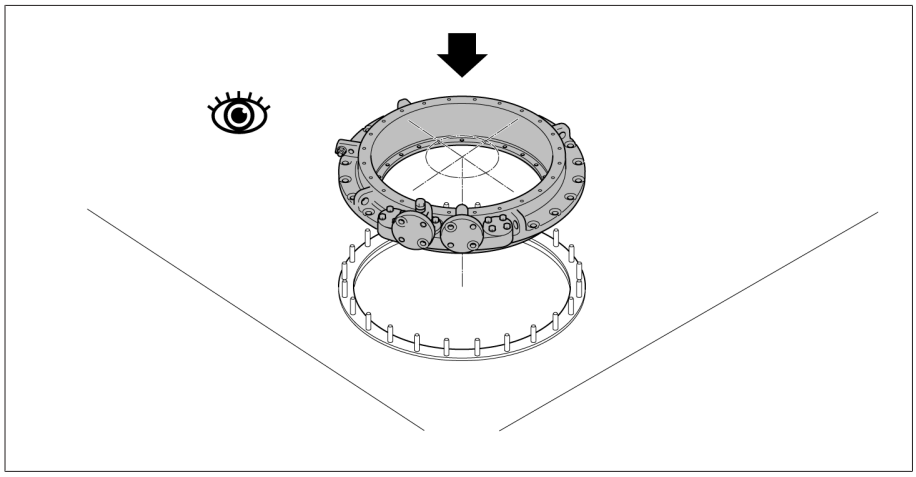

Figure 24: On-load tap-changer head

> For design without oil suction pipe, the on-load tap-changer head can be turned towards the supporting flange in 15° steps. For design with oil suction pipe, turning at 15° increments is not possible.
> When positioning the on-load tap-changer head, do however note that the tap-change supervisory control restricts the swivel range of the upper gear unit.

### 5.2.1.3 Connecting on-load tap-changer to top part of on-load tap-changer head

*NOTICE*

**Damage to the on-load tap-changer!**

A missing or damaged o-ring as well as unclean sealing surfaces lead to insulating fluid escaping and therefore to damage to the on-load tap-changer.

- Ensure that the o-ring is positioned untwisted in the on-load tap-changer head cover.
- Ensure that the o-ring does not become damaged when mounting the cover.
- Ensure that the sealing surfaces on the on-load tap-changer head cover and on-load tap-changer head are clean.

1. *NOTICE!* Incorrectly lifting the on-load tap-changer will damage it. Secure 4 ropes of equal length (at least 1 m in length) to the attachment points provided and slowly lift on-load tap-changer from below towards on-load tap-

changer head. Under no circumstances should the on-load tap-changer be lifted up with the fixing bolts. Ensure that all supporting flange stud bolts go easily through the mounting holes of the on-load tap-changer head.

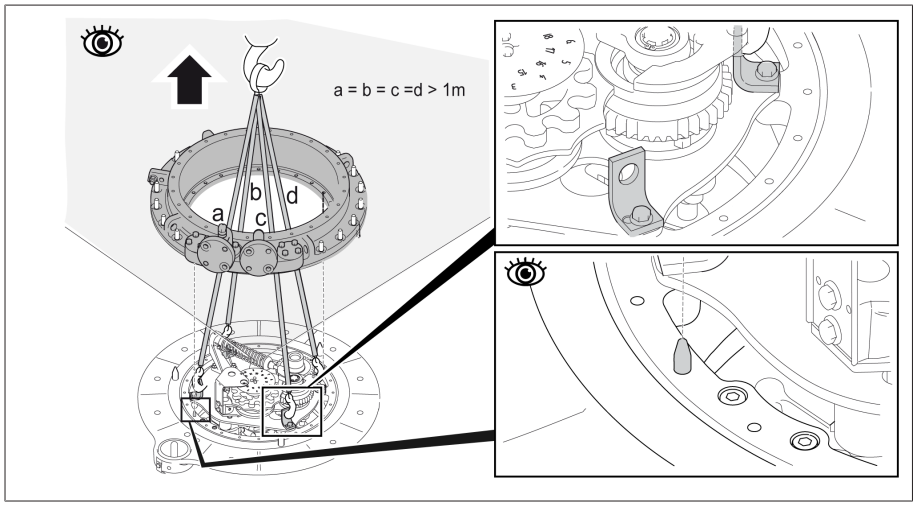


Figure 25: On-load tap-changer

2. Screw the top part to the bottom part of the on-load tap-changer head.

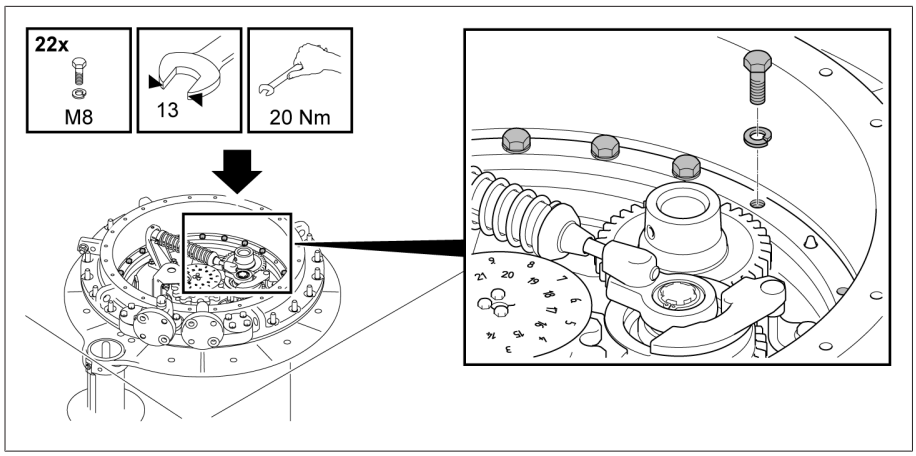


Figure 26: On-load tap-changer head

3. For design with oil suction pipe, connect oil suction pipe screw connection. Check for leaks.

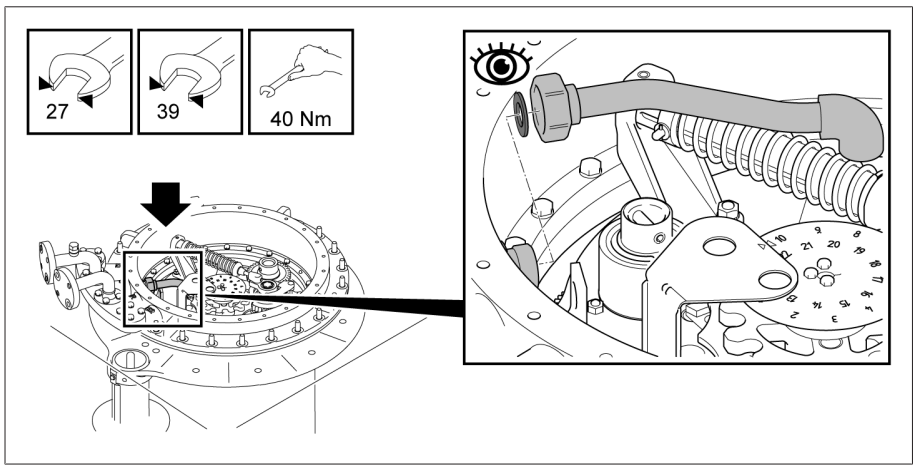


Figure 27: Oil suction pipe

4. Screw the on-load tap-changer head to the mounting flange. The tightening torque depends on the screw connection elements used.

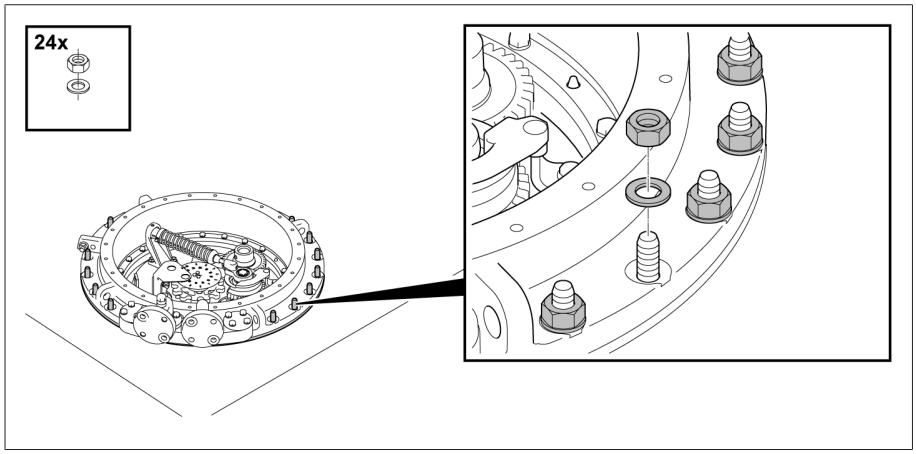


Figure 28: On-load tap-changer head

5. Place on-load tap-changer head cover on on-load tap-changer head and secure.

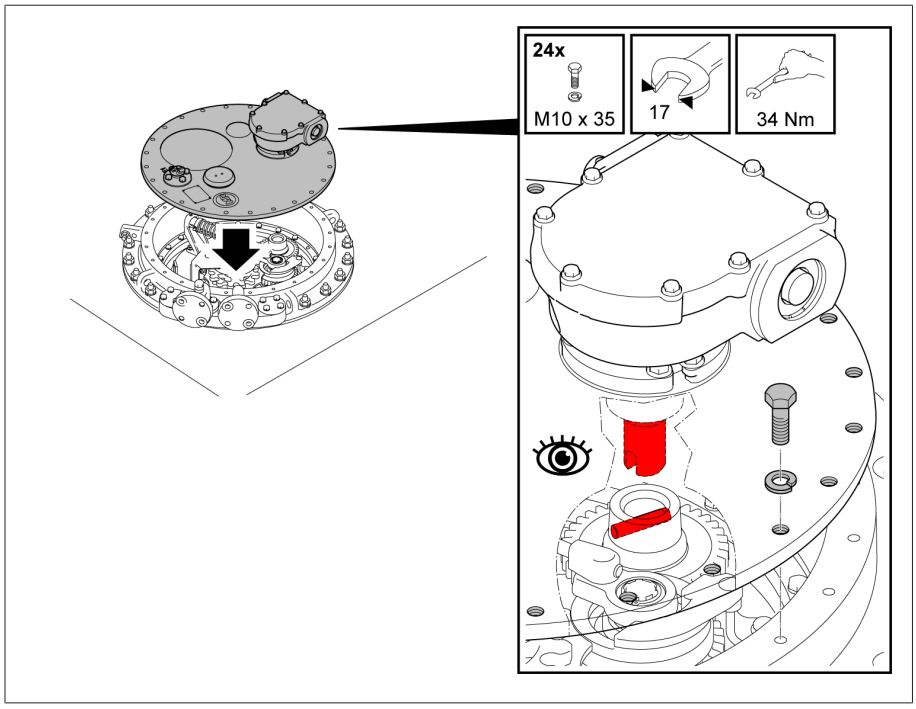


Figure 29: On-load tap-changer head cover

## 5.2.2 Connecting the tap winding and on-load tap-changer take-off lead

*NOTICE*

**Damage to the on-load tap-changer!**

Connecting leads which place mechanical strain on the on-load tap-changer will damage the on-load tap-changer!

- Establish and secure connections with care.
- Do not twist connection contacts.
- Connect connecting leads without warping or deforming.
- If necessary use an expansion loop for connecting leads.

The designations of the on-load tap-changer's connection contacts are shown in the connection diagram. The connection contacts are provided with vertical through-holes (11 mm diameter for M10 screws, see appendix).

1. Connect tap winding and on-load tap-changer take-off lead in accordance with the connection diagram included with the delivery.
2. If connection leads have to cross the open surface of the oil compartment/ change-over selector, there must be a clearance of 50 mm between the connecting leads and the surface of the oil compartment/change-over selector.

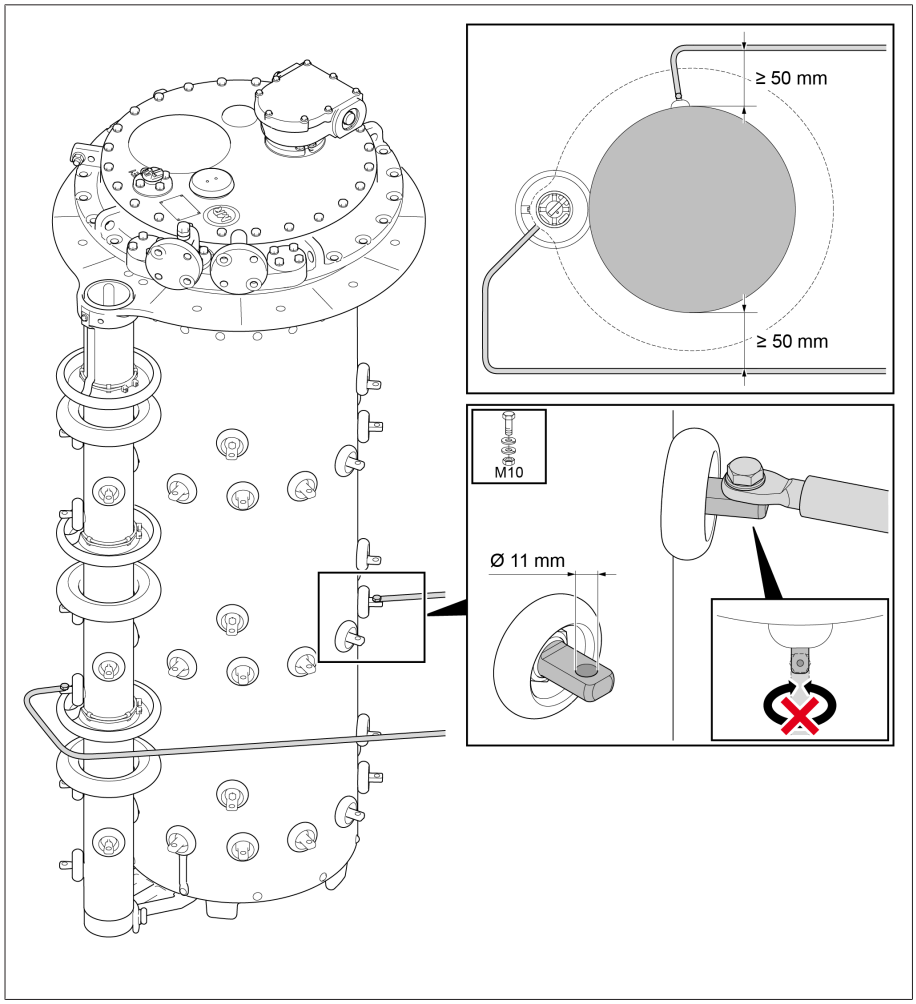


Figure 30: Minimum distance

### 5.2.3 Performing transformer ratio test before drying

NOTICE

**Damage to the on-load tap-changer!**

Damage to the on-load tap-changer due to transformer ratio test being incorrectly performed.

- Do not perform more than 250 tap-change operations on the on-load tap-changer. If more than 250 tap-change operations are to be performed, completely fill the oil compartment with insulating fluid and lubricate sliding surfaces of contacts on the selector and selector gear with insulating fluid.
- Only switch the on-load tap-changer from one operating position to the next via the upper gear unit. You can use a short tube (diameter 25 mm) with screwed-in coupling bolt (diameter 12 mm) with a hand wheel or crank for this, for example. When using a drill, do not exceed a maximum speed of 250 rpm.
- Always check the operating position reached through the inspection window in the on-load tap-changer head cover. Never overshoot the end positions, which are indicated in the connection diagram supplied with the delivery.
- For multiple-column applications with a shared drive, link all on-load tap-changer heads to one another using the horizontal drive shaft parts.

> When actuating the change-over selector, a higher torque is required.

1. Switch the on-load tap-changer into the desired operating position. The diverter switch operation can be heard distinctly.
2. NOTICE! An incomplete tap-change operation may damage the on-load tap-changer. After operating the diverter switch, continue to crank the drive shaft of the upper gear unit for 2.5 revolutions in the same direction in order to correctly complete the tap-change operation.
3. Perform the transformer ratio test.
4. Repeat the transformer ratio test in all operating positions.
5. Switch the on-load tap-changer into adjustment position (see the accompanying connection diagram for the on-load tap-changer).

> After the transformer ratio test, open the kerosene drain plug in the oil compartment if the on-load tap-changer is to be dried with kerosene in the transformer tank. After drying, the diverter switch insert must be removed, the kerosene drain plug in the oil compartment closed and the diverter switch insert refitted.

### 5.2.4 Performing DC resistance measurement on transformer

NOTICE

**Damage to the on-load tap-changer.**

Excessive measurement currents overload the contacts of the on-load tap-changer and thus cause damage to the on-load tap-changer.

- Ensure that the maximum permissible measurement currents specified in the following table are not exceeded.

- Perform the DC resistance measurement in various on-load tap-changer operating positions in accordance with the following table.

| Status of oil compartment | Without interruption of the measured current | With interruption (measured current = 0 A before change of operating position) |
|---|---|---|
| Oil compartment empty | Maximum 10 A DC | Maximum 50 A DC |
| Oil compartment filled with insulating fluid | Maximum 50 A DC | Maximum 50 A DC |

Table 4: Maximum permitted measured currents when performing DC resistance measurement on transformer

## 5.2.5 Drying on-load tap-changer in autoclave

NOTICE

**Damage to the on-load tap-changer!**

Moisture in the oil compartment reduces the dielectric strength of the insulating fluid and thus leads to damage to the on-load tap-changer.

> Within 10 hours of drying, seal off oil compartment with on-load tap-changer head cover.

Dry on-load tap-changer in accordance with the following instructions to ensure the dielectric values assured by MR for the on-load tap-changer.

If drying in an autoclave, the following methods are possible:

- Vacuum drying
- Vapor-phase drying

As an alternative to drying the on-load tap-changer in an autoclave, it can also be dried in the transformer tank.

### 5.2.5.1 Vacuum-drying in the autoclave

> If you wish to perform another transformer ratio test after drying, proceed as described in the section "Performing transformer ratio test following drying" [▶Section 5.2.8, Page 50].

#### 5.2.5.1.1 Moving on-load tap-changer to adjustment position

> Move the on-load tap-changer to the adjustment position. The adjustment position is indicated in the on-load tap-changer connection diagram included in delivery.

#### 5.2.5.1.2 Removing on-load tap-changer head cover

WARNING

**Danger of explosion!**

Explosive gases under the on-load tap-changer head cover can deflagrate or explode and result in severe injury or death.

> Ensure that there are no ignition sources such as open flames, hot surfaces or sparks (e.g. caused by the build-up of static charge) in the immediate surroundings and that none occur.

> De-energize all auxiliary circuits (for example tap-change supervisory device, pressure relief device, pressure monitoring device) before removing the on-load tap-changer head cover.

> Do not operate any electrical devices during the work (e.g. risk of sparks from impact wrench).

NOTICE

**Damage to the on-load tap-changer!**

Small parts in the oil compartment may block the diverter switch insert, thereby damaging the on-load tap-changer.

- Ensure that parts do not fall into the oil compartment.
- Check that all small parts are accounted for.

1. Ensure that the inspection window is sealed off with the cover.
2. Remove the screws and washers from the on-load tap-changer head cover.

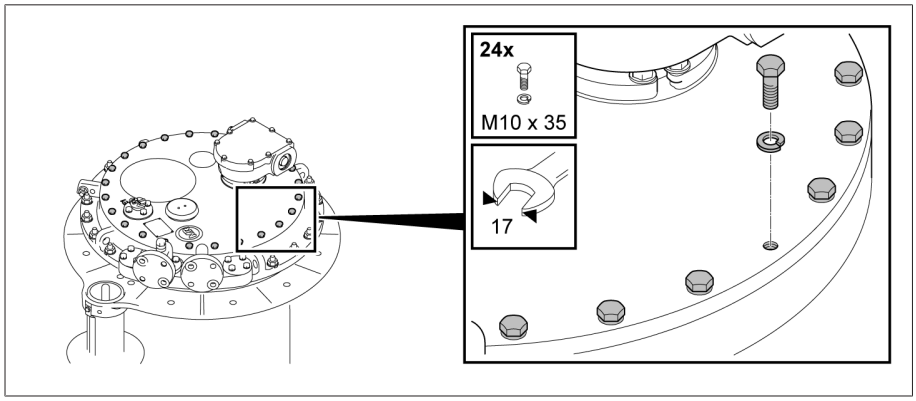


Figure 31: On-load tap-changer head cover

3. Remove on-load tap-changer head cover.

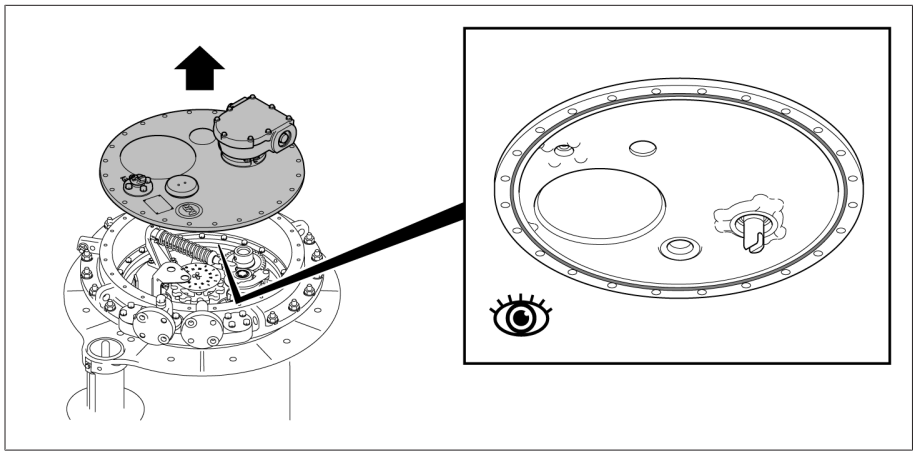

Figure 32: On-load tap-changer head cover

### 5.2.5.1.3 Drying the on-load tap-changer

NOTICE

**Damage to the on-load tap-changer head cover and on-load tap-changer accessories.**

Both the on-load tap-changer head cover and the on-load tap-changer accessories will become damaged if they are dried.

- Never dry the on-load tap-changer head cover or the following accessories: motor-drive unit, drive shaft, protective relay, pressure monitoring device, pressure relief device, bevel gear, sensors such as temperature and humidity sensors or pressure sensors, oil filter unit.

1. Heat up the on-load tap-changer in air at atmospheric pressure with a temperature increase of approximately 10 °C/h to a final temperature of maximum 110 °C.
2. Pre-dry the on-load tap-changer in circulating air at a maximum temperature of 110 °C for a period of at least 20 hours.
3. Vacuum-dry on-load tap-changer at between 105 °C and maximum 125 °C for at least 50 hours.
4. Residual pressure of no more than $10^{-3}$ bar.

#### 5.2.5.1.4 Securing on-load tap-changer head cover

NOTICE

**Damage to the on-load tap-changer!**

A missing or damaged o-ring as well as unclean sealing surfaces lead to insulating fluid escaping and therefore to damage to the on-load tap-changer.

- Ensure that the o-ring is positioned untwisted in the on-load tap-changer head cover.
- Ensure that the o-ring does not become damaged when mounting the cover.
- Ensure that the sealing surfaces on the on-load tap-changer head cover and on-load tap-changer head are clean.

- Place on-load tap-changer head cover on on-load tap-changer head and secure.

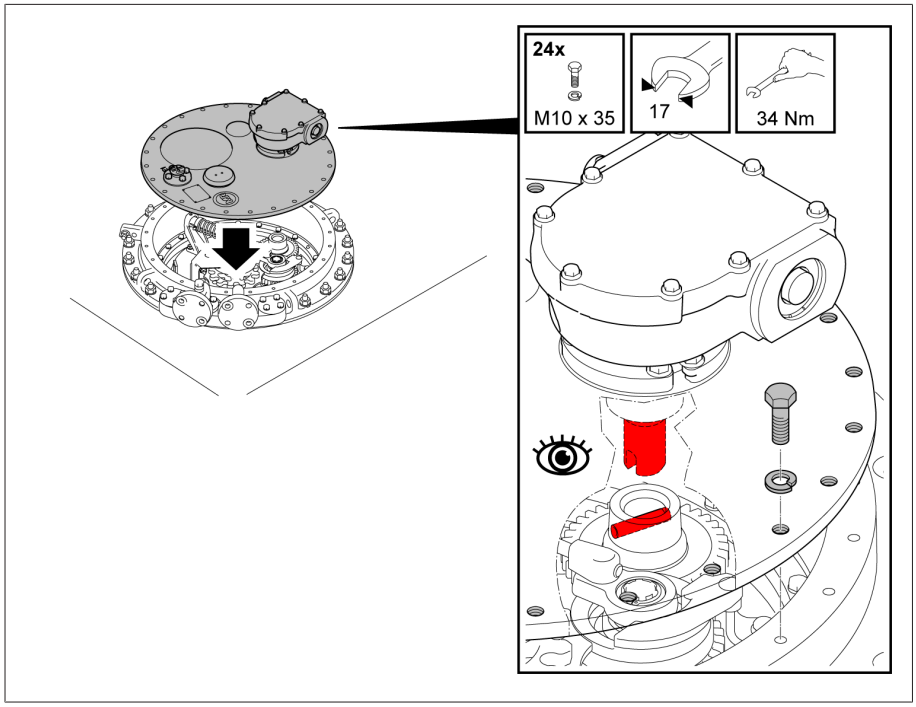


Figure 33: On-load tap-changer head cover

### 5.2.5.2 Vapor-phase drying in the autoclave

> If you wish to perform another transformer ratio test after drying, proceed as described in the section "Performing transformer ratio test following drying" [▶Section 5.2.8, Page 50].

#### 5.2.5.2.1 Moving on-load tap-changer to adjustment position

- Move the on-load tap-changer to the adjustment position. The adjustment position is indicated in the on-load tap-changer connection diagram included in delivery.

### 5.2.5.2.2 Removing on-load tap-changer head cover

**⚠ WARNING**

**Danger of explosion!**

Explosive gases under the on-load tap-changer head cover can deflagrate or explode and result in severe injury or death.

- Ensure that there are no ignition sources such as open flames, hot surfaces or sparks (e.g. caused by the build-up of static charge) in the immediate surroundings and that none occur.
- De-energize all auxiliary circuits (for example tap-change supervisory device, pressure relief device, pressure monitoring device) before removing the on-load tap-changer head cover.
- Do not operate any electrical devices during the work (e.g. risk of sparks from impact wrench).

*NOTICE*

**Damage to the on-load tap-changer!**

Small parts in the oil compartment may block the diverter switch insert, thereby damaging the on-load tap-changer.

- Ensure that parts do not fall into the oil compartment.
- Check that all small parts are accounted for.

1. Ensure that the inspection window is sealed off with the cover.
2. Remove the screws and washers from the on-load tap-changer head cover.

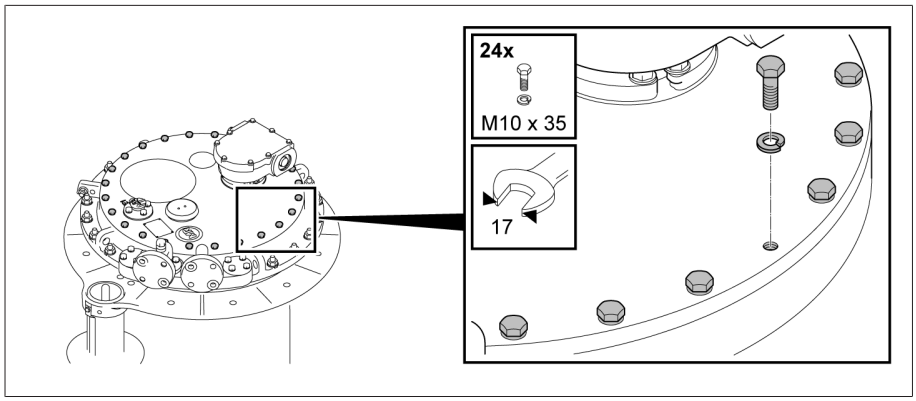


Figure 34: On-load tap-changer head cover

3. Remove on-load tap-changer head cover.

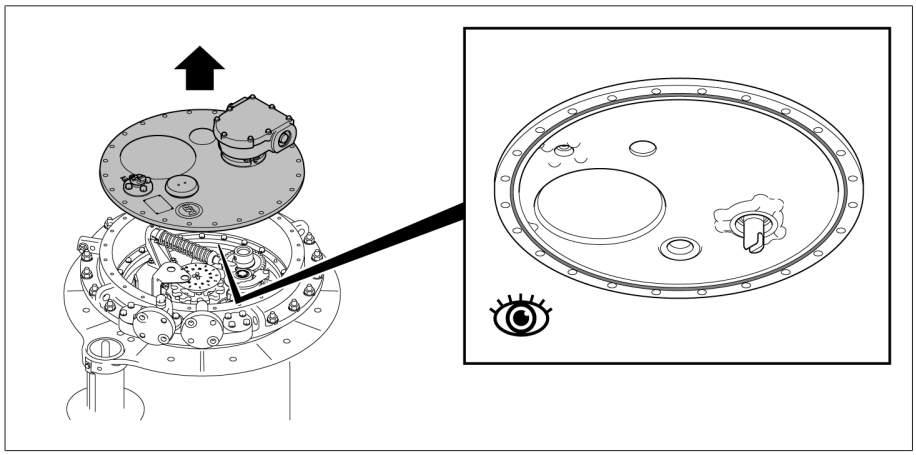

Figure 35: On-load tap-changer head cover

### 5.2.5.2.3 Opening kerosene drain plug

- *NOTICE!* Never remove the kerosene drain plug completely. Open kerosene drain plug in base of oil compartment counter-clockwise.

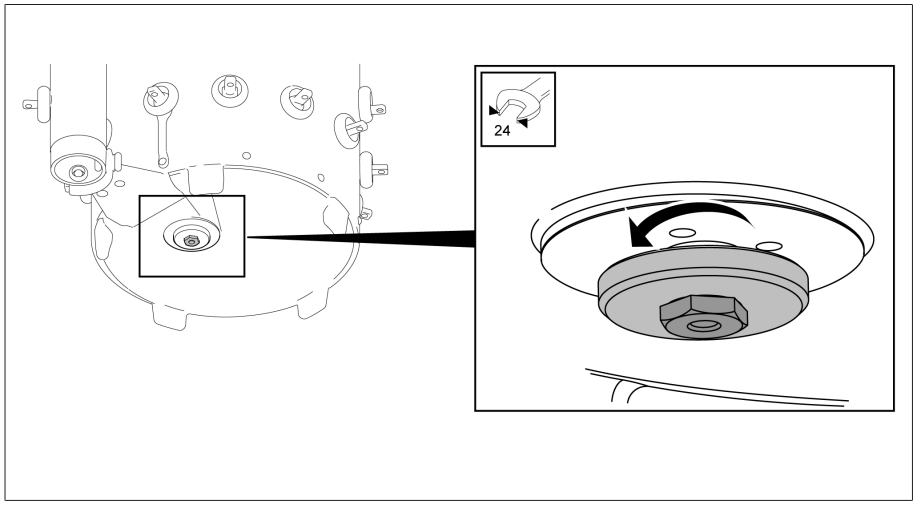


Figure 36: Kerosene drain plug

#### 5.2.5.2.4 Drying the on-load tap-changer

NOTICE

**Damage to the on-load tap-changer head cover and on-load tap-changer accessories.**

Both the on-load tap-changer head cover and the on-load tap-changer accessories will become damaged if they are dried.

- Never dry the on-load tap-changer head cover or the following accessories: motor-drive unit, drive shaft, protective relay, pressure monitoring device, pressure relief device, bevel gear, sensors such as temperature and humidity sensors or pressure sensors, oil filter unit.

1. Supply kerosene vapor at a temperature of around 90°C. Keep this temperature constant for 3 to 4 hours.
2. Increase the kerosene vapor temperature by approx. 10°C/hour to the desired final temperature of max. 125°C at the on-load tap-changer.
3. Vacuum-dry on-load tap-changer at between 105°C and maximum 125°C for at least 50 hours.
4. Residual pressure of no more than $10^{-3}$ bar.

#### 5.2.5.2.5 Closing kerosene drain plug

- *NOTICE!* An open kerosene drain plug leads to insulating fluid escaping from the oil compartment and therefore to damage to the on-load tap-changer. Close kerosene drain plug (tightening torque 39 Nm).

#### 5.2.5.2.6 Securing on-load tap-changer head cover

NOTICE

**Damage to the on-load tap-changer!**

A missing or damaged o-ring as well as unclean sealing surfaces lead to insulating fluid escaping and therefore to damage to the on-load tap-changer.

- Ensure that the o-ring is positioned untwisted in the on-load tap-changer head cover.
- Ensure that the o-ring does not become damaged when mounting the cover.
- Ensure that the sealing surfaces on the on-load tap-changer head cover and on-load tap-changer head are clean.

> Place on-load tap-changer head cover on on-load tap-changer head and secure.

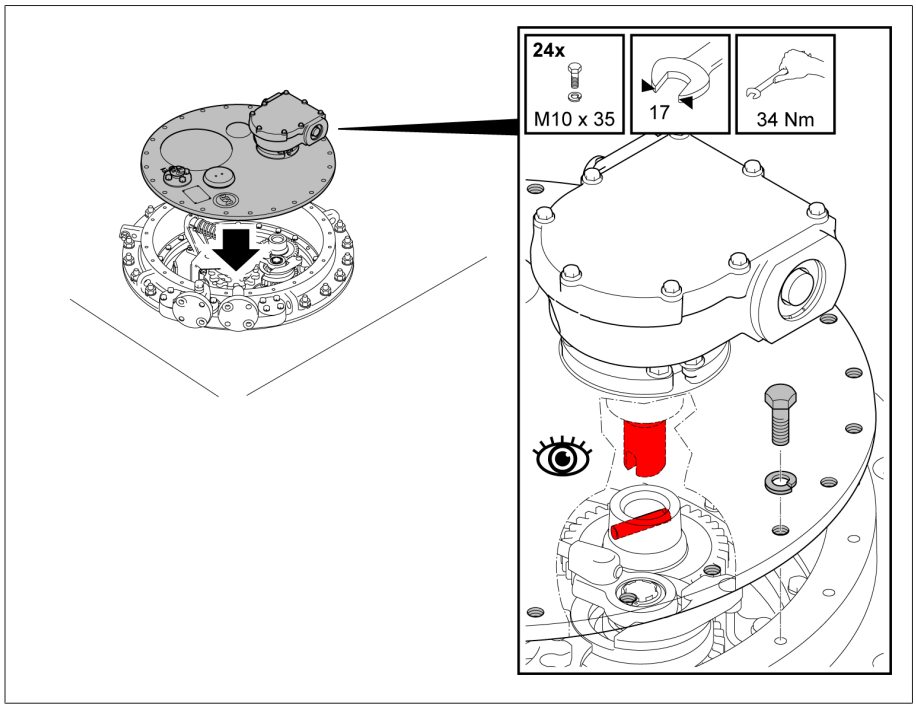


Figure 37: On-load tap-changer head cover

## 5.2.6 Drying on-load tap-changer in transformer tank

Dry on-load tap-changer in accordance with the following instructions to ensure the dielectric values assured by MR on the on-load tap-changer.

If you want to dry the on-load tap-changer in the transformer tank, fully assemble the transformer first and then undertake drying.

If drying in the transformer tank, the following methods are possible:
- Vacuum-drying
- Vapor-phase drying

As an alternative to drying the on-load tap-changer in the transformer tank, it can also be dried in an autoclave.

### 5.2.6.1 Vacuum-drying in the transformer tank

> The on-load tap-changer head cover remains closed during the entire drying process.

1. Establish a connecting lead between either connections E2 and Q or connections E2 and R on the on-load tap-changer head.
2. Seal off unused pipe connections and pipe bends with a suitable blank cover.

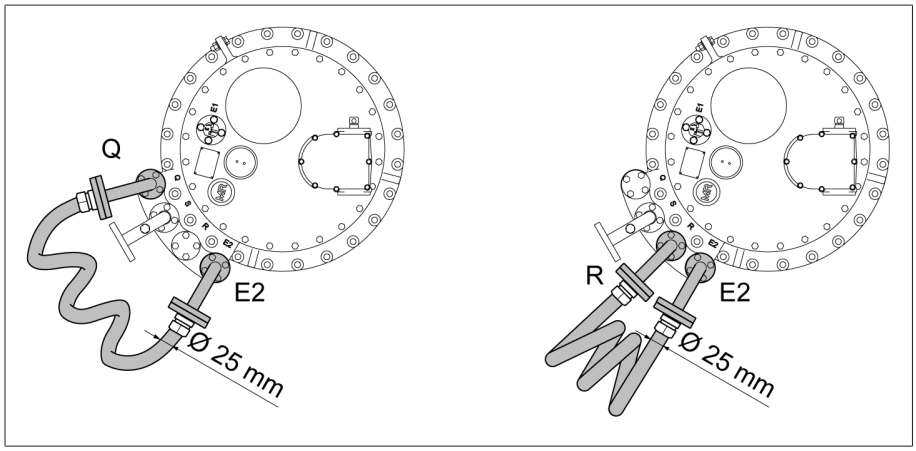


Figure 38: Connecting lead

### Vacuum-drying in the transformer tank

1. Heat up the on-load tap-changer in air at atmospheric pressure with a temperature increase of approximately 10 °C/h to a final temperature of maximum 110 °C.
2. Pre-dry the on-load tap-changer in circulating air at a maximum temperature of 110 °C for a period of at least 20 hours.
3. Vacuum-dry on-load tap-changer at between 105 °C and maximum 125 °C for at least 50 hours.
4. Residual pressure of no more than $10^{-3}$ bar.

## 5.2.6.2 Vapor-phase drying in the transformer tank

If you have opened the kerosene drain plug already (e.g. after the transformer ratio test), you can begin the drying right away.

Otherwise, you first have to open the kerosene drain plug before you can begin the drying.

1. Remove on-load tap-changer insert. Please request the documents for removal from Maschinenfabrik Reinhausen GmbH.
2. Unscrew kerosene drain plug in base of oil compartment clockwise. The kerosene drain plug cannot be unscrewed all the way.

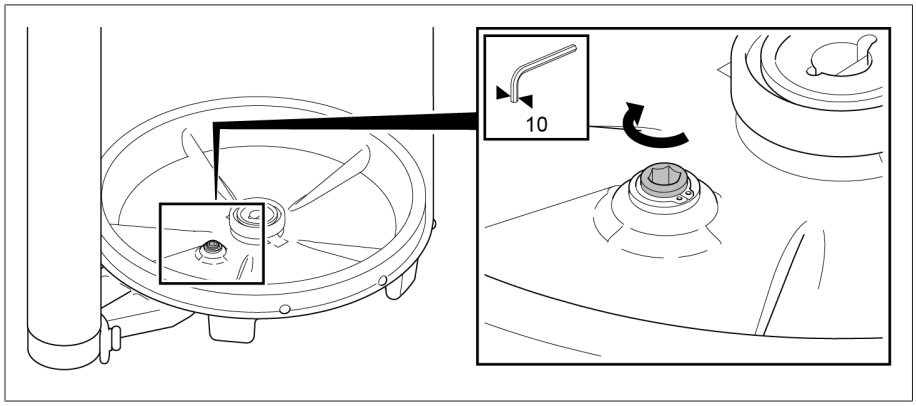


Figure 39: Kerosene drain plug

3. Insert on-load tap-changer insert. Please request the documents for installation from Maschinenfabrik Reinhausen GmbH.

4. Connect pipe connections R and Q of on-load tap-changer head to the kerosene vapor lead using one shared lead.

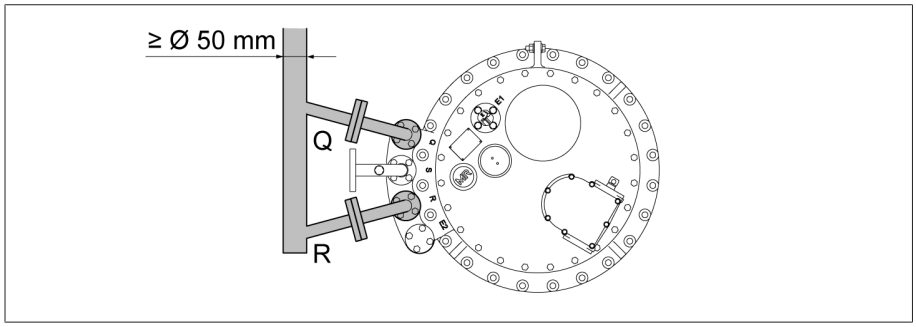


Figure 40: Kerosene vapor lead

5. Seal off unused pipe connections and pipe bends with a suitable blank cover.

### Vapor-phase drying in the transformer tank

1. Supply kerosene vapor at a temperature of around 90°C. Keep this temperature constant for 3 to 4 hours.
2. Increase the kerosene vapor temperature by approx. 10°C/hour to the desired final temperature of max. 125°C at the on-load tap-changer.
3. Vacuum-dry on-load tap-changer at between 105°C and maximum 125°C for at least 50 hours.
4. Residual pressure of no more than $10^{-3}$ bar.

After drying, proceed as follows to close the kerosene drain plug again:

1. Remove on-load tap-changer insert.
2. *NOTICE!* An open kerosene drain plug leads to oil escaping from the oil compartment and therefore to damage to the on-load tap-changer. Close kerosene drain plug counter-clockwise (tightening torque 39 Nm).
3. Insert on-load tap-changer insert.

## 5.2.7 Filling the oil compartment of the on-load tap-changer with insulating fluid

*NOTICE*

**Damage to the on-load tap-changer!**

Unsuitable insulating fluids cause damage to the on-load tap-changer.

› Only use insulating fluids [►Section 8.1.2, Page 154] approved by the manufacturer.

After drying, completely fill the oil compartment (diverter switch insert fitted) with insulating fluid again as soon as possible so that an impermissible amount of humidity is not absorbed from the surroundings.

1. Establish a connecting lead between pipe connection E2 and one of the pipe connections R, S or Q to ensure equal pressure in the oil compartment and transformer during evacuation.

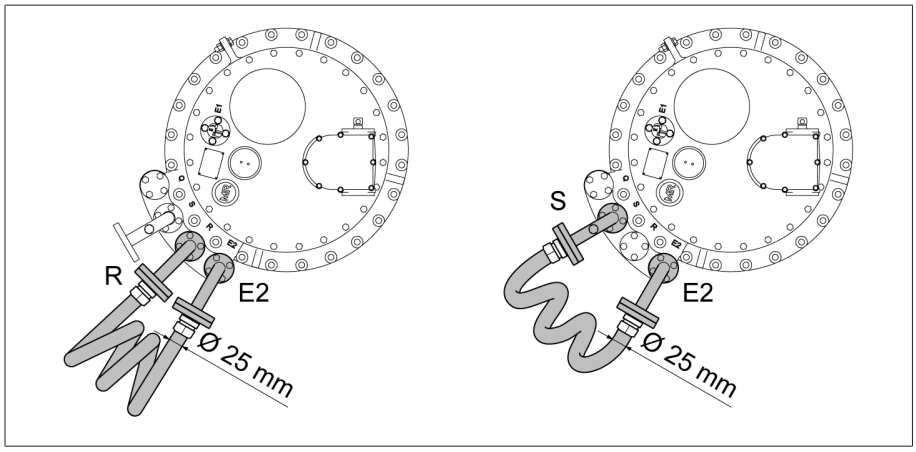


Figure 41: Connecting lead between E2 and Q

2. Fill on-load tap-changer with new insulating fluid using one of the two free pipe connections of the on-load tap-changer head.

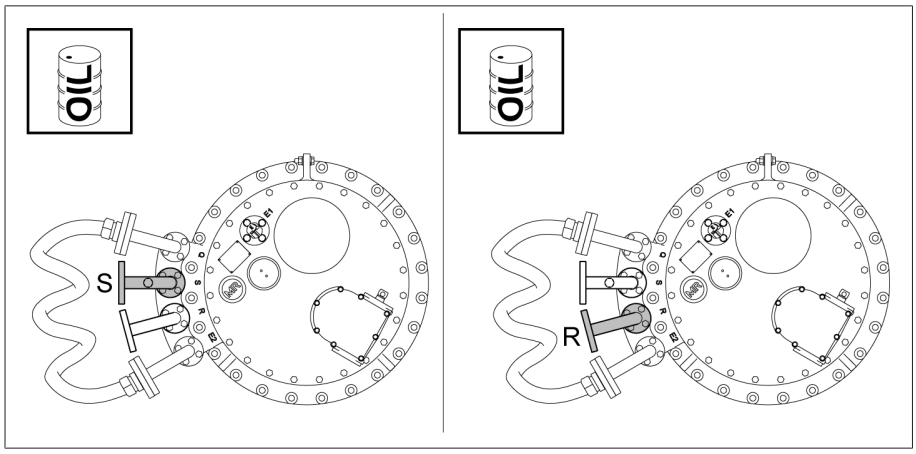


Figure 42: Pipe connections S and R

### 5.2.8 Performing transformer ratio test after drying

NOTICE

**Damage to the on-load tap-changer!**

Damage to the on-load tap-changer due to transformer ratio test being incorrectly performed.

- Ensure that the selector / de-energized tap changer is fully immersed in the insulating fluid and that the oil compartment of the on-load tap-changer is completely filled with insulating fluid.
- Only switch the on-load tap-changer from one operating position to the next via the upper gear unit. You can use a short tube (diameter 25 mm) with screwed-in coupling bolt (diameter 12 mm) with a hand wheel or crank for this, for example. When using a drill, do not exceed a maximum speed of 250 rpm.
- Always check the operating position reached through the inspection window in the on-load tap-changer head cover. Never overshoot the end positions, which are indicated in the connection diagram supplied with the delivery.
- For multiple-column applications with a shared drive, link all on-load tap-changer heads to one another using the horizontal drive shaft part.

i

When actuating the change-over selector, a higher torque is required.

1. Switch the on-load tap-changer into the desired operating position. The diverter switch operation can be heard distinctly.
2. *NOTICE!* An incomplete tap-change operation may damage the on-load tap-changer. After operating the diverter switch, continue to crank the drive shaft of the upper gear unit for 2.5 revolutions in the same direction in order to correctly complete the tap-change operation.
3. Perform the transformer ratio test.
4. Repeat the transformer ratio test in all operating positions.
5. Switch the on-load tap-changer into adjustment position (see the accompanying connection diagram for the on-load tap-changer).

## 5.3 Installing on-load tap-changer in transformer (bell-type tank version)

### 5.3.1 Inserting on-load tap-changer into supporting structure

1. Remove the red-colored packaging material and the transport material from the on-load tap-changer.
2. *NOTICE!* Tensile forces can lead to damage and malfunctions on the on-load tap-changer. Using spacers, insert on-load tap-changer vertically into supporting structure (maximum 1° deviation from the vertical) so that the on-load tap-changer reaches its final installation height and only has to be raised a maximum of 5 to 20 mm after fitting the bell-type tank.

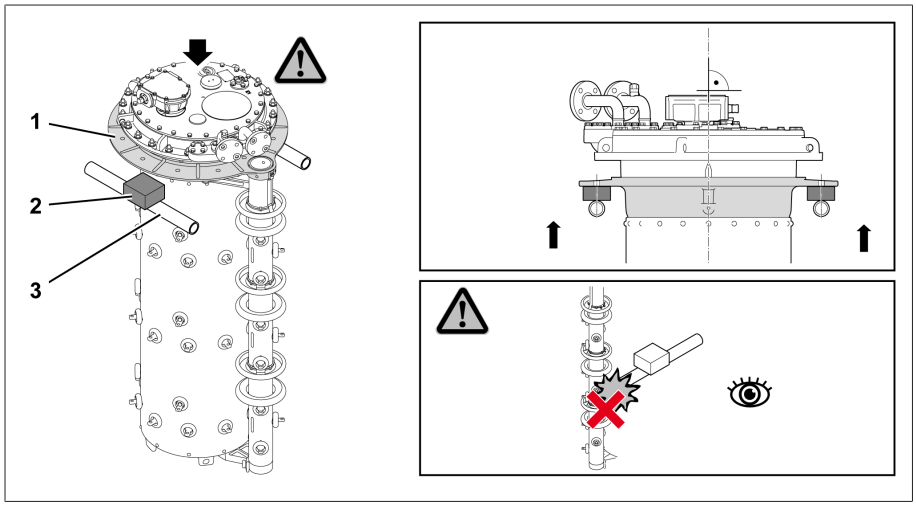


Figure 43: Supporting structure

| | | | |
|---|---|---|---|
| 1 | Supporting flange | 2 | Spacer |
| 3 | Supporting structure | | |

3. Temporarily fasten the on-load tap-changer to the supporting structure. The supporting flange has through holes for this purpose.

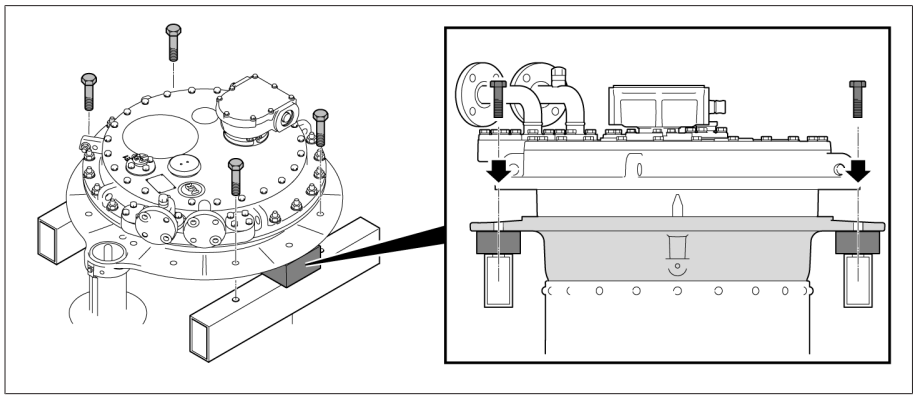

Figure 44: Temporary fastening

## 5.3.2 Connecting the tap winding and on-load tap-changer take-off lead

NOTICE

**Damage to the on-load tap-changer!**

Connecting leads which place mechanical strain on the on-load tap-changer will damage the on-load tap-changer!

- Establish and secure connections with care.
- Do not twist connection contacts.
- Connect connecting leads without warping or deforming.
- If necessary use an expansion loop for connecting leads.

The designations of the on-load tap-changer's connection contacts are shown in the connection diagram. The connection contacts are provided with vertical through-holes (11 mm diameter for M10 screws, see appendix).

1. Connect tap winding and on-load tap-changer take-off lead in accordance with the connection diagram included with the delivery.
2. If connection leads have to cross the open surface of the oil compartment/ change-over selector, there must be a clearance of 50 mm between the connecting leads and the surface of the oil compartment/change-over selector.

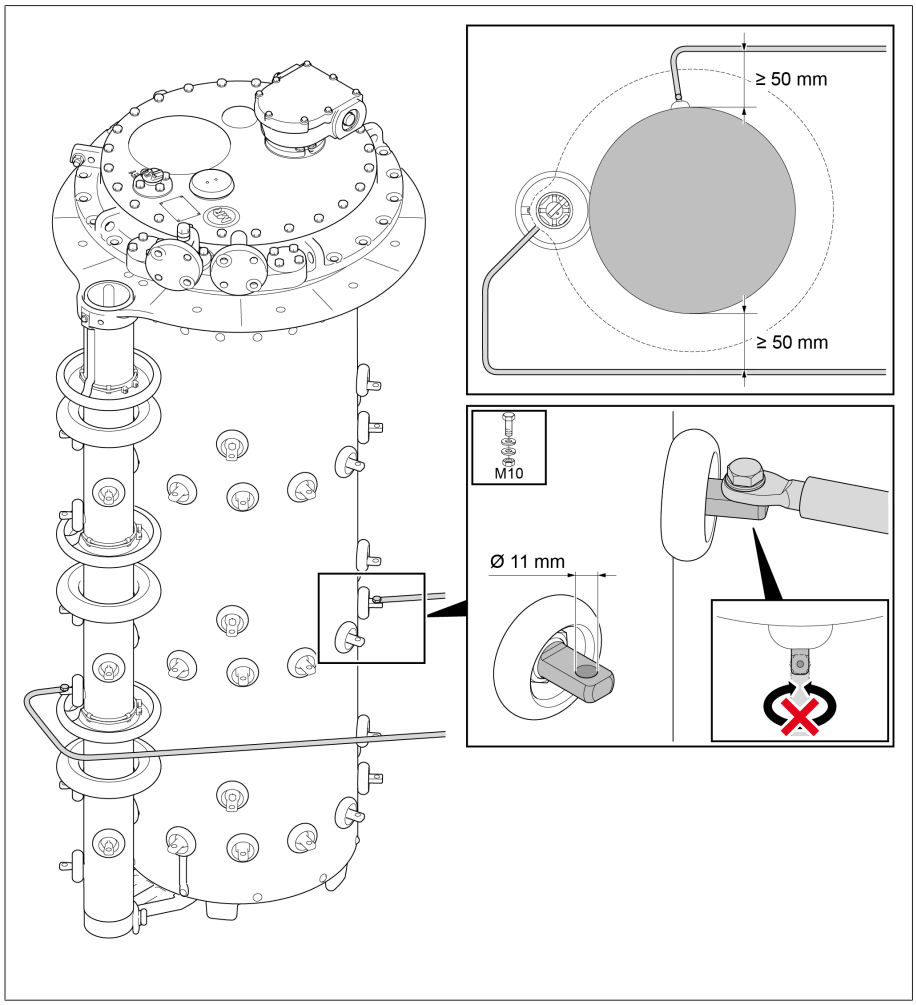


Figure 45: Minimum distance

### 5.3.3 Performing transformer ratio test before drying

NOTICE

**Damage to the on-load tap-changer!**

Damage to the on-load tap-changer due to transformer ratio test being incorrectly performed.

- Do not perform more than 250 tap-change operations on the on-load tap-changer. If more than 250 tap-change operations are to be performed, completely fill the oil compartment with insulating fluid and lubricate sliding surfaces of contacts on the selector and selector gear with insulating fluid.
- Only switch the on-load tap-changer from one operating position to the next via the upper gear unit. You can use a short tube (diameter 25 mm) with screwed-in coupling bolt (diameter 12 mm) with a hand wheel or crank for this, for example. When using a drill, do not exceed a maximum speed of 250 rpm.
- Always check the operating position reached through the inspection window in the on-load tap-changer head cover. Never overshoot the end positions, which are indicated in the connection diagram supplied with the delivery.
- For multiple-column applications with a shared drive, link all on-load tap-changer heads to one another using the horizontal drive shaft parts.

> When actuating the change-over selector, a higher torque is required.

1. Switch the on-load tap-changer into the desired operating position. The diverter switch operation can be heard distinctly.
2. NOTICE! An incomplete tap-change operation may damage the on-load tap-changer. After operating the diverter switch, continue to crank the drive shaft of the upper gear unit for 2.5 revolutions in the same direction in order to correctly complete the tap-change operation.
3. Perform the transformer ratio test.
4. Repeat the transformer ratio test in all operating positions.
5. Switch the on-load tap-changer into adjustment position (see the accompanying connection diagram for the on-load tap-changer).

> After the transformer ratio test, open the kerosene drain plug in the oil compartment if the on-load tap-changer is to be dried with kerosene in the transformer tank. After drying, the diverter switch insert must be removed, the kerosene drain plug in the oil compartment closed and the diverter switch insert refitted.

### 5.3.4 Performing DC resistance measurement on transformer

NOTICE

**Damage to the on-load tap-changer.**

Excessive measurement currents overload the contacts of the on-load tap-changer and thus cause damage to the on-load tap-changer.

- Ensure that the maximum permissible measurement currents specified in the following table are not exceeded.

- Perform the DC resistance measurement in various on-load tap-changer operating positions in accordance with the following table.

| Status of oil compartment | Without interruption of the measured current | With interruption (measured current = 0 A before change of operating position) |
|---|---|---|
| Oil compartment empty | Maximum 10 A DC | Maximum 50 A DC |
| Oil compartment filled with insulating fluid | Maximum 50 A DC | Maximum 50 A DC |

Table 5: Maximum permitted measured currents when performing DC resistance measurement on transformer

## 5.3.5 Drying on-load tap-changer in autoclave

NOTICE

**Damage to the on-load tap-changer!**

Moisture in the oil compartment reduces the dielectric strength of the insulating fluid and thus leads to damage to the on-load tap-changer.

> Within 10 hours of drying, seal off oil compartment with on-load tap-changer head cover.

Dry on-load tap-changer in accordance with the following instructions to ensure the dielectric values assured by MR for the on-load tap-changer.

If drying in an autoclave, the following methods are possible:

- Vacuum drying
- Vapor-phase drying

As an alternative to drying the on-load tap-changer in an autoclave, it can also be dried in the transformer tank.

### 5.3.5.1 Vacuum-drying in the autoclave

> If you wish to perform another transformer ratio test after drying, proceed as described in the section "Performing transformer ratio test following drying" [▶Section 5.3.10, Page 70].

#### 5.3.5.1.1 Moving on-load tap-changer to adjustment position

> Move the on-load tap-changer to the adjustment position. The adjustment position is indicated in the on-load tap-changer connection diagram included in delivery.

#### 5.3.5.1.2 Removing on-load tap-changer head cover

WARNING

**Danger of explosion!**

Explosive gases under the on-load tap-changer head cover can deflagrate or explode and result in severe injury or death.

> Ensure that there are no ignition sources such as open flames, hot surfaces or sparks (e.g. caused by the build-up of static charge) in the immediate surroundings and that none occur.

> De-energize all auxiliary circuits (for example tap-change supervisory device, pressure relief device, pressure monitoring device) before removing the on-load tap-changer head cover.

> Do not operate any electrical devices during the work (e.g. risk of sparks from impact wrench).

NOTICE

**Damage to the on-load tap-changer!**

Small parts in the oil compartment may block the diverter switch insert, thereby damaging the on-load tap-changer.

- Ensure that parts do not fall into the oil compartment.
- Check that all small parts are accounted for.

1. Ensure that the inspection window is sealed off with the cover.
2. Remove the screws and washers from the on-load tap-changer head cover.

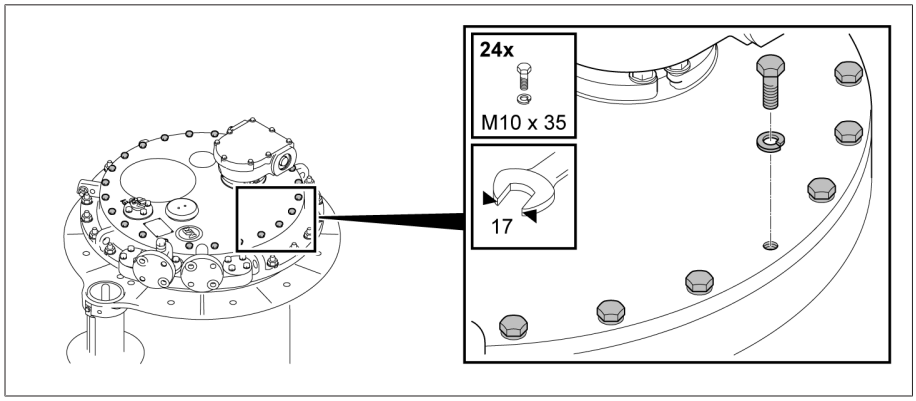


Figure 46: On-load tap-changer head cover

3. Remove on-load tap-changer head cover.

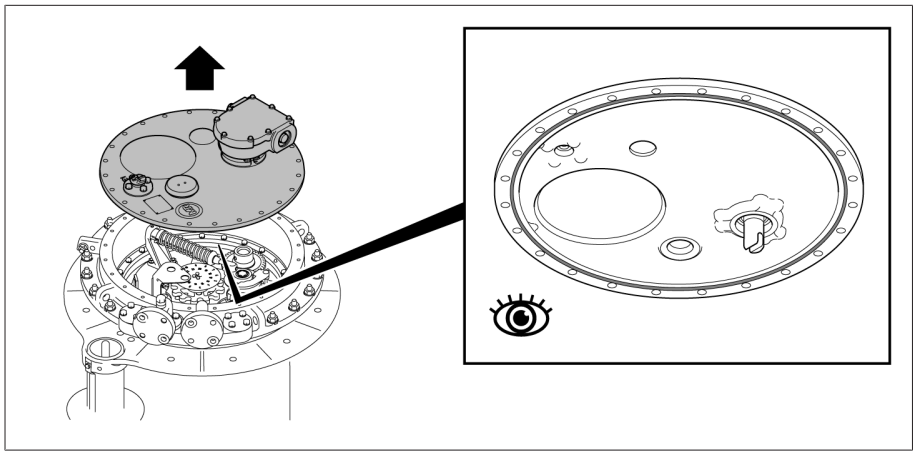

Figure 47: On-load tap-changer head cover

### 5.3.5.1.3 Drying the on-load tap-changer

NOTICE

**Damage to the on-load tap-changer head cover and on-load tap-changer accessories.**

Both the on-load tap-changer head cover and the on-load tap-changer accessories will become damaged if they are dried.

- Never dry the on-load tap-changer head cover or the following accessories: motor-drive unit, drive shaft, protective relay, pressure monitoring device, pressure relief device, bevel gear, sensors such as temperature and humidity sensors or pressure sensors, oil filter unit.

1. Heat up the on-load tap-changer in air at atmospheric pressure with a temperature increase of approximately 10 °C/h to a final temperature of maximum 110 °C.
2. Pre-dry the on-load tap-changer in circulating air at a maximum temperature of 110 °C for a period of at least 20 hours.
3. Vacuum-dry on-load tap-changer at between 105 °C and maximum 125 °C for at least 50 hours.
4. Residual pressure of no more than $10^{-3}$ bar.

#### 5.3.5.1.4 Securing on-load tap-changer head cover

NOTICE

**Damage to the on-load tap-changer!**

A missing or damaged o-ring as well as unclean sealing surfaces lead to insulating fluid escaping and therefore to damage to the on-load tap-changer.

- Ensure that the o-ring is positioned untwisted in the on-load tap-changer head cover.
- Ensure that the o-ring does not become damaged when mounting the cover.
- Ensure that the sealing surfaces on the on-load tap-changer head cover and on-load tap-changer head are clean.

- Place on-load tap-changer head cover on on-load tap-changer head and secure.

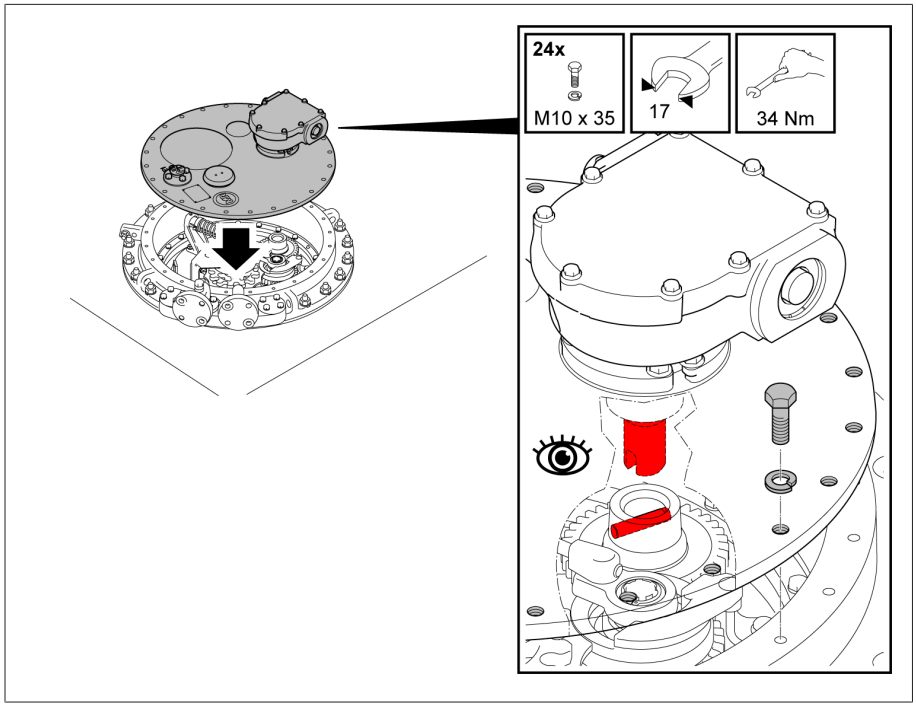


Figure 48: On-load tap-changer head cover

### 5.3.5.2 Vapor-phase drying in the autoclave

> If you wish to perform another transformer ratio test after drying, proceed as described in the section "Performing transformer ratio test following drying" [▶Section 5.3.10, Page 70].

#### 5.3.5.2.1 Moving on-load tap-changer to adjustment position

- Move the on-load tap-changer to the adjustment position. The adjustment position is indicated in the on-load tap-changer connection diagram included in delivery.

### 5.3.5.2.2 Removing on-load tap-changer head cover

**⚠ WARNING**

**Danger of explosion!**

Explosive gases under the on-load tap-changer head cover can deflagrate or explode and result in severe injury or death.

- Ensure that there are no ignition sources such as open flames, hot surfaces or sparks (e.g. caused by the build-up of static charge) in the immediate surroundings and that none occur.
- De-energize all auxiliary circuits (for example tap-change supervisory device, pressure relief device, pressure monitoring device) before removing the on-load tap-changer head cover.
- Do not operate any electrical devices during the work (e.g. risk of sparks from impact wrench).

*NOTICE*

**Damage to the on-load tap-changer!**

Small parts in the oil compartment may block the diverter switch insert, thereby damaging the on-load tap-changer.

- Ensure that parts do not fall into the oil compartment.
- Check that all small parts are accounted for.

1. Ensure that the inspection window is sealed off with the cover.
2. Remove the screws and washers from the on-load tap-changer head cover.

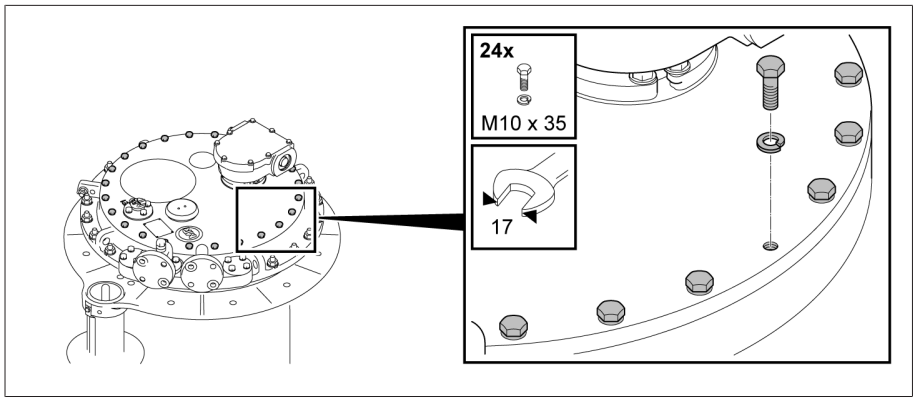


Figure 49: On-load tap-changer head cover

3. Remove on-load tap-changer head cover.

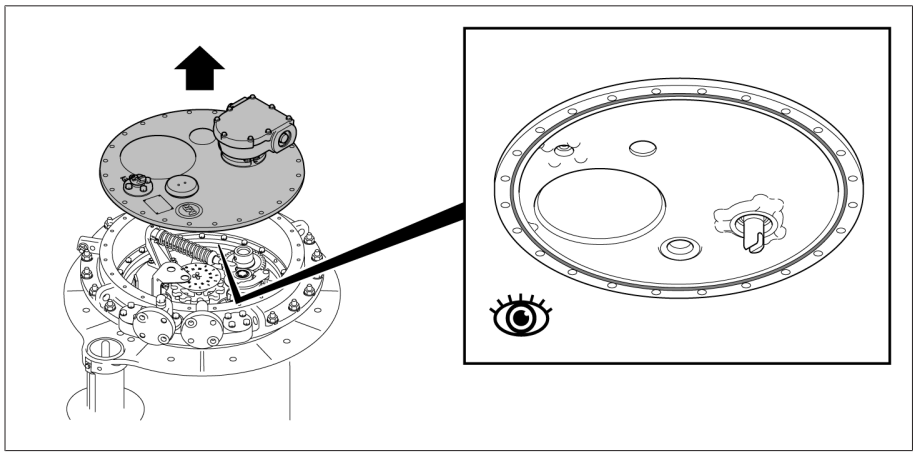

Figure 50: On-load tap-changer head cover

### 5.3.5.2.3 Opening kerosene drain plug

- *NOTICE!* Never remove the kerosene drain plug completely. Open kerosene drain plug in base of oil compartment counter-clockwise.

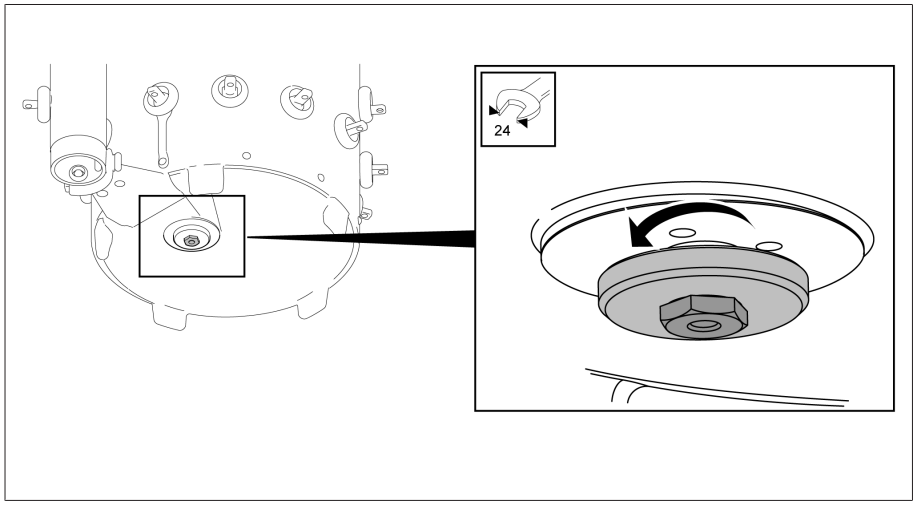


Figure 51: Kerosene drain plug

### 5.3.5.2.4 Drying the on-load tap-changer

NOTICE

**Damage to the on-load tap-changer head cover and on-load tap-changer accessories.**

Both the on-load tap-changer head cover and the on-load tap-changer accessories will become damaged if they are dried.

- Never dry the on-load tap-changer head cover or the following accessories: motor-drive unit, drive shaft, protective relay, pressure monitoring device, pressure relief device, bevel gear, sensors such as temperature and humidity sensors or pressure sensors, oil filter unit.

1. Supply kerosene vapor at a temperature of around 90°C. Keep this temperature constant for 3 to 4 hours.
2. Increase the kerosene vapor temperature by approx. 10°C/hour to the desired final temperature of max. 125°C at the on-load tap-changer.
3. Vacuum-dry on-load tap-changer at between 105°C and maximum 125°C for at least 50 hours.
4. Residual pressure of no more than $10^{-3}$ bar.

### 5.3.5.2.5 Closing kerosene drain plug

- *NOTICE!* An open kerosene drain plug leads to insulating fluid escaping from the oil compartment and therefore to damage to the on-load tap-changer. Close kerosene drain plug (tightening torque 39 Nm).

### 5.3.5.2.6 Securing on-load tap-changer head cover

NOTICE

**Damage to the on-load tap-changer!**

A missing or damaged o-ring as well as unclean sealing surfaces lead to insulating fluid escaping and therefore to damage to the on-load tap-changer.

- Ensure that the o-ring is positioned untwisted in the on-load tap-changer head cover.
- Ensure that the o-ring does not become damaged when mounting the cover.
- Ensure that the sealing surfaces on the on-load tap-changer head cover and on-load tap-changer head are clean.

> Place on-load tap-changer head cover on on-load tap-changer head and secure.

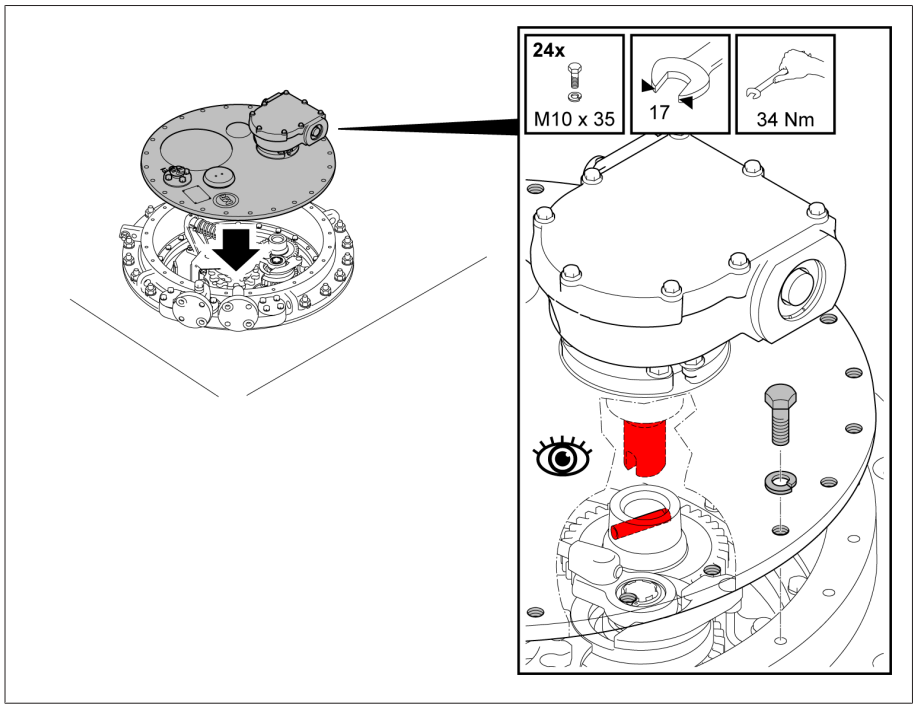


Figure 52: On-load tap-changer head cover

### 5.3.6 Lifting top part of on-load tap-changer head off supporting flange (bottom part)

**WARNING**

**Danger of explosion!**

Explosive gases under the on-load tap-changer head cover can deflagrate or explode and result in severe injury or death.

> Ensure that there are no ignition sources such as open flames, hot surfaces or sparks (e.g. caused by the build-up of static charge) in the immediate surroundings and that none occur.
> De-energize all auxiliary circuits (for example tap-change supervisory device, pressure relief device, pressure monitoring device) before removing the on-load tap-changer head cover.
> Do not operate any electrical devices during the work (e.g. risk of sparks from impact wrench).

*NOTICE*

**Damage to the on-load tap-changer!**

Small parts in the oil compartment may block the diverter switch insert, thereby damaging the on-load tap-changer.

> Ensure that parts do not fall into the oil compartment.
> Check that all small parts are accounted for.

1. Ensure that the on-load tap-changer is in the adjustment position. The adjustment position is indicated in the on-load tap-changer connection diagram included in delivery.
2. Ensure that the inspection window is sealed off with the cover.

3. Remove temporary fastening and spacers and slowly lower the on-load tap-changer.

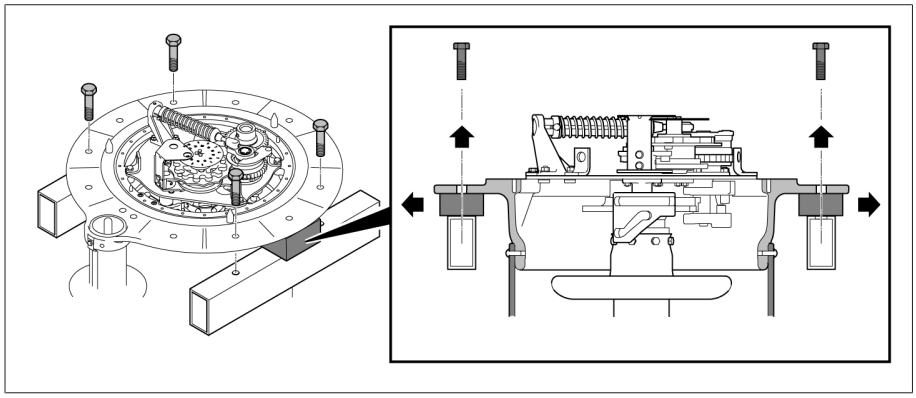

Figure 53: Temporary fastening

4. Remove screws and locking washers on on-load tap-changer head cover.

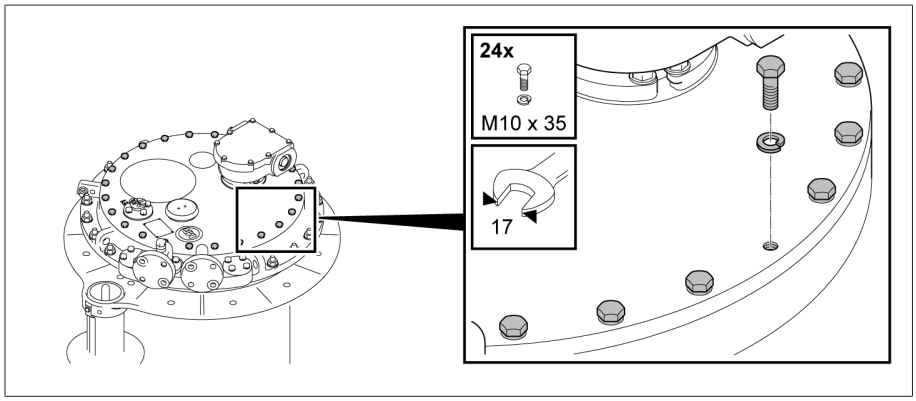


Figure 54: On-load tap-changer head cover

5. Remove on-load tap-changer head cover.

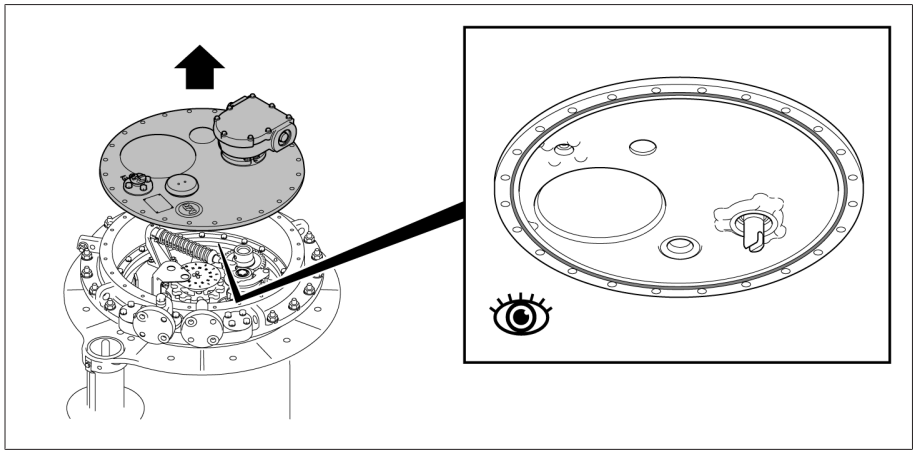

Figure 55: On-load tap-changer head cover

6. For design with oil suction pipe, loosen screw connection of R3/4" oil suction pipe. Check for leaks.

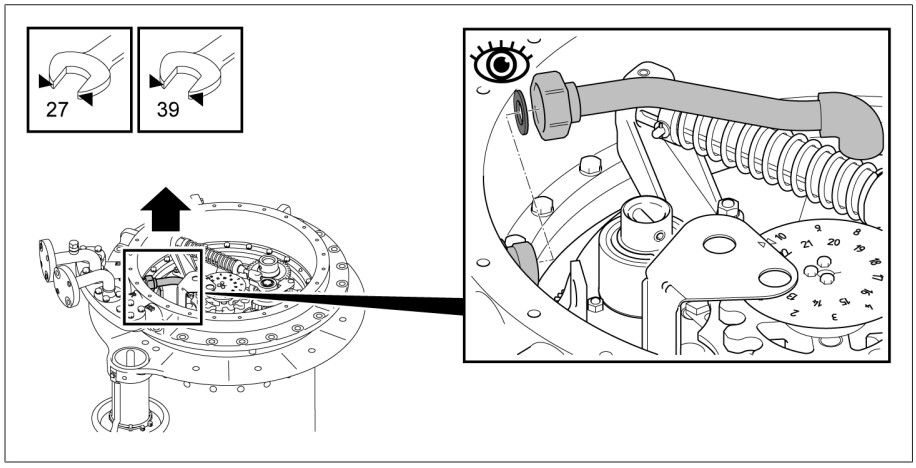


Figure 56: Oil suction pipe

7. Remove bolts and locking washers between top part of on-load tap-changer head and supporting flange.

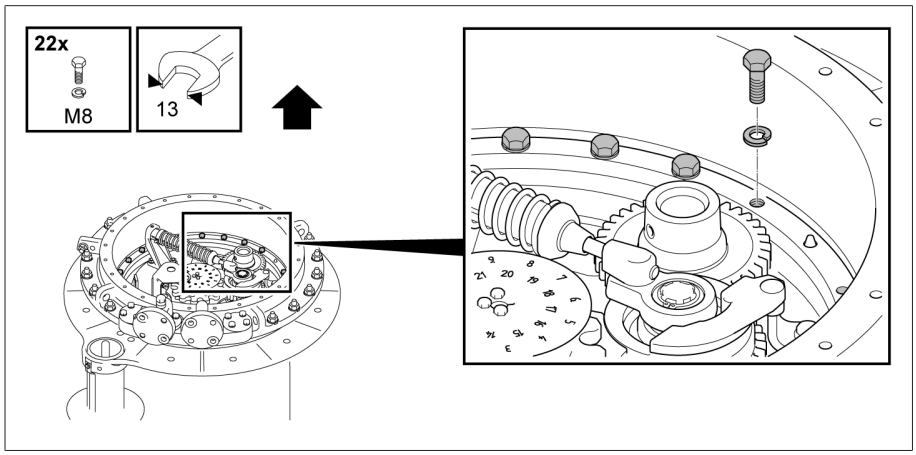


Figure 57: On-load tap-changer head

8. Lift top part of on-load tap-changer head off supporting flange.

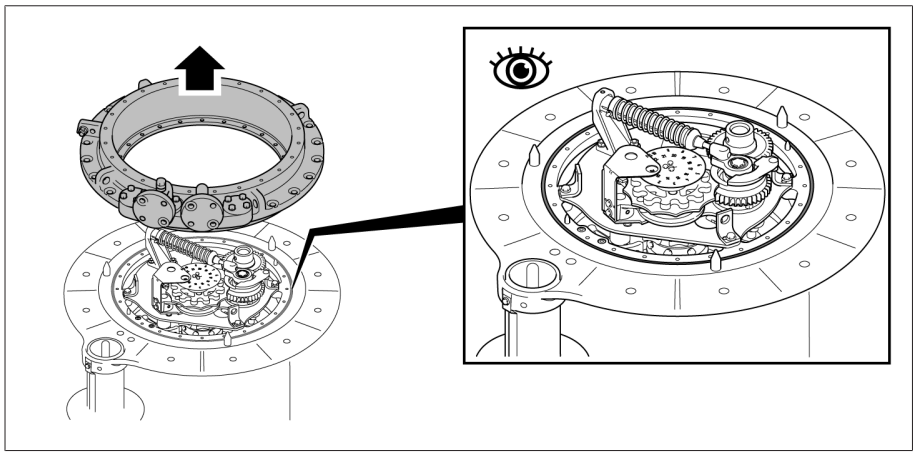

Figure 58: Top part of on-load tap-changer head

## 5.3.7 Attaching the bell-type tank and connecting the on-load tap-changer to the top part of the on-load tap-changer head

### 5.3.7.1 Attaching bell-type tank

1. Clean sealing surface of supporting flange, place o-ring on supporting flange.

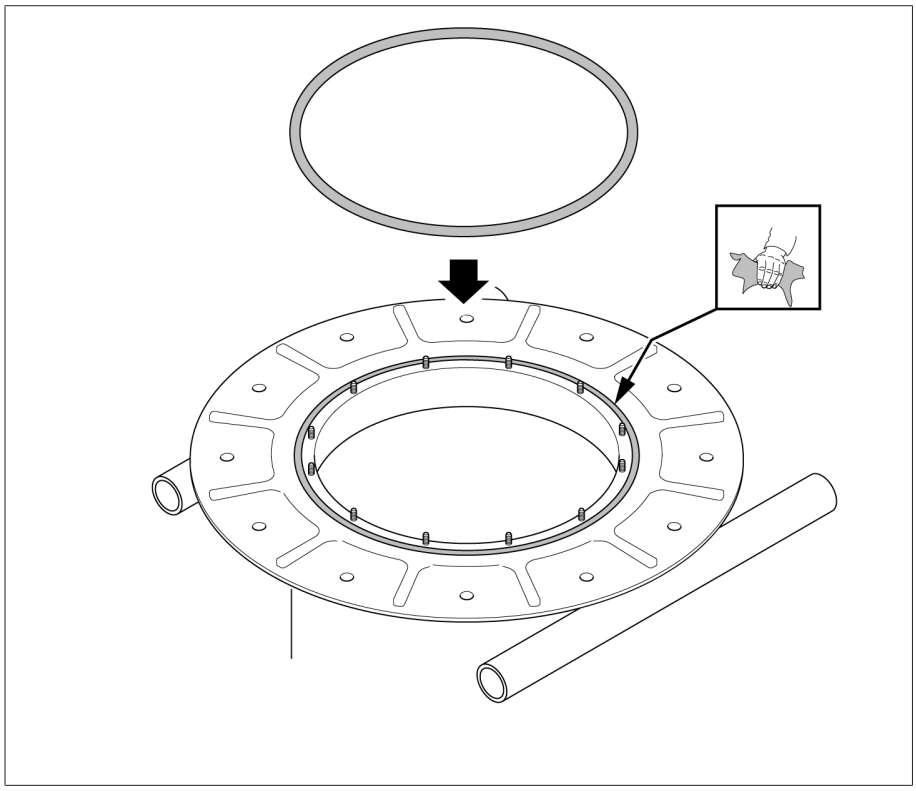

Figure 59: Supporting flange with o-ring

2. Lift the bell-type tank over the active part of the transformer.

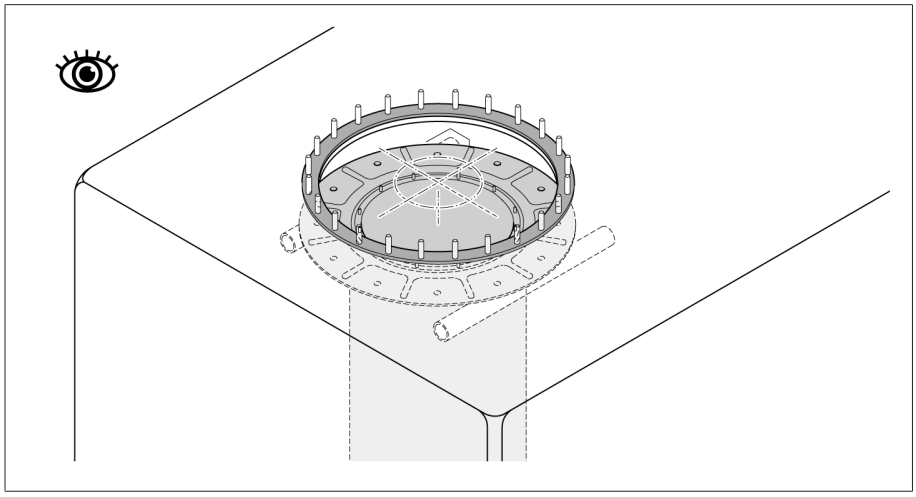

Figure 60: Bell-type tank

### 5.3.7.2 Positioning top part of on-load tap-changer head on bell-type tank

1. Clean sealing surfaces on mounting flange and on-load tap-changer head, place oil-resistant gasket on mounting flange.

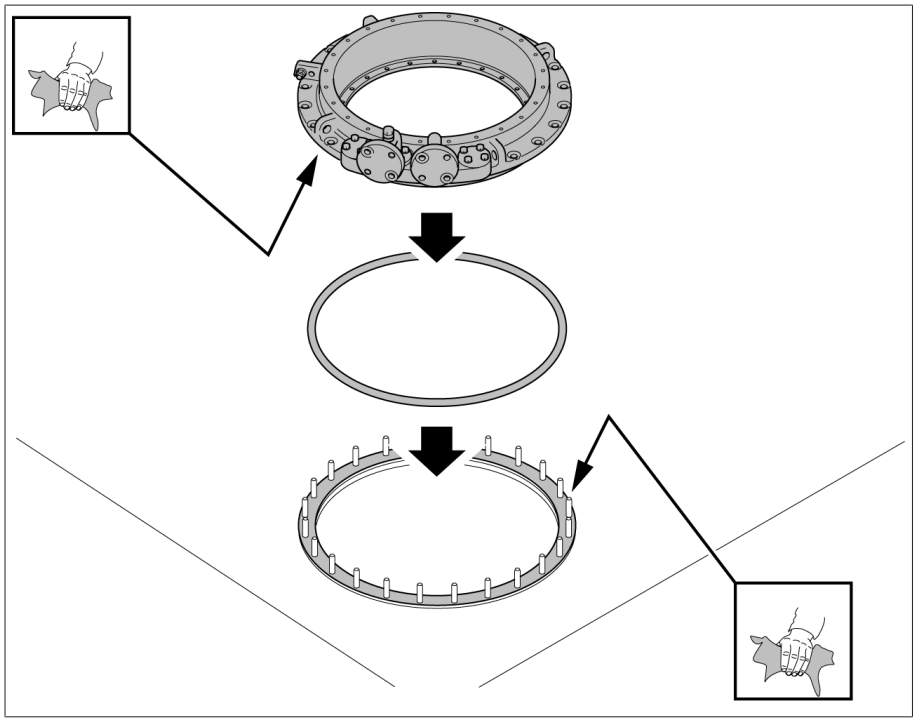

Figure 61: Mounting flange and on-load tap-changer head

2. Position top part of on-load tap-changer head on mounting flange.

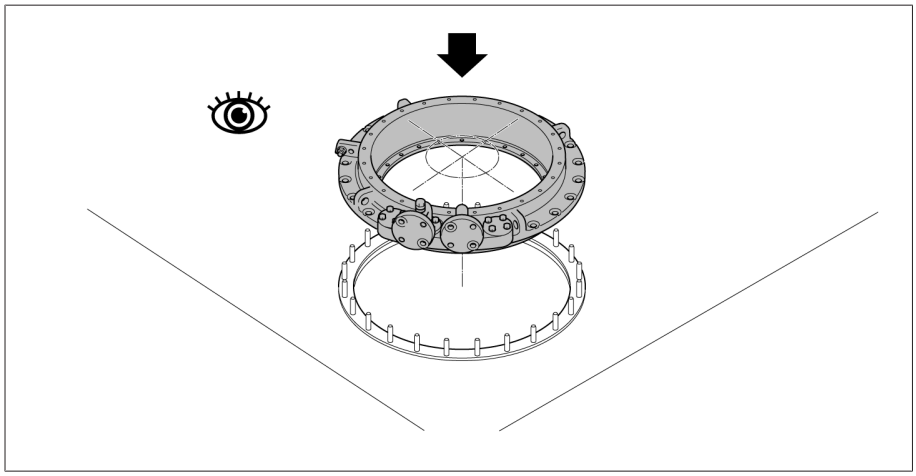

Figure 62: On-load tap-changer head

> For design without oil suction pipe, the on-load tap-changer head can be turned towards the supporting flange in 15° steps. For design with oil suction pipe, turning at 15° increments is not possible.
> When positioning the on-load tap-changer head, do however note that the tap-change supervisory control restricts the swivel range of the upper gear unit.

### 5.3.7.3 Connecting on-load tap-changer to top part of on-load tap-changer head

NOTICE

**Damage to the on-load tap-changer!**

A missing or damaged o-ring as well as unclean sealing surfaces lead to insulating fluid escaping and therefore to damage to the on-load tap-changer.

- Ensure that the o-ring is positioned untwisted in the on-load tap-changer head cover.
- Ensure that the o-ring does not become damaged when mounting the cover.
- Ensure that the sealing surfaces on the on-load tap-changer head cover and on-load tap-changer head are clean.

1. *NOTICE!* Incorrectly lifting the on-load tap-changer will damage it. Secure 4 ropes of equal length (at least 1 m in length) to the attachment points provided and slowly lift on-load tap-changer from below towards on-load tap-changer head. Under no circumstances should the on-load tap-changer be lifted up with the fixing bolts. Ensure that all supporting flange stud bolts go easily through the mounting holes of the on-load tap-changer head.

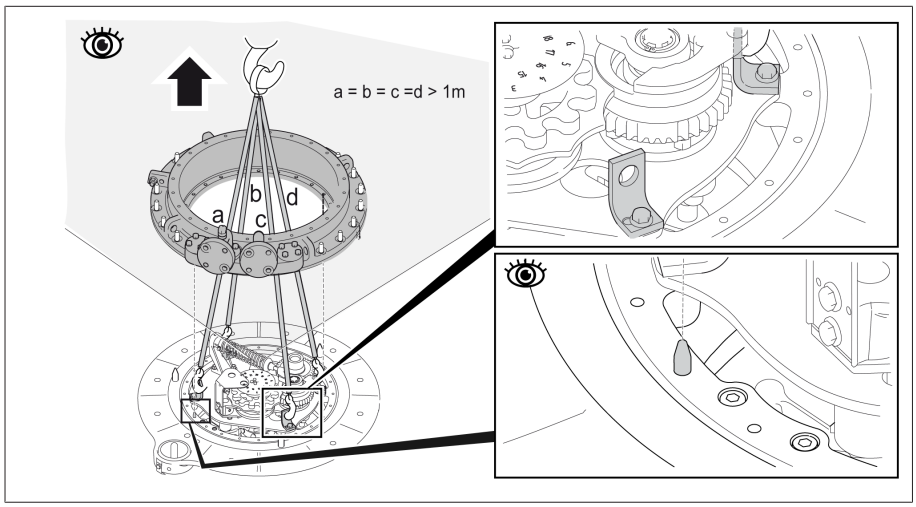


Figure 63: On-load tap-changer

2. Screw the top part to the bottom part of the on-load tap-changer head.

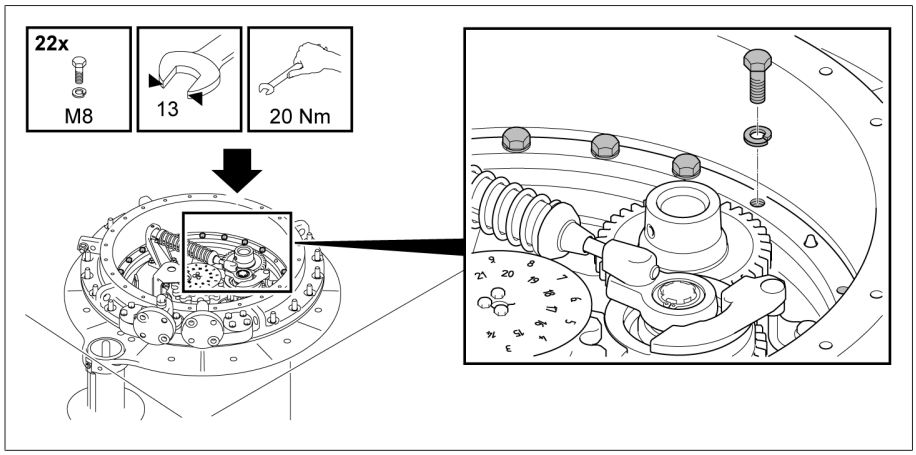


Figure 64: On-load tap-changer head

3. For design with oil suction pipe, connect oil suction pipe screw connection. Check for leaks.

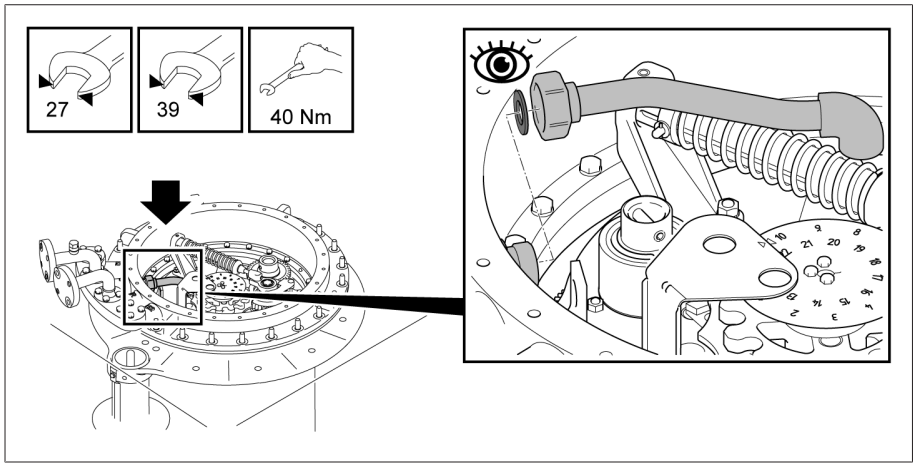


Figure 65: Oil suction pipe

4. Screw the on-load tap-changer head to the mounting flange. The tightening torque depends on the screw connection elements used.

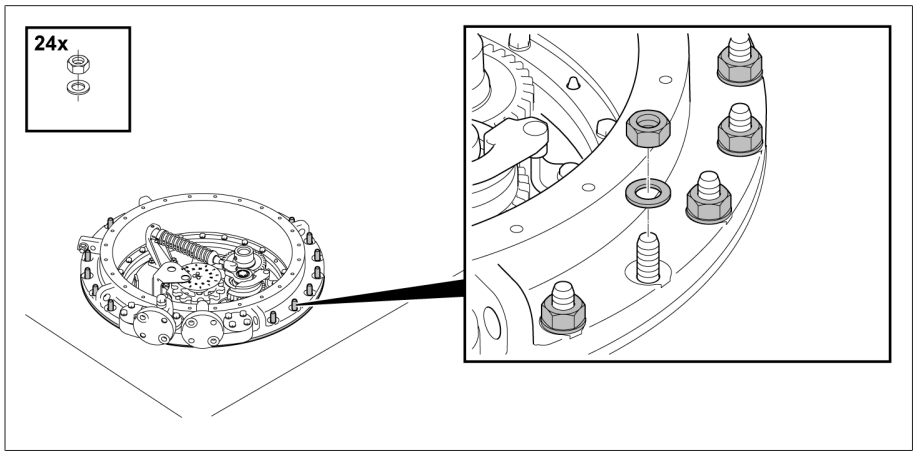


Figure 66: On-load tap-changer head

5. Place on-load tap-changer head cover on on-load tap-changer head and secure.

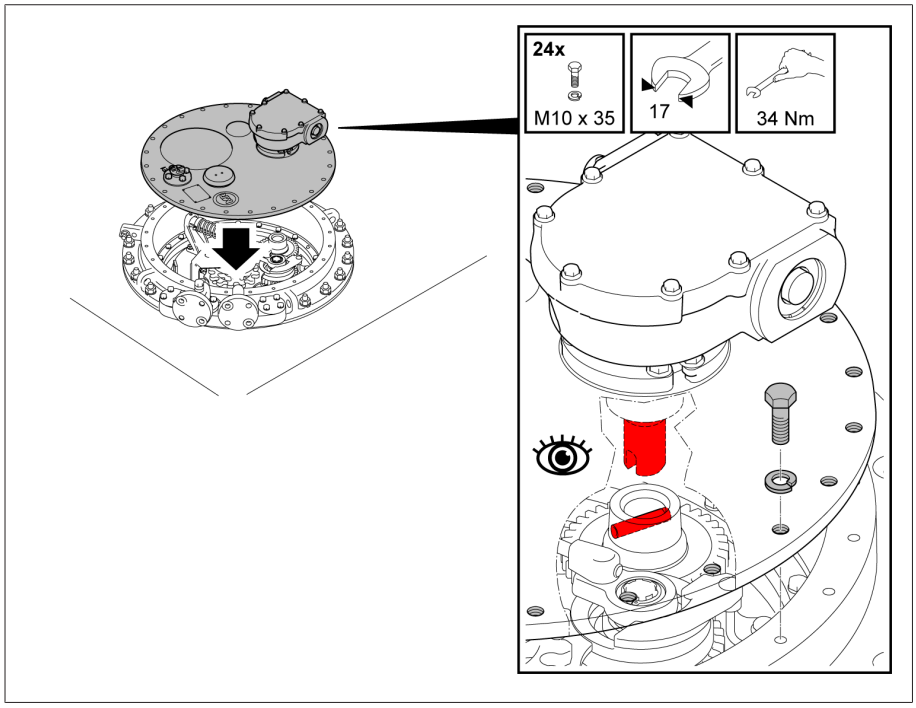


Figure 67: On-load tap-changer head cover

## 5.3.8 Drying on-load tap-changer in transformer tank

Dry on-load tap-changer in accordance with the following instructions to ensure the dielectric values assured by MR on the on-load tap-changer.

If you want to dry the on-load tap-changer in the transformer tank, fully assemble the transformer first and then undertake drying.

If drying in the transformer tank, the following methods are possible:
- Vacuum-drying
- Vapor-phase drying

As an alternative to drying the on-load tap-changer in the transformer tank, it can also be dried in an autoclave.

### 5.3.8.1 Vacuum-drying in the transformer tank

> The on-load tap-changer head cover remains closed during the entire drying process.

1. Establish a connecting lead between either connections E2 and Q or connections E2 and R on the on-load tap-changer head.
2. Seal off unused pipe connections and pipe bends with a suitable blank cover.

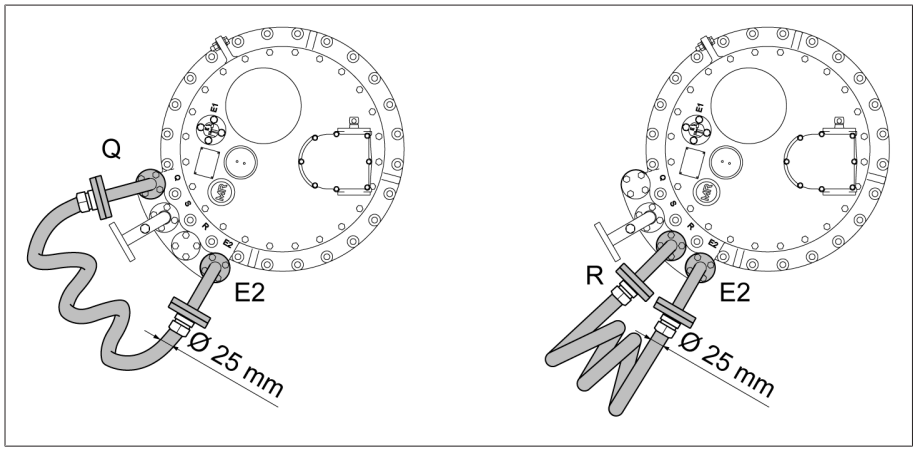


Figure 68: Connecting lead

### Vacuum-drying in the transformer tank

1. Heat up the on-load tap-changer in air at atmospheric pressure with a temperature increase of approximately 10 °C/h to a final temperature of maximum 110 °C.
2. Pre-dry the on-load tap-changer in circulating air at a maximum temperature of 110 °C for a period of at least 20 hours.
3. Vacuum-dry on-load tap-changer at between 105 °C and maximum 125 °C for at least 50 hours.
4. Residual pressure of no more than $10^{-3}$ bar.

## 5.3.8.2 Vapor-phase drying in the transformer tank

If you have opened the kerosene drain plug already (e.g. after the transformer ratio test), you can begin the drying right away.

Otherwise, you first have to open the kerosene drain plug before you can begin the drying.

1. Remove on-load tap-changer insert. Please request the documents for removal from Maschinenfabrik Reinhausen GmbH.
2. Unscrew kerosene drain plug in base of oil compartment clockwise. The kerosene drain plug cannot be unscrewed all the way.

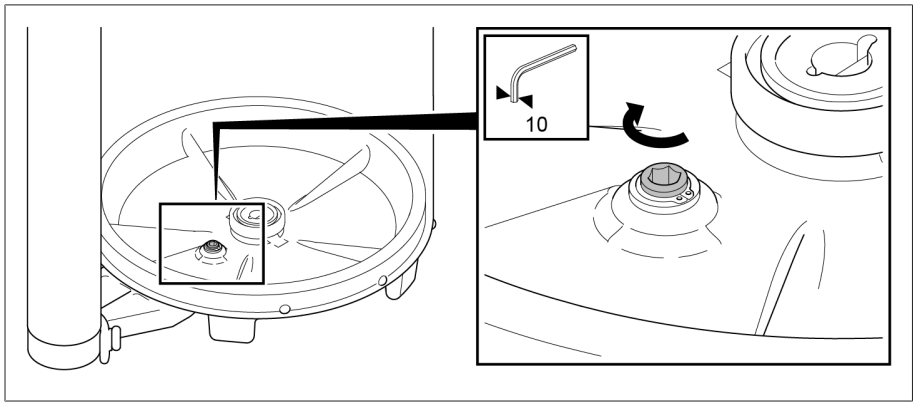


Figure 69: Kerosene drain plug

3. Insert on-load tap-changer insert. Please request the documents for installation from Maschinenfabrik Reinhausen GmbH.

4. Connect pipe connections R and Q of on-load tap-changer head to the kerosene vapor lead using one shared lead.

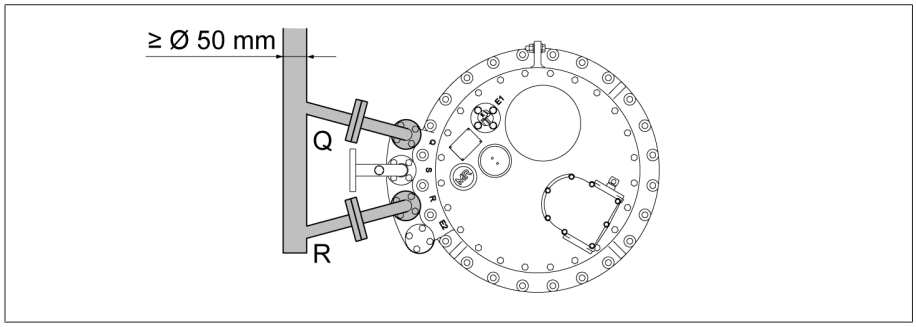


Figure 70: Kerosene vapor lead

5. Seal off unused pipe connections and pipe bends with a suitable blank cover.

### Vapor-phase drying in the transformer tank

1. Supply kerosene vapor at a temperature of around 90°C. Keep this temperature constant for 3 to 4 hours.
2. Increase the kerosene vapor temperature by approx. 10°C/hour to the desired final temperature of max. 125°C at the on-load tap-changer.
3. Vacuum-dry on-load tap-changer at between 105°C and maximum 125°C for at least 50 hours.
4. Residual pressure of no more than $10^{-3}$ bar.

After drying, proceed as follows to close the kerosene drain plug again:

1. Remove on-load tap-changer insert.
2. *NOTICE!* An open kerosene drain plug leads to oil escaping from the oil compartment and therefore to damage to the on-load tap-changer. Close kerosene drain plug counter-clockwise (tightening torque 39 Nm).
3. Insert on-load tap-changer insert.

## 5.3.9 Filling the oil compartment of the on-load tap-changer with insulating fluid

*NOTICE*

**Damage to the on-load tap-changer!**

Unsuitable insulating fluids cause damage to the on-load tap-changer.

› Only use insulating fluids [►Section 8.1.2, Page 154] approved by the manufacturer.

After drying, completely fill the oil compartment (diverter switch insert fitted) with insulating fluid again as soon as possible so that an impermissible amount of humidity is not absorbed from the surroundings.

1. Establish a connecting lead between pipe connection E2 and one of the pipe connections R, S or Q to ensure equal pressure in the oil compartment and transformer during evacuation.

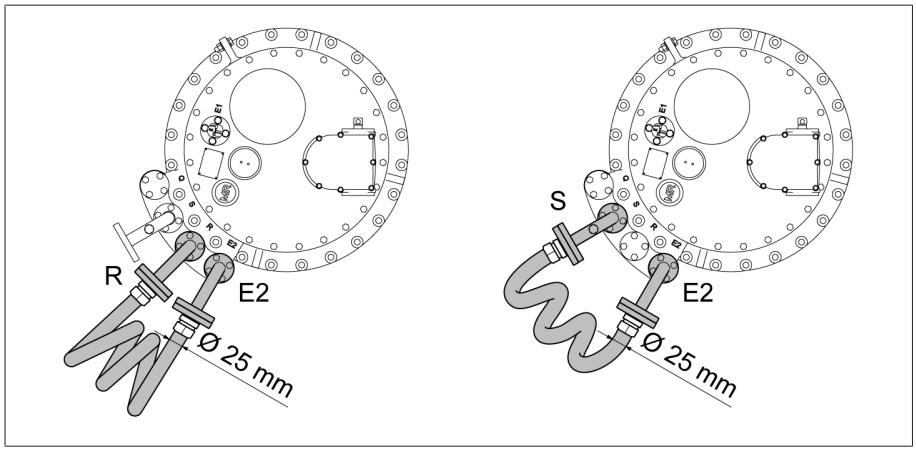


Figure 71: Connecting lead between E2 and Q

2. Fill on-load tap-changer with new insulating fluid using one of the two free pipe connections of the on-load tap-changer head.

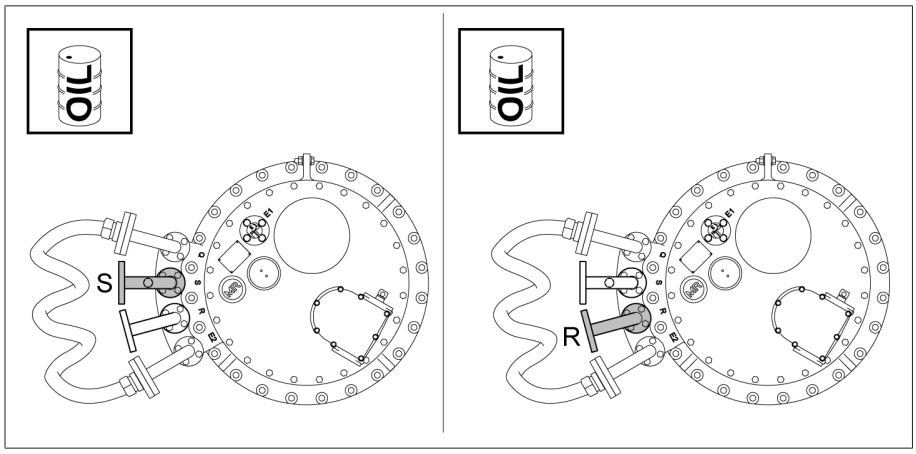


Figure 72: Pipe connections S and R

### 5.3.10 Performing transformer ratio test after drying

NOTICE

**Damage to the on-load tap-changer!**

Damage to the on-load tap-changer due to transformer ratio test being incorrectly performed.

- Ensure that the selector / de-energized tap changer is fully immersed in the insulating fluid and that the oil compartment of the on-load tap-changer is completely filled with insulating fluid.
- Only switch the on-load tap-changer from one operating position to the next via the upper gear unit. You can use a short tube (diameter 25 mm) with screwed-in coupling bolt (diameter 12 mm) with a hand wheel or crank for this, for example. When using a drill, do not exceed a maximum speed of 250 rpm.
- Always check the operating position reached through the inspection window in the on-load tap-changer head cover. Never overshoot the end positions, which are indicated in the connection diagram supplied with the delivery.
- For multiple-column applications with a shared drive, link all on-load tap-changer heads to one another using the horizontal drive shaft part.

i

When actuating the change-over selector, a higher torque is required.

1. Switch the on-load tap-changer into the desired operating position. The diverter switch operation can be heard distinctly.
2. *NOTICE!* An incomplete tap-change operation may damage the on-load tap-changer. After operating the diverter switch, continue to crank the drive shaft of the upper gear unit for 2.5 revolutions in the same direction in order to correctly complete the tap-change operation.
3. Perform the transformer ratio test.
4. Repeat the transformer ratio test in all operating positions.
5. Switch the on-load tap-changer into adjustment position (see the accompanying connection diagram for the on-load tap-changer).

## 5.4 Fitting protective devices and drive components

### 5.4.1 Electrically connecting the temperature sensor

> Size the cable for the electrical connection of the temperature sensors such that you can turn the sensors if necessary when mounting the drive shaft.

› Electrically connect the temperature sensors in accordance with the connection diagram provided.

### 5.4.2 Connecting tap-change supervisory control

1. Ensure that the drive and the on-load tap-changer are in the adjustment position. You must be able to see a triangle in the tap-change supervisory control's inspection window.

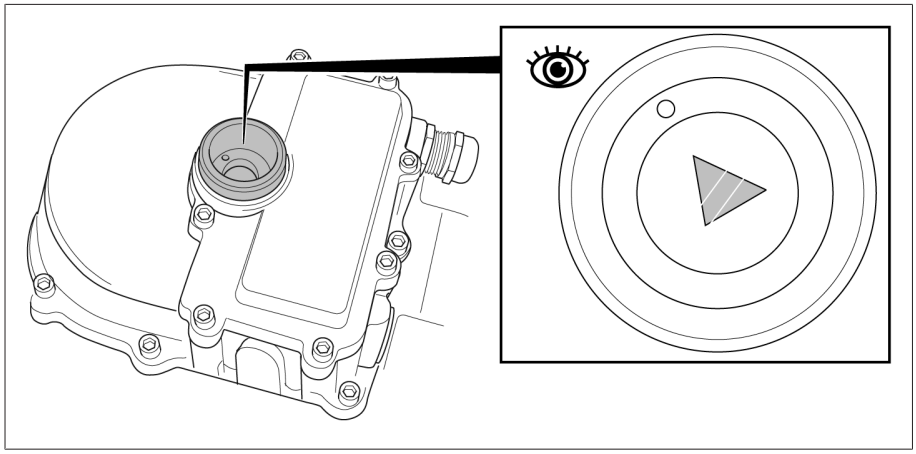

Figure 73: Tap-change supervisory control

2. Loosen the hexagonal socket screws on the terminal box cover of the tap-change supervisory control and remove the terminal box cover.

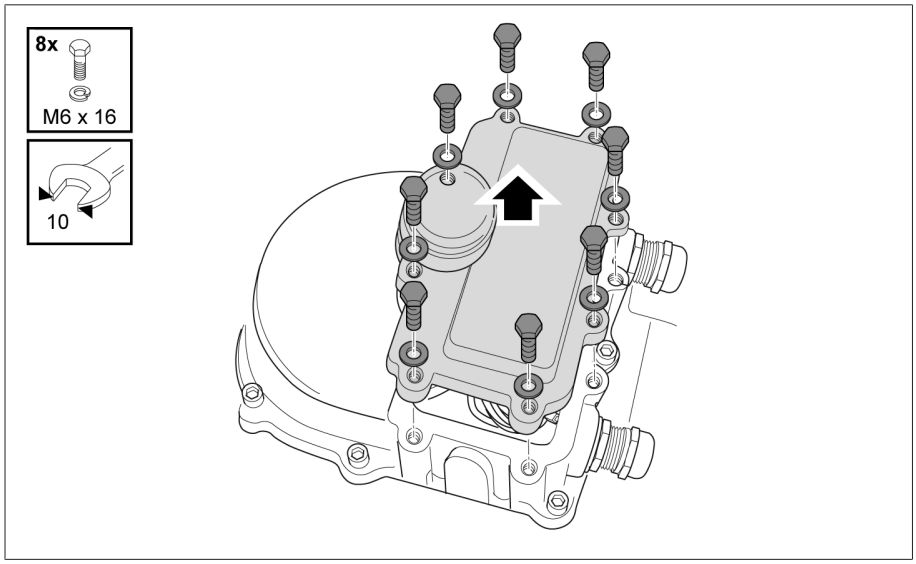


Figure 74: Tap-change supervisory control cover

3. Connect monitoring contacts to corresponding motor-drive unit terminals using connecting lead in accordance with connection diagram of relevant motor-drive unit.

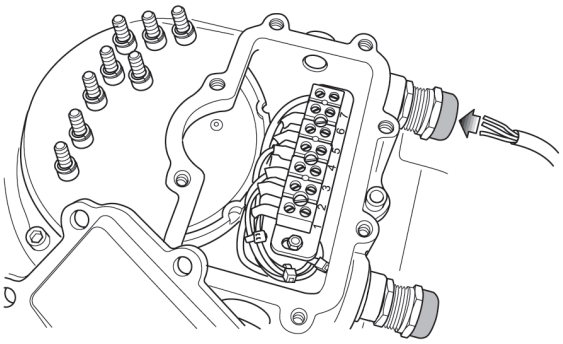

Figure 75: Tap-change supervisory control

4. Mount the terminal box cover. Ensure that the sealing points are clean.

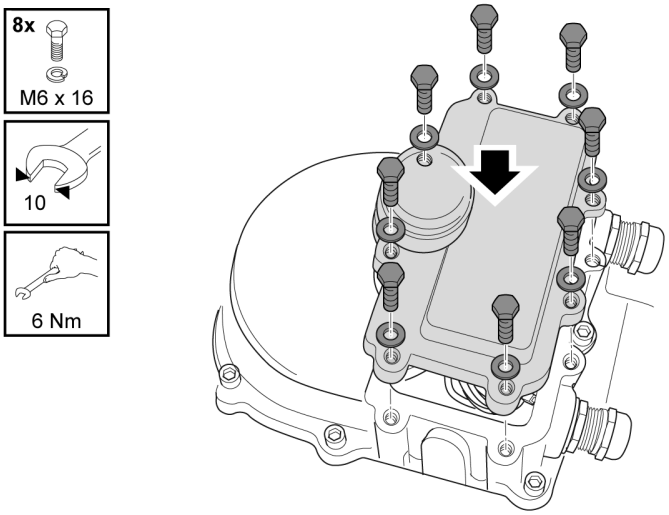


Figure 76: Tap-change supervisory control cover

### 5.4.3 Installing protective relay in piping and connecting

**⚠ WARNING**

**Danger of explosion!**

Explosive gases in the protective relay can deflagrate or explode and result in severe injury or death.

- Wait 15 minutes after switching off the transformer before beginning further work on the protective relay so that the gases can dissipate.
- Ensure that there are no ignition sources such as naked flames, hot surfaces or sparks (e.g. caused by the build-up of static charge) in the immediate surroundings and that none occur.
- De-energize all auxiliary circuits before beginning work.
- Do not operate any electrical devices during the work (e.g. risk of sparks from impact wrench).

i Always perform all transformer tests with the protective relay attached and connected.

### 5.4.3.1 Checking function of protective relay

Check the function of the protective relay before installing it in piping between on-load tap-changer head and oil conservator. The associated contact positions for checking electrical continuity are shown in the dimensional drawing provided.

1. Loosen the three screws on the terminal box cover and lift off the terminal box cover.

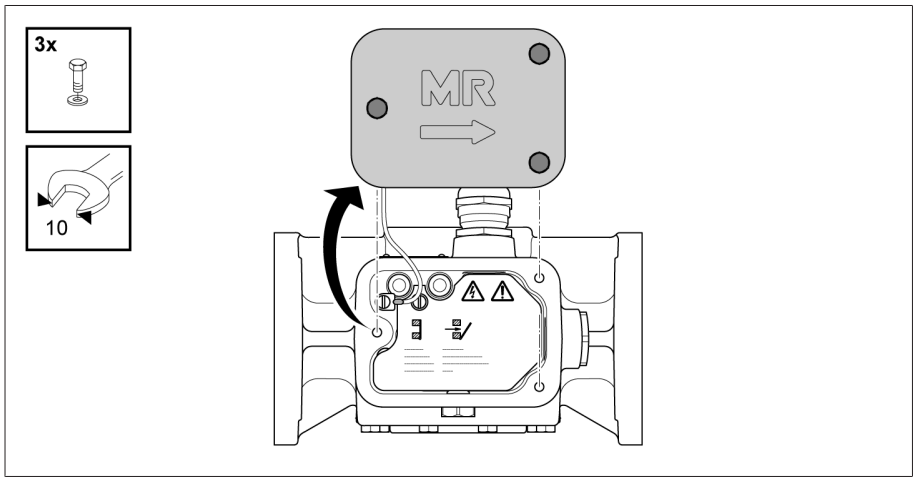


Figure 77: Terminal box cover

2. Remove the slotted head screw for potential tie-in and remove the terminal box cover with wire.

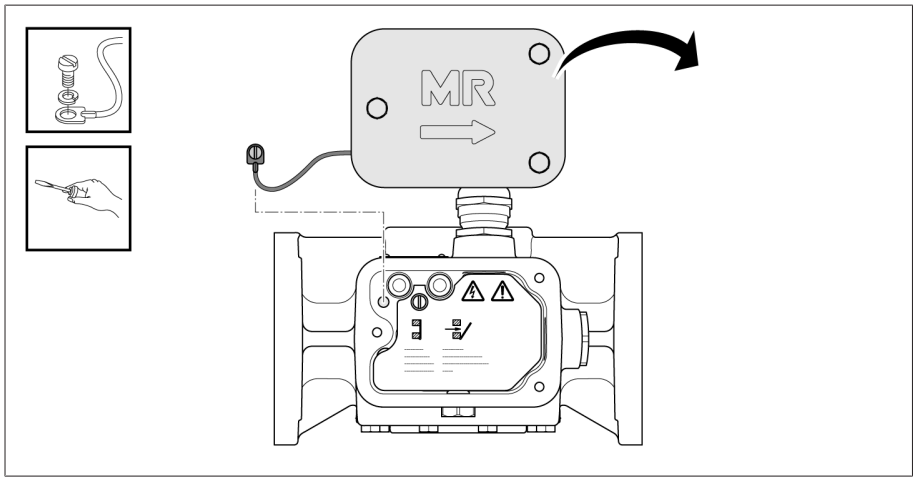


Figure 78: Terminal box cover

*NOTICE*

**Damage to protective relay!**

Damage to protective relay resulting from improper operation.

› Never press both test buttons at the same time.

3. Press OFF test button.
   » Flap valve is inclined. Line marker appears in the middle of the inspection window.

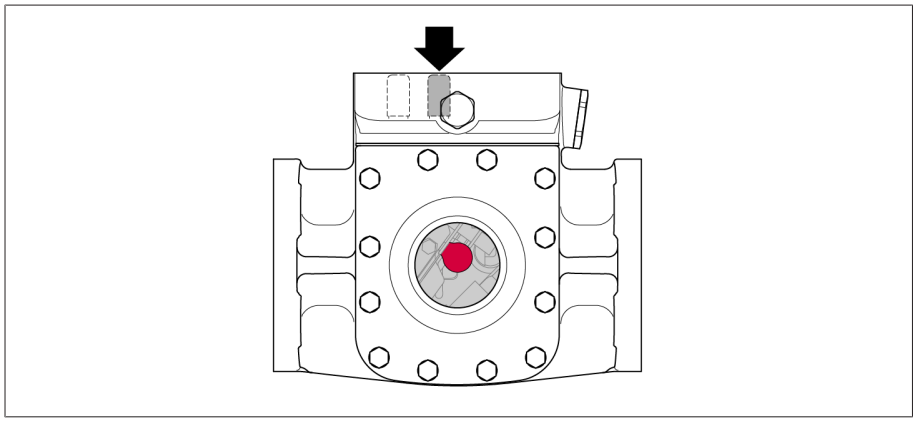

Figure 79: OFF position

4. Press OPERATION test button.
   » Flap valve is vertical.

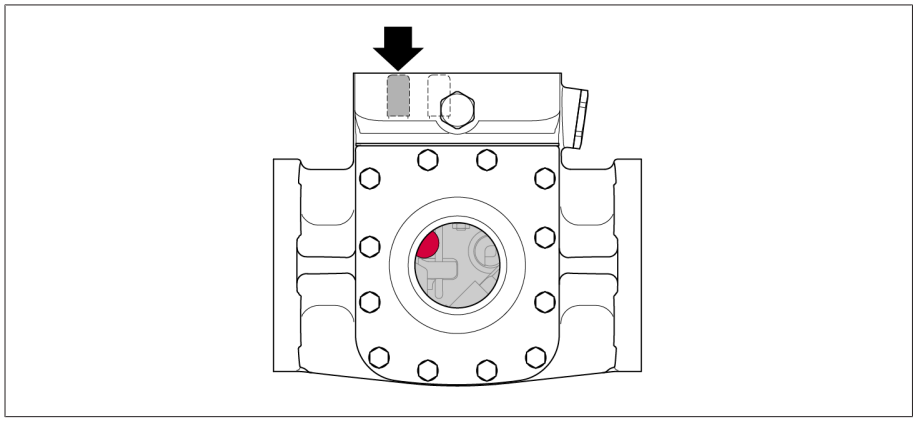

Figure 80: OPERATION position

5. Position the wire for the terminal box cover and affix using the slotted head screw.

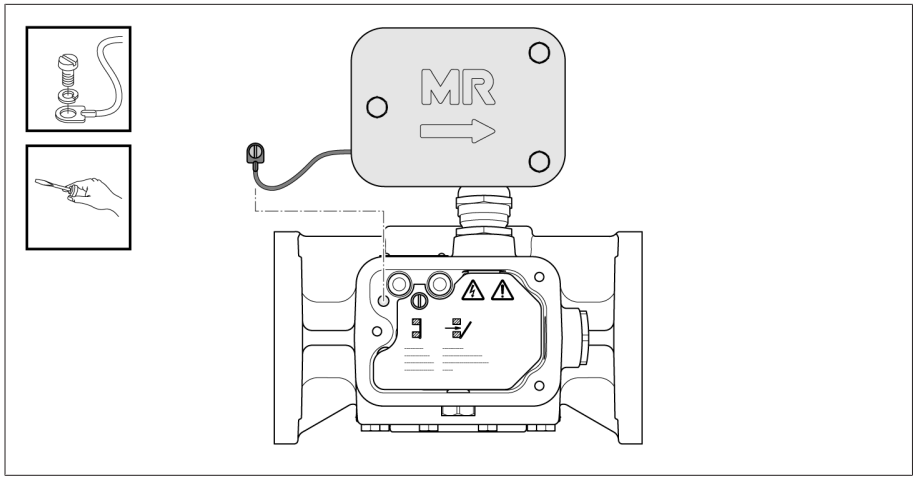


Figure 81: Terminal box cover

6. Attach the terminal box cover and secure with screws.

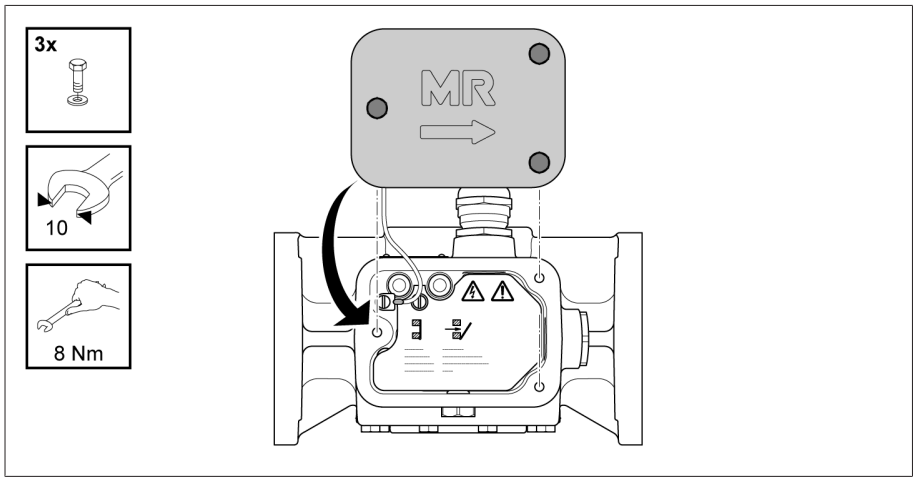


Figure 82: Terminal box cover

### 5.4.3.2 Installing protective relay in piping

Ensure the following for installation and proper function of the protective relay:

1. Ensure that there are no foreign bodies in the piping or in the oil conservator.
2. Install protective relay such that it can be easily accessed for subsequent maintenance work.
3. Install protective relay with good support and free from vibrations.
4. The test buttons must be at the top.
5. The interior diameter of the piping must be at least 25 mm.
6. The magnetic field strength (bushings, busbars etc.) must be < 20 kA/m. Higher field strengths have a negative effect on the function of the protective relay.
7. The piping from the protective relay to the oil conservator must be routed with an inclination of at least 2% (1.2°) to ensure the switching gases can escape freely.

8. The protective relay is intended for a horizontal operating position in close proximity to the on-load tap-changer head. A positive inclination of up to 5° from horizontal is permitted in the direction to the conservator. An inclination of up to 5° from vertical to either side is permitted.

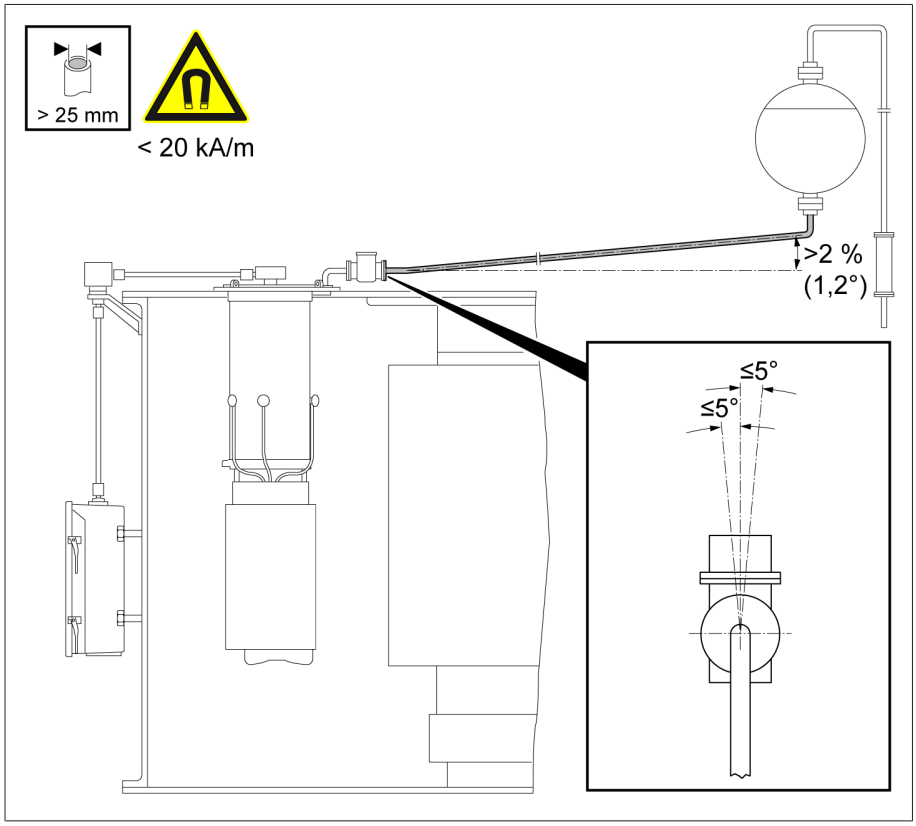


Figure 83: Protective relay installation

9. The reference arrow on the terminal box cover must point toward the on-load tap-changer's oil conservator.

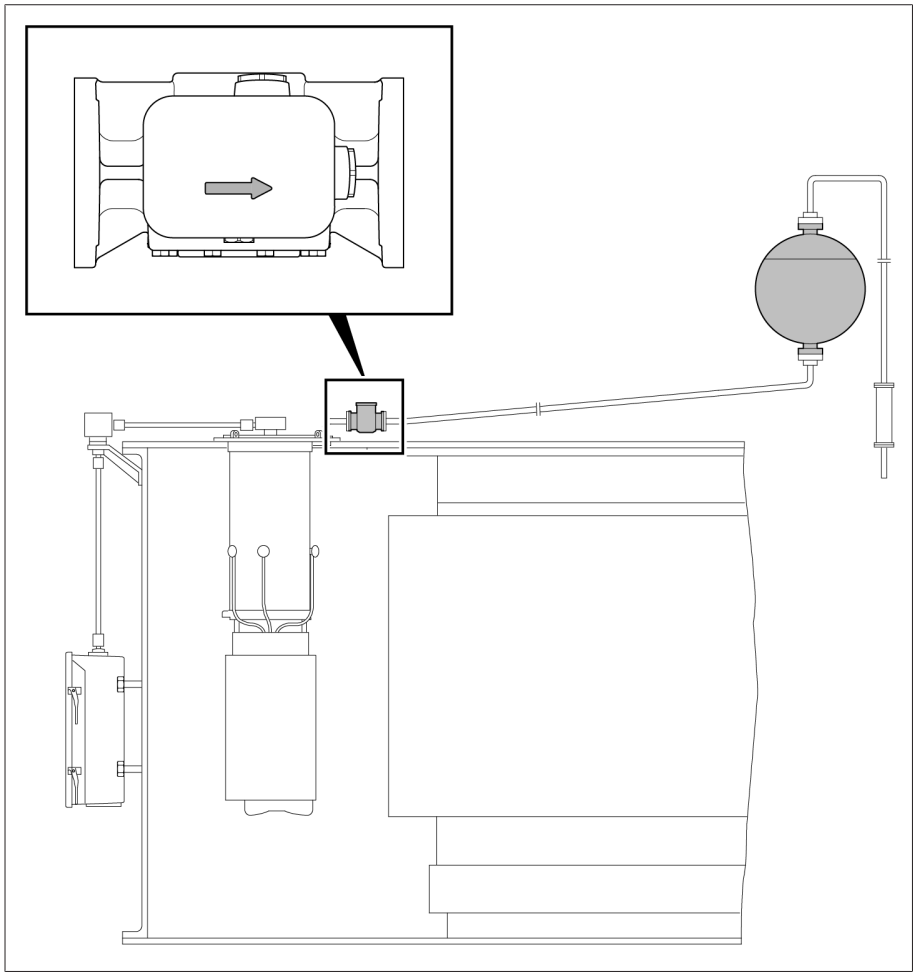

Figure 84: Reference arrow pointing towards the on-load tap-changer's oil conservator

10 Install a stop-cock with a nominal width of at least 25 mm between the protective relay and oil conservator.

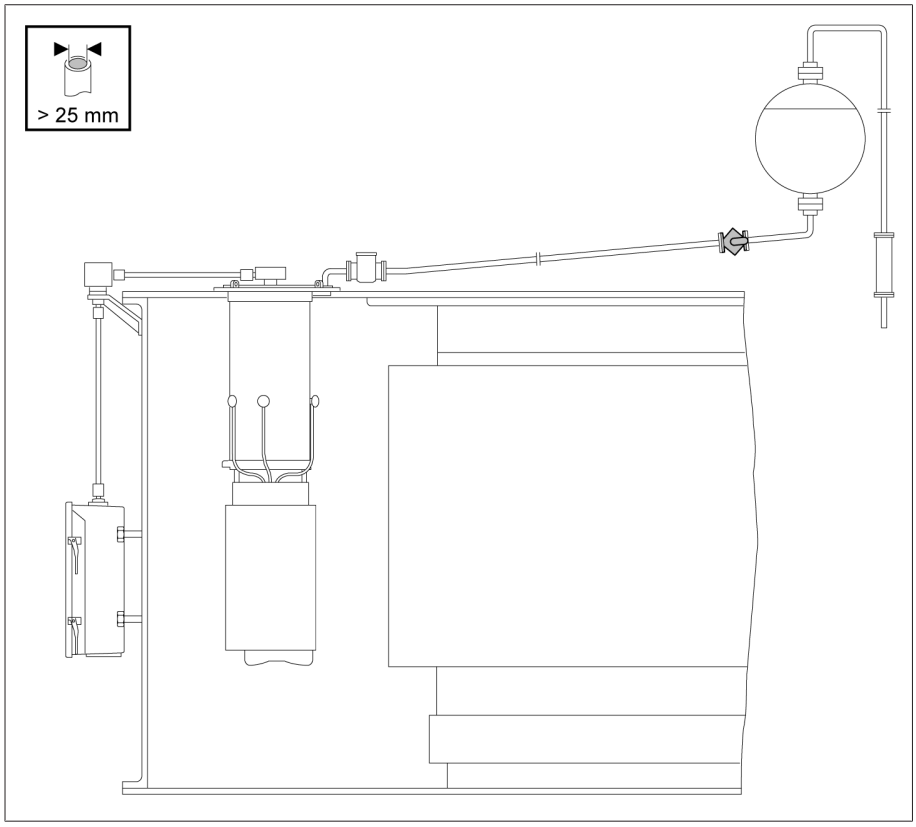


Figure 85: Stop-cock

### 5.4.3.3 Making the electrical connections for the protective relay

The protective relay's dry-reed magnetic switching tubes are supplied in the standard version as either NC or NO contacts. Other contact combinations can be supplied as special versions and are shown in the dimensional drawing provided.

**⚠ WARNING**

**Risk of death or severe injury!**

Risk of death or severe injury due to improper electrical connection of the protective relay.

- Loop the protective relay into the tripping circuit of the circuit breakers of the transformer to be protected so that the transformer is immediately de-energized by the circuit breakers when the protective relay is tripped.
- Systems which only generate an alarm message are not permitted.

1. Insert cable gland (RS 2001, 2001/V, 2001/H, 2001/E, 2001/5, 2001/R) or adapter (RS 2003 and RS 2004) in the tapped hole with the most favorable position.

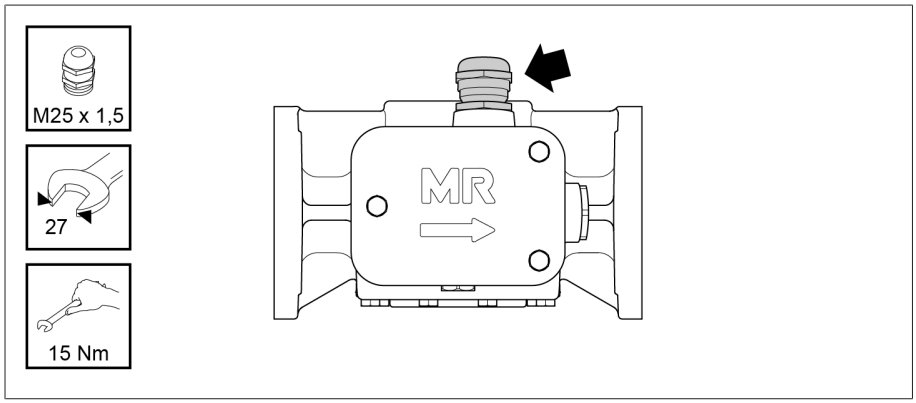


Figure 86: Tapped hole

2. Seal open tapped hole with dummy plug.

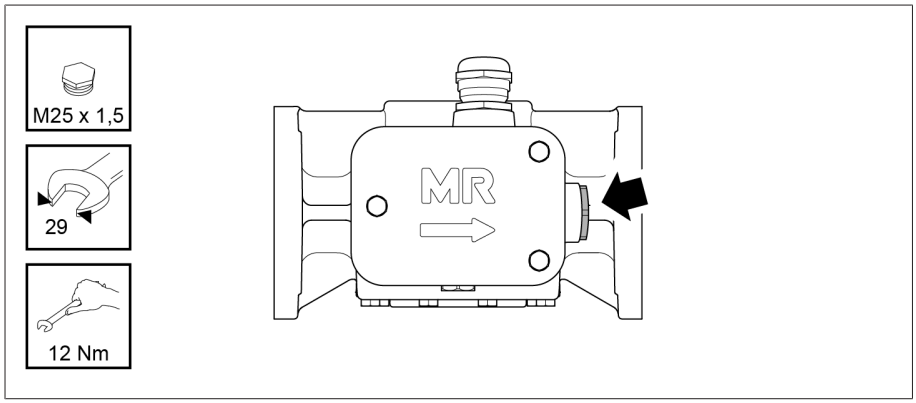


Figure 87: Sealed with dummy plug

3. Loosen the three screws on the terminal box cover and lift off the terminal box cover.

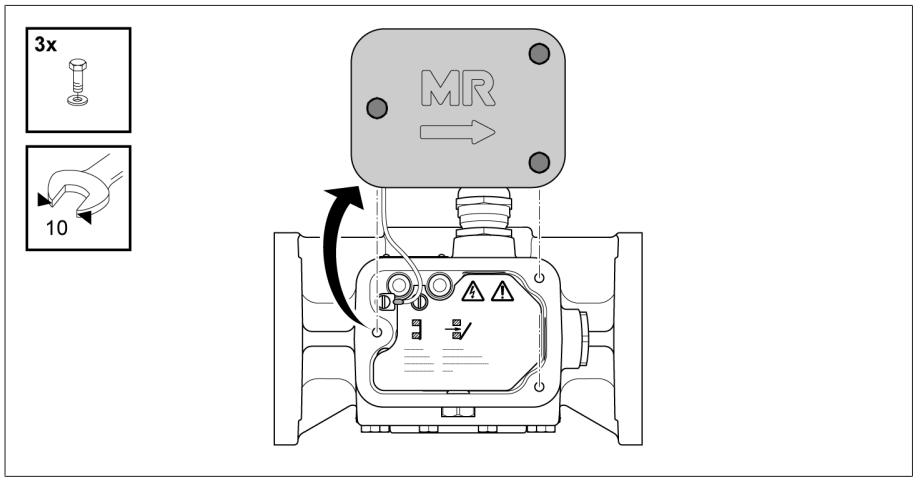


Figure 88: Terminal box cover

4. Take off the slotted head screw for potential tie-in and remove the terminal box cover with wire.

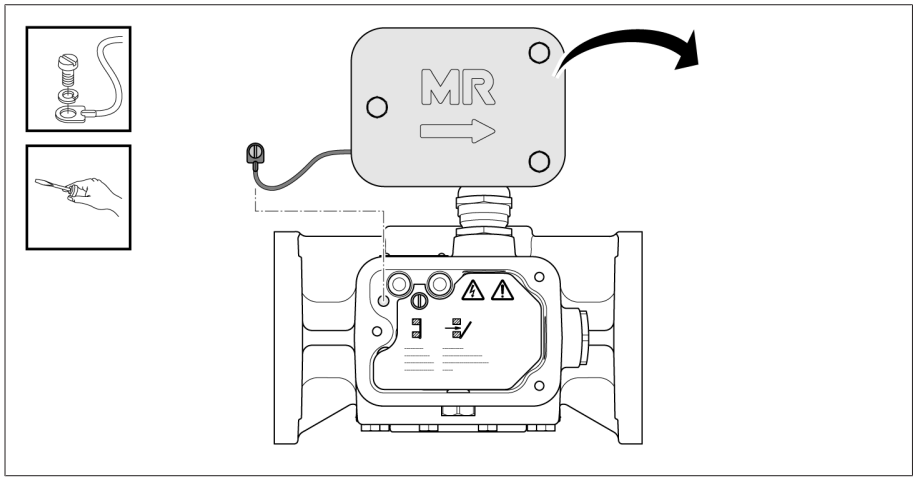


Figure 89: Terminal box cover

5. Remove screw for the protective cover and take off the protective cover.

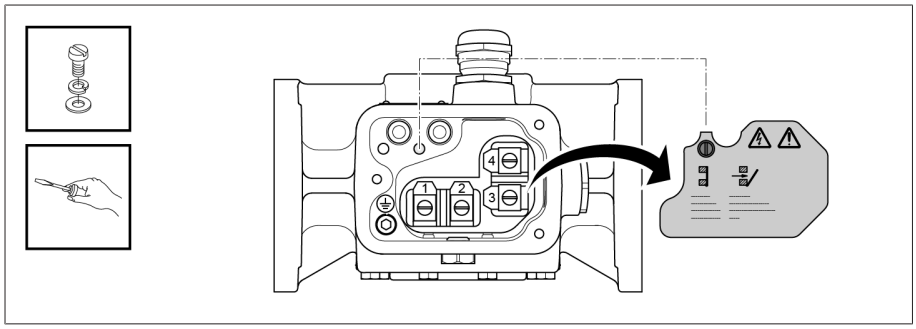


Figure 90: Protective cover

6. Guide cable through cable gland and into protective relay. Ensure that the cable gland is well connected and sealed.

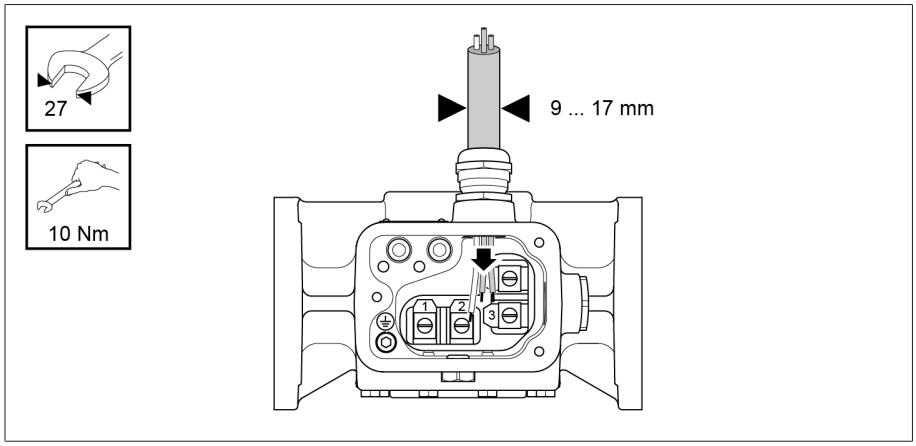


Figure 91: Cable bushing

7. Connect the electric cables to the connection terminals in accordance with the connection diagram on the dimensional drawing.

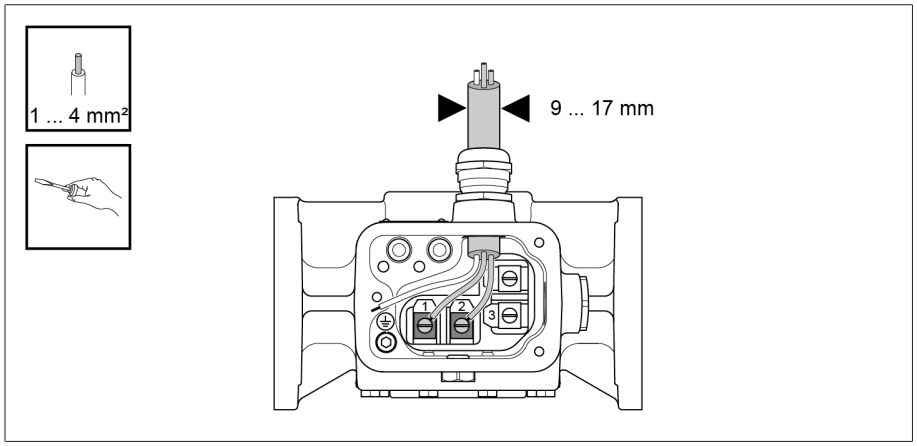


Figure 92: Electrical cables

8. Connect protective conductor to cylinder head screw.

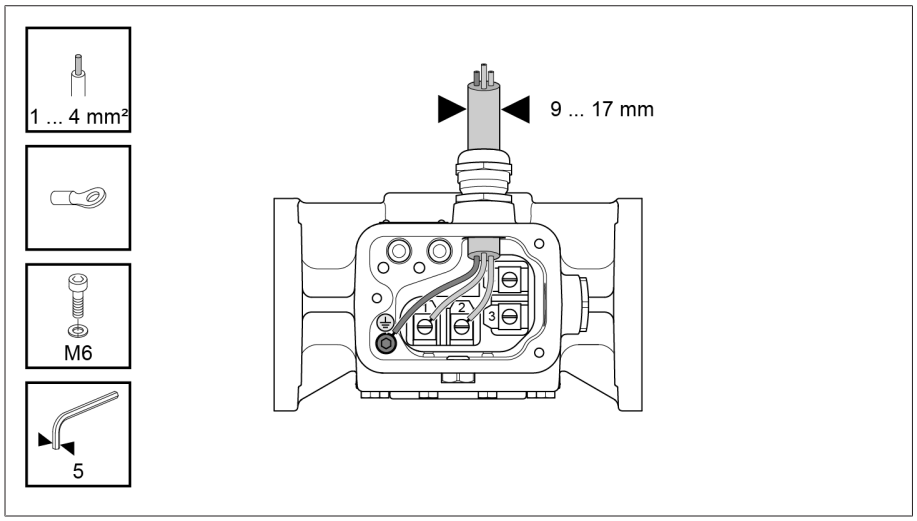


Figure 93: Protective conductor

9. Insert the protective cover and secure using the screw.

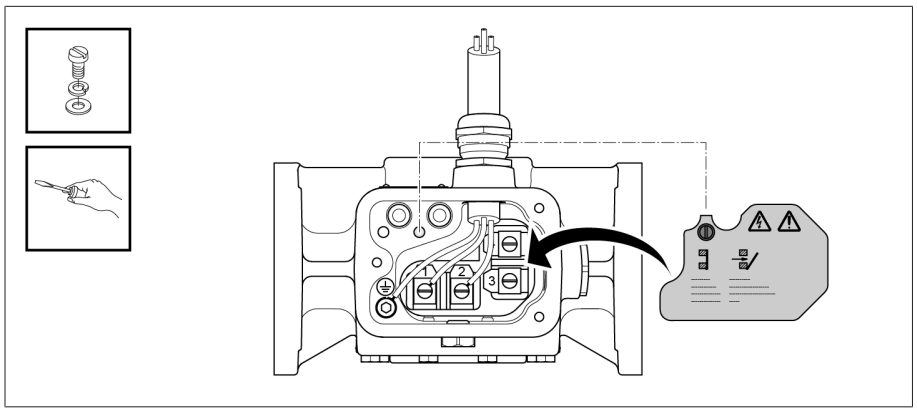


Figure 94: Protective cover

10. Position the wire for the terminal box cover and affix using the slotted head screw.

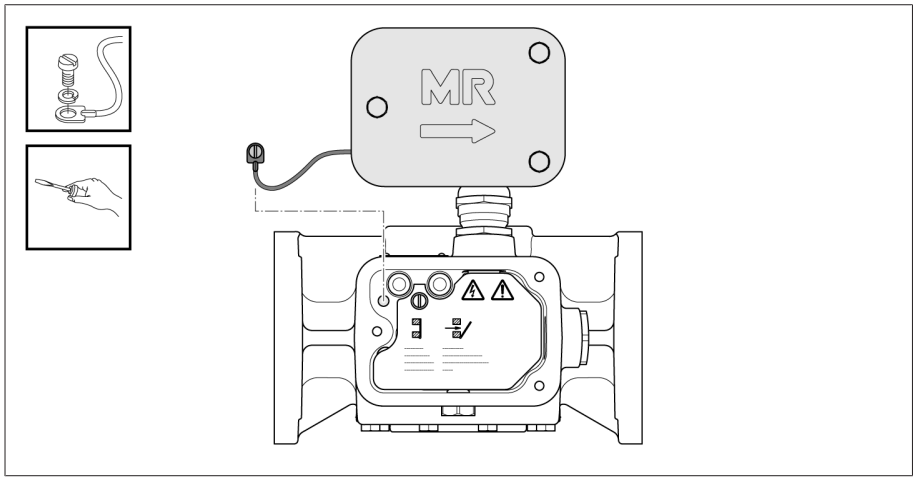


Figure 95: Terminal box cover

11. Attach the terminal box cover and secure with screws.

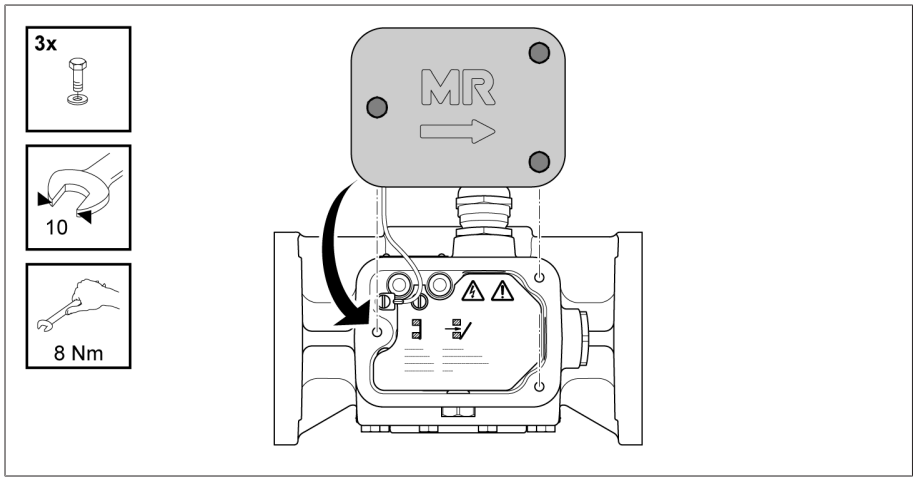


Figure 96: Terminal box cover

## 5.4.4 Installing and connecting the pressure monitoring device

### 5.4.4.1 Checking the function of the pressure monitoring device

Check the function of the pressure monitoring device before you install it on the pipe bend or the on-load tap-changer head.

1. Remove the cover cap.

2. Activate the snap-action switch.
   » Sensor is in the OFF position above the snap-action switch.

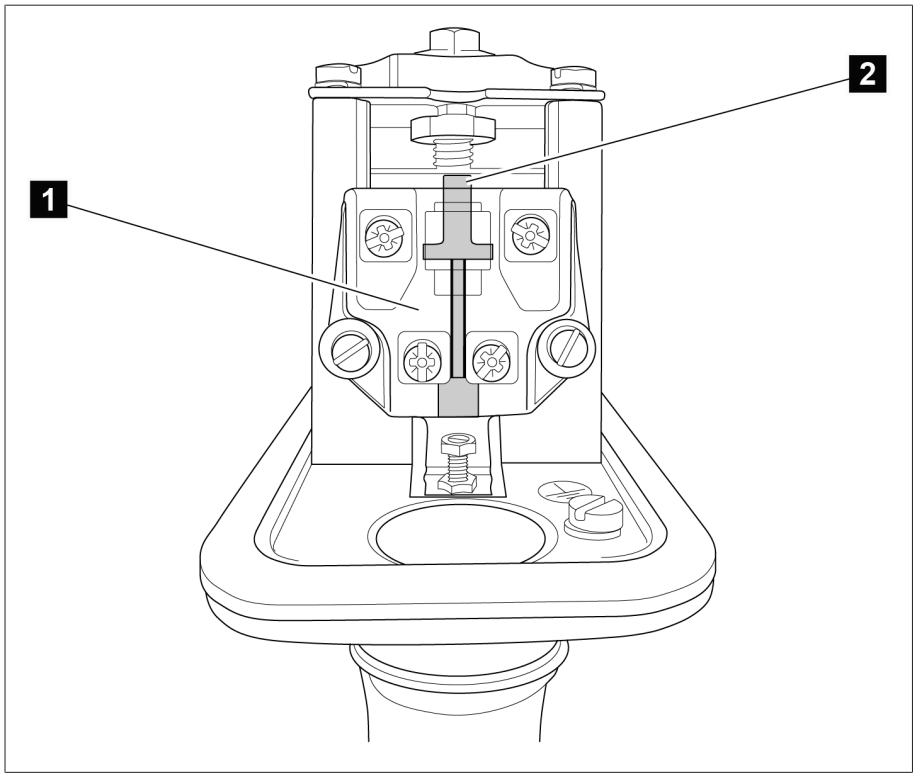


Figure 97: OFF position

| | |
|---|---|
| 1 | Snap-action switch |
| 2 | Sensor in the OFF position |

3. Activate the snap-action switch again.
   » Sensor is in the OPERATION position below the snap-action switch.

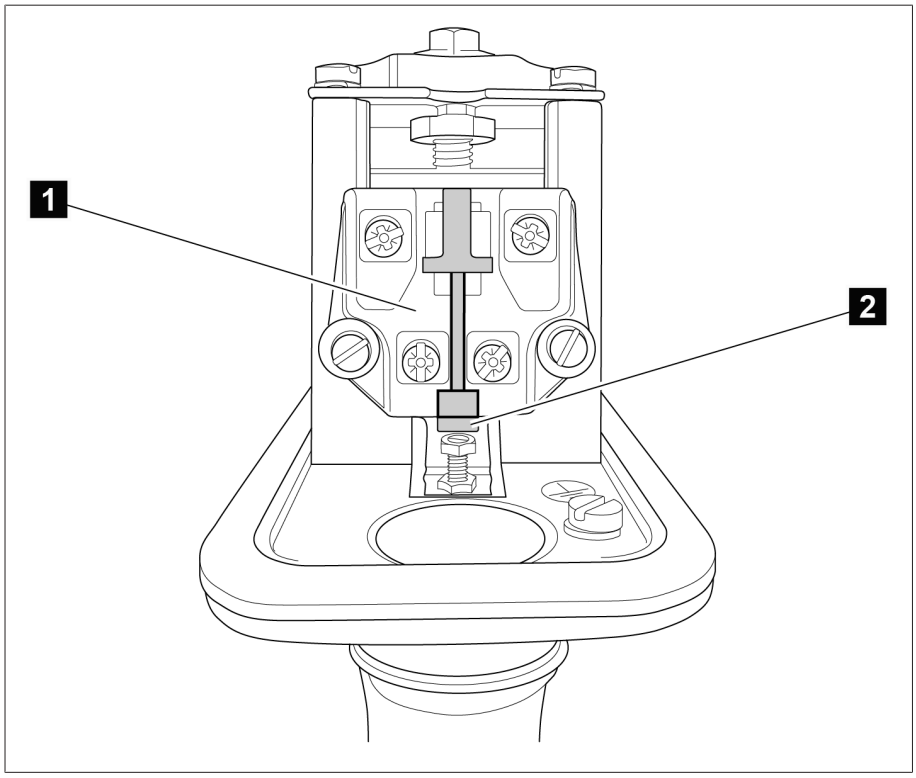


Figure 98: OPERATION position

| | |
|---|---|
| 1 | Snap-action switch |
| 2 | Sensor in the OPERATION position |

4. Secure the cover cap.

Always check the position of the sensor!

### 5.4.4.2 Installing the pressure monitoring device

The pressure monitoring device can be installed in 2 variants.
- Fastening on the on-load tap-changer head (vertical installation)
- Fastening onto the pipe bend (horizontal installation)

It is installed via the holes on the mounting ring. A mounting seal has to be installed under the pressure monitoring device during installation.

During fastening, ensure that the ventilation is on top.

Ensure that there is sufficient space above the pressure monitoring device to remove the cover cap.

### 5.4.4.3 Making the electrical connections for the pressure monitoring device

⚠ DANGER

**Risk of fatal injury due to electrical voltage!**

Danger of death due to electrical voltage when assembling and connecting the device.

› De-energize the device and system peripherals and lock them to prevent them from being switched back on.

**⚠ WARNING**

**Danger of death or severe injury!**

Risk of severe injury or death due to improper electrical connection of the pressure monitoring device.

- Loop the pressure monitoring device into the tripping circuit of the circuit breakers of the transformer to be protected so that the transformer is immediately de-energized by the circuit breakers when the pressure monitoring device is tripped.
- Circuits which only generate an alarm message are not permitted.

1. Remove the cover cap.
2. Insert Use the tapped hole for routing leads for this.
3. Connect the leads to the terminals of the snap-action switch.
   The snap-action switch is designed as a normally open and normally closed switch; it flips after being triggered and can be reset.
4. Connect all of the electrical leads and the protective conductor.
   Either 1 or 2 leads can be connected per terminal for the lead connection (Ø 0.75...2.5 $mm^2$).
5. Secure the cover cap.
6. Ensure the fixing screw is positioned correctly, see also dimensional drawing supplied.

## 5.4.5 Fitting motor-drive unit

- Fit motor-drive unit to transformer as described in relevant MR operating instructions for motor-drive unit.

## 5.4.6 Fitting drive shaft

Observe the following during mounting:

### Resistance to corrosion of components

The square tubes, coupling brackets, coupling bolts, screws, and locking washers are corrosion-resistant. We therefore recommend not applying the same external coating to these parts as to the transformer tank.

### Cutting square tubes, telescopic protective tubes, and protective cover

The square tubes, the telescopic protective tube and the protective cover are supplied over-length (graded standard lengths). You must cut these parts to the required size before mounting on the transformer. In rare cases, you also have to cut the inner tube of the telescopic protective tube to the desired length. The maximum permitted total drive shaft length of the drive - last column = 15 m.

| Standard lengths | Motor-drive unit | Manual drive |
|---|---|---|
| 400 | • | • |
| 600 | • | • |
| 900 | • | • |
| 1300 | • | • |
| 1700 | • | • |
| 2000 | • | • |
| 2500 | Not permitted | •[1)] |

Table 6: Graded standard lengths of square tubes

[1] l>2000 only possible for vertical installation without shaft protection! Telescopic protective tubes for manual drives with vertical dimensions V1> 2462 are to be supplied with vertical intermediate bearing, as with the motor-drive unit.

### 5.4.6.1 Fitting a vertical drive shaft without cardan joint

#### Permitted axial displacement

Minor axial displacements of the vertical drive shaft are permitted as long as they do not exceed 35 mm per 1000 mm of square tube length (this corresponds to 2°).

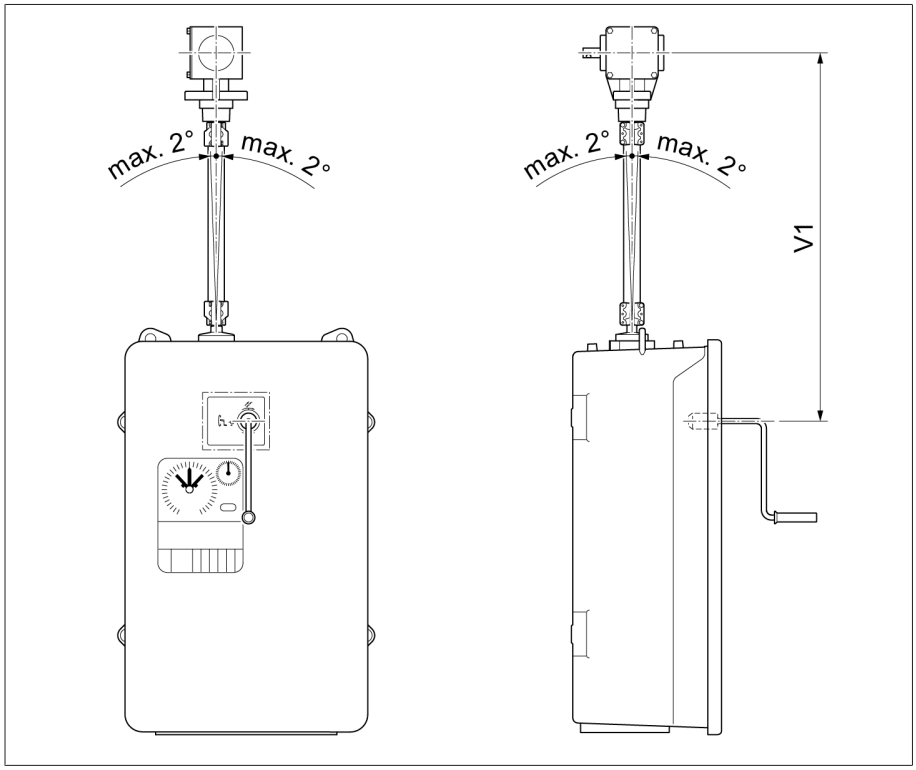


Figure 99: Permitted maximum axial displacement of vertical drive shaft without cardan joint

To fit the vertical drive shaft to the drive, proceed as follows:

1. ⚠ CAUTION! Switch off motor protective switch Q1 in the motor-drive unit (position O). If this is not done, the motor-drive unit may be started inadvertently and cause injuries.
2. Fasten the bevel gear to the transformer.

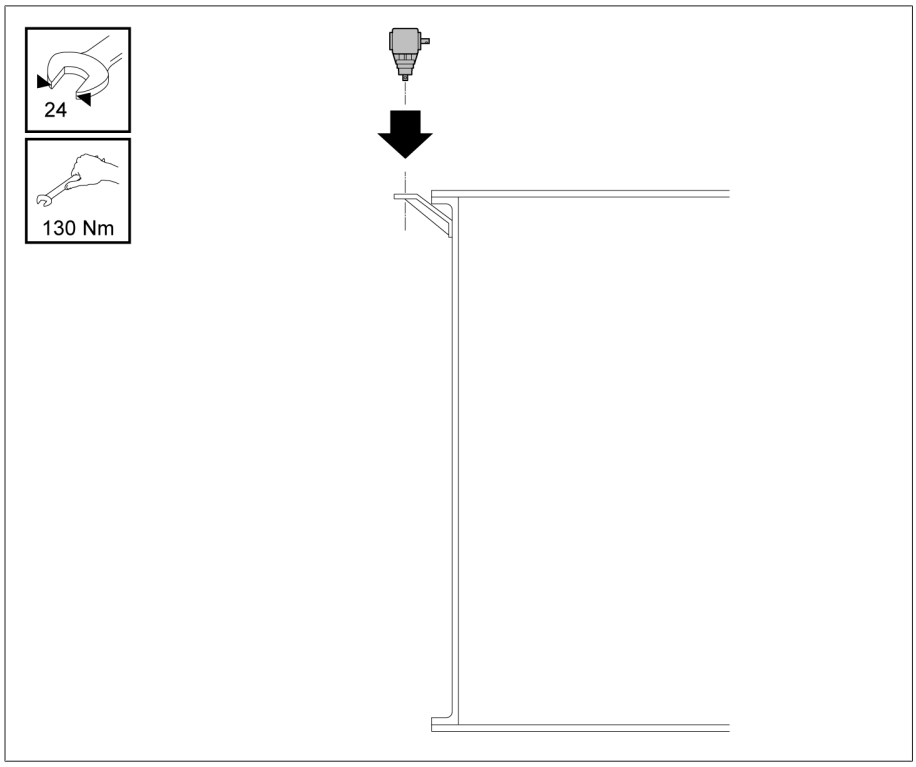


Figure 100: Bevel gear

3. Determine dimension A between shaft end of drive and shaft end of bevel gear. Shorten square tube to length of A–9 mm.

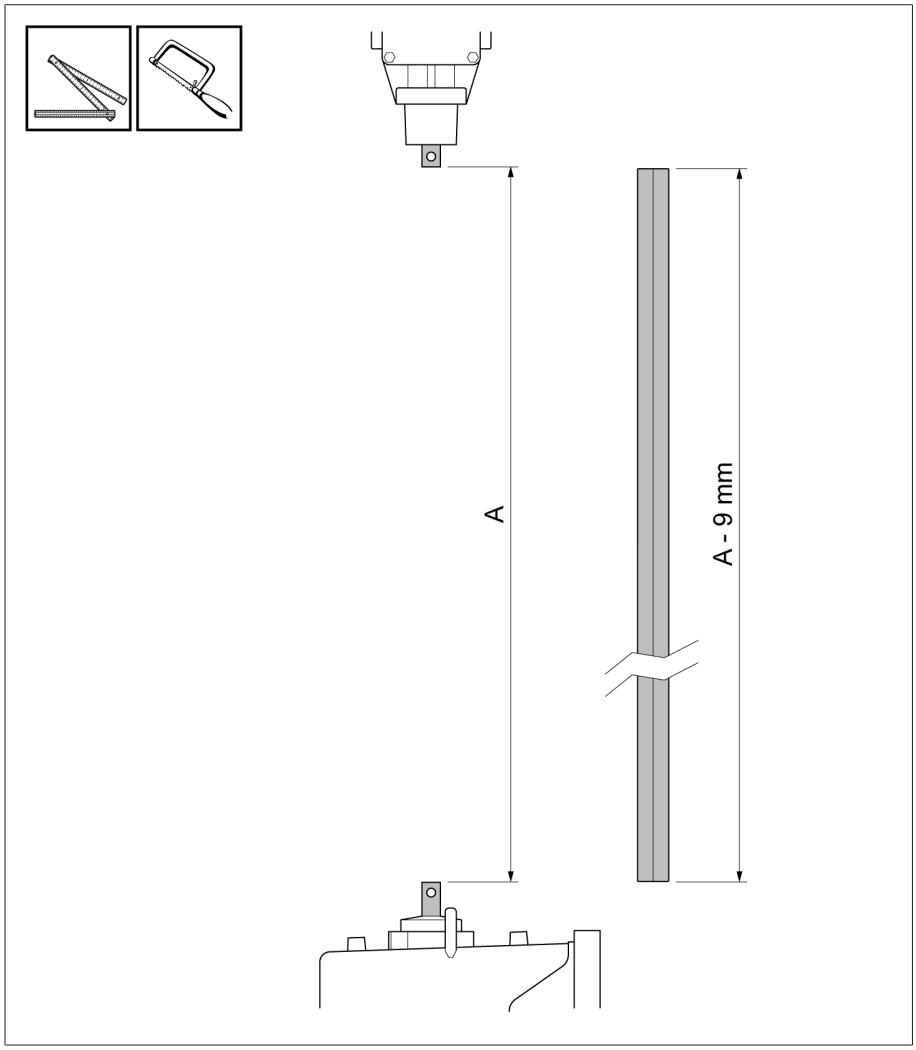


Figure 101: Shortening square tube

4. Deburr cut surfaces of square tube.

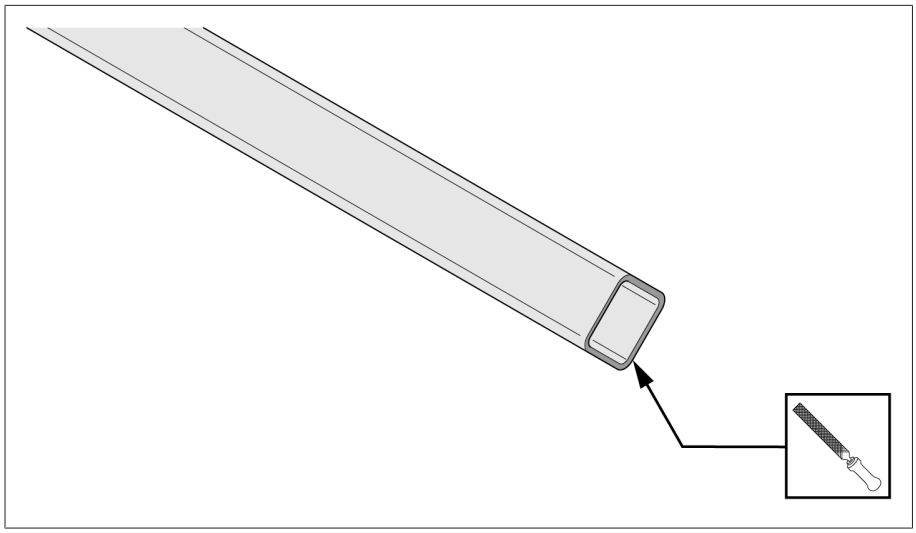

Figure 102: Deburring cut surfaces

5. Slide the loosely screwed-together coupling part onto square tube until stop is reached.

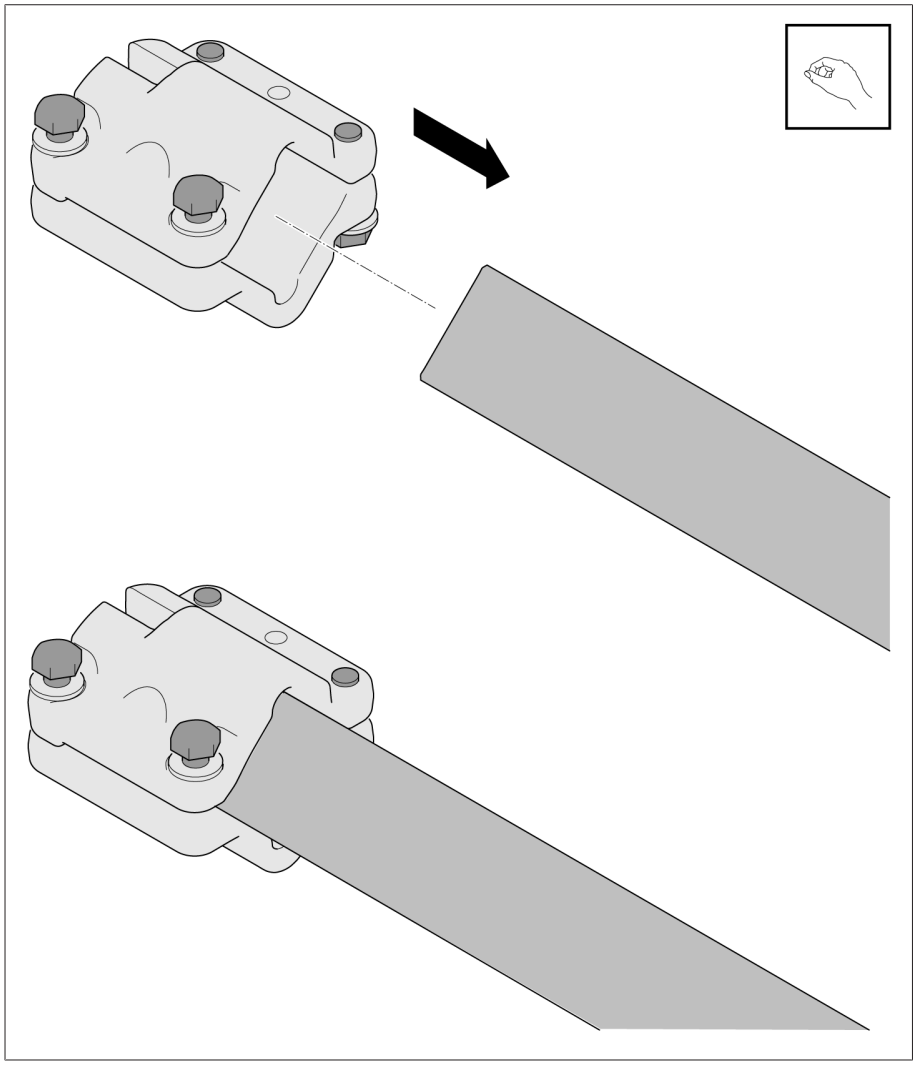

Figure 103: Slide coupling part onto square tube

6. Insert coupling bolt into shaft end of drive. Grease coupling part, coupling bolt and shaft end (e.g. ISOFLEX TOPAS L32). Slide square tube with coupling part onto shaft end.

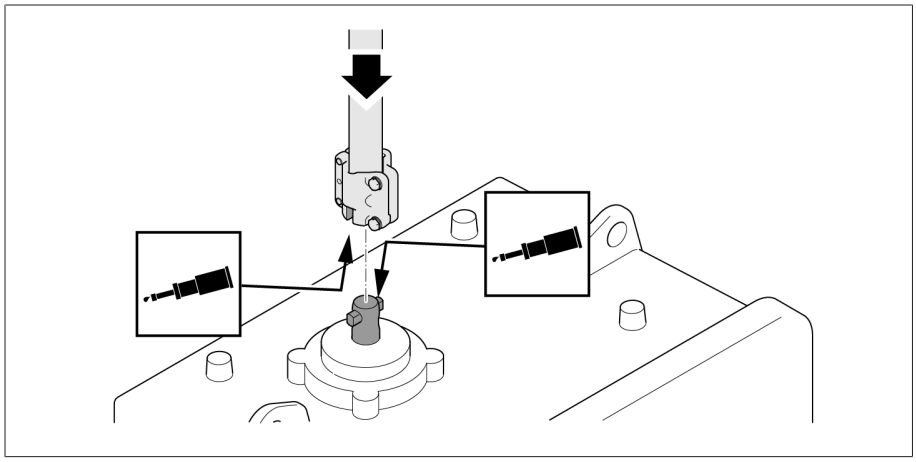

Figure 104: Sliding square tube with coupling part onto shaft end

7. Attach square tube to drive.

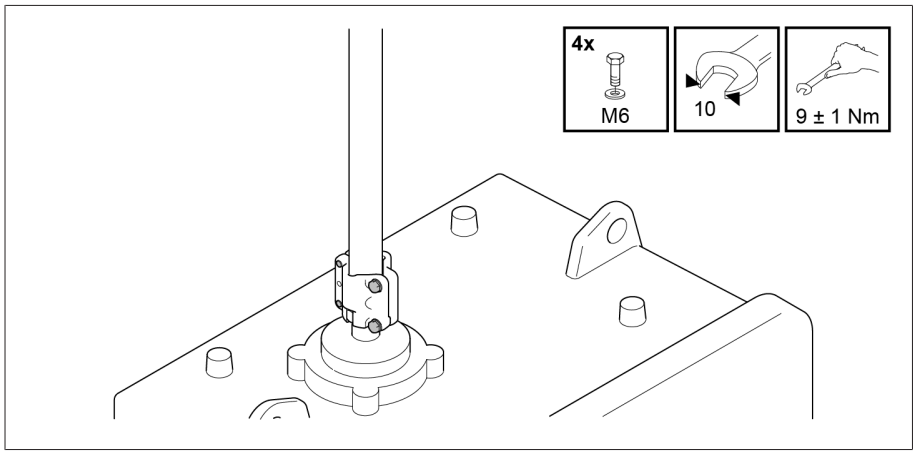


Figure 105: Attaching square tube to drive

8. Pivot square tube away from axis.

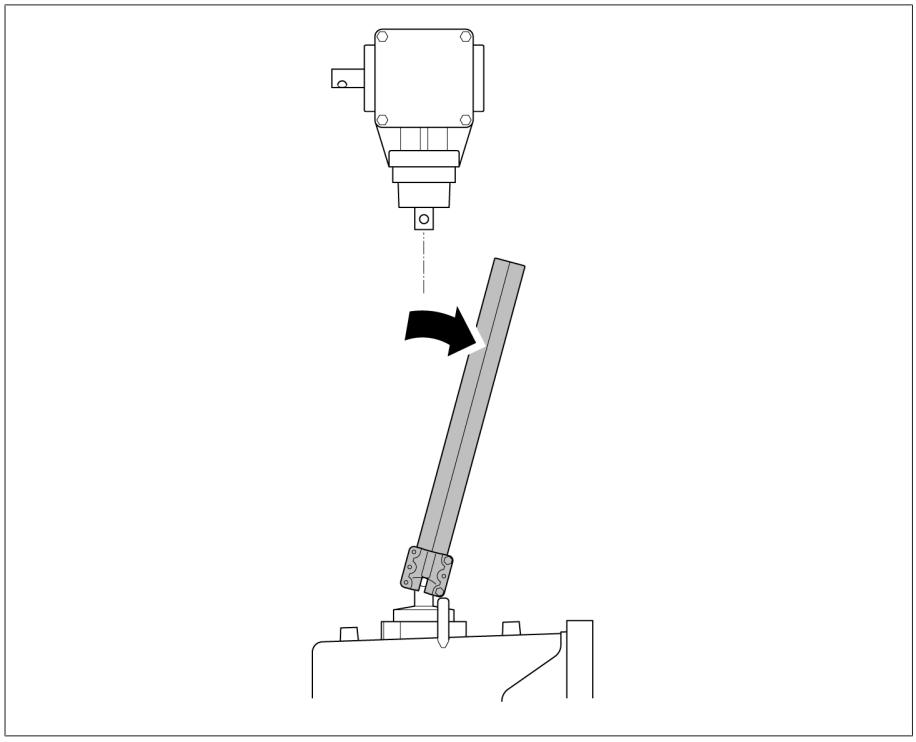

Figure 106: Pivoting square tube away from axis

9. When installing inner tube of telescopic protective tube, shorten on the side without slots if necessary. The minimum dimension for overlapping the two protective tubes is 100 mm.

Inner tube must not be deformed and must be deburred in order to slide easily in the outer tube.

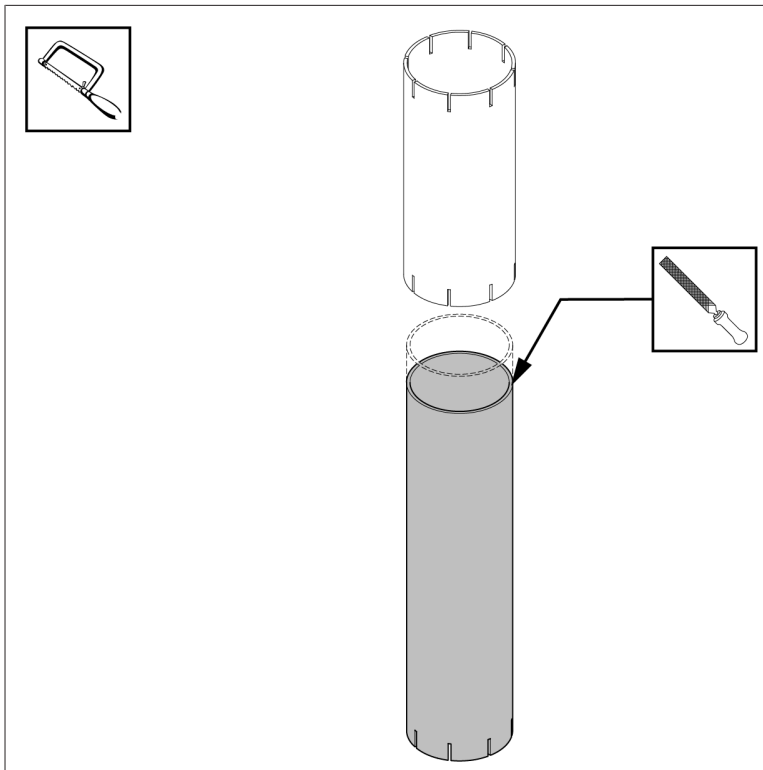

Figure 107: Deburring inner tube

| Dimension A (= distance between shaft end of drive and shaft end of bevel gear) | Inner tube | Outer tube |
|---|---|---|
| 170 mm...190 mm | Shorten to 200 mm | = 200 mm |
| 191 mm...1,130 mm | Dimension A + 20 mm | = 200 mm |
| 1,131 mm...1,598 mm | = 700 mm | = 1,150 mm |
| 1,599 mm...2,009 mm | = 1,150 mm | = 1,150 mm |

10. Slide outer tube over inner tube. When doing so, make sure that the non-slotted side of the inner tube is facing upwards. Slide telescopic protective tube onto square tube. Then slide hose clips over telescopic protective tube.

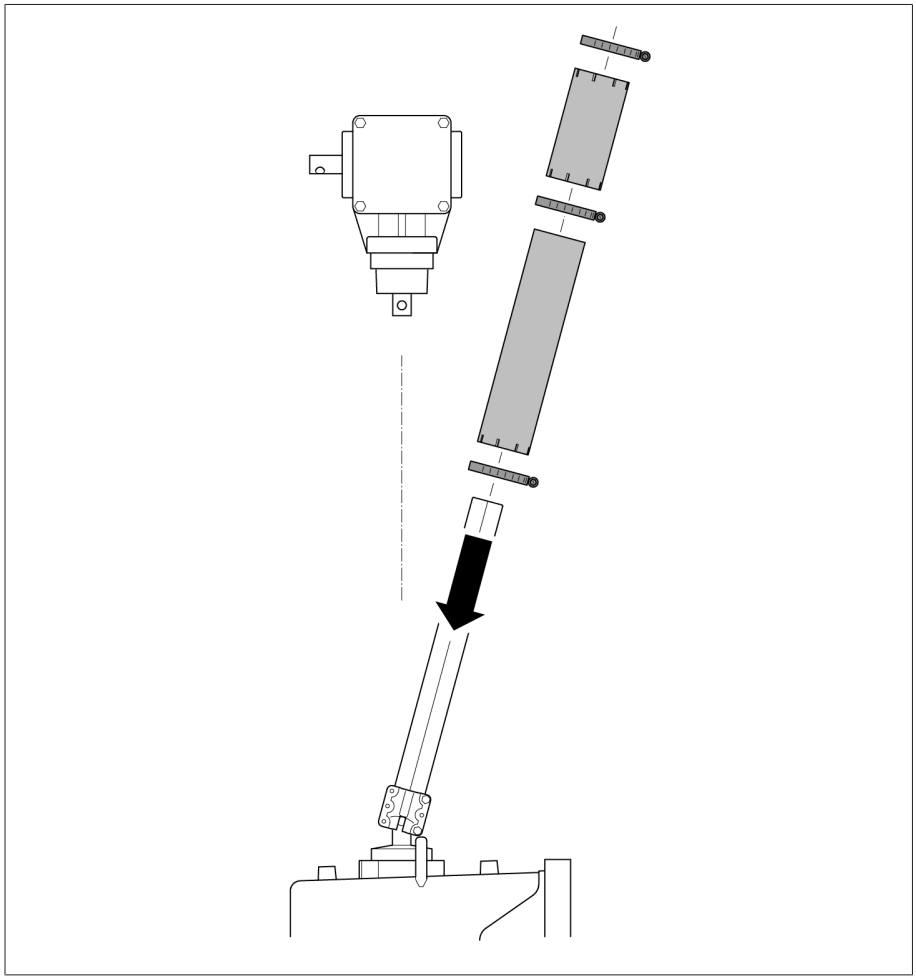

Figure 108: Sliding on telescopic protective tube

11. Place adapter ring over bearing collar of bevel gear and slide upwards. Insert coupling bolt into shaft end of bevel gear. Pivot square tube back to axis.

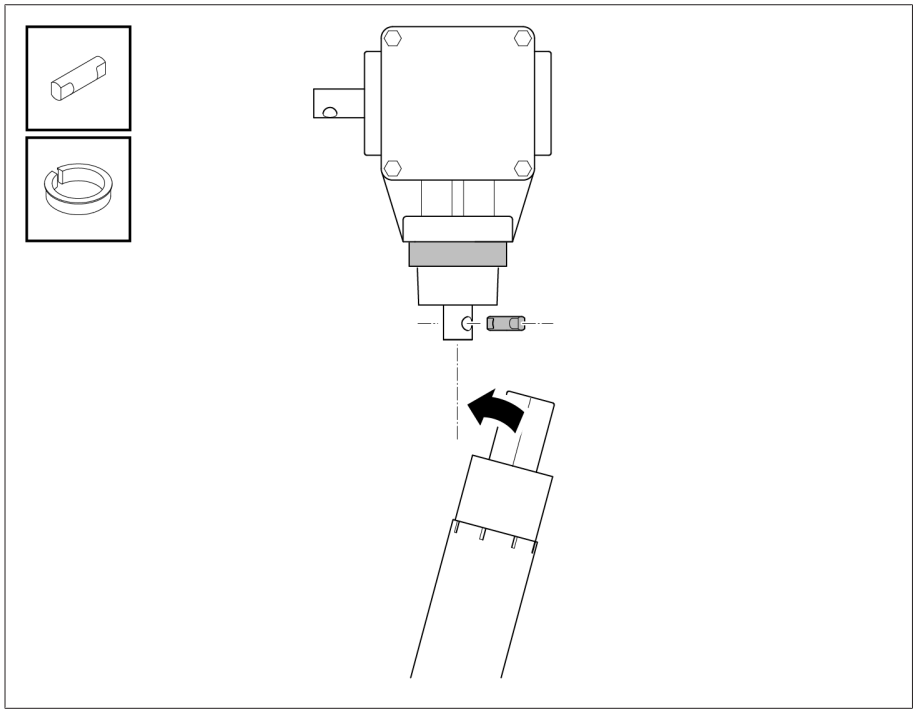

Figure 109: Fitting adapter ring and coupling bolt

12. Grease coupling brackets, coupling bolt and shaft end (e.g. ISOFLEX TOPAS L32) and secure square tube with coupling brackets on the bevel gear. Set a unilateral axial clearance of 3 mm between the coupling bolt and upper coupling piece.

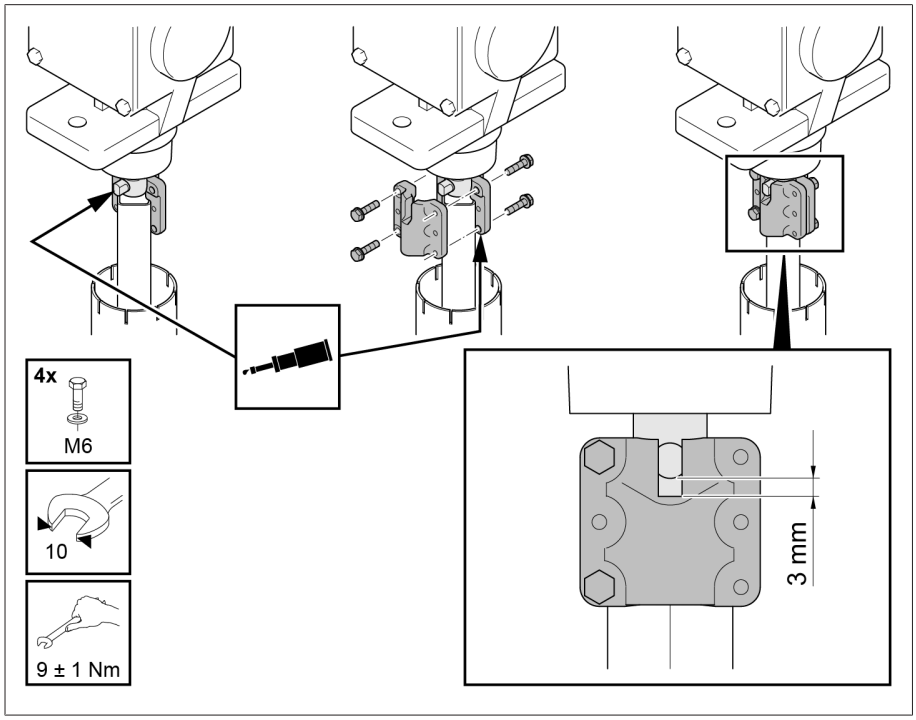


Figure 110: Mounting coupling brackets

13 Attach bottom protective tube (inner tube) with a hose clip to bearing collar
· of drive **1**. Then slide upper protective tube (outer tube) over adapter ring on bevel gear **2**. Secure upper protective tube to bottom protective tube with hose clip both at top end and at the connection point **3**.

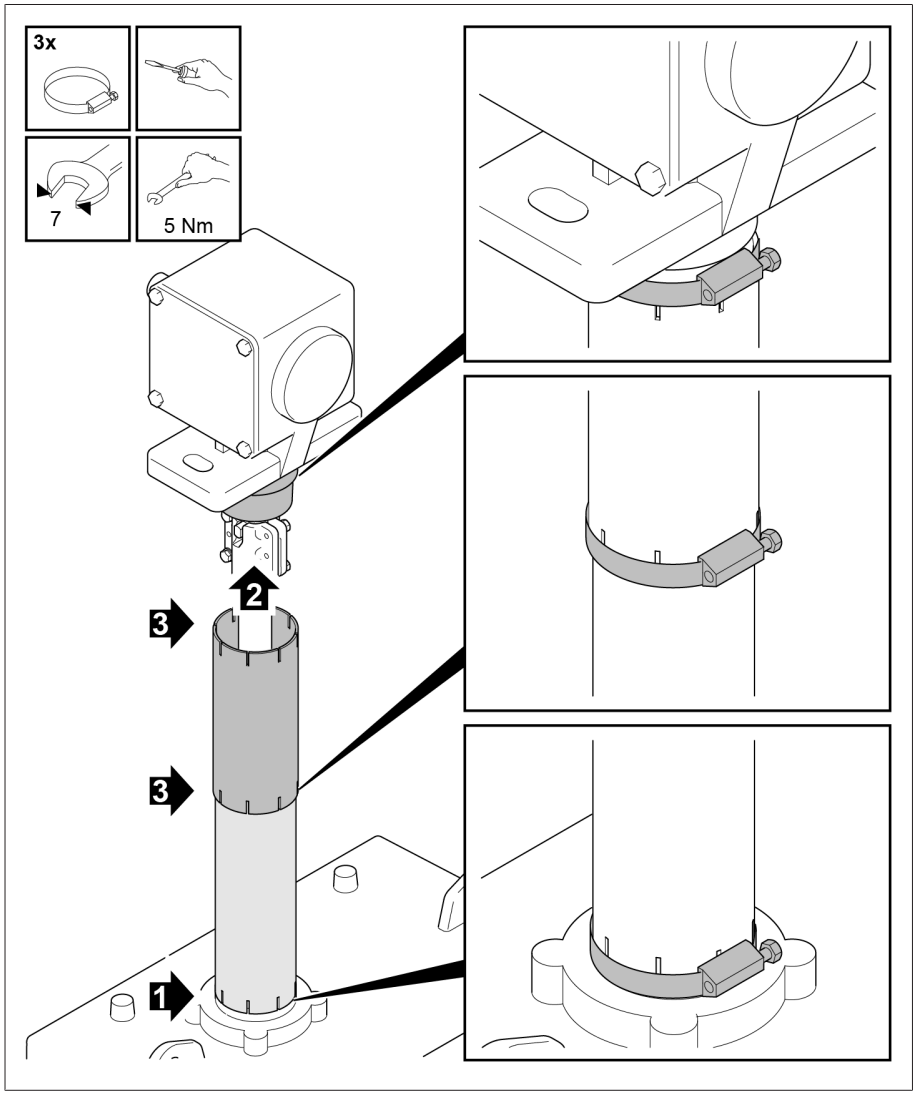

Figure 111: Mounting protective tube

### 5.4.6.2 Fitting a horizontal drive shaft without cardan joints

#### Permitted axial displacement

Minor axial displacements of the horizontal drive shaft are permitted as long as they do not exceed 35 mm per 1000 mm of square tube length (this corresponds to 2°).

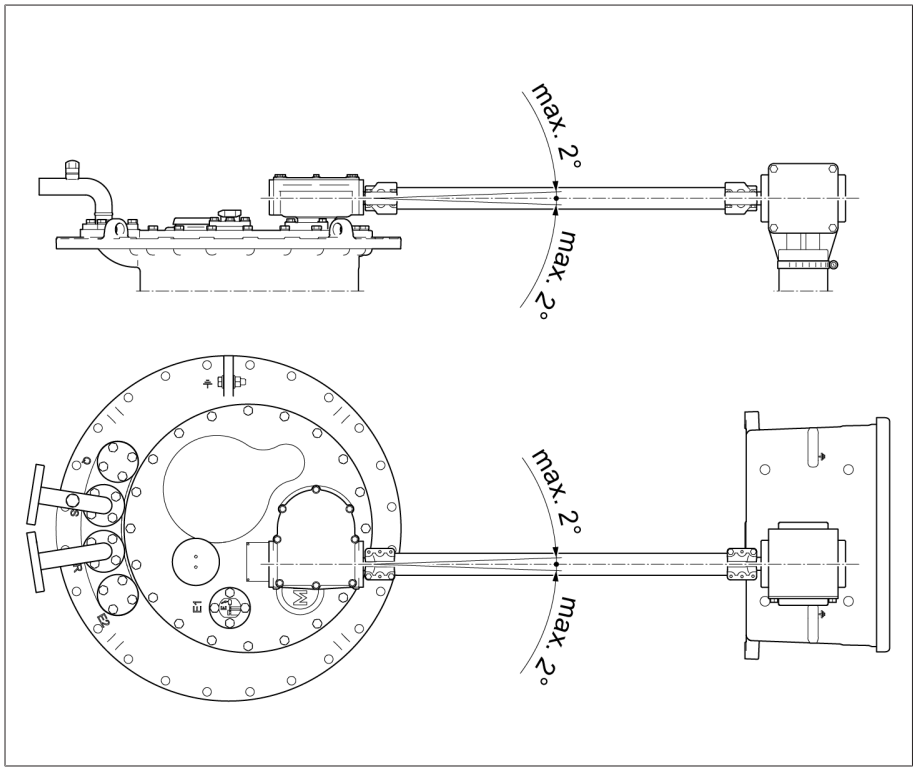


Figure 112: Permitted maximum axial displacement of horizontal drive shaft without cardan joint

#### Aligning upper gear unit on the on-load tap-changer head

In order to correctly install the horizontal drive shaft, under certain circumstances you may have to first align the upper gear unit so that the upper gear unit is flush with the bevel gear. With a multi-column on-load tap-changer model, it may also be necessary to align the upper gear units in the individual on-load tap-changer columns with each other in order to couple the on-load tap-changer columns together.

To do so, proceed as follows:

1. NOTICE! Damage to the on-load tap-changer due to alignment of the gear unit when the oil compartment is not completely full.Ensure that the oil compartment is filled completely with insulating fluid.
2. Loosen screws and turn pressure ring segments to one side.

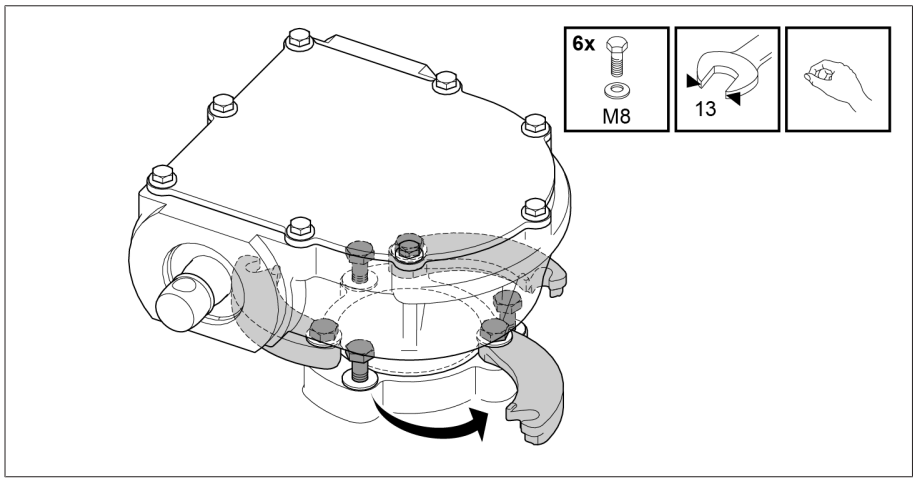


Figure 113: Pressure ring segments

3. NOTICE! Damage to the on-load tap-changer due to incorrect alignment of the upper gear unit. Align the gear unit so that the horizontal drive shaft is flush with the drive shaft of the gear unit. While aligning the gear unit, turn the unit's drive shaft so that its output shaft retains its original position.

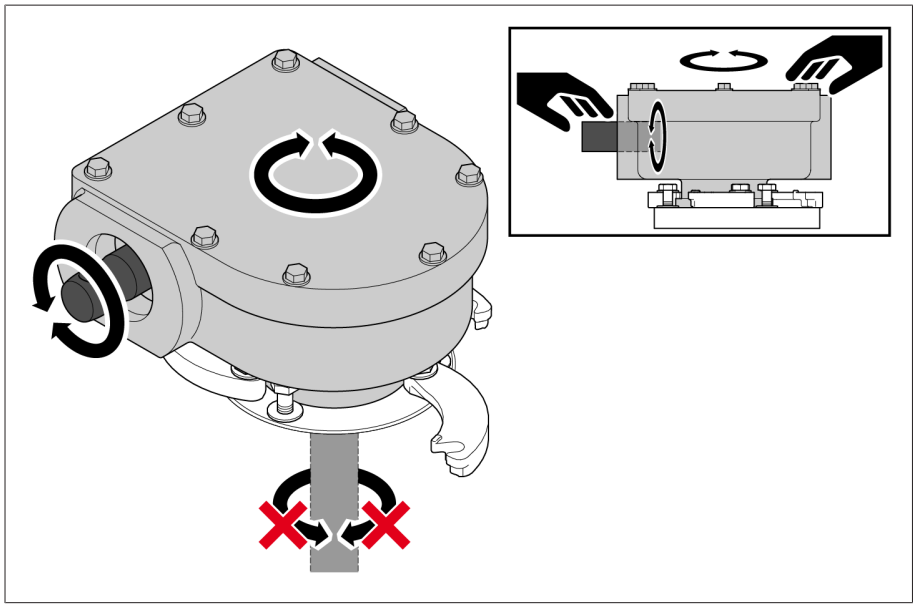

Figure 114: Aligning the gear unit

4. Swivel pressure ring segments back towards the gear unit and tighten the screws. Ensure that the locking washer is between the screw head and the pressure ring segment and that the pressure ring segments are firmly in contact with the gear unit housing.

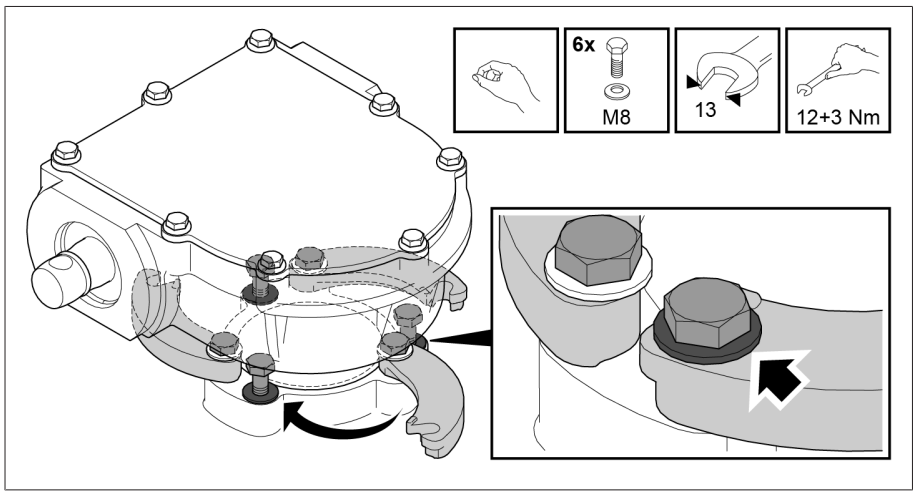


Figure 115: Securing the pressure ring segments

## Fitting horizontal drive shaft

> You can turn the temperature sensor if this is necessary for fitting the drive shaft.

To fit the horizontal drive shaft, proceed as follows.

1. Calculate dimension A between the shaft end of the upper gear unit and the shaft end of the bevel gear and shorten the square tube to length A–9 mm.

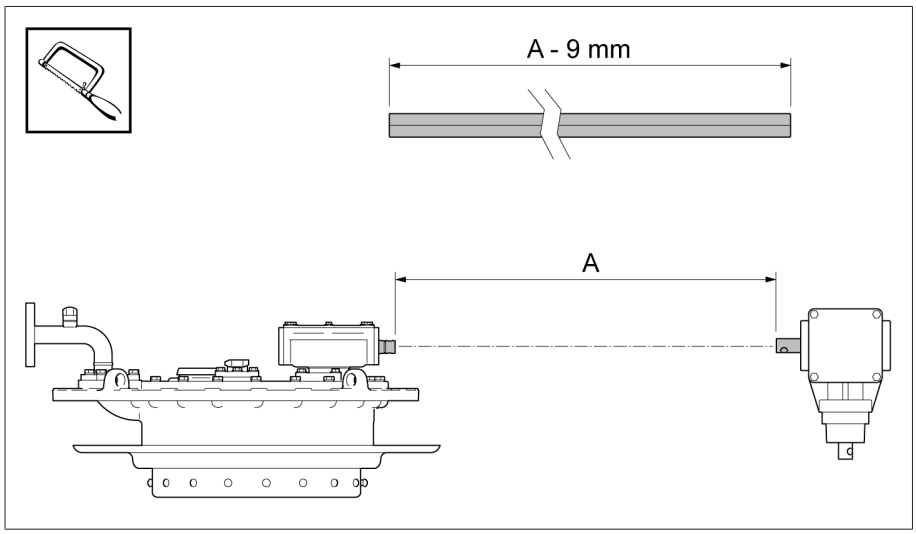


Figure 116: Shortening the square tube

2. Calculate inside width B between the housings of the upper gear unit and the bevel gear. Cut down the protective cover to B-2 mm and deburr the cut edges. Protect the protective cover against corrosion with a coat of paint.

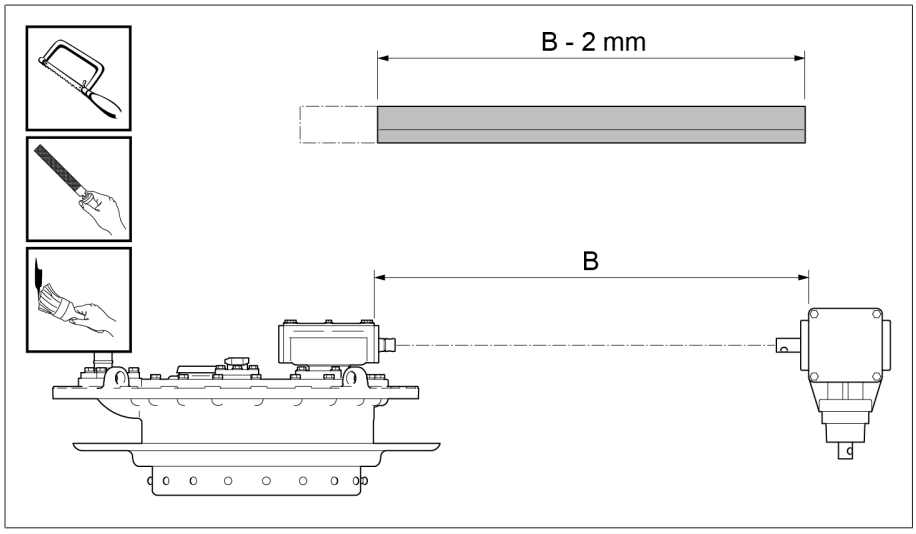


Figure 117: Shortening, deburring, and coating protective cover

3. Slide the loosely screwed-together coupling part onto the square tube until the stop is reached.

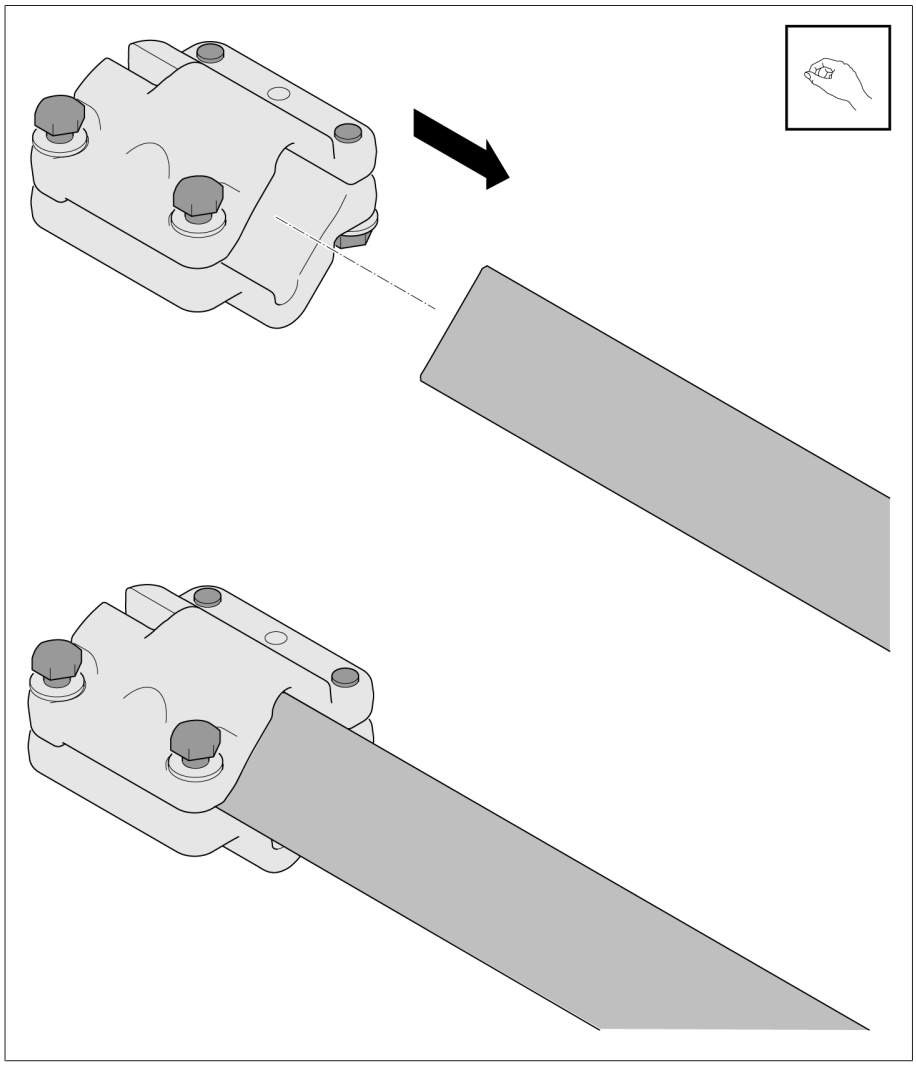

Figure 118: Sliding coupling part onto square tube

4. Grease the coupling bolt, coupling part and shaft end of the bevel gear (e.g. ISOFLEX TOPAS L32) and insert the coupling bolt into shaft end. Thread the hose clip onto the square tube and slide the square tube with the coupling part onto the shaft end.

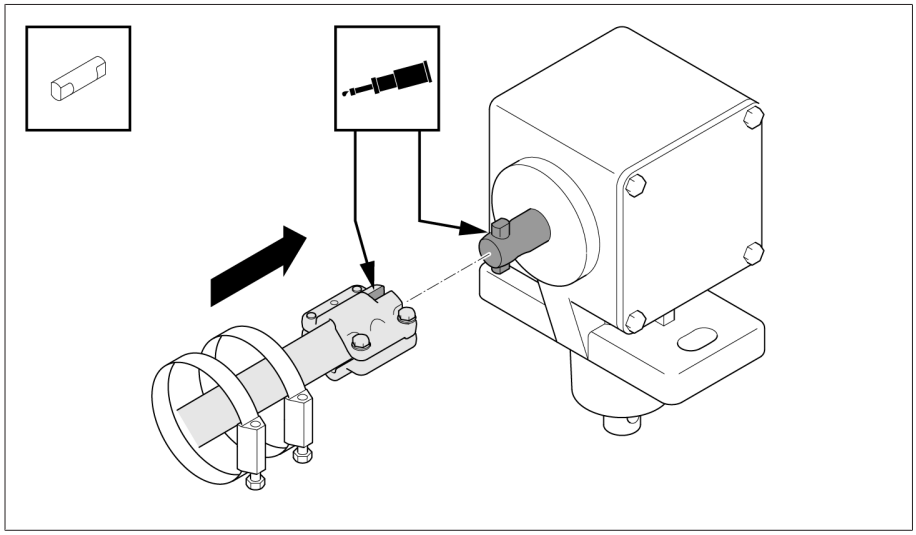

Figure 119: Sliding the square tube with the coupling part onto the shaft end

5. Secure square tube on bevel gear.

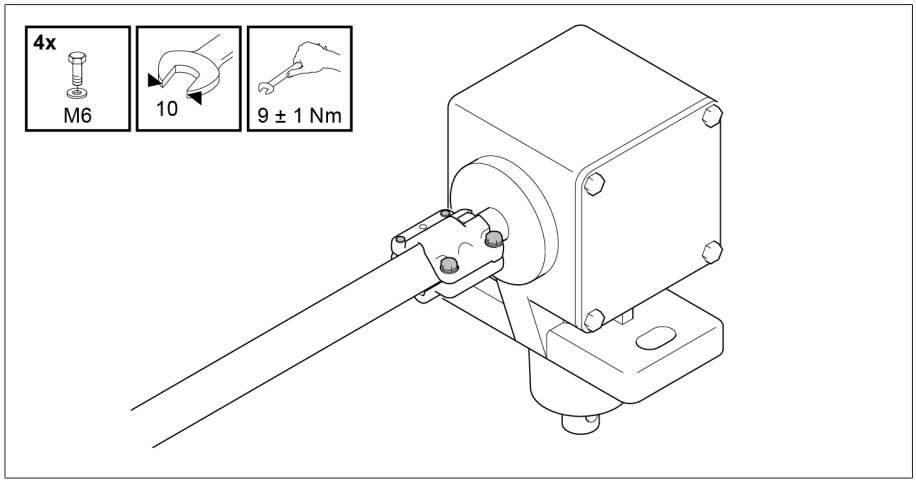


Figure 120: Securing the square tube on the bevel gear

6. Grease the coupling bolt, the coupling brackets and the shaft end of the upper gear unit (e.g. ISOFLEX TOPAS L32) and insert the coupling bolt into the shaft end. Secure the square tube with the coupling brackets on the upper gear unit.

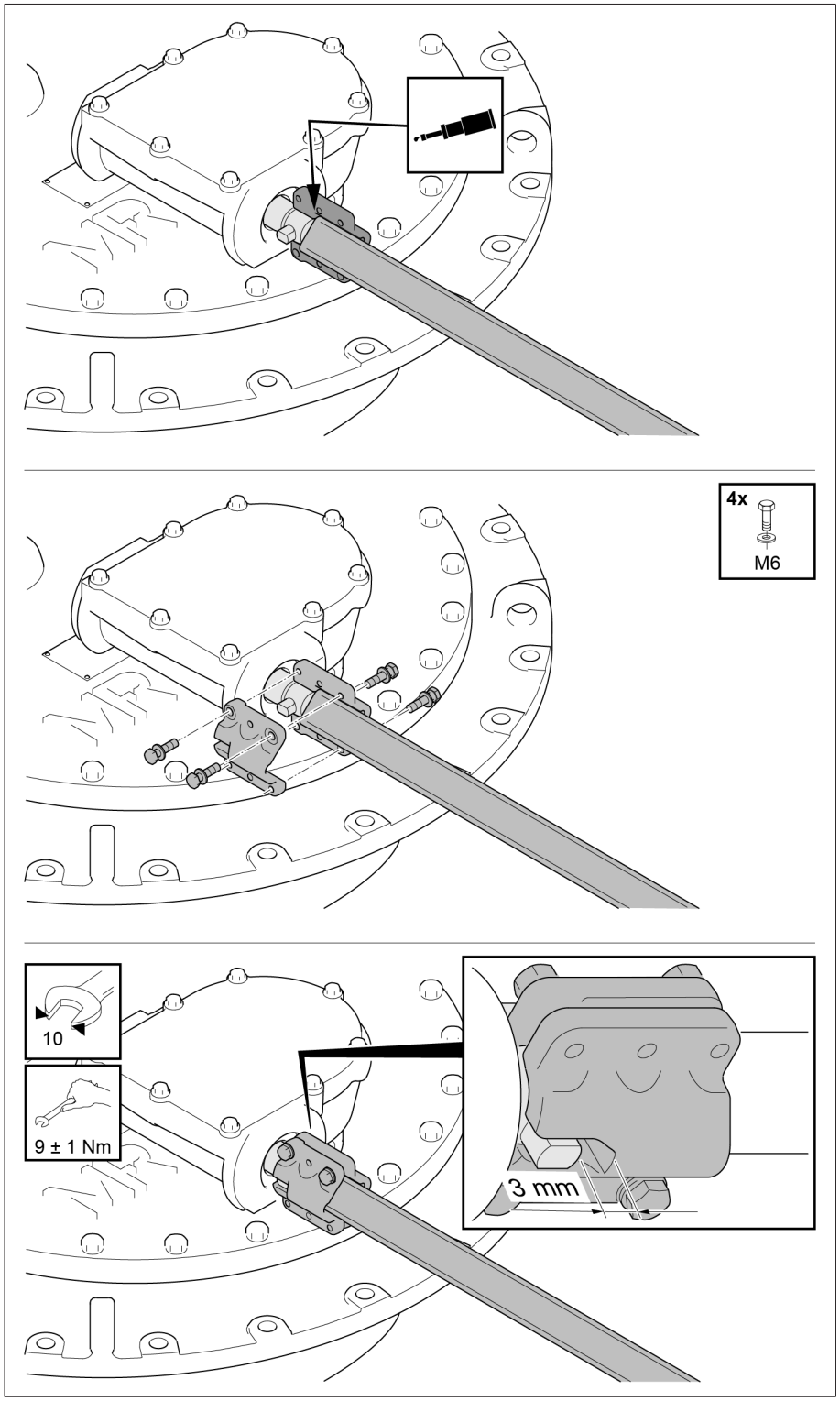


Figure 121: Secure the square tube on the upper gear unit.

7. Attach the shortened protective cover to the housing lugs on the on-load tap-changer head and the bevel gear. Secure each end of the protective cover with a hose clip.

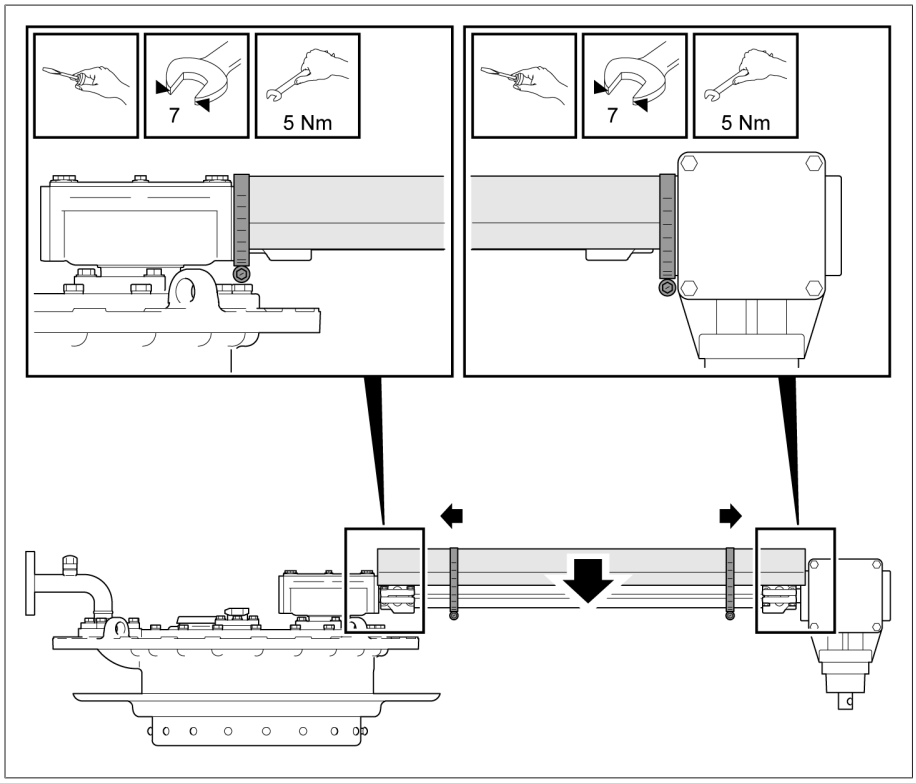


Figure 122: Fitting the protective cover

8. If using a bearing block or angle gear, attach caps to the protective cover. Before attaching the caps, drill 3 holes on the shortened side of the protective cover and 2 holes on the un-shortened side (each with Ø 3.5 mm) using a hand drill with drill bit

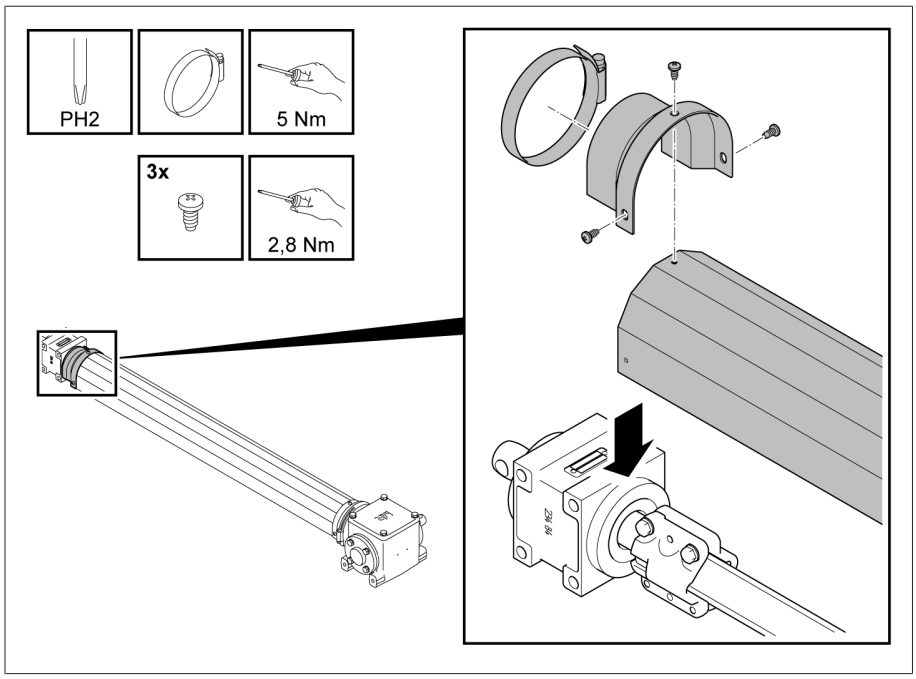


Figure 123: Bearing block caps

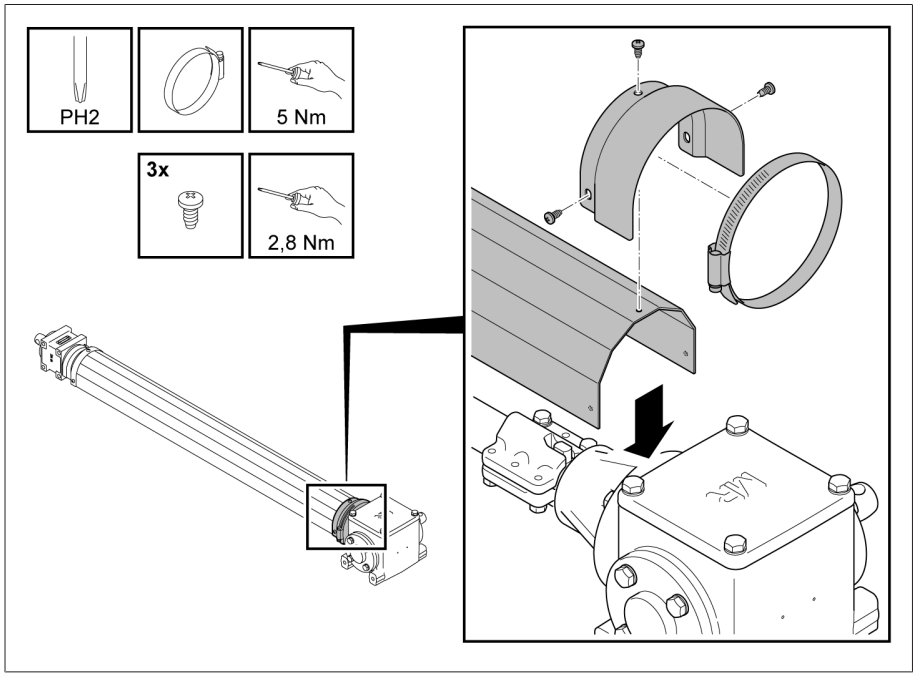

Figure 124: Angle gear caps

### 5.4.6.2.1 On-load tap-changer sets and combinations

For two-column and three-column on-load tap-changer models, the individual on-load tap-changer columns can be driven by a common motor-drive unit or several motor-drive units.

Regardless of the number of on-load tap-changer columns and motor-drive units, all on-load tap-changer columns and motor-drive units must be in the same operating position and must switch simultaneously (does not apply for ABC switching sequence).

To make sure that the on-load tap-changer columns that are driven by a common motor-drive unit switch simultaneously, you must couple these on-load tap-changer columns with horizontal drive shafts via the transformer cover. The offset between these on-load tap-changer columns during switching may be a maximum of 1 tap-change indicator section.

To couple the on-load tap-changer columns, proceed as follows:

#### Aligning upper gear unit on the on-load tap-changer head

In order to correctly install the horizontal drive shaft, under certain circumstances you may have to first align the upper gear unit so that the upper gear unit is flush with the bevel gear. With a multi-column on-load tap-changer model, it may also be necessary to align the upper gear units in the individual on-load tap-changer columns with each other in order to couple the on-load tap-changer columns together.

To do so, proceed as follows:

1. NOTICE! Damage to the on-load tap-changer due to alignment of the gear unit when the oil compartment is not completely full.Ensure that the oil compartment is filled completely with insulating fluid.
2. Loosen screws and turn pressure ring segments to one side.

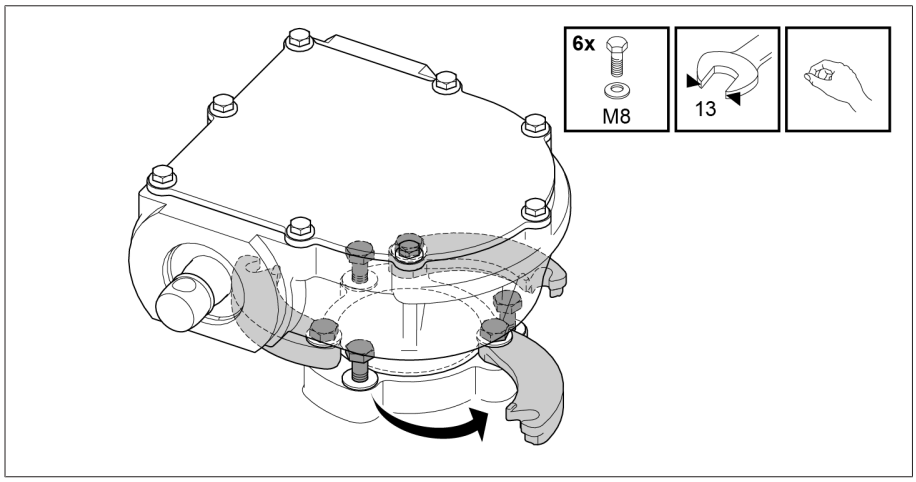


Figure 125: Pressure ring segments

3. NOTICE! Damage to the on-load tap-changer due to incorrect alignment of the upper gear unit. Align the gear unit so that the horizontal drive shaft is flush with the drive shaft of the gear unit. While aligning the gear unit, turn the unit's drive shaft so that its output shaft retains its original position.

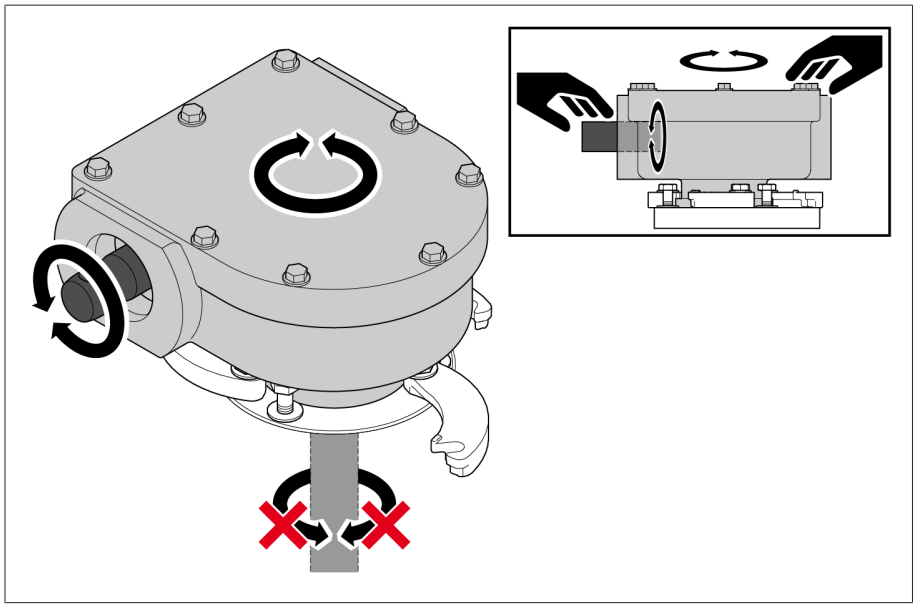

Figure 126: Aligning the gear unit

4. Swivel pressure ring segments back towards the gear unit and tighten the screws. Ensure that the locking washer is between the screw head and the pressure ring segment and that the pressure ring segments are firmly in contact with the gear unit housing.

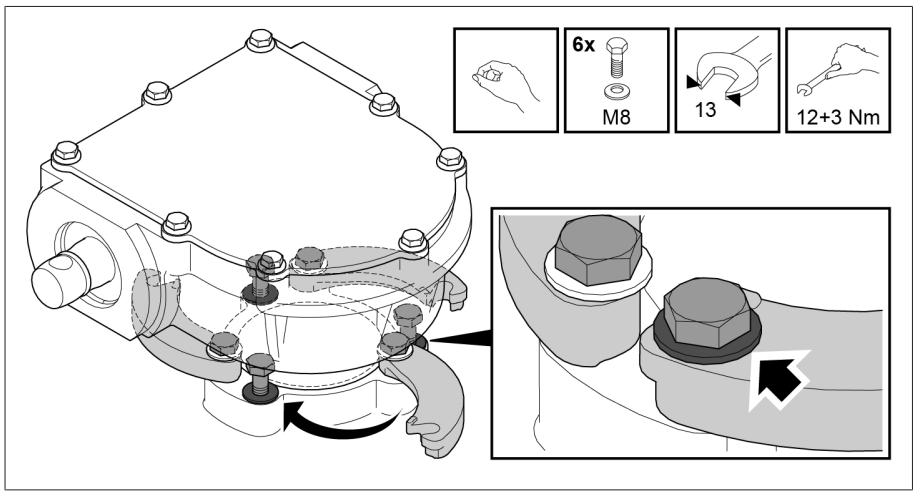


Figure 127: Securing the pressure ring segments

## Coupling the on-load tap-changer columns together

1. Ensure that all arrows on the drive shaft flange under the stamped serial number point in the same direction. The direction of the arrow indicates the direction of rotation when turning the hand crank of the motor-drive unit clockwise.
2. Switch the on-load tap-changer columns one after another to the next operating position. To do so, turn the shaft end on each gear unit counter-clockwise one after another until the on-load tap-changer column switches position.

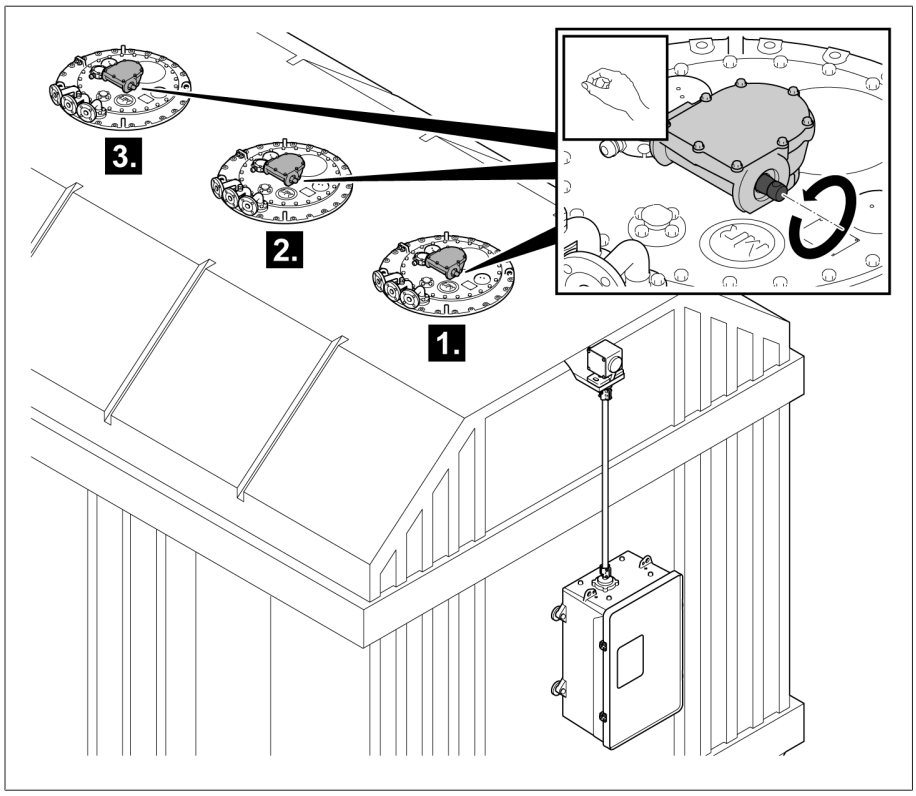


Figure 128: Manually switching the on-load tap-changer columns

3. Check that all on-load tap-changer columns are in the same position.

4. Couple the on-load tap-changer columns together via horizontal drive shafts. When doing so, begin with the on-load tap-changer column that is closest to the motor-drive unit.

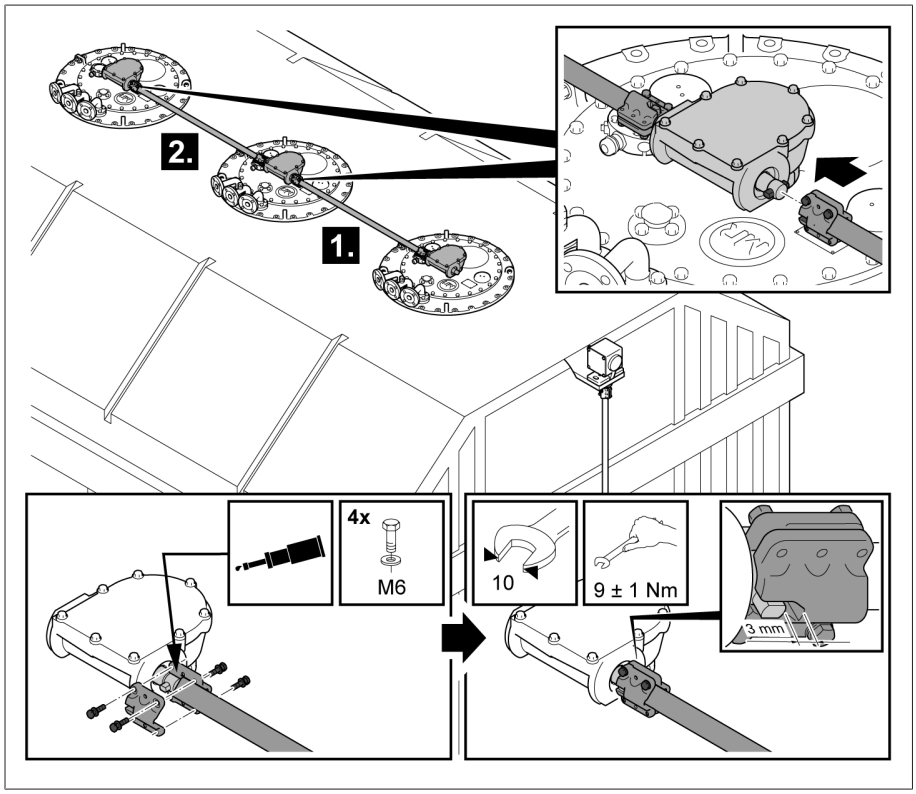


Figure 129: Coupling the on-load tap-changer columns

5. *NOTICE!* Damage to the on-load tap-changer columns due to incomplete tap-change operation. After installing all drive shafts, crank the drive shaft of the gear unit through a further 2.5 revolutions counter-clockwise to complete the tap-change operation fully.

6. Switch the on-load tap-changer columns to the adjustment position by turning the drive shaft on the gear unit clockwise. Once the adjustment position has been reached and the on-load tap-changer columns have been switched, crank the drive shaft of the upper gear unit through another 2.5 revolutions clockwise to correctly complete the tap-change operation.

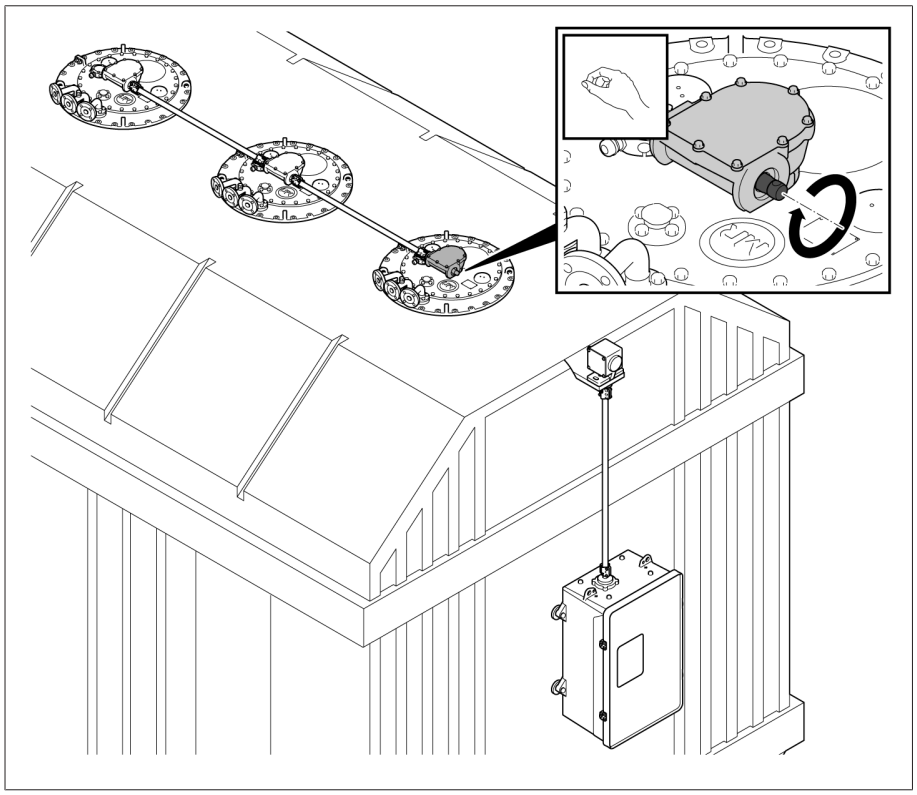

Figure 130: Switching the on-load tap-changer columns to the adjustment position

7. Ensure that all on-load tap-changer columns switch simultaneously. Here, a minimal offset of max. 0.25 revolutions on the drive shaft of the gear unit is permitted.
8. Check that all on-load tap-changer columns are in the same position.

9. Install the drive shaft between the bevel gear and the gear unit.

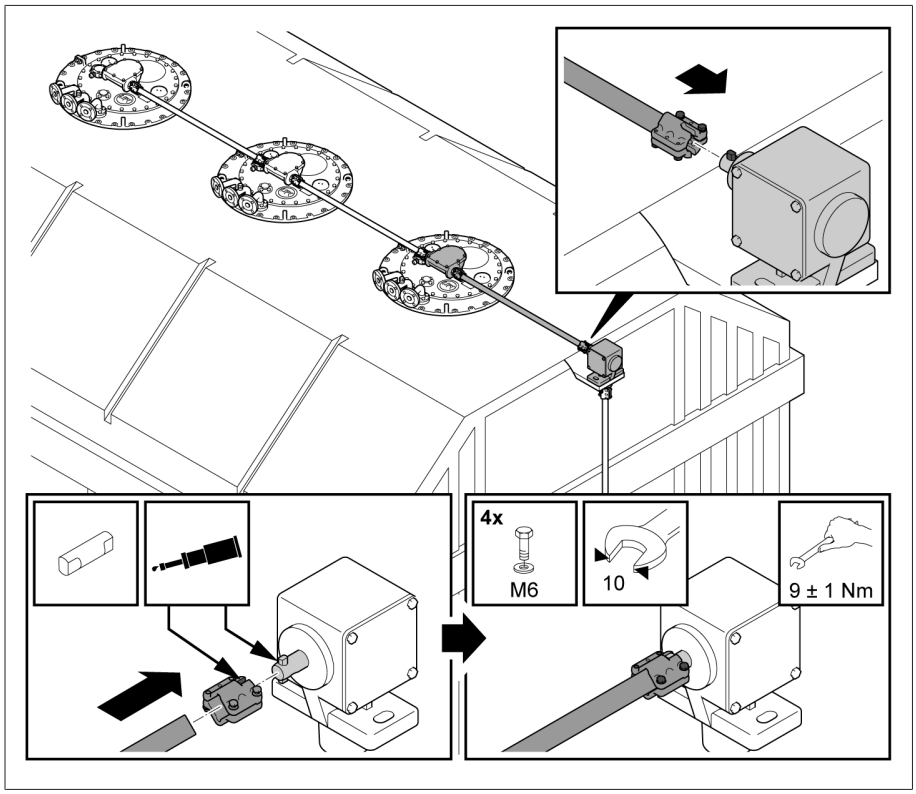


Figure 131: Installing the drive shaft between the bevel gear and the gear unit

### 5.4.6.3 Fitting drive shaft with cardan joints

Installation of the drive shaft with cardan joints is mainly designed as a vertical drive shaft between motor-drive unit and bevel gear.

Technically, a horizontal design is also possible. However, if using a horizontal design, please note that the protective cover supplied must be adapted accordingly and a cardan joint with an inner hub diameter of 25 mm must be used if you want to use the cardan joint on the upper gear unit.

## Permitted axial displacements

An axial displacement of 20° is permitted for the vertical and horizontal drive shaft with cardan joints.

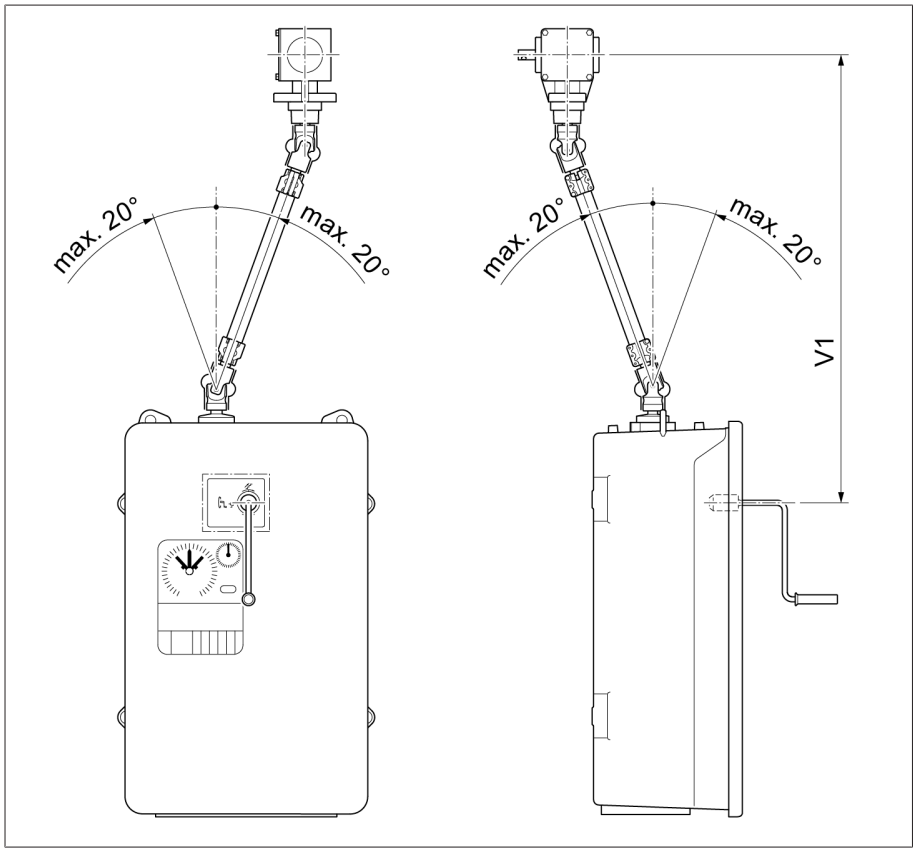


Figure 132: Permitted maximum axial displacement of vertical drive shaft with cardan joints

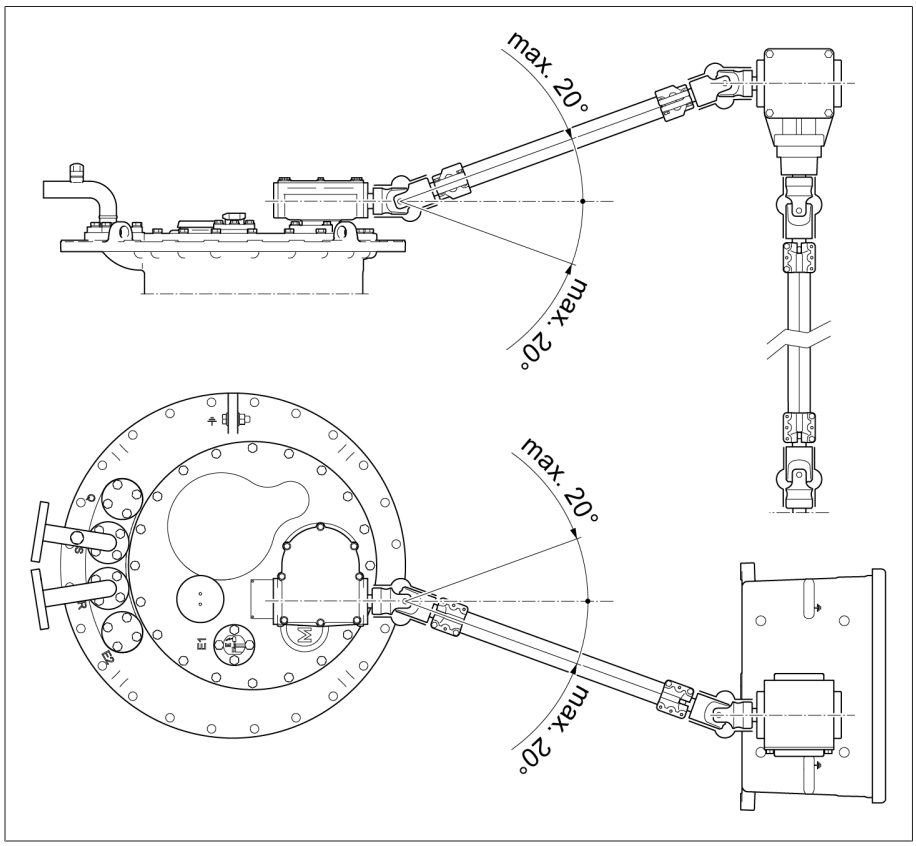


Figure 133: Permitted maximum axial displacement of horizontal drive shaft with cardan joints

NOTICE

## Damage to property!

Improper mounting of the cardan joint may result in damage or malfunctions.

- Ensure that the folding cardan joint does not damage the expansion bellows during mounting.
- Ensure that the angle of deflection α is no greater than 20°.
- Ensure that the angle of deflection α is the same on both cardan joints.

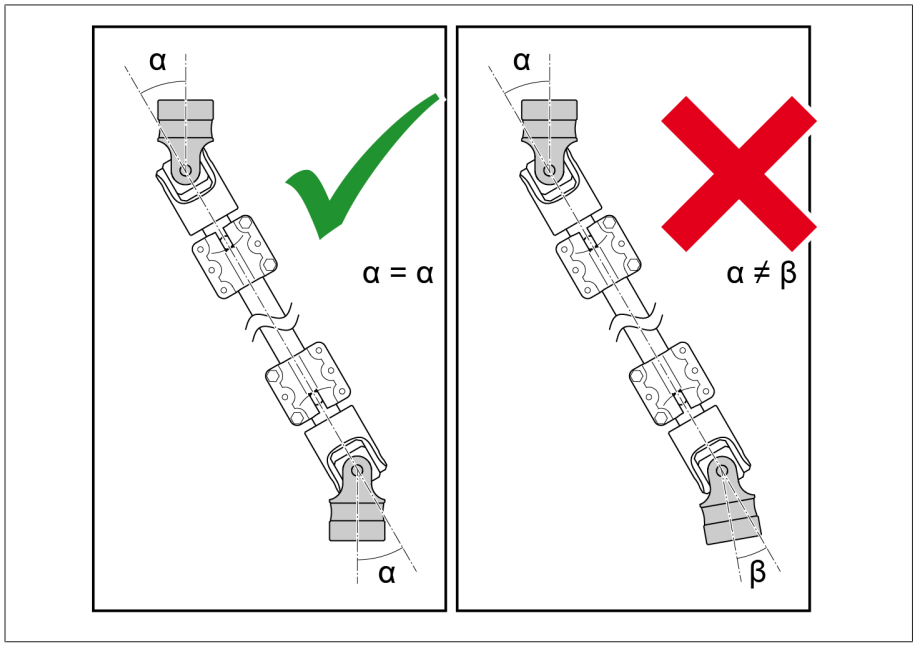


Figure 134: Angle of deflection α

To fit the drive shaft with cardan joints, proceed as follows:

1. Grease coupling bolts, coupling brackets, and shaft ends, e.g. ISOFLEX TOPAS L 32.

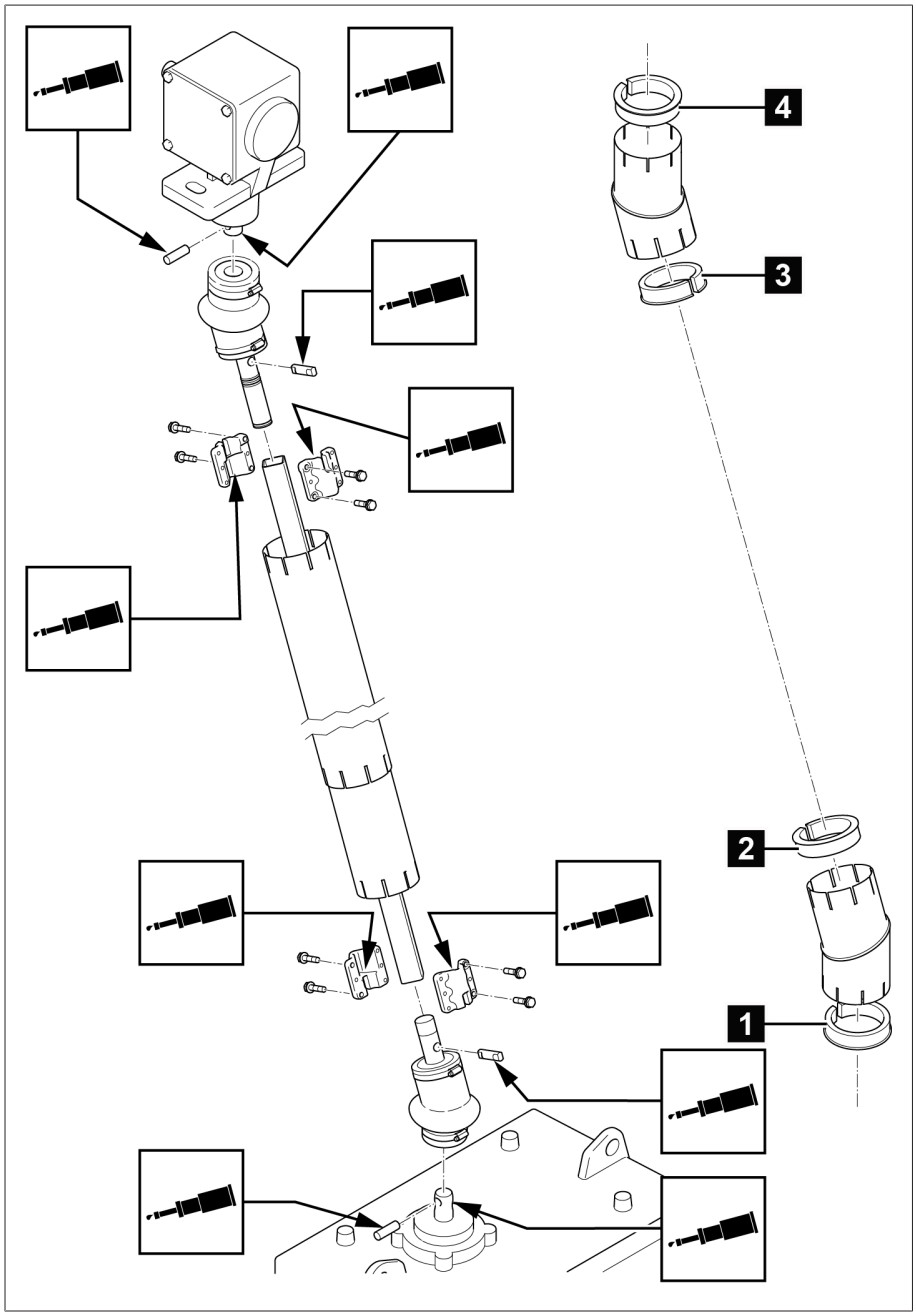


Figure 135: Greasing coupling bolts, coupling brackets, and shaft ends

| Position | Name | Quantity |
|---|---|---|
| 1 below on the ED | Adapter ring Ø 82×102 | 1 |
| 2 | Adapter ring Ø 87×102.5 | 1 |
| 3 | Adapter ring Ø 94.5×102.5 | 1 |
| 4 above on the CD6400 | Adapter ring Ø 71×102.5 | 1 |

2. Insert adapter rings into the collar of the rotating protective tube **1**. Fit the two parts of pivotable protective tube together **2** and turn them towards one another **3** to set the corresponding angle.

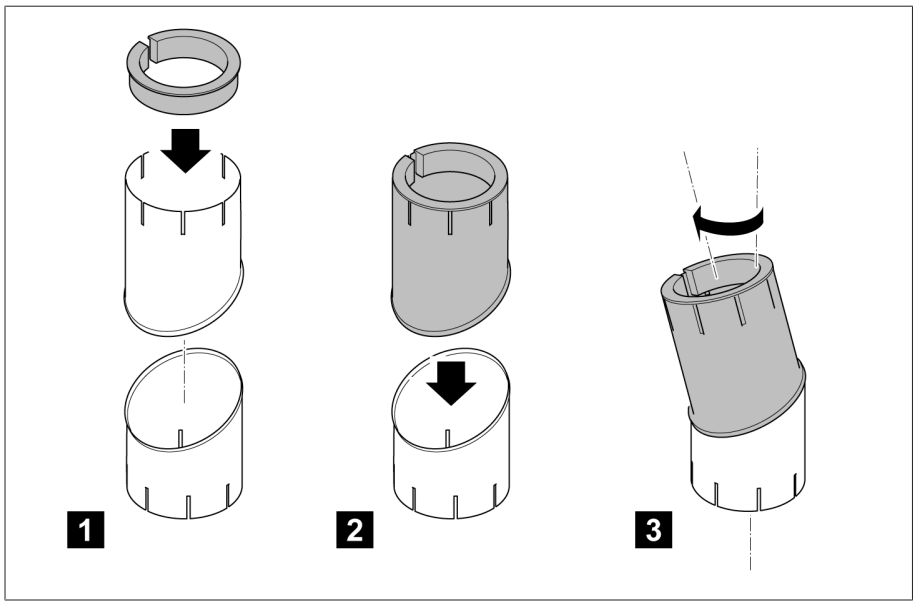


Figure 136: Inserting adapter in pivotable protective tubes

3. When supplied, the cardan joints are fitted with coupling bolts **1**. To mount on the shaft end, the following steps must be taken: Remove hose clip **2**. Slide up expansion bellows **3**. Remove coupling bolt **4**. Slide cardan joint over device's output shaft **5**. Push in coupling bolt **6**. Slide expansion bellows over this **7**. Secure expansion bellows with hose clip **8**.

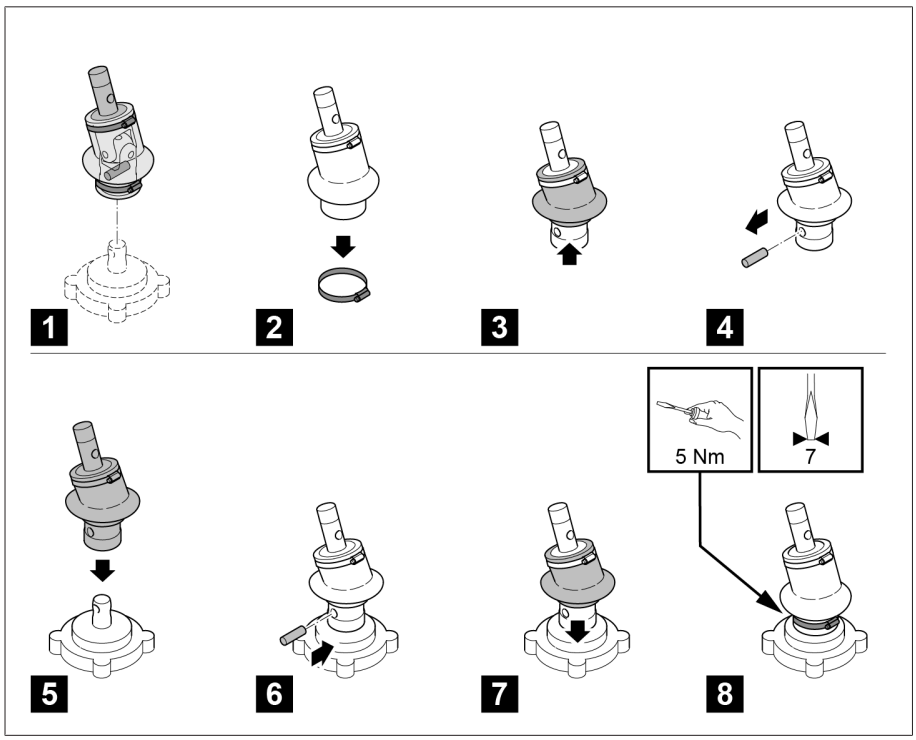


Figure 137: Mounting cardan joints

4. Connect shorter cardan joint supplied to shaft end of motor-drive unit with coupling bolt.

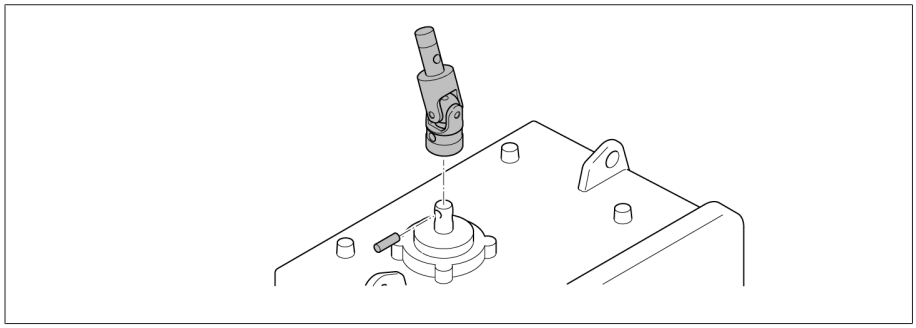

Figure 138: Attaching cardan joint on shaft end of motor-drive unit

5. *NOTICE!* Attach second, longer cardan joint to the bevel gear such that the position of both cardan joint lugs is the same on the bevel gear and motor-drive unit. If this is not done, damage or malfunctions may result.

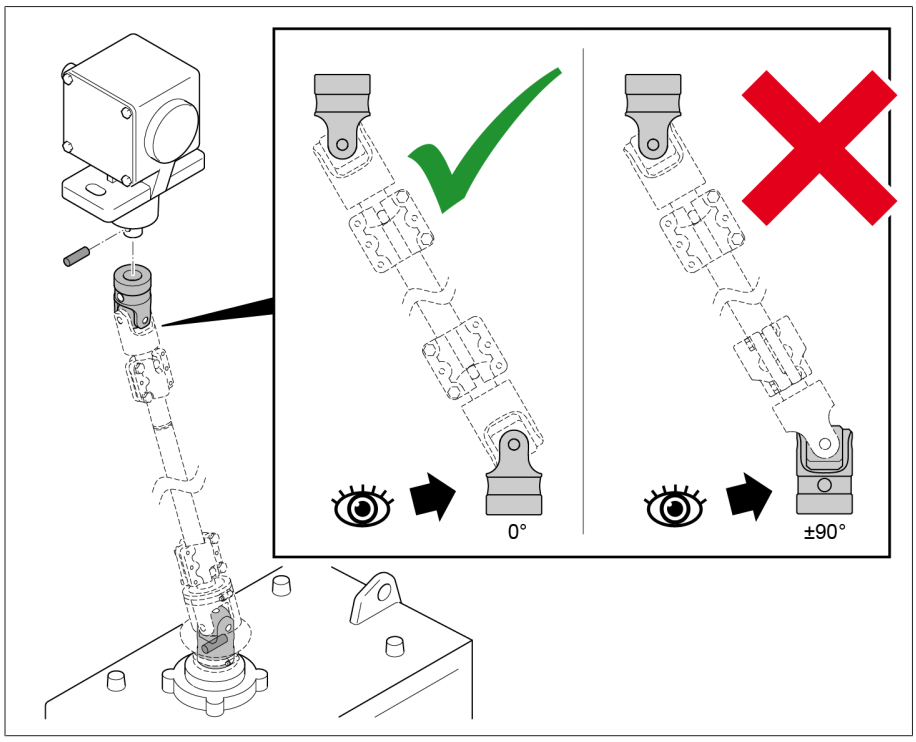


Figure 139: Fitting second cardan joint on bevel gear

6. Secure expansion bellows with hose clip.

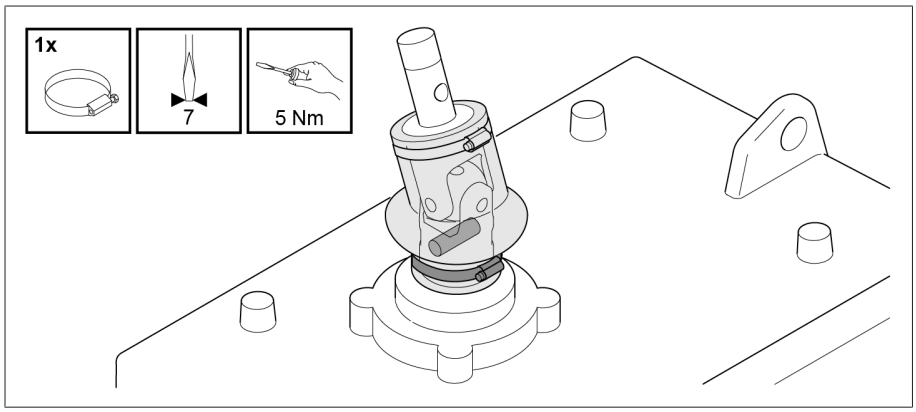


Figure 140: Securing expansion bellows with hose clip

7. Provisionally connect loose shaft ends of the joints to an angle bar and align so that they are in line.

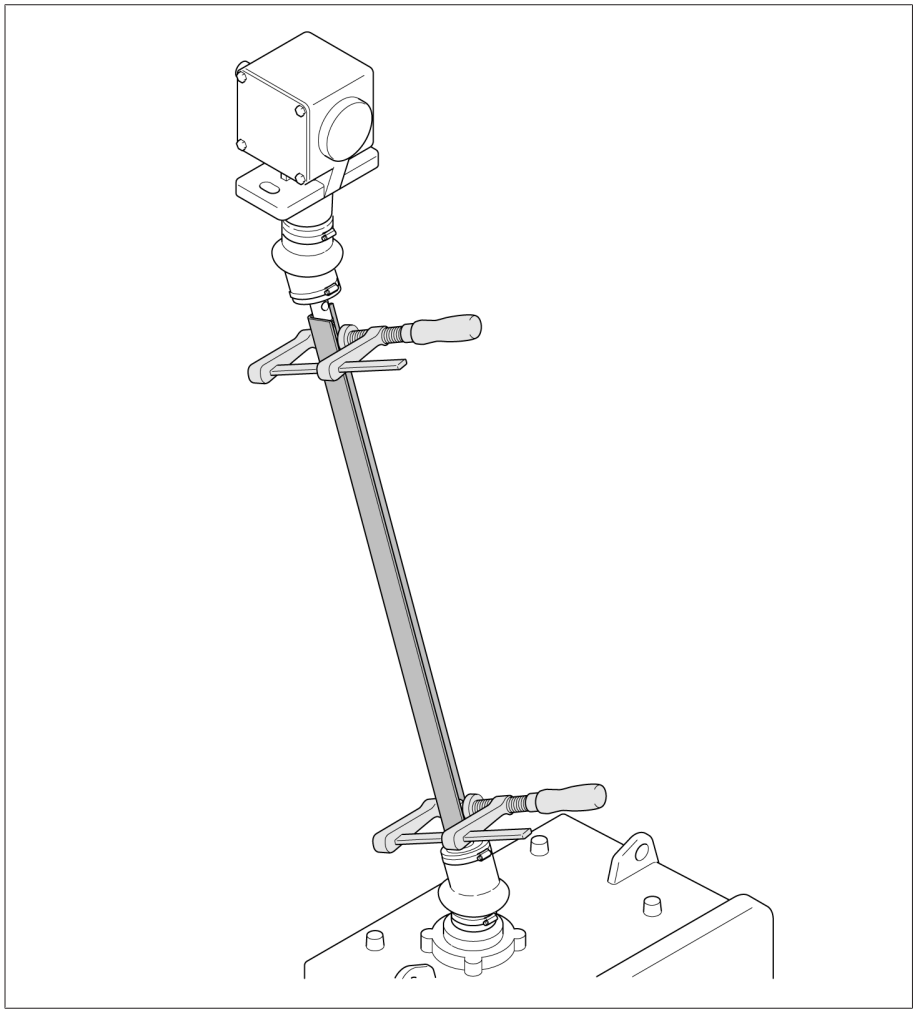

Figure 141: Connecting shaft ends with angle bar

8. Determine dimension A between the shaft ends. Cut square tube to LR = A + 100 mm (LR = length of square tube). Deburr cut surfaces of square tube.

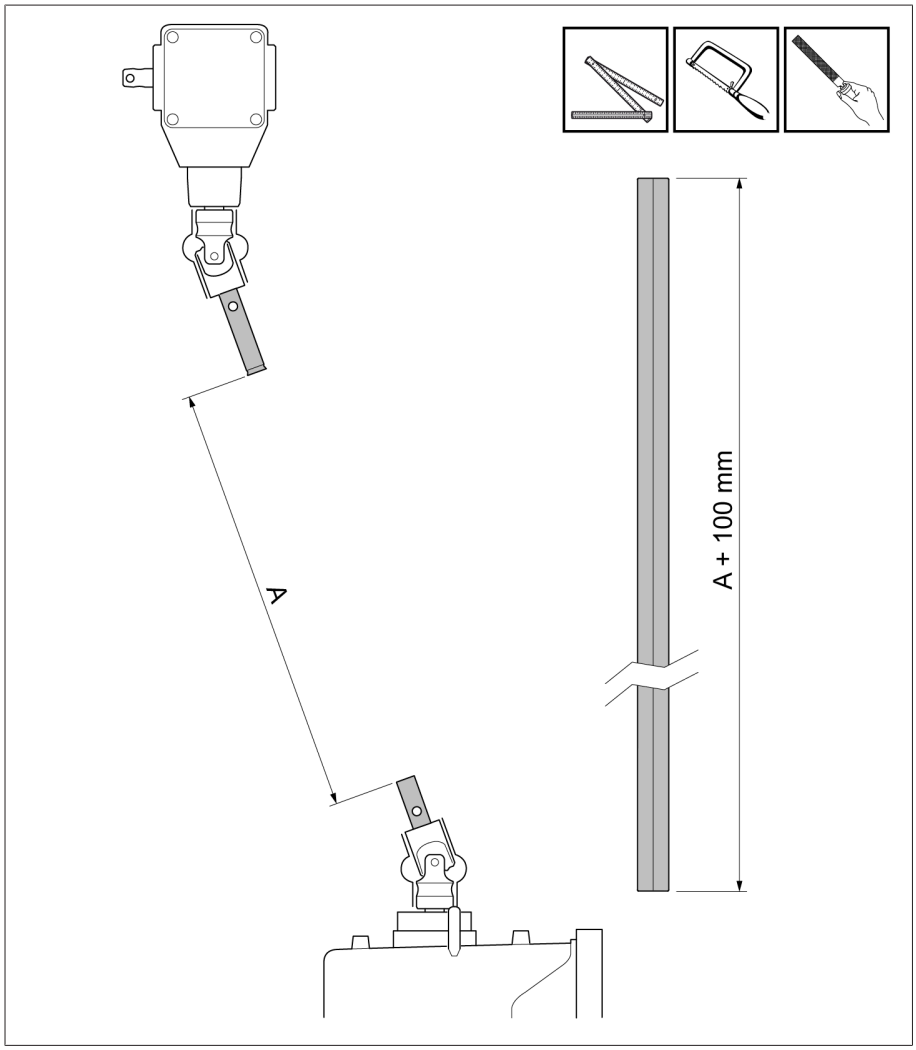


Figure 142: Shortening square tube

9. Before beginning installation, shorten both telescopic tubes to the corresponding dimension A (A = dimension between both cardan joint ends) and deburr.

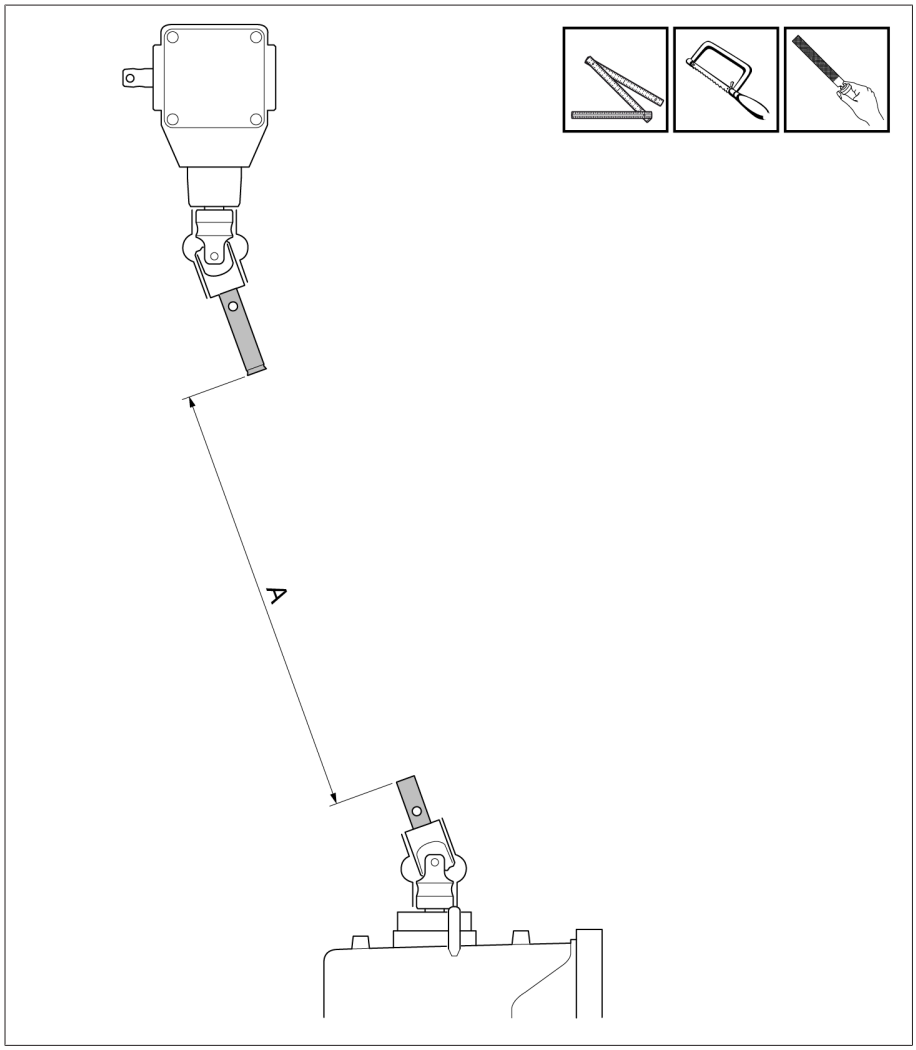


Figure 143: Shortening telescopic tubes

| Dimension A (= distance between shaft ends of the drive and the bevel gear) | Inner tube | Outer tube |
|---|---|---|
| 260 mm | Shorten to 200 mm | 200 mm |
| 261 mm...760 mm | Shorten to A-60 mm | 200 mm |
| 761 mm...1,090 mm | 700 mm | Shorten to A-60 mm |
| 1,091 mm...1,700 mm | 700 mm | 1,150 mm |
| 1,701 mm...1,900 mm | 1,150 mm | 1,150 mm |

10. Fit one adapter ring to bearing collar of motor-drive unit and fit other adapter ring to bearing collar of bevel gear.

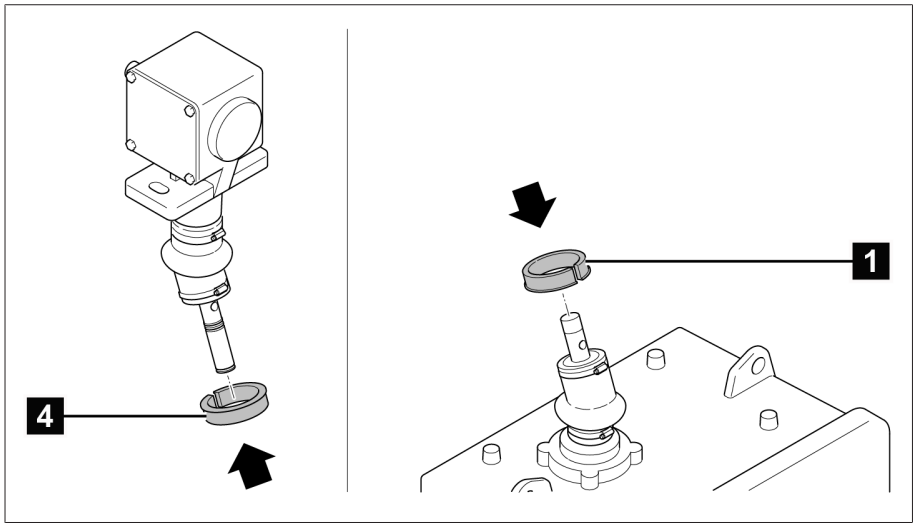


Figure 144: Fitting adapters

11. Slide previously shortened and deburred square tube over upper cardan joint end until stop is reached.

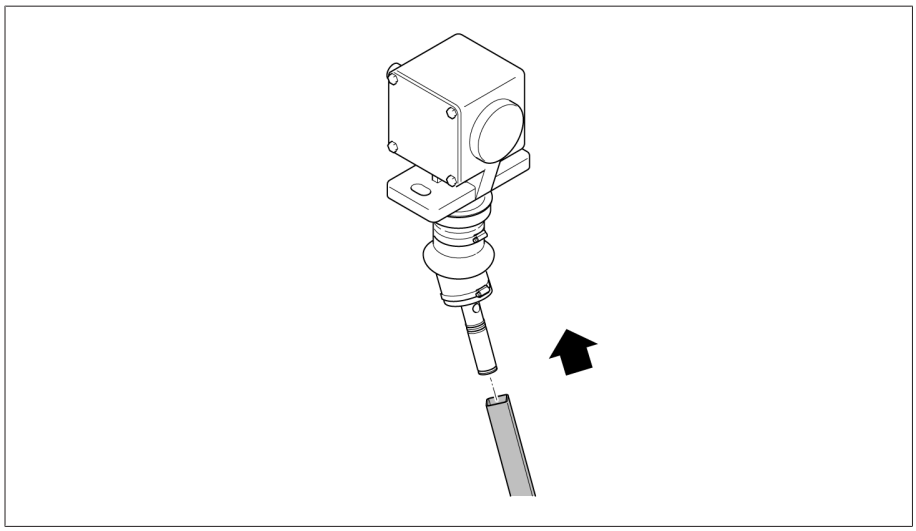

Figure 145: Sliding square tube over upper cardan joint end

12. Thread upper pivotable protective tube with long outlet up onto square tube from below.

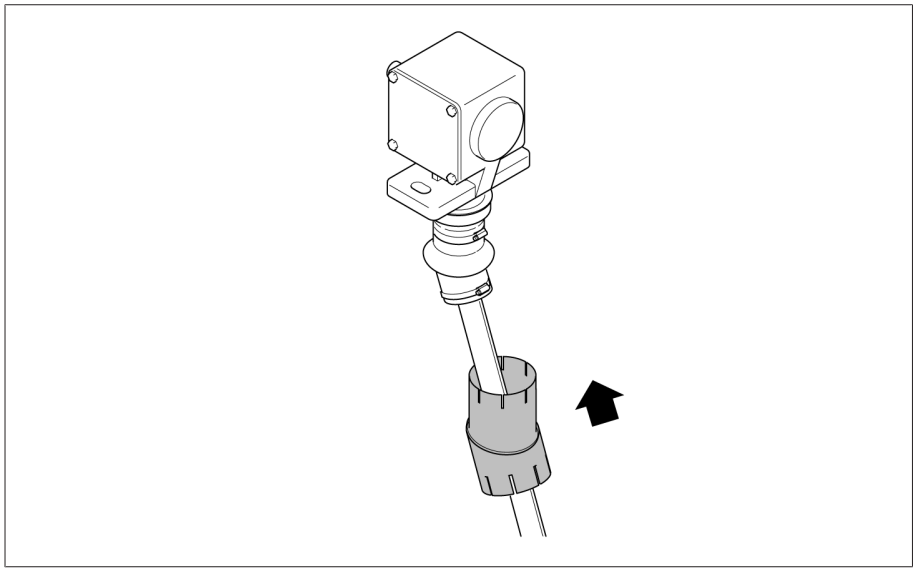

Figure 146: Sliding pivotable protective tube over square tube

13. Slide inner tube into outer tube such that the slotted sides of the outer and inner tube are both facing down. Thread the hose clips.

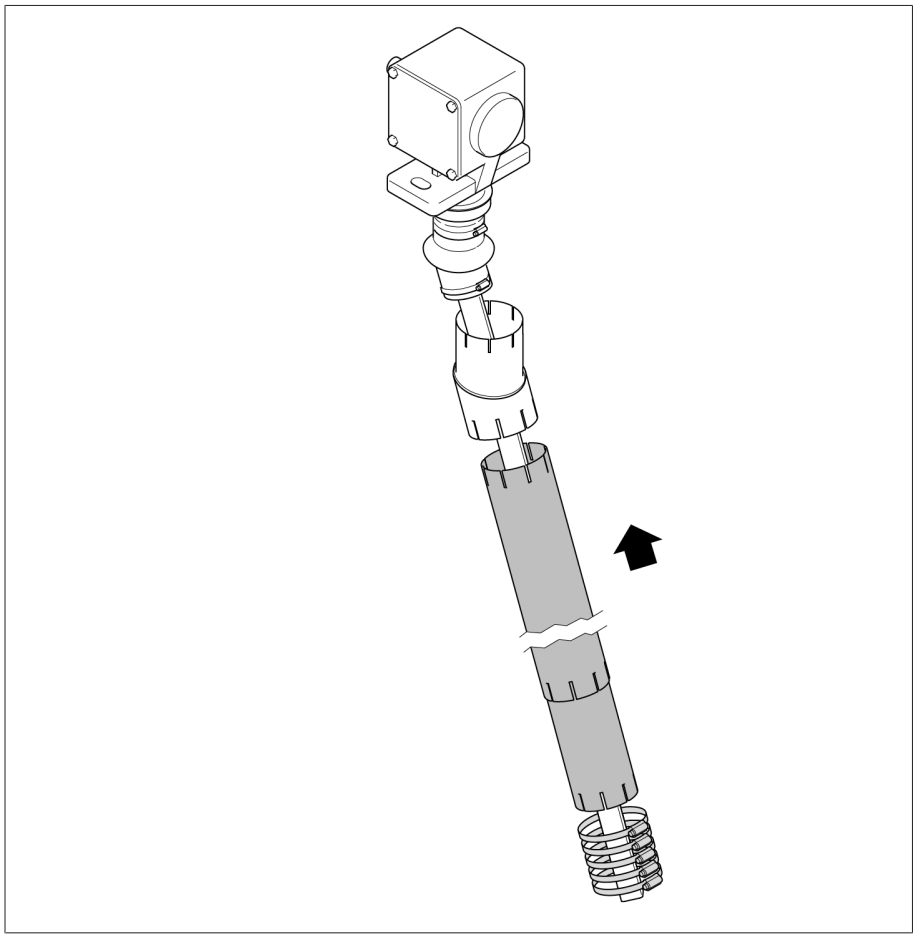

Figure 147: Sliding on telescopic tubes

14. Slide everything up and secure with a screw clamp.

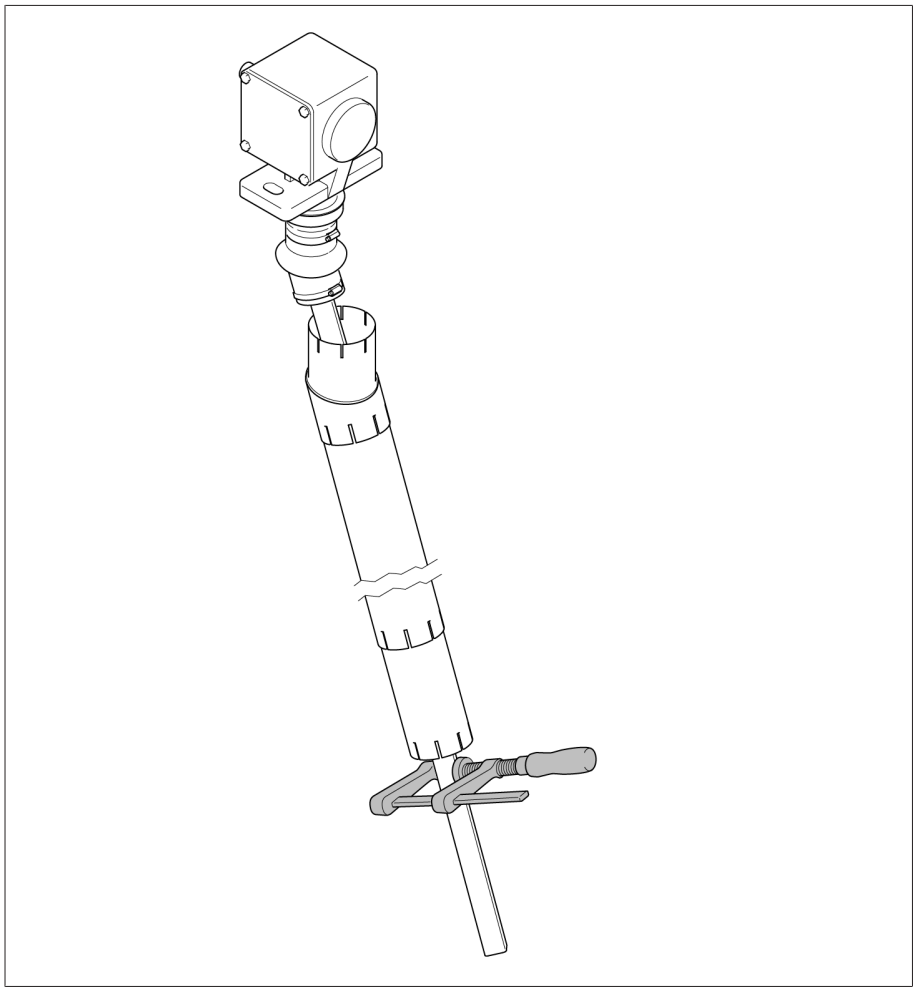

Figure 148: Secure everything with a screw clamp

15. Slide bottom pivotable protective tube (also with long outlet up) on to the square tube and secure with screw clamp.

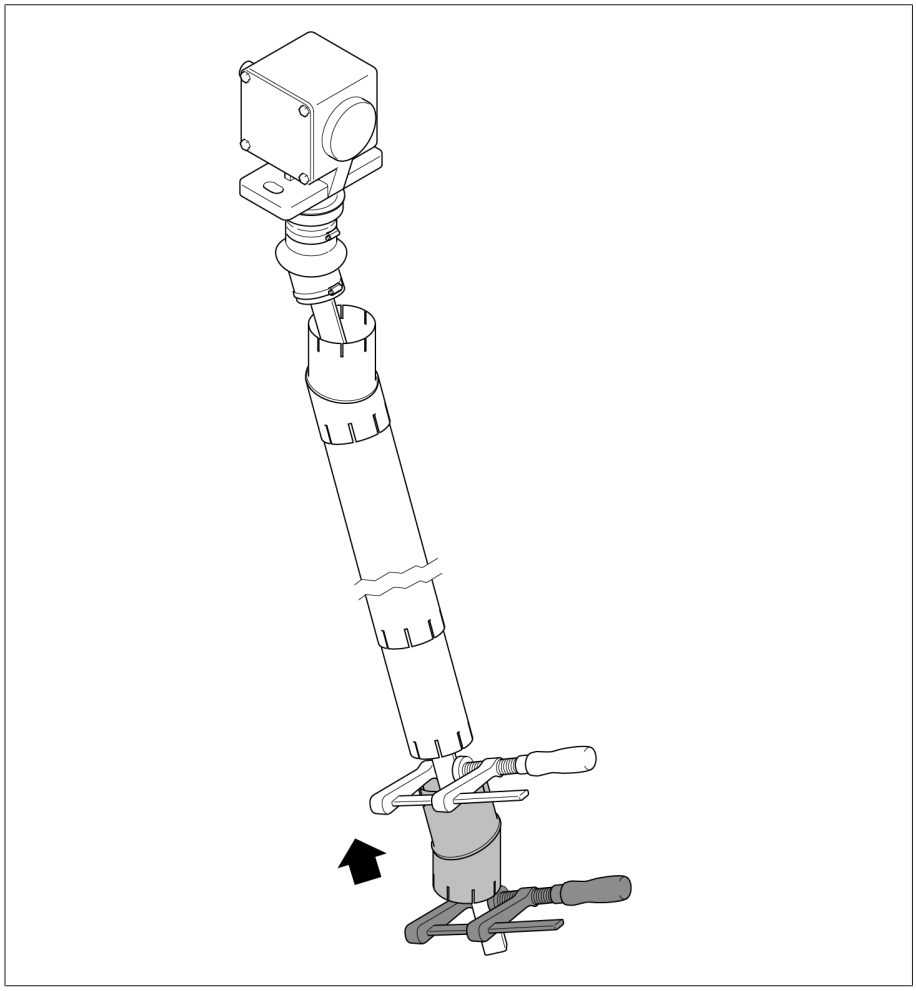

Figure 149: Sliding bottom pivotable protective tube over square tube

16. Swing in square tube and slide all the way down.

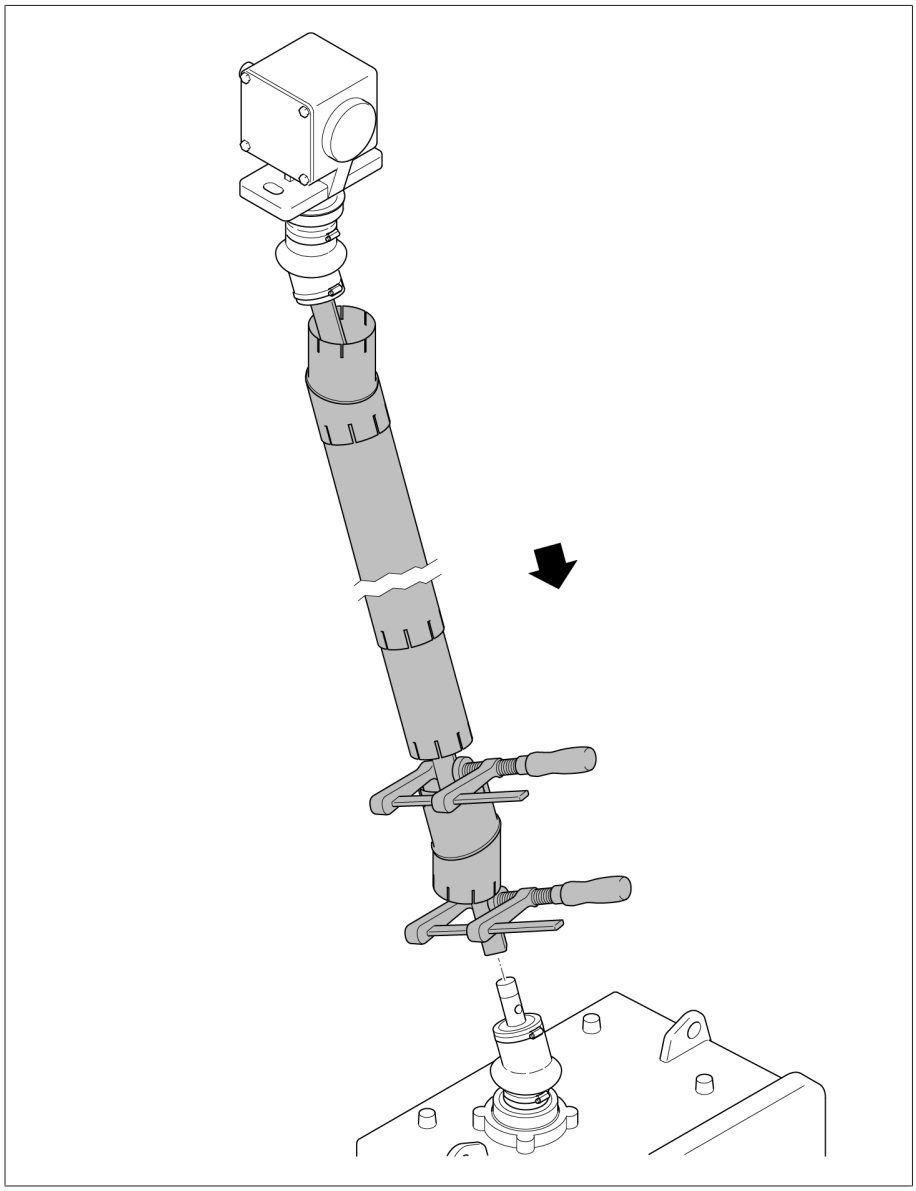

Figure 150: Pivoting square tube back to axis

17. Push the lower coupling bolt in and grease. Tighten lower coupling brackets. Shaft end and coupling part must be securely connected such that no axial clearance remains between the coupling bolt and coupling bracket.

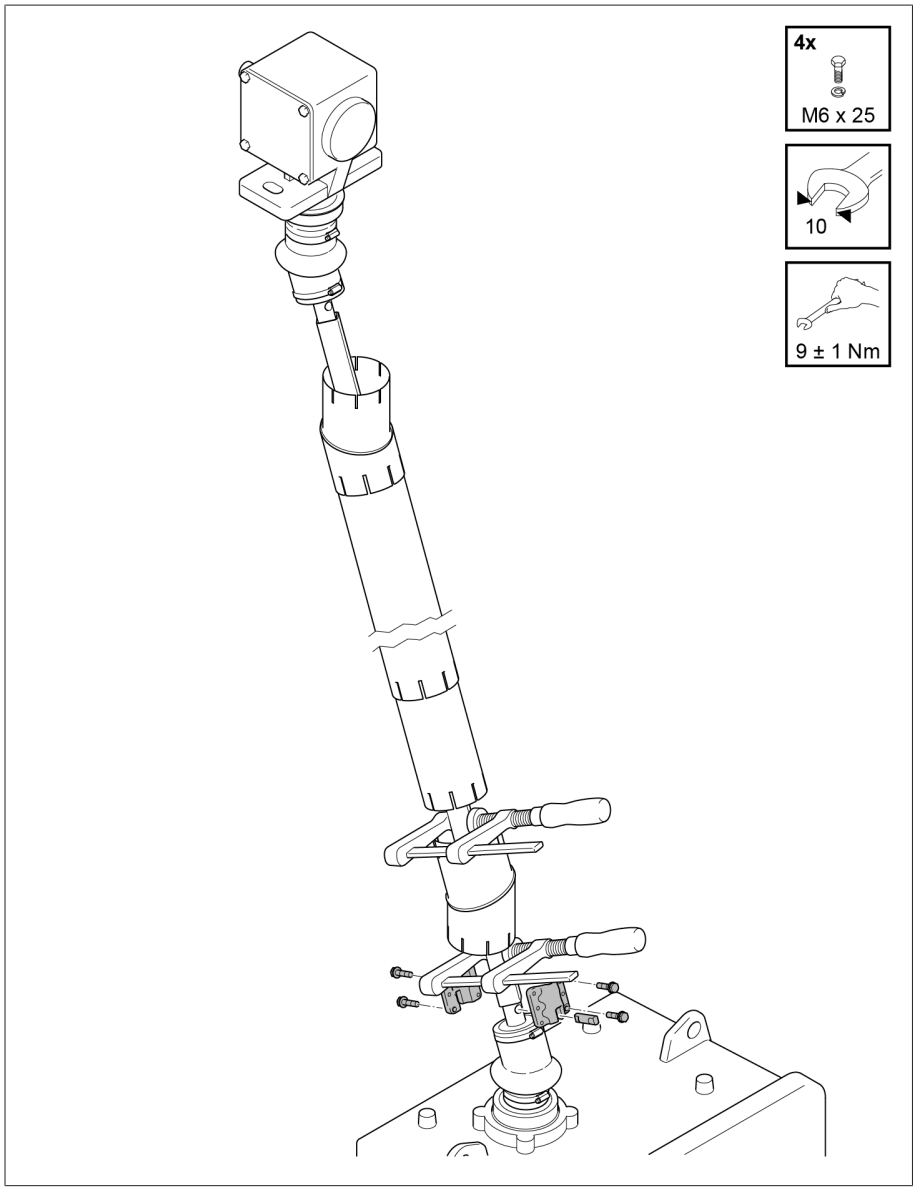


Figure 151: Tightening lower coupling brackets

18. Fit upper coupling brackets with 3 mm axial clearance.

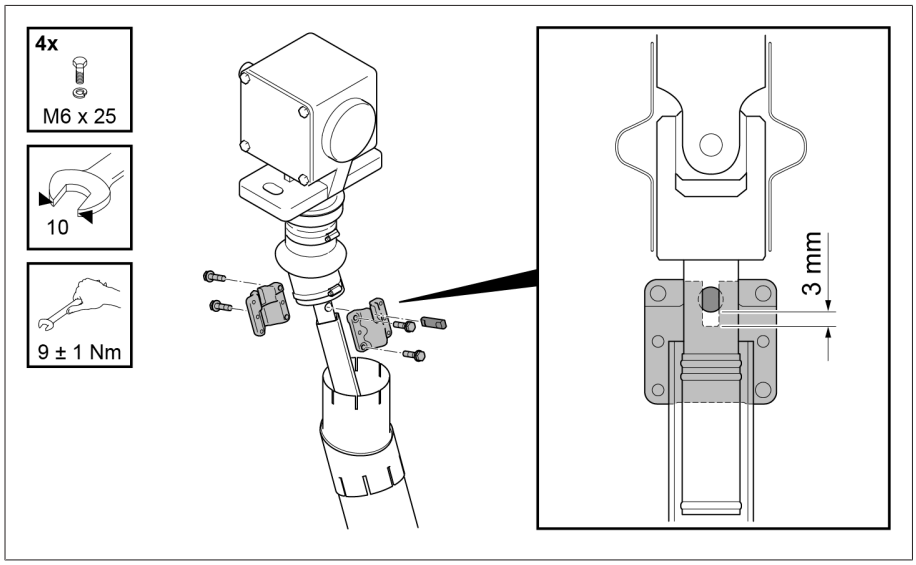


Figure 152: Fitting upper coupling brackets

19. Working from top to bottom, mount the individual parts of the shaft protection. Set angle position between both parts of pivotable protective tube and fix with available hose clip. Secure both upper and lower protective tubes with a hose clip at both ends. Secure the two telescopic protective tubes to one another using a hose clip.

> The plastic adapters must be at the respective end of the pivotable protective tube. Only slide telescopic protective tube into upper and lower pivotable protective tubes by the width of the adapter before tightening the hose clips.

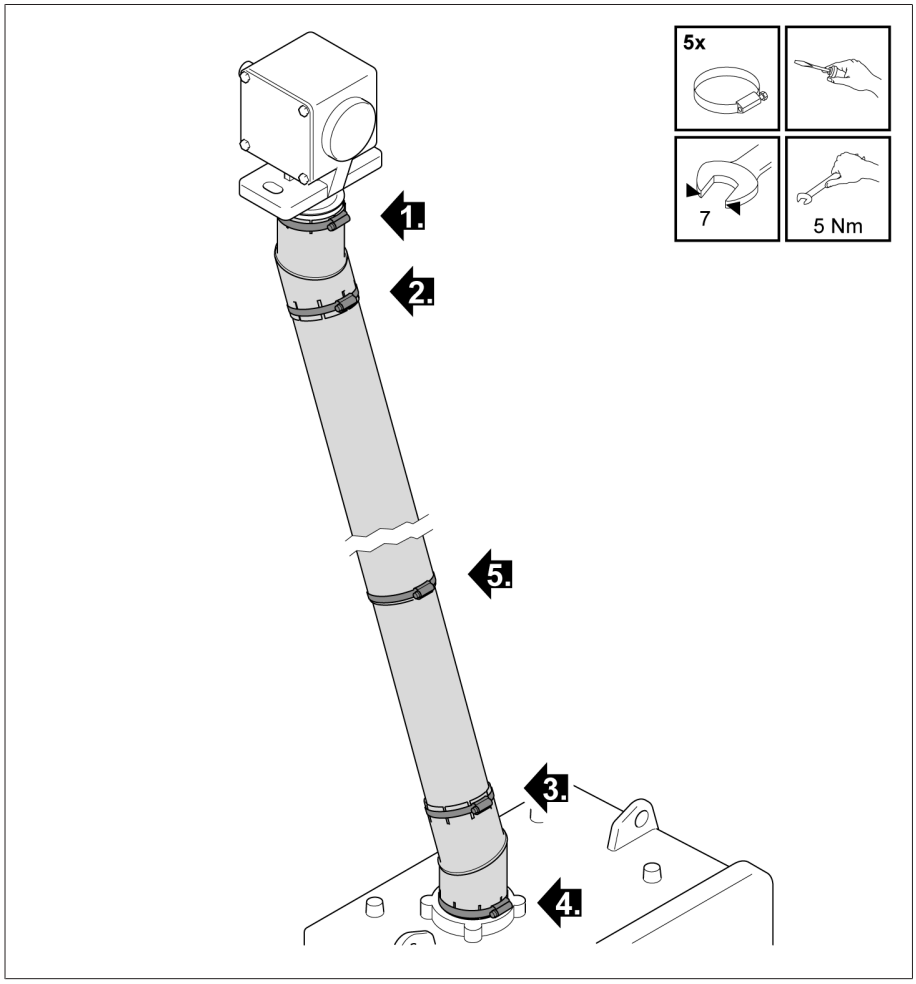


Figure 153: Securing telescopic protective tube and pivotable protective tubes with hose clips

### 5.4.6.4 Fitting drive shaft with insulator

A model with insulator in the vertical drive shaft is available for insulating installation of the drive shaft.

## Permitted axial displacement

Minor axial displacement of the vertical drive shaft with insulator is permitted as long as it does not exceed 35 mm per 1000 mm square tube length (that corresponds to 2°).

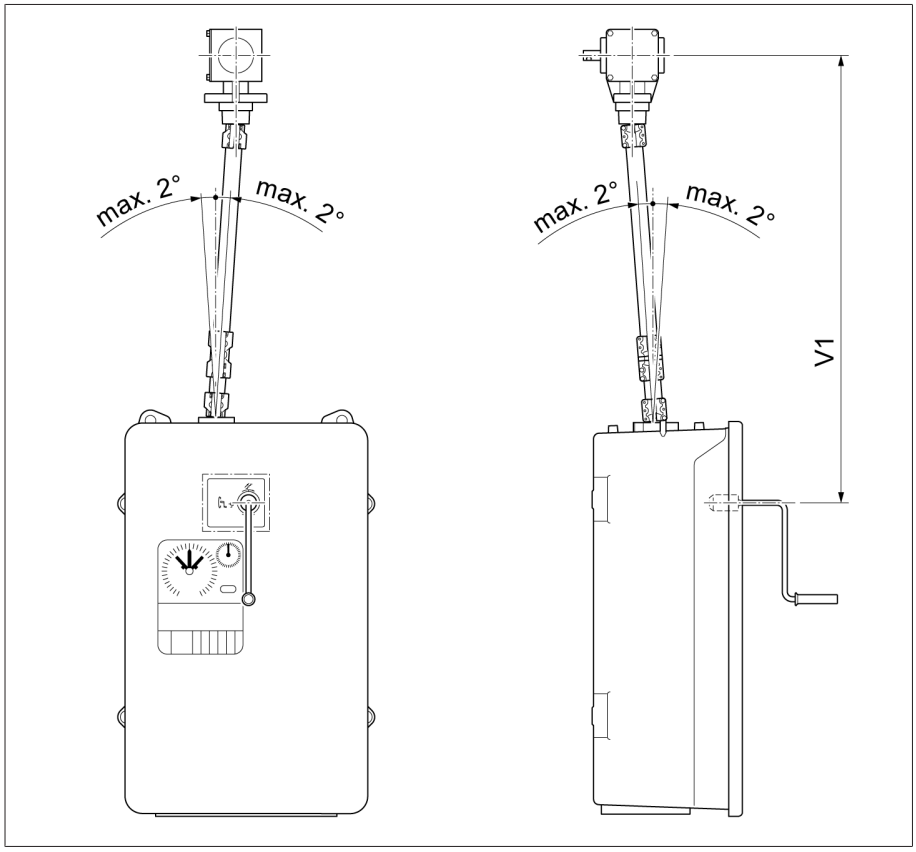


Figure 154: Permitted maximum axial displacement of vertical drive shaft with insulator

### 5.4.6.4.1 Fitting vertical drive shaft with insulator

To fit the vertical drive shaft, proceed as follows.

1. ⚠ CAUTION! Switch off motor protective switch Q1 in the motor-drive unit (position O). If this is not done, the motor-drive unit may be started inadvertently and cause injuries.
2. Screw the bevel gear for mounting on the transformer. Screws are not included in the scope of supply.

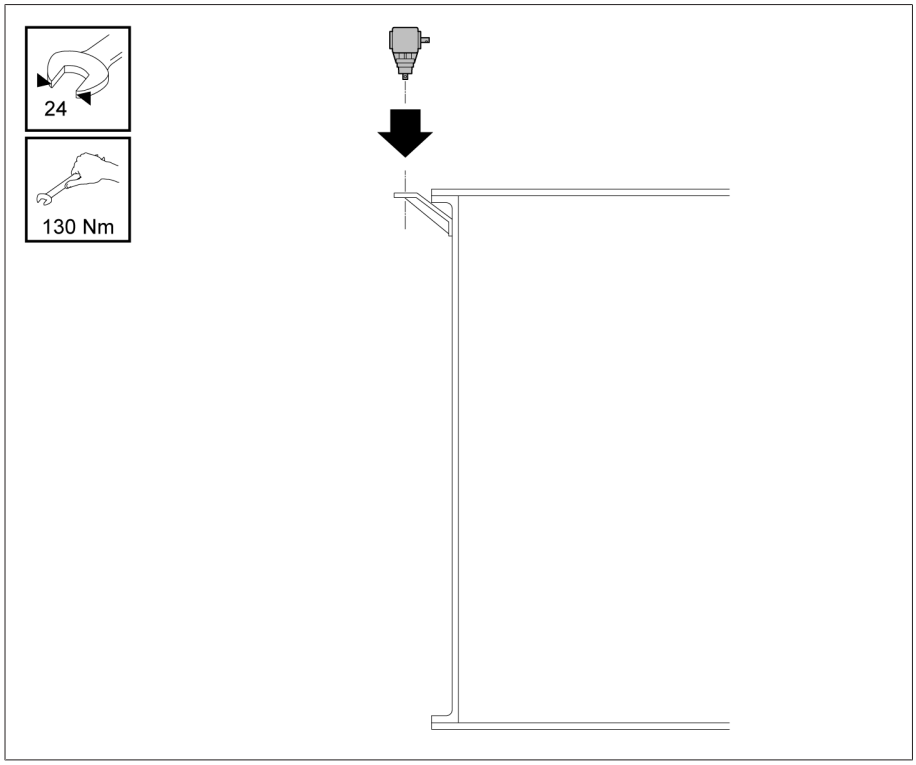


Figure 155: Bevel gear

3. Determine dimension A between shaft end of drive and shaft end of bevel gear. Shorten square tube to length of A–179 mm, taking the insulator into account.

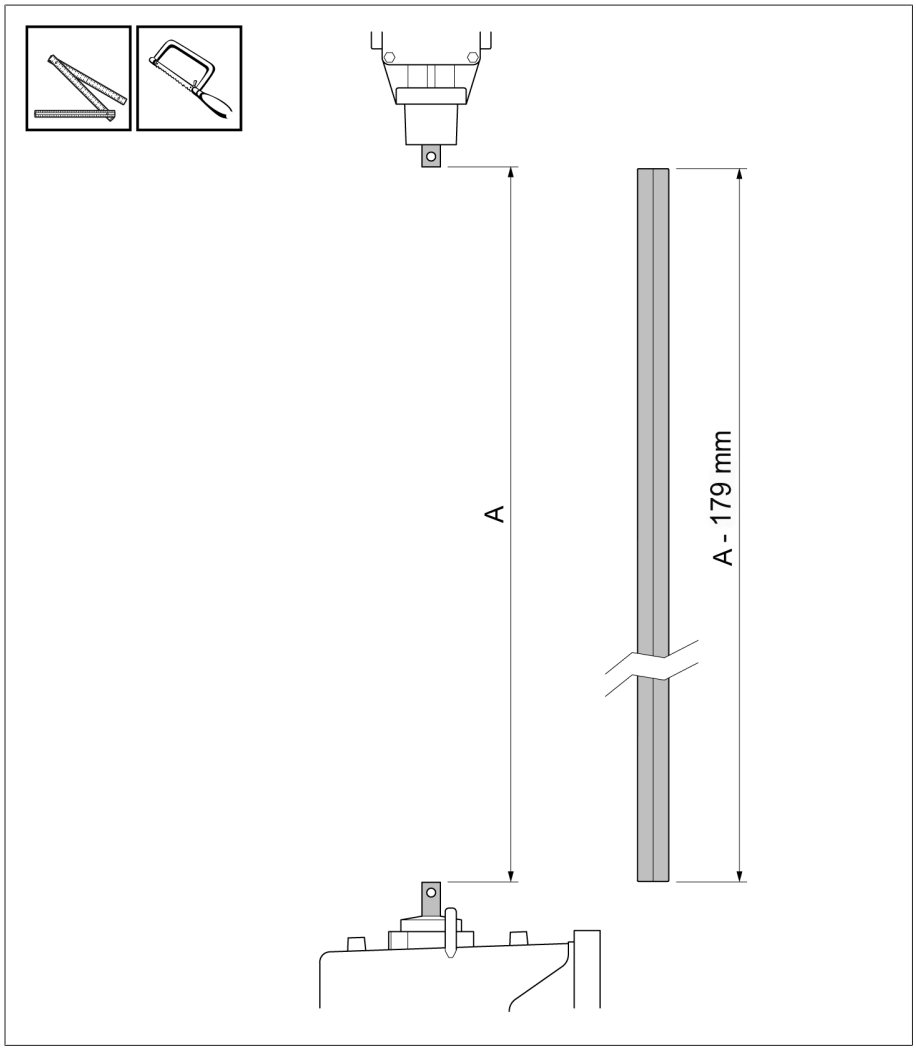


Figure 156: Shortening square tube

4. Deburr cut surfaces of square tube.

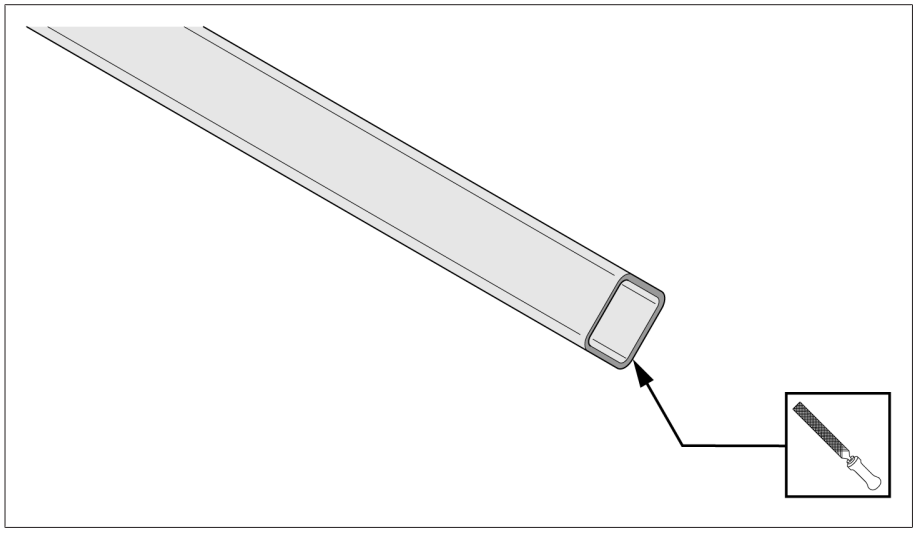

Figure 157: Deburring cut surfaces

5. Screw down double coupling part with insulator supplied and square tube. Mount insulator on the side facing the drive.

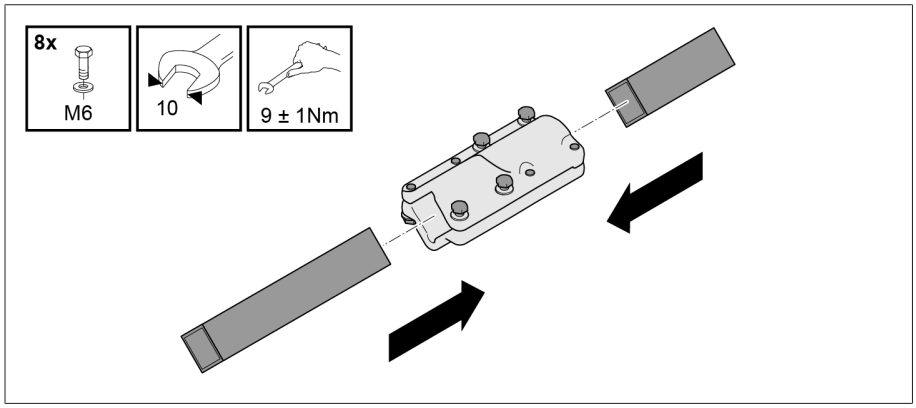


Figure 158: Screwing down square tube and insulator with double coupling part

6. Slide loosely screwed-together coupling part onto insulator until stop is reached.

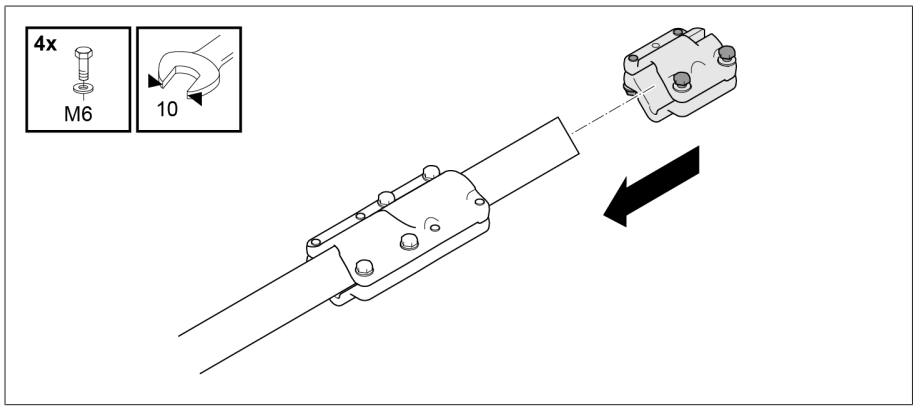


Figure 159: Sliding coupling part onto insulator

7. Place the supplied insulator ring on the bearing collar of the motor-drive unit.

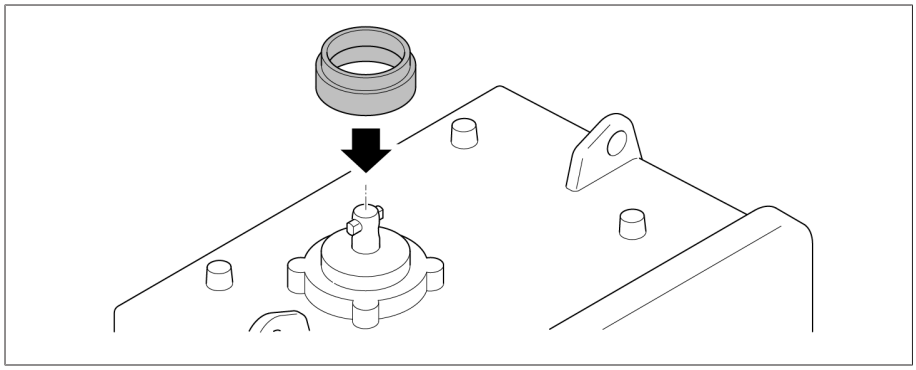

Figure 160: Insulating ring

8. Insert coupling bolt into shaft end of drive. Grease coupling part, coupling bolt and shaft end (e.g. ISOFLEX TOPAS L32). Slide square tube with coupling part onto shaft end.

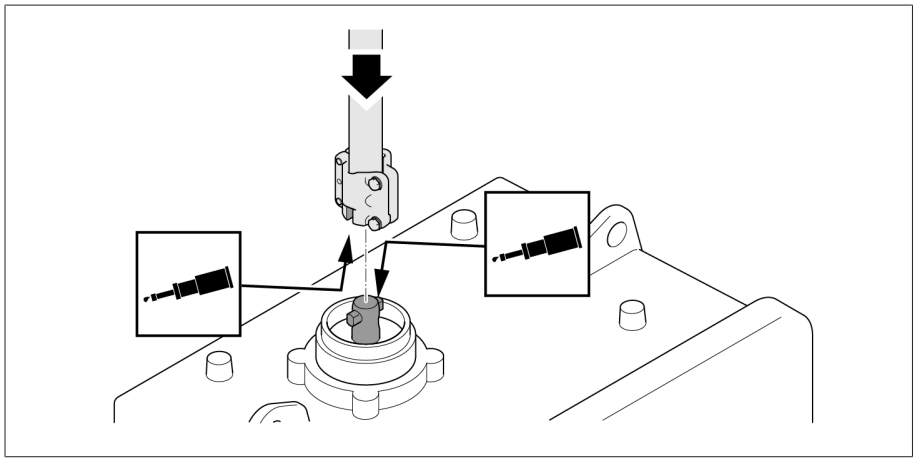

Figure 161: Sliding square tube with coupling part onto shaft end

9. Attach square tube to drive.

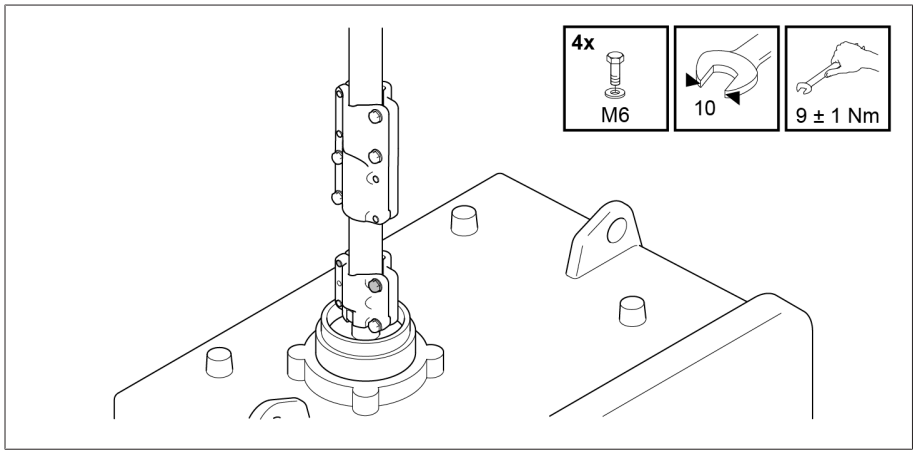


Figure 162: Attaching square tube to drive

10. Pivot square tube away from axis.

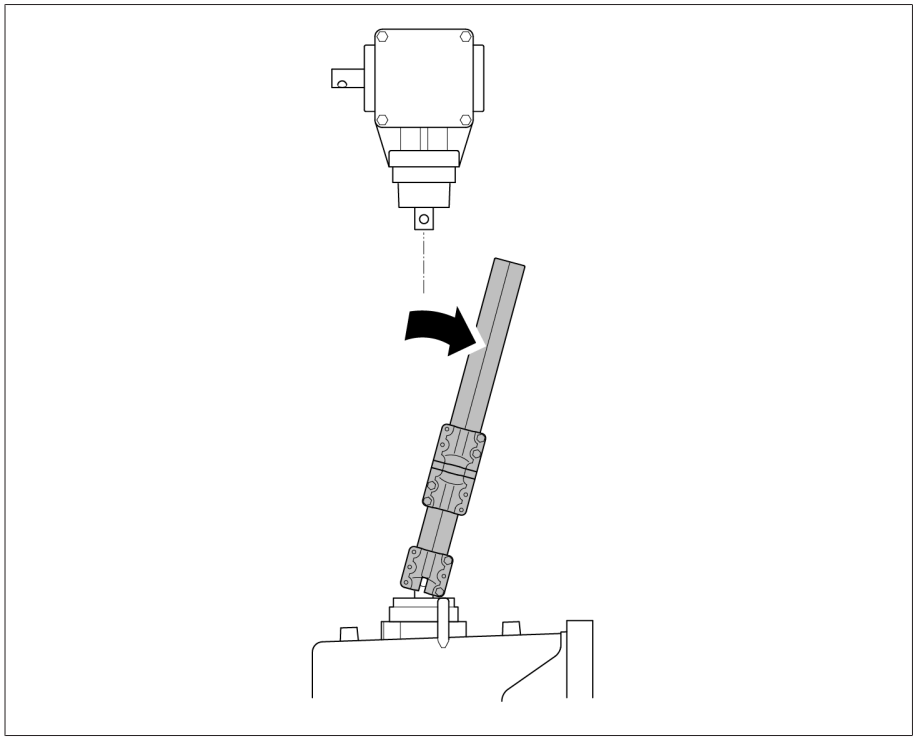

Figure 163: Pivoting square tube away from axis

11. When installing inner tube of telescopic protective tube, shorten on the side without slots if necessary. The minimum dimension for overlapping the two protective tubes is 100 mm.

> Inner tube must not be deformed and must be deburred in order to slide easily in the outer tube.

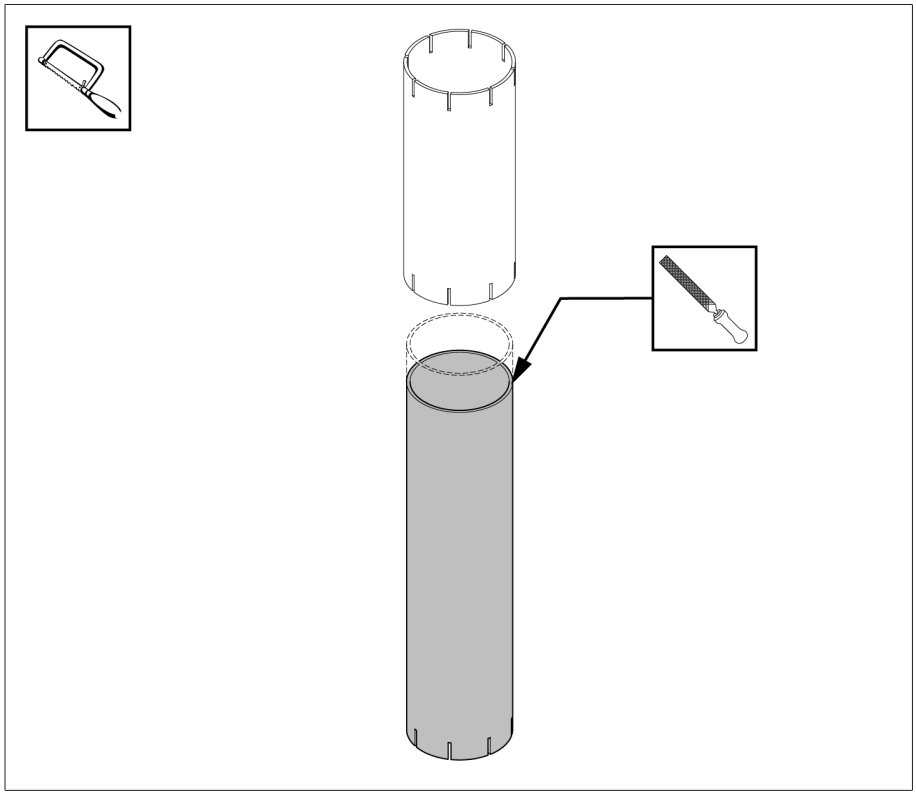

Figure 164: Deburring inner tube

| Dimension A (= distance between shaft end of drive and shaft end of bevel gear) | Inner tube | Outer tube |
|---|---|---|
| 170 mm...190 mm | Shorten to 200 mm | = 200 mm |
| 191 mm...1,130 mm | Dimension A + 20 mm | = 200 mm |
| 1,131 mm...1,598 mm | = 700 mm | = 1,150 mm |
| 1,599 mm...2,009 mm | = 1,150 mm | = 1,150 mm |

12. Slide outer tube over inner tube. When doing so, make sure that the non-slotted side of the inner tube is facing upwards. Slide telescopic protective tube onto square tube. Then slide hose clips over telescopic protective tube.

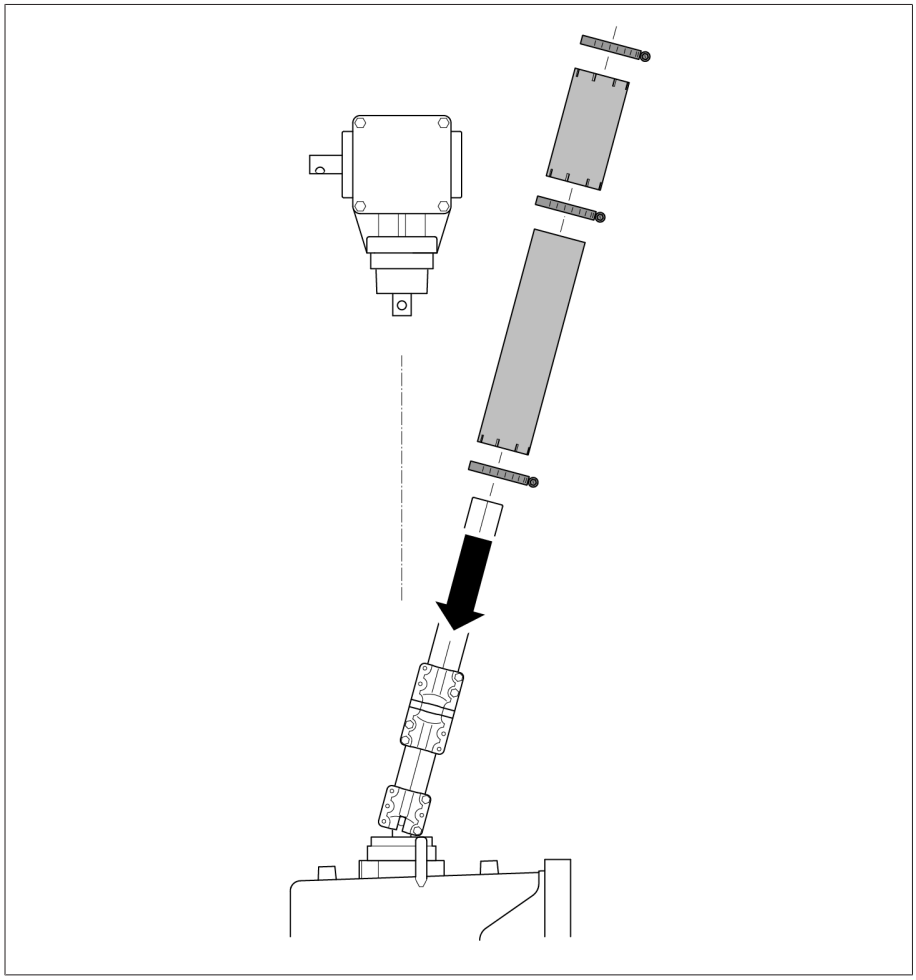

Figure 165: Sliding on telescopic protective tube

13. Place adapter ring over bearing collar of bevel gear and slide upwards. Insert coupling bolt into shaft end of bevel gear. Pivot square tube back to axis.

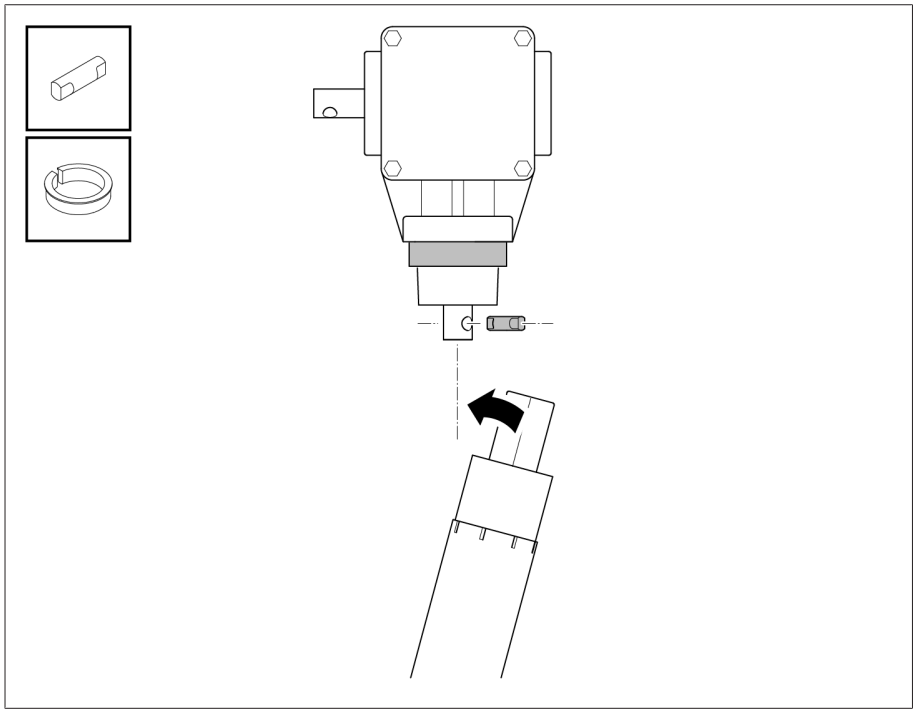

Figure 166: Fitting adapter ring and coupling bolt

14. Grease coupling brackets, coupling bolt and shaft end (e.g. ISOFLEX TOPAS L32) and secure square tube with coupling brackets on the bevel gear. Set a unilateral axial clearance of 3 mm between the coupling bolt and upper coupling piece.

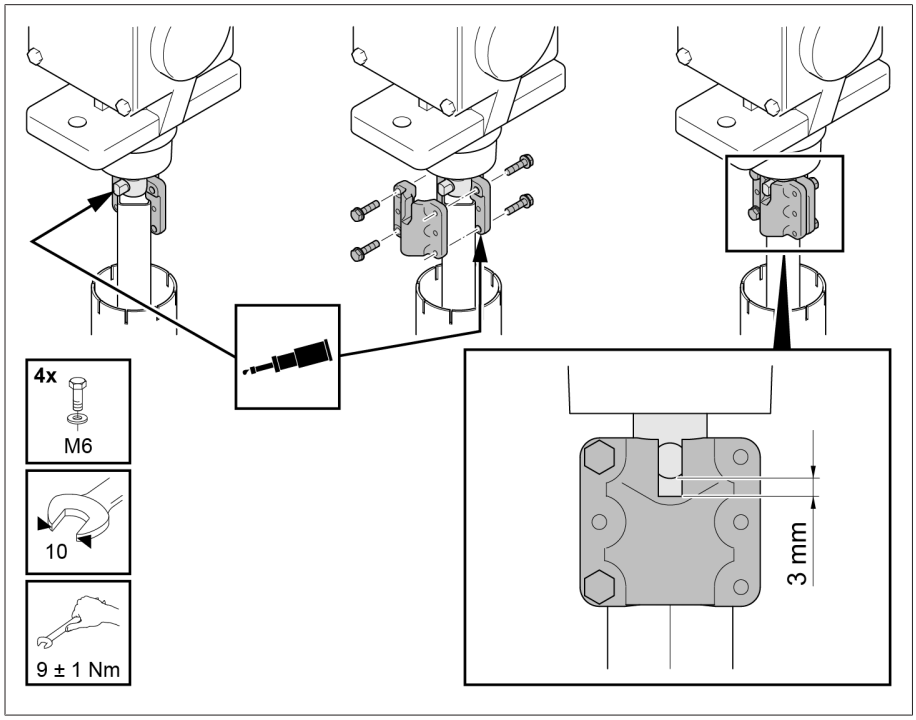


Figure 167: Mounting coupling brackets

15 Attach bottom protective tube (inner tube) with a hose clip to bearing collar
· of drive **1**. Then slide upper protective tube (outer tube) over adapter on bevel gear **2**. Secure upper protective tube to bottom protective tube with hose clip both at top end and at the connection point **3**.

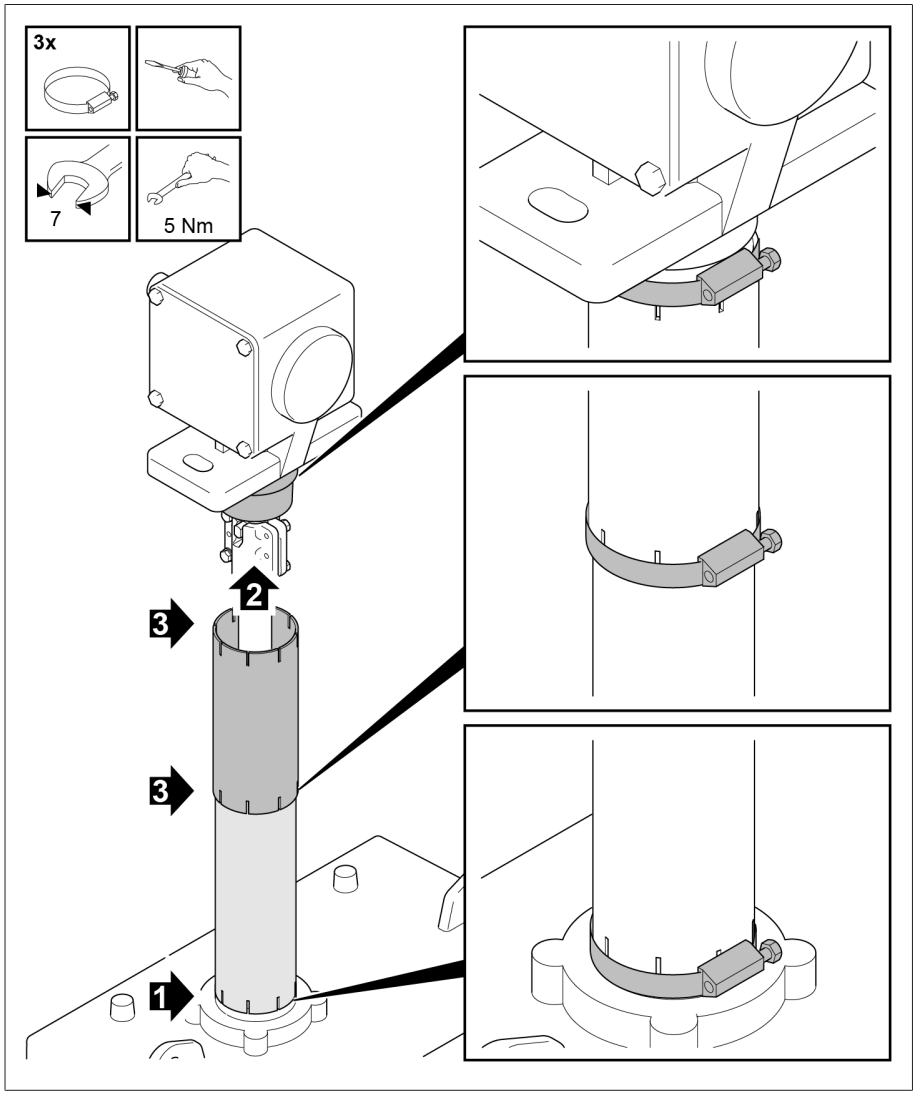

Figure 168: Mounting protective tube

### 5.4.6.5 Fitting drive shaft with insulator and cardan joint

A model with insulator and cardan joint in the vertical drive shaft is also available for insulating installation of the drive shaft.

### Permitted axial displacement

An axial displacement of 20° is permitted for a drive shaft with insulator and cardan joint.

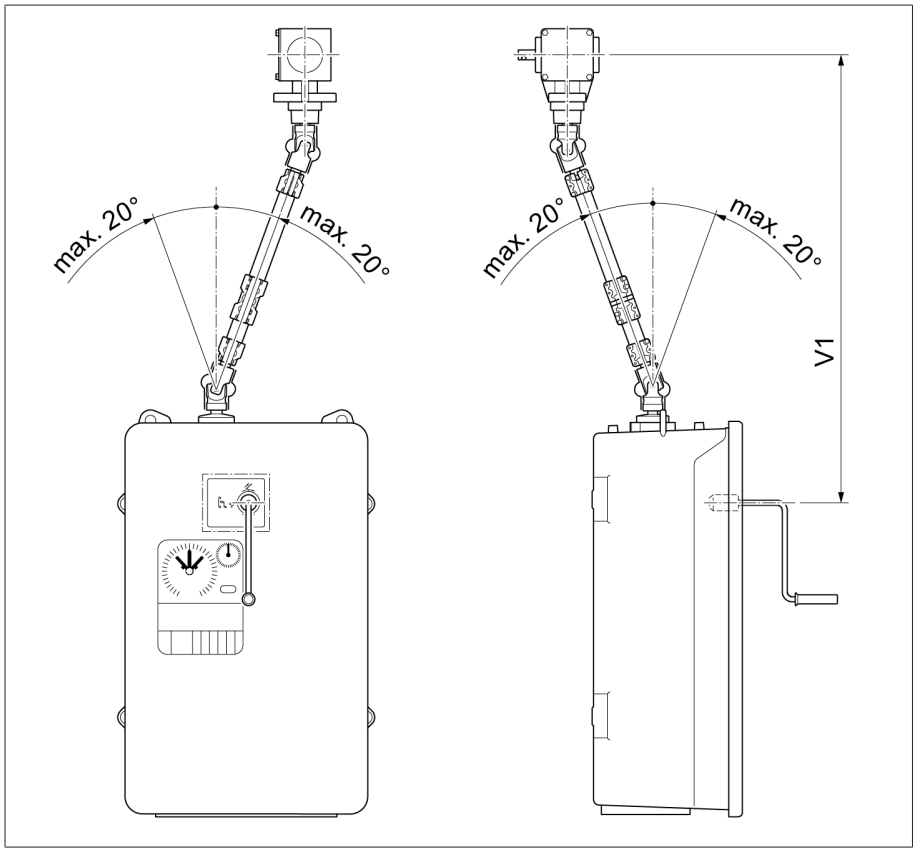


Figure 169: Permitted maximum axial displacement of vertical drive shaft with insulator and cardan joint

## 5.4.7 Centering on-load tap-changer and motor-drive unit

> Center on-load tap-changer and motor-drive unit as described in relevant MR operating instructions for motor-drive unit.

## 5.4.8 Making the electrical connections for the motor-drive unit

> Make electrical connections for the motor-drive unit as described in relevant MR operating instructions for the motor-drive unit.

# 6 Commissioning

**⚠ WARNING**

**Danger of explosion!**

Explosive gases in the oil compartment of the on-load tap-changer, transformer, pipework system, oil conservator and at the dehydrating breather opening can deflagrate or explode and result in severe injury or death!

- Ensure that there are no ignition sources such as naked flame, hot surfaces or sparks (e.g. caused by the build-up of static charge) in the transformer's immediate surroundings during commissioning and that none occur.
- Do not operate any electrical devices (e.g. risk of sparks from impact wrench).
- Only use conductive and grounded hoses, pipes, and pump equipment that are approved for flammable liquids.

**⚠ WARNING**

**Danger of explosion!**

Overloading the on-load tap-changer can lead to explosion. Spraying hot insulating fluid and flying parts can lead to death and serious injuries. Property damage is highly probable.

- Ensure that the on-load tap-changer is not overloaded.
- Ensure use of the on-load tap-changer in accordance with section "Appropriate use".
- Prevent operations outside of the permitted operating conditions by taking suitable measures.

## 6.1 Commissioning the on-load tap-changer at the transformer manufacturer's site

Perform the following work and functional checks before commissioning the transformer.

### 6.1.1 Bleeding on-load tap-changer head and suction pipe

#### 6.1.1.1 Bleeding on-load tap-changer head

1. Open all forward and return valves in the pipe system.
2. Remove screw cap on air-vent valve E1 on the on-load tap-changer head cover.

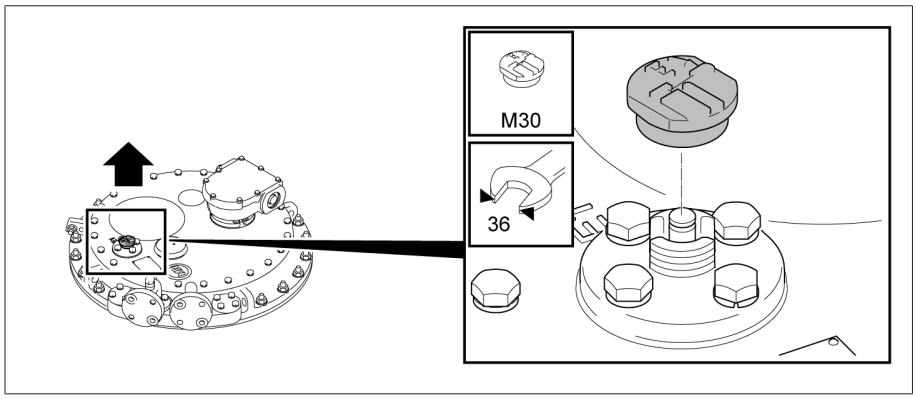


Figure 170: Air-vent valve E1

3. Use screwdriver to lift valve tappet on air-vent valve E1 and bleed on-load tap-changer head.

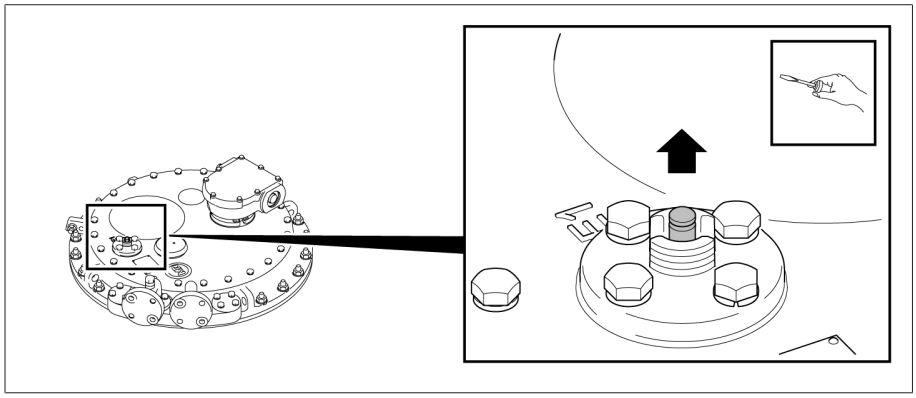

Figure 171: Valve tappet

4. Seal air-vent valve E1 with screw cap (tightening torque 10 Nm).

### 6.1.1.2 Bleeding suction pipe on pipe connection S

1. Remove screw cap from pipe connection S.

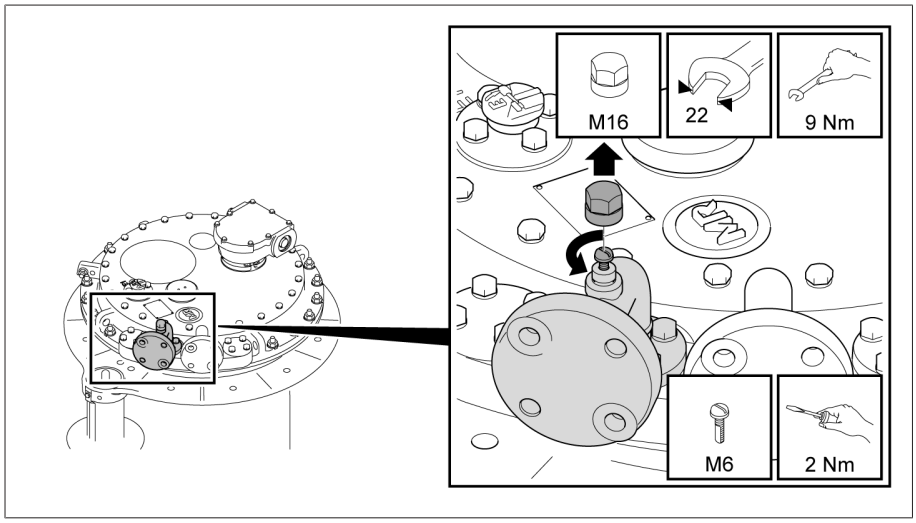


Figure 172: Pipe connection S

2. Open vent screw and bleed piping.
3. Close vent screw.
4. Seal vent screw with screw cap.

## 6.1.2 Grounding the on-load tap-changer

1. Connect grounding screw on the on-load tap-changer head to transformer cover. It is essential that CUPAL washers be placed directly on the connecting lug on both sides. The aluminum side of the CUPAL washers must be facing the connecting lug.

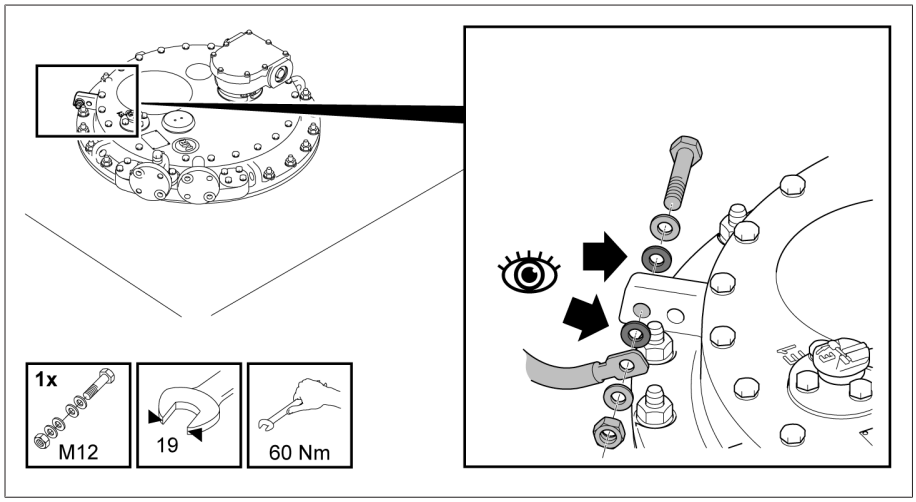


Figure 173: Grounding screw on on-load tap-changer head

2. Connect grounding screw of motor-drive protective housing to transformer tank. It is essential that a CUPAL washer be placed between the cable shoe and connecting lug. The aluminum side of the CUPAL washer must be facing the connecting lug.

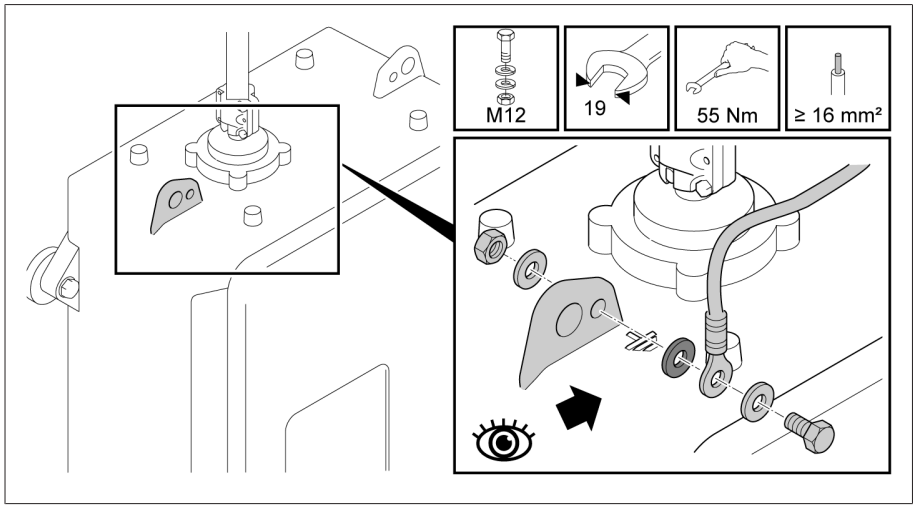


Figure 174: Grounding screw on motor-drive unit

3. When using a temperature sensor, connect housing of temperature sensor with grounding screw on the on-load tap-changer head or another grounding point on the transformer. It is essential that a CUPAL washer be placed between the cable shoe and temperature sensor housing. The aluminum side of the CUPAL washer must be facing the temperature sensor housing.

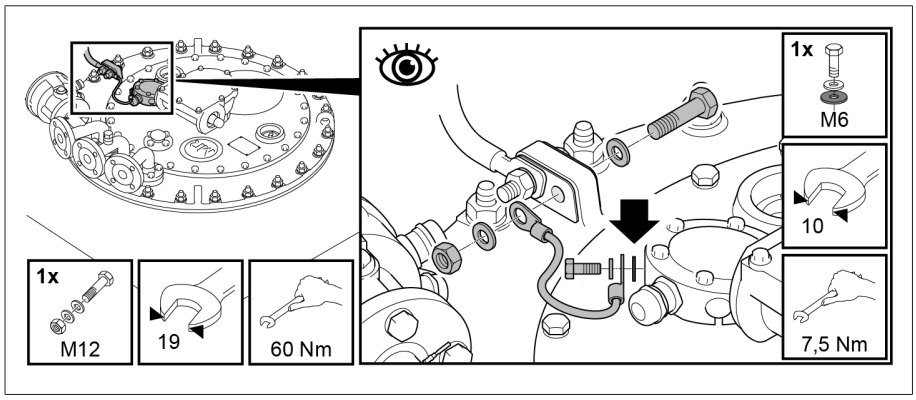


Figure 175: Grounding temperature sensor

## 6.1.3 Checking motor-drive unit

NOTICE

**Damage to the on-load tap-changer / de-energized tap-changer!**

Damage to the on-load tap-changer / de-energized tap-changer due to actuation of the on-load tap-changer / de-energized tap-changer without insulating fluid.

› Ensure that the selector / de-energized tap changer is fully immersed in insulating fluid and that the oil compartment of the on-load tap-changer is completely filled with insulating fluid.

Prior to commissioning the transformer, check whether the motor-drive unit and on-load tap-changer are correctly coupled and that the motor-drive unit functions correctly.

### Tests on the motor-drive unit

1. Perform function checks as described in relevant MR operating instructions for motor-drive unit.
2. NOTICE! An incorrectly coupled motor-drive unit will lead to damage to the on-load tap-changer. Undertake trial tap-change operations across the entire range of settings. Ensure that in each operating position, the tap position indicators of motor-drive unit and on-load tap-changer (inspection window in the on-load tap-changer head) match.

### Dielectric tests on transformer wiring

› Note information relating to dielectric tests on transformer wiring in relevant MR operating instructions for motor-drive unit.

## 6.1.4 High-voltage tests on the transformer

Note the following points before performing high-voltage tests on the transformer:

- Ensure that the oil compartment of the on-load tap-changer is completely filled with insulating fluid.
- Ensure that all protective devices for the on-load tap-changer are functioning correctly and are ready for use.
- Ensure that the ground connections on the motor-drive protective housing and protective housing fastening are free of paint.

- Only perform high voltage test if motor-drive unit door is closed.
- Disconnect external connections to electronic components in the motor-drive unit to prevent damage from overvoltage.
- When connecting the motor-drive unit's supply voltage, only use the cable bushings in the protective housing base intended for lead insertion.
- Guide all ground connecting leads to one central connection point (establishment of suitable reference earth).
- Disconnect all electronic components before the high voltage test. Before a dielectric test of the wiring, remove all devices with a withstand voltage of < 1000 V.
- Remove leads used for testing before the high voltage test as these function as antennas.
- Wherever possible, route the measurement leads and data leads separately to the energy cables.

Contact the manufacturer if you have any questions about possible sources of danger.

## 6.2 Transporting transformer to the operating site

NOTICE

**Damage to motor-drive unit!**

Damage to the motor-drive unit due to condensate in protective housing of motor-drive unit.

- Always keep protective housing of the motor-drive unit tightly closed.
- In the event of downtime lasting more than 8 weeks prior to initial commissioning, connect and operate the heater in the motor-drive unit. If this is not possible, place a sufficient amount of desiccant in the protective housing.

### 6.2.1 Transport with drive removed

1. Ensure that the drive and the on-load tap-changer are in the adjustment position.
2. Remove the drive.
3. Do not actuate the drive while the on-load tap-changer is uncoupled and do not turn the output shaft.
4. Do not actuate an on-load tap-changer which is uncoupled and do not turn its drive shaft.
5. Transport the drive to the installation site in the MR delivery packaging.
6. Fit the drive [▶Section 5.4.5, Page 85] and the drive shaft [▶Section 5.4.6, Page 85] to the transformer at the installation site.

### 6.2.2 Transport with full transformer tank and without oil conservator

Attach a connecting lead between the on-load tap-changer's oil compartment and the transformer tank if the transformer has been transported with a full tank and without an oil conservator.

- Establish the connecting lead on the on-load tap-changer head between connections E2 and one of the free pipe connections R, S or Q.

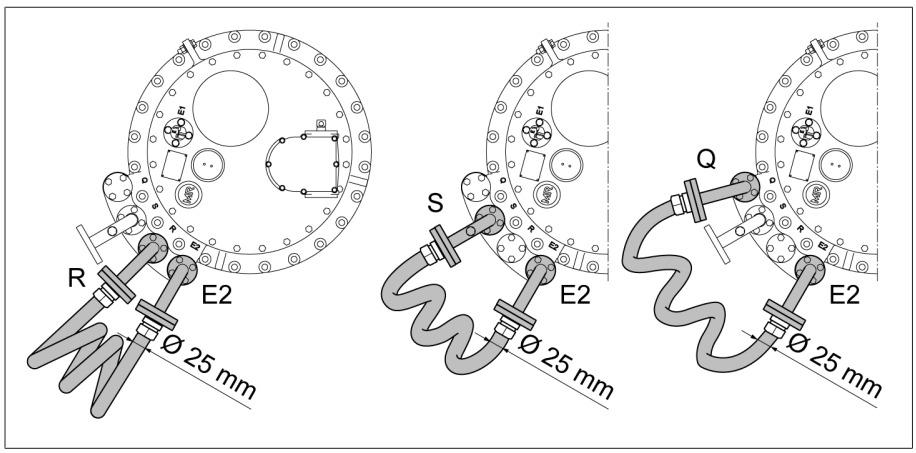


Figure 176: Connecting lead

> In the event of a short-term immobilization time (maximum of 4 weeks) without an oil conservator, it is also sufficient to remove approximately 7 liters of insulating fluid from the on-load tap-changer oil compartment.

### 6.2.3 Transport with empty transformer tank

NOTICE

**Damage to the on-load tap-changer!**

The on-load tap-changer may be subject to oscillating movements during transformer transportation if the transformer is transported without insulating fluid and the on-load tap-changer oil compartment is transported with insulating fluid. These oscillating movements can lead to damage to the on-load tap-changer.

- Completely empty the oil compartment if the transformer is to be transported without insulating fluid.
- Preserve the oil compartment in the same way as the transformer (for example by filling with N2).

#### 6.2.3.1 Emptying oil compartment via pipe connection S

1. De-energize all auxiliary circuits (e.g tap-change supervisory device, pressure relief device, pressure monitoring device).
2. With the stop-cock (slide valve) between oil conservator and oil compartment open, open air-vent valve E1 on the on-load tap-changer head.
3. Discharge the gas from under the on-load tap-changer cover. Ensure sufficient fresh air (e.g. in transformer cells and work tents) when doing so.
4. Once the gas has been discharged and the insulating fluid is flowing out of the air-vent valve, close the air-vent valve and close the stop-cock between the oil conservator and oil compartment.
5. Open air-vent valve again and drain off approximately 5–10 liters of insulating fluid via the pipe connection S until the area under the on-load tap-changer head cover is free of insulating fluid.
6. Loosen 24 screws M10 / wrench size 17 with locking elements on the on-load tap-changer head cover.
7. Remove on-load tap-changer head cover.
8. Extract insulating fluid via pipe connection S.
9. Open stop-cock between oil conservator and oil compartment.
   - » Insulating fluid flows out of the oil conservator into the oil compartment.
10. Extract insulating fluid via pipe connection S.
11. Place on-load tap-changer head cover on the on-load tap-changer head.
12. Screw down on-load tap-changer head cover using 24 screws M10 / wrench size 17 and locking elements (tightening torque 34 Nm).

#### 6.2.3.2 Emptying oil compartment without oil suction pipe

⚠ WARNING

**Danger of explosion!**

Explosive gases under the on-load tap-changer head cover can deflagrate or explode and result in severe injury or death.

- Ensure that there are no ignition sources such as open flames, hot surfaces or sparks (e.g. caused by the build-up of static charge) in the immediate surroundings and that none occur.
- De-energize all auxiliary circuits (for example tap-change supervisory device, pressure relief device, pressure monitoring device) before removing the on-load tap-changer head cover.
- Do not operate any electrical devices during the work (e.g. risk of sparks from impact wrench).

1. De-energize all auxiliary circuits (for example the tap-change supervisory control, pressure relief device, pressure-operated relays).
2. If the stop-cock (slide valve) between the oil conservator and oil compartment is open, open the air-vent valve E1 on the on-load tap-changer head.

3. Drain off the gas from under the on-load tap-changer cover. Ensure sufficient fresh air (for example in transformer cells and work tents).
4. Once the gas has been drained off and the oil is flowing out of the air-vent valve, close this valve and close the stop-cock between the oil conservator and oil compartment.
5. Open air-vent valve again and drain off around 5–10 liters of oil via the drain pipe until the area under the on-load tap-changer head cover is free of oil.
6. Loosen 24 screws M10/wrench size 17 with locking washers on on-load tap-changer head cover.
7. Remove the on-load tap-changer head cover.
8. Carefully slide oil-resistant plastic pipe (outer diameter maximum 30 mm, minimum length = height of on-load tap-changer + 50 mm) past gearbox plate between diverter switch and oil compartment to base of on-load tap-changer, see appendix.
9. Extract oil.
10. Open stop-cock between oil conservator and oil compartment.

    ⇨ The oil from the oil conservator flows into the oil compartment.
11. Extract oil.
12. Place the on-load tap-changer head cover on the on-load tap-changer head.
13. Use 24 screws M10/wrench 17 to screw down on-load tap-changer head cover (tightening torque 34 Nm).

# 6.3 Commissioning transformer at operating site

## 6.3.1 Filling the oil compartment of the on-load tap-changer with insulating fluid

NOTICE

**Damage to the on-load tap-changer!**

Unsuitable insulating fluids cause damage to the on-load tap-changer.

› Only use insulating fluids [▶Section 8.1.2, Page 154] approved by the manufacturer.

1. NOTICE! Check whether the on-load tap-changer head cover has a flange for attaching a pressure relief device. If it does, operation without a pressure relief device is not permitted and may result in damage to the on-load tap-changer.
   » Fit a pressure relief device which is approved for this on-load tap-changer on the on-load tap-changer head.
2. Establish a connecting lead between pipe connection E2 and one of the pipe connections R, S or Q to ensure equal pressure in the oil compartment and transformer during evacuation.

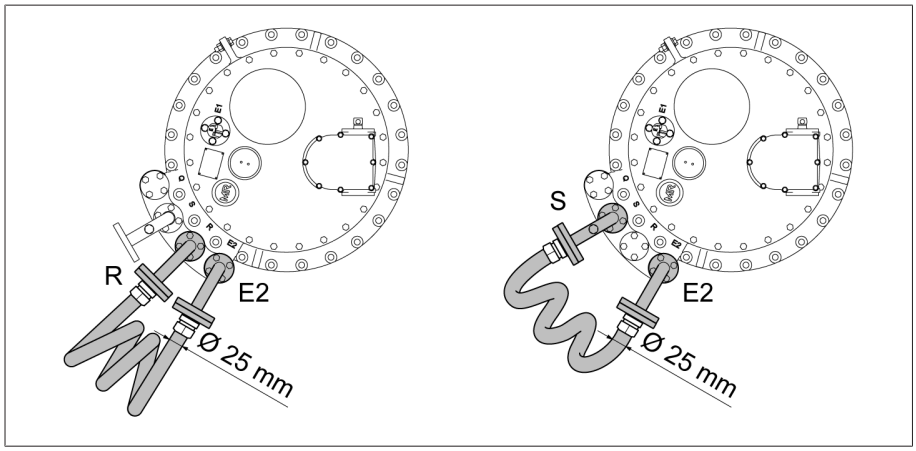


Figure 177: Connecting lead

3. Fill on-load tap-changer with new insulating fluid using one of the two free pipe connections of the on-load tap-changer head.

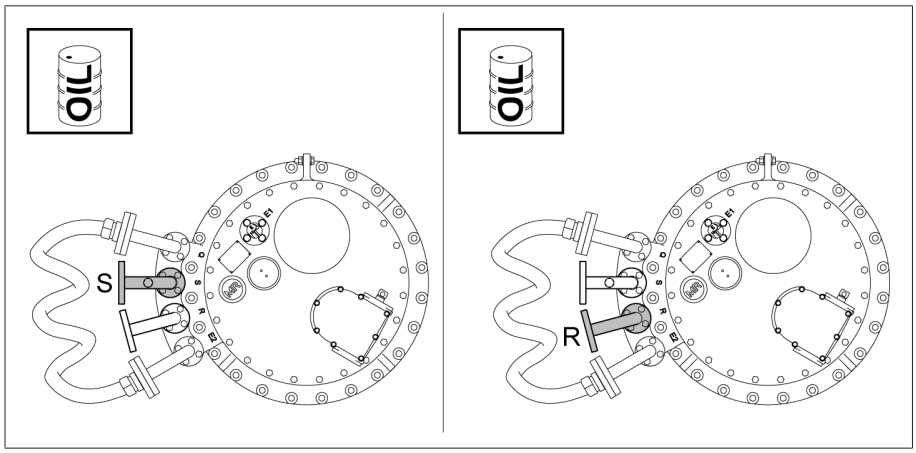


Figure 178: Pipe connections S and R

4. Take an insulating fluid sample from the oil compartment.
5. Record the temperature of the sample immediately after the sample is taken.
6. Determine dielectric strength and water content at a sample temperature of 20 °C ± 5 °C. The dielectric strength and water content must comply with the limit values specified in the technical data.

## 6.3.2 Bleeding on-load tap-changer head and suction pipe

### 6.3.2.1 Bleeding on-load tap-changer head

1. Open all forward and return valves in the pipe system.
2. Remove screw cap on air-vent valve E1 on the on-load tap-changer head cover.

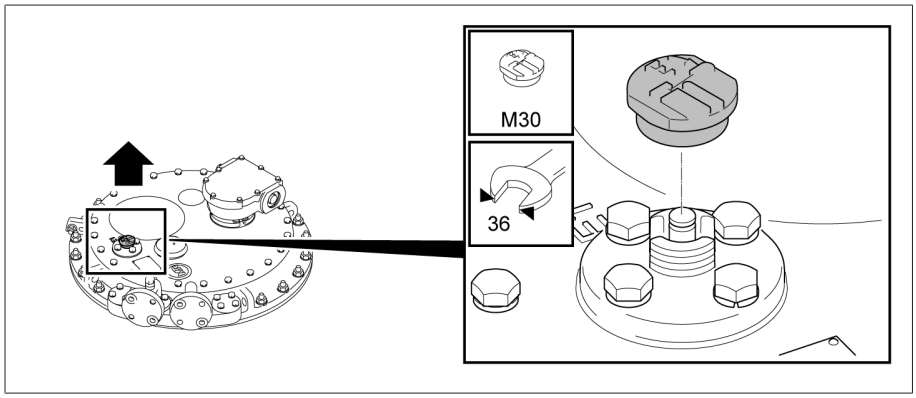


Figure 179: Air-vent valve E1

3. Use screwdriver to lift valve tappet on air-vent valve E1 and bleed on-load tap-changer head.

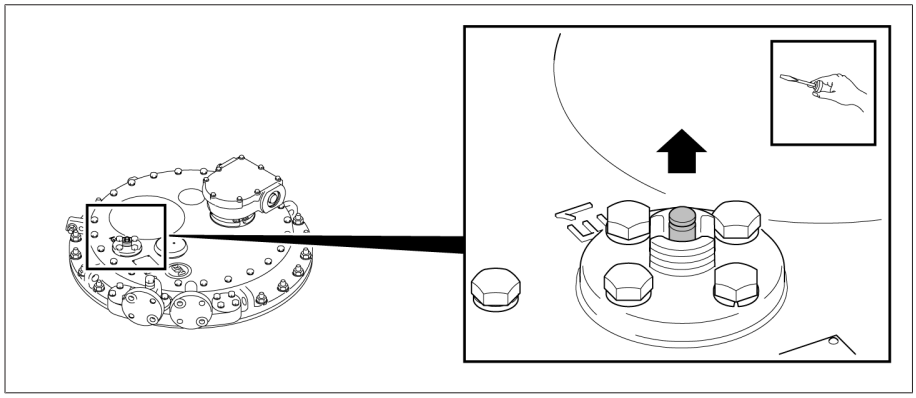

Figure 180: Valve tappet

4. Seal air-vent valve E1 with screw cap (tightening torque 10 Nm).

### 6.3.2.2 Bleeding suction pipe on pipe connection S

1. Remove screw cap from pipe connection S.

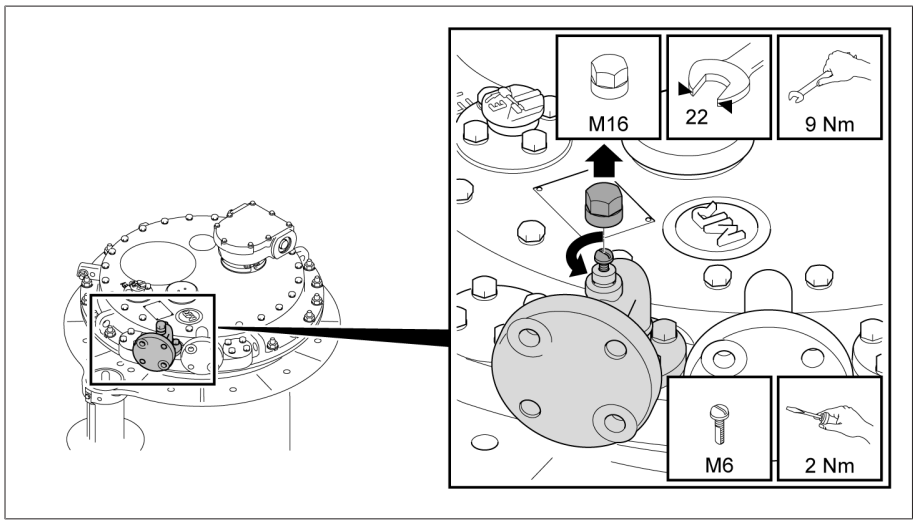


Figure 181: Pipe connection S

2. Open vent screw and bleed piping.
3. Close vent screw.

4. Seal vent screw with screw cap.

### 6.3.3 Checking motor-drive unit

NOTICE

**Damage to the on-load tap-changer / de-energized tap-changer!**

Damage to the on-load tap-changer / de-energized tap-changer due to actuation of the on-load tap-changer / de-energized tap-changer without insulating fluid.

- Ensure that the selector / de-energized tap changer is fully immersed in insulating fluid and that the oil compartment of the on-load tap-changer is completely filled with insulating fluid.

NOTICE

**Damage to the on-load tap-changer and motor-drive unit!**

Damage to on-load tap-changer and motor-drive unit due to incorrect use of position transmitter equipment.

- Only circuits stated in the chapter Technical data for position transmitter equipment may be connected to the position transmitter module connections.
- The switchover point of the position transmitter equipment in the motor-drive unit is not the same as the switchover point of the diverter switch operation. This depends on the type of diverter switch. This fact should be noted when project planning the locking circuits between the motor-drive unit and external equipment (e.g. transformer circuit breaker).
- Therefore, the "Tap changer in operation" position transit contact shown in the connection diagram should be used for external monitoring, locking and control purposes instead of the position transmitter equipment.

Prior to commissioning the transformer, check whether the motor-drive unit and on-load tap-changer are correctly coupled and that the motor-drive unit functions correctly.

#### Tests on the motor-drive unit

1. Perform function checks as described in relevant MR operating instructions for motor-drive unit.
2. NOTICE! An incorrectly coupled motor-drive unit will lead to damage to the on-load tap-changer. Undertake trial tap-change operations across the entire range of settings. Ensure that in each operating position, the tap position indicators of motor-drive unit and on-load tap-changer (inspection window in the on-load tap-changer head) match.

#### Dielectric tests on transformer wiring

- Note information relating to dielectric tests on transformer wiring in relevant MR operating instructions for motor-drive unit.

### 6.3.4 Checking protective relay

#### 6.3.4.1 Checking protective relay (RS 2001, 2001/V, 2001/H, 2001/E, 2001/5, 2001/R, 2001/T, 2003)

✓ Check that the protective relay is functioning correctly before commissioning the transformer:

1. Ground the transformer on the high-voltage side and low-voltage side. Ensure that the grounding for work connection on the transformer is not removed during testing.
2. Ensure that the transformer remains de-energized during testing.

3. Deactivate the automatic fire extinguishing device.
4. Loosen the three screws on the terminal box cover and lift off the terminal box cover.
5. Remove the slotted head screw for potential tie-in and remove the terminal box cover with wire.
6. Press OFF test button.
7. Leave the transformer's danger zone.
8. Ensure that the transformer's circuit breaker cannot be closed.
   » Passive protection test
9. Press OPERATION test button.
10 Leave the transformer's danger zone.
.
11. Close the transformer's circuit breaker with isolating switches open and the transformer grounded on all sides.
12 Press OFF test button.
.
13 Ensure that the transformer's circuit breaker is open.
.
   ⇨ Active protection test.
14. Press OPERATION test button to reset the protective relay.
15. Position the wire for the terminal box cover and affix using the slotted head screw.
16 Attach the terminal box cover and secure with screws.
.

#### 6.3.4.2 Checking protective relay (RS 2004)

✓ Check that the protective relay is functioning correctly before commissioning the transformer:
1. Ensure that the flap valve is in the OPERATION position.
2. Leave the transformer's danger zone.
3. Close the transformer's circuit breaker with isolating switches open and the transformer grounded on all sides.
4. Press OFF test button.
5. Ensure that the transformer's circuit breaker is open.
   » Active protection test

### 6.3.5 Checking pressure monitoring device

1. Ground the transformer on the high-voltage side and low-voltage side. Ensure that the grounding for work connection on the transformer is not removed during testing.
2. Ensure that the transformer remains de-energized during testing.
3. Deactivate the automatic fire extinguishing device.
4. Remove the cover cap.
5. Activate the sensor on the snap-action switch.
   » Sensor is in the OFF position.
6. Leave the transformer's danger zone.
7. Ensure that the transformer's circuit breaker cannot be closed.
   » Passive protection test
8. Activate the sensor on the snap-action switch.
   » Sensor is in the OPERATION position.
9. Leave the transformer's danger zone.
10 Close the transformer's circuit breaker with isolating switches open and the
. transformer grounded on all sides.
11. Activate the sensor on the snap-action switch.
   ⇨ Sensor is in the OFF position.

12 Ensure that the transformer's circuit breaker is open.
.
    ⇨ Active protection test.
13 Activate the sensor on the snap-action switch to reset the pressure monitor-
. ing device.
    ⇨ Sensor is in the OPERATION position.
14 Secure the cover cap.
.

### 6.3.6 Commissioning the transformer

- ✓ The signaling contact for falling below the minimum insulating fluid fill level in the on-load tap-changer's oil conservator is looped into the tripping circuit of the circuit breaker.
- ✓ The protective relay and additional protective devices are looped into the circuit breaker's tripping circuit.
- ✓ The motor-drive unit and all protective devices are functioning correctly and are ready for use.
- ✓ The oil compartment of the on-load tap-changer is completely filled with insulation fluid.
- ✓ All stop-cocks between on-load tap-changer and oil conservator of the on-load tap-changer are open.

1. Switch on transformer.
2. *NOTICE!* Inrush current impulses can be significantly greater than the transformer rated current and may lead to current paths with asymmetrical or non-sinusoidal curve shapes and, as a result, overload the on-load tap-changer during the diverter switch operation. Only perform tap-change operations - whether under no load or under load conditions - once the inrush current impulse has subsided.

# 7 Fault elimination

**⚠ WARNING**

### Danger of explosion!

Explosive gases under the on-load tap-changer head cover can deflagrate or explode and result in severe injury or death.

- Ensure that there are no ignition sources such as open flames, hot surfaces or sparks (e.g. caused by the build-up of static charge) in the immediate surroundings and that none occur.
- De-energize all auxiliary circuits (for example tap-change supervisory device, pressure relief device, pressure monitoring device) before removing the on-load tap-changer head cover.
- Do not operate any electrical devices during the work (e.g. risk of sparks from impact wrench).

***NOTICE***

### Damage to the on-load tap-changer and transformer!

If the protective relay or other protective devices trip, this can indicate damage to the on-load tap-changer and transformer. The transformer must not be energized without being inspected first.

- Check on-load tap-changer and transformer when protective relay or other protective devices have been tripped.
- Do not use the equipment again until you are sure there is no damage to the on-load tap-changer or transformer.

***NOTICE***

### Damage to motor-drive unit!

Damage to the motor-drive unit due to condensate in protective housing of motor-drive unit.

- Always keep protective housing of the motor-drive unit tightly closed.
- In the event of operation interruptions of more than 2 weeks, connect and operate the heater in the motor-drive unit. If this is not possible, e.g. during transportation, place a sufficient amount of desiccant in the protective housing.

The table below is intended to assist with detecting and, where possible, remedying faults.

For more information, please consult the operating instructions for the protective relay or the relevant protective device.

In the event of faults on the on-load tap-changer and motor-drive unit which cannot be easily corrected on site, or if the protective relay or additional protective devices have been tripped, please inform your authorized MR representative, the transformer manufacturer or contact MR directly.

Maschinenfabrik Reinhausen GmbH
Technical Service
Postfach 12 03 60
93025 Regensburg
Germany
Phone: +49 94140 90-0

Fax: +49 9 41 40 90-7001
E-mail: service@reinhausen.com
Internet: www.reinhausen.com

| Fault description | Action |
|---|---|
| Tripping of protective relay | See "Tripping the protective relay and re-commissioning the transformer"<br>Also contact MR. |
| Tripping of pressure relief device (e.g. MPreC®) | On-load tap-changer and transformer must be checked. Depending on the cause of tripping, take measurements / carry out checks on the transformer.<br>Contact MR to check the on-load tap-changer. |
| Tripping of pressure monitoring device (e.g. DW 2000) | See "Tripping the pressure monitoring device and putting the transformer back into operation"<br>Also contact MR. |
| Activation of tap-change supervisory device | The motor-drive unit can no longer be electrically actuated once the tap-change supervisory device has been activated. Manual operation of the motor-drive unit via the hand crank when the transformer is switched on is prohibited.<br>On-load tap-changer and transformer must be checked. Depending on the cause of tripping, take measurements / carry out checks on the transformer.<br>Contact MR to check the on-load tap-changer. |
| Activation of rupture disk in on-load tap-changer head cover | On-load tap-changer and transformer must be checked. Depending on the cause of tripping, take measurements / carry out checks on the transformer.<br>Contact MR to check the on-load tap-changer. |
| Tripping of motor protective switch in motor-drive unit | See chapter "Fault elimination" in the operating instructions of the motor-drive unit |
| Tripping of signaling contact that indicates that the fill level of the insulating fluid has fallen below the minimum in the on-load tap-changer oil conservator | Check pipe system (pipes etc.) and on-load tap-changer head for leaks. Check the fill level and the quality of the insulating fluid in the oil compartment in accordance with the operating instructions for the on-load tap-changer. If the fill level has fallen below the limit values, also contact MR. |
| On-load tap-changer not changing tap position (sluggishness, Raise keys / Lower keys not working, no audible diverter switch action) | Contact MR. |
| No change in voltage on the transformer despite change in position on motor-drive unit | Contact MR. |
| Tap position indicator on motor-drive unit and on-load tap-changer different | Contact MR. |
| Noises on drive shaft or motor-drive unit when changing tap position | Ensure proper mounting of the drive shaft in accordance with its operating instructions. Check that hose clips and protective covers are seated correctly. Contact MR in the event of noise from the motor-drive unit. |
| Red message on monitoring unit | If possible read out database and send to MR along with error code. |
| Warning or tripping of Buchholz relay on transformer | Notify transformer manufacturer. |
| Deviation from desired value when measuring winding resistance of transformer | Contact transformer manufacturer and, if necessary, MR, and provide measured values. |

| Fault description | Action |
|---|---|
| Deviation from desired value during dissolved gas analysis (transformer oil) | Contact transformer manufacturer and, if necessary, MR, and provide measured values. |
| Deviation from desired value during transformer ratio test | Contact transformer manufacturer and, if necessary, MR, and provide measured values. |
| Deviation from limit value for insulating fluids | Carry out insulating fluid change, check oil conservator breather of on-load tap-changer. |

Table 7: Fault elimination

## 7.1 Tripping the protective relay and re-commissioning the transformer

**⚠ WARNING**

### Danger of explosion!

Explosive gases in the protective relay can deflagrate or explode and result in severe injury or death.

- Wait 15 minutes after switching off the transformer before beginning further work on the protective relay so that the gases can dissipate.
- Ensure that there are no ignition sources such as naked flames, hot surfaces or sparks (e.g. caused by the build-up of static charge) in the immediate surroundings and that none occur.
- De-energize all auxiliary circuits before beginning work.
- Do not operate any electrical devices during the work (e.g. risk of sparks from impact wrench).

**⚠ WARNING**

### Danger of death or severe injury!

Danger of severe injury or death if on-load tap-changer and transformer are insufficiently tested.

- Be sure to contact Maschinenfabrik Reinhausen to check on-load tap-changer and transformer if the protective relay has tripped.
- Only use the equipment again when you are sure there is no damage to the on-load tap-changer or transformer.

When the circuit breakers have been tripped by the protective relay, proceed as follows:

1. Establish time of tripping.
2. Determine operating position of on-load tap-changer.
3. As a precaution, block the motor-drive unit by tripping the motor protective switch to prevent the on-load tap-changer from being actuated by remote control.
4. Check the on-load tap-changer head cover. If insulating fluid is leaking, close the oil conservator stop valve immediately.
5. Check whether the flap valve of the protective relay is in the OFF or OPERATION position.

### 7.1.1 Flap valve in OPERATION position

If the flap valve is in the OPERATION position, there may be a fault in the tripping circuit. Check the tripping circuit in this case. If you are not able to clarify why the protective relay tripped, be sure to contact Maschinenfabrik Reinhausen to check the on-load tap-changer.

### 7.1.2 Flap valve in OFF position

> Note that protective relay RS 2004 features an automatic reset mechanism which means that the flap valve does not remain in the OFF position after tripping. If the protective relay RS 2004 has not tripped due to an error in the tripping circuit, also proceed as described below for RS 2004.

If the flap valve is in the OFF position, proceed as follows:

1. Ensure that the transformer is not started up under any circumstances.
2. Contact and inform Maschinenfabrik Reinhausen of the following:
   - » Serial number of protective relay and on-load tap-changer
   - » What was the load of the transformer at the instant of tripping?
   - » Was the on-load tap-changer moved immediately before or during tripping?
   - » Did any other protective devices of the transformer respond at the instant of tripping?
   - » Were switching operations in the network being carried out at the instant of tripping?
   - » Were overvoltages registered at the instant of tripping?
3. Take further action in agreement with Maschinenfabrik Reinhausen.

### 7.1.3 Re-commissioning the transformer

Once the reason for the protective relay tripping has been established and remedied, you can re-commission the transformer:

1. Check the protective relay [►Section 6.3.4.1, Page 144].
2. Commission the transformer.

## 7.2 Tripping the pressure monitoring device and putting the transformer back into operation

**⚠ WARNING**

**Danger of death or severe injury!**

Danger of severe injury or death if on-load tap-changer and transformer are insufficiently tested.

- Be sure to contact Maschinenfabrik Reinhausen to check on-load tap-changer and transformer after the pressure monitoring device has been tripped.
- Only use the equipment again when you are sure there is no damage to the on-load tap-changer or transformer.

If the circuit breaker is tripped by the pressure monitoring device, proceed as follows:

1. Establish time of tripping.
2. Determine operating position of on-load tap-changer.
3. As a precaution, block the motor-drive unit by tripping the motor protective switch to prevent the on-load tap-changer from being actuated by remote control.
4. Check the on-load tap-changer head cover. If insulating fluid is leaking, close the oil conservator stop valve immediately.
5. Check whether the pressure monitoring device sensor is in the OFF position or OPERATION position.

### 7.2.1 Sensor in the OPERATION position

If the sensor is in the OPERATION position, there may be an error in the tripping circuit. Check the tripping circuit in this case. If you are not able to clarify why the pressure monitoring device tripped, be sure to contact Maschinenfabrik Reinhausen to check the on-load tap-changer.

### 7.2.2 Sensor in the OFF position

Proceed as follows if the sensor is in the OFF position.

1. Ensure that the transformer is not started up under any circumstances.
2. Contact and inform Maschinenfabrik Reinhausen of the following:
   - What was the load of the transformer at the instant of tripping?
   - Was there a tap-change operation on the on-load tap-changer immediately before or during the tripping?
   - Did any other protective devices of the transformer respond at the instant of tripping?
   - Were switching operations in the network being carried out at the instant of tripping?
   - Were overvoltages registered at the instant of tripping?
   - How high is the static pressure on the pressure relief device (height difference between the oil level in the on-load tap-changer oil conservator and the pressure relief device)?
3. Take further action in agreement with Maschinenfabrik Reinhausen.

### 7.2.3 Re-commissioning the transformer

You can re-commission the transformer once the cause for tripping the pressure monitoring device has been determined and resolved:

1. Ensure that the sensor on the snap-action switch is in the OPERATION position.
2. Commission the transformer.

# 8 Technical data

The key technical data for the on-load tap-changer is summarized in this chapter.

Further information on the selection of on-load tap-changers in general can be found in the chapters "Tap-changer designation", "Electrical properties" and "Selecting the on-load tap-changer" in the technical data TD61.

## 8.1 Technical data for on-load tap-changer

### 8.1.1 On-load tap-changer properties

#### Electrical data for VACUTAP® VV®

| On-load tap-changer | VV III 250 Y/D | VV III 400 Y/D | VV III 600 Y/D | VV I 401[2] |
|---|---|---|---|---|
| Max. rated through-current $I_{um}$ [A] | 250 | 400 | 600 | 400 |
| Rated short-time current [kA] | 6 | | | |
| Rated duration of short-circuits [s] | 3 | | | |
| Rated peak withstand current [kA] | 15 | | | |
| Max. rated step voltage $U_{im}$ [V] | 2 000 | 2 000...1 700[1] | 2 000...1 000[1] | 2 000...1 700[1] |
| Max. step capacity $P_{StN}$ [kVA] | see step capacity diagram | | | |
| Rated frequency [Hz] | 50...60 | | | |
| Number of operating positions | Without change-over selector: maximum 12<br>With change-over selector: maximum 23 | | | With change-over selector: maximum 23 |
| [1] See also step capacity diagram<br>[2] 600 A model on request | | | | |

Table 8: Electrical data for VACUTAP® VV®

#### Mechanical data for VACUTAP® VV®

| On-load tap-changer | VV III 40 kV | | VV III 76 kV | | VV III 145 kV | | VV I 76 kV | | VV III 145 kV | |
|---|---|---|---|---|---|---|---|---|---|---|
| Weight without insulating fluid [approx., kg] | 240 | | 255 | | 280 | | 200 | | 215 | |
| Displacement volume [$dm^3$] | 295 | | 328 | | 405 | | 148 | | 178 | |
| Filling quantity $V_s$ and minimum oil conservator volume $\Delta V$[1] [$dm^3$] | $V_s$ | $\Delta V$ | $V_s$ | $\Delta V$ | $V_s$ | $\Delta V$ | $V_s$ | $\Delta V$ | $V_s$ | $\Delta V$ |
| | 240 | 30 | 265 | 33 | 325 | 39 | 125 | 16 | 145 | 19 |
| Dimensions | See dimensional drawings | | | | | | | | | |
| [1] Applies to insulating fluid temperature $\vartheta$ = -30...+100 °C | | | | | | | | | | |

Table 9: Mechanical data for VACUTAP® VV®

## 8.1.2 Permissible ambient conditions

| | |
|---|---|
| Air temperature during operation | -25°C...+50°C |
| Temperature of the insulating fluid in operation | -25°C...+105°C (up to +115°C when the transformer is in emergency operation) |
| Transport temperature, storage temperature | -40°C...+50°C |
| Drying temperatures | See installation and commissioning instructions, "Mounting" chapter |
| Compressive strength | The on-load tap-changer oil compartment is pressure-resistant to 0.3 bar of continuous differential pressure (test pressure 0.6 bar). The head and cover of the on-load tap-changer and de-energized tap-changer are vacuum-resistant. |
| Insulating fluid | – Unused insulating oils derived from petroleum products[1)] in accordance with IEC 60296 and ASTM D3487 (equivalent standards on request)<br>– Unused insulating oils derived from other virgin hydrocarbons in accordance with IEC 60296, or blends of these oils with petroleum products[1)] in accordance with IEC 60296, ASTM D3487 or equivalent standards on request<br>– Alternative insulating fluids, such as natural and synthetic esters or silicone oils, on request.<br>[1)] Gas-to-liquid oils (GTL oils) are understood in this context to be petroleum products |

Table 10: Permissible ambient conditions

## 8.1.3 Height of the oil conservator

The permissible heights for the oil conservators of the on-load tap-changer and transformer must be observed. These ensure:
- seal integrity of on-load tap-changer oil compartment in relation to surroundings and transformer
- correct function (e.g. switching process) of on-load tap-changer and other pressure-dependent devices

The standard on-load tap-changer model is designed for a maximum oil conservator height $H_{max}$ of **up to 5 m**. To calculate this height, the distance between the maximum oil level in the oil conservator and the top edge of the on-load tap-changer head cover must be determined.

If the height $H_{max}$ of the oil level in the on-load tap-changer's oil conservator is more than 5 m above the on-load tap-changer head cover, this must be stated in the order so that an appropriate product variant can be selected.

For VACUTAP® on-load tap-changers at installation heights $H_{NHN}$ of more than 2,000 m above sea level, the maximum permissible height $H_{max}$ of the oil conservator is increased by the minimum distance $H_{max}$ between the oil level and on-load tap-changer head cover in accordance with section Installation height above sea level.

### Difference in height Δh between oil levels in on-load tap-changer and transformer

If the oil conservators for the on-load tap-changer and transformer are in separate locations, the difference in height Δh between the oil levels may be a **maximum of 3 m**.

If the on-load tap-changer and transformer share an oil conservator (with or without divider), this difference is not normally reached. With a shared oil conservator, the difference in height can then be ignored.

## 8.1.4 Installation height above sea level

VACUTAP® oil-insulated on-load tap-changers with an open oil conservator are released without limitations up to an installation height $H_{NHN}$ of 2,000 m above sea level. Above 2,000 m, a minimum height must be observed for the oil conservator.

The installation height of the oil conservator is determined by the distance $H_{min}$ between the upper edge of the on-load tap-changer head cover and the oil level in the oil conservator.

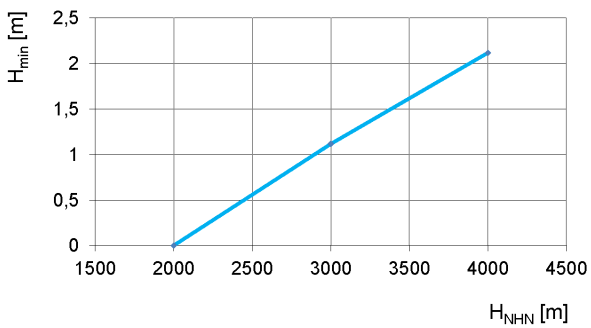


Figure 182: Minimum distance $H_{min}$ between oil level and on-load tap-changer head cover

| | |
|---|---|
| $H_{min}$ | Distance between oil level in the oil conservator and upper edge of the on-load tap-changer head cover. |
| $H_{NHN}$ | Installation height above sea level |

For VACUTAP® on-load tap-changers at installation heights $H_{NHN}$ of more than 2,000 m above sea level, the maximum permissible height of the oil conservator (in accordance with section Height of oil conservator ) is increased by this minimum distance $H_{min}$ between the oil level and on-load tap-changer head cover.

## 8.2 Technical data for protective relay

The technical data for the protective relay RS 2001 is listed in the following. In accordance with DIN EN 60255-1, operational accuracy = base accuracy

| | |
|---|---|
| Housing | Outdoor model |
| Degree of protection | IP66 |
| Relay actuation | Flap valve with aperture |
| Weight | approx. 3.5 kg |
| Oil flow speed of available types when tripping (oil temperature 20 °C) | 0.65 ± 0.15 m/s<br>1.20 ± 0.20 m/s<br>3.00 ± 0.40 m/s<br>4.80 ± 0.60 m/s |

Table 11: General technical data

### Tripping circuit

The protective relay can be supplied with either a normally open (NO) or a normally closed (NC) dry-reed magnetic switch (see dimensional drawing supplied). Other contact combinations are available as a special version.

### Electrical data for normally closed (NC) dry-reed magnetic switch

| Electrical data | |
|---|---|
| DC switching capacity | 1.2 W...200 W |
| AC switching capacity (50 Hz) | 1.2 VA...400 VA |
| Switching voltage AC/DC | 24 V...250 V |
| Switched current AC/DC | 4.8 mA...2 A |

Table 12: Electrical data

| Switching capacity (switching load on an off) | |
|---|---|
| Minimum switched current AC/DC (lowest voltage) | 50 mA (at 24 V) |
| Minimum switched current AC/DC (highest voltage) | 4.8 mA (at 250 V) |
| Maximum switched current DC (highest current) | 1.6 A (at 125 V with L/R = 40 ms) |
| Maximum switched current DC (highest voltage) | 0.9 A (at 250 V with L/R = 40 ms) |
| Maximum switched current AC (highest current) | 2 A (at 125 V with cos φ = 0.6) |
| Maximum switched current AC (highest voltage) | 1.6 A (at 250 V with cos φ = 0.6) |
| Switching operations | 1,000 cycles |

Table 13: Switching capacity (switching load on an off)

| Dielectric strength | |
|---|---|
| AC dielectric strength between all voltage-carrying connections and the grounded parts | 2,500 V, 50 Hz, test duration 1 minute |
| AC dielectric strength between the opened contacts | 2,000 V, 50 Hz, test duration 1 minute |

Table 14: Dielectric strength

## Electrical data for normally open (NO) dry-reed magnetic switch

| Electrical data | |
|---|---|
| DC switching capacity | 1.2 W...250 W |
| AC switching capacity (50 Hz) | 1.2 VA...400 VA |
| Switching voltage AC/DC | 24 V...250 V |
| Switched current AC/DC | 4.8 mA...2 A |

Table 15: Electrical data

| Switching capacity (switching load on an off) | |
|---|---|
| Minimum switched current AC/DC (lowest voltage) | 50 mA (at 24 V) |
| Minimum switched current AC/DC (highest voltage) | 4.8 mA (at 250 V) |
| Maximum switched current DC (highest current) | 2 A (at 125 V with L/R = 40 ms) |
| Maximum switched current DC (highest voltage) | 1 A (at 250 V with L/R = 40 ms) |
| Maximum switched current AC (highest current) | 2 A (at 125 V with cos φ = 0.6) |
| Maximum switched current AC (highest voltage) | 1.6 A (at 250 V with cos φ = 0.6) |
| Switching operations | 1,000 cycles |

Table 16: Switching capacity (switching load on an off)

| Dielectric strength | |
|---|---|
| AC dielectric strength between all voltage-carrying connections and the grounded parts | 2,500 V, 50 Hz, test duration 1 minute |
| AC dielectric strength between the opened contacts | 2,000 V, 50 Hz, test duration 1 minute |

Table 17: **Dielectric strength**

## Ambient conditions

| | |
|---|---|
| Ambient temperature Ta | -40°C...+50°C |
| Oil temperature | <130 °C |
| Air pressure | Corresponds to 0 m...4,000 m above sea level |

Table 18: Ambient conditions

# 8.3 Special models of protective relay

## 8.3.1 Protective relay with CO change-over contact as tripping switch

The protective relay can be supplied with a dry-reed magnetic switch, CO change-over (variant 3) (see dimensional drawing supplied).

### Electrical data for CO change-over dry-reed magnetic switch

| Electrical data | |
|---|---|
| DC switching capacity | 1.2 W...150 W |
| AC switching capacity (50 Hz) | 1.2 VA...200 VA |
| Switching voltage AC/DC | 24 V...250 V |
| Switched current AC/DC | 4.8 mA...1 A |

Table 19: Electrical data

| Switching capacity (switching load on an off) | |
|---|---|
| Minimum switched current AC/DC (lowest voltage) | 50 mA (at 24 V) |
| Minimum switched current AC/DC (highest voltage) | 4.8 mA (at 250 V) |
| Maximum switched current DC (highest current) | 1.0 A (at 150 V with L/R = 40 ms) |
| Maximum switched current DC (highest voltage) | 0.6 A (at 250 V with L/R = 40 ms) |
| Maximum switched current AC (highest current) | 1 A (at 200 V with cos φ = 0.6) |
| Maximum switched current AC (highest voltage) | 0.8 A (at 250 V with cos φ = 0.6) |
| Switching operations | 1,000 cycles |

Table 20: **Switching capacity (switching load on an off)**

| Dielectric strength | |
|---|---|
| AC dielectric strength between all voltage-carrying connections and the grounded parts | 2,500 V, 50 Hz, test duration 1 minute |
| AC dielectric strength between the opened contacts | 1,150 V, 50 Hz, test duration 1 minute |

Table 21: Dielectric strength

## 8.3.2 Protective relay with several dry-reed magnetic switches

The protective relay can be supplied with several independent dry-reed magnetic switches. These can be designed as normally open (NO) or normally closed (NC) contacts and are electrically isolated (see dimensional drawing supplied).

Electrical data for normally open (NO) and normally closed (NC) dry-reed magnetic switch

## 8.4 Technical data for pressure monitoring device

### General technical data

| | |
|---|---|
| Setup | Outdoor model |
| Ambient temperature | -40 °C...+80 °C (mechanical) |
| Cable gland | M25x1.5 |
| Degree of protection | IP55 in accordance with IEC 60529 (enclosed device) |
| Relay actuation | Corrugated tubing with counter-pressure spring |
| Oil temperature | -40 °C...+100 °C |
| Weight | approx. 1.2 kg |
| Equipment | For standard insulating fluids (IEC60296 and IEC60422) |
| Sealing material<br>(oil – air) | VITON |
| Permitted pressure range<br>(absolute pressure) | 1 bar...6 bar, vacuum not permitted |
| Upper switching pressure | 3.8 ± 0.2 bar (trip pressure) |
| Lower switching pressure | 2,8 ± 0,2 bar |
| **Snap-action switch** | |
| Connection terminals | Lead connection: 1 or 2 leads per terminal<br>(Ø 0.75...2.5 $mm^2$) |
| Contacts | 1xNO (normally open), 1xNC (normally closed) |
| Utilization category | IEC 60947-5-1:<br>AC 15: 230 V/1 A<br>DC 13: 60 V/0.5 A |
| Maximum continuous current | 10 A |
| Rated insulation voltage | AC: 2.5 kV/min |

Table 22: General technical data

## 8.5 Limit values for dielectric strength and water content of insulating fluids

| Limit values for insulating fluids in accordance with IEC 60296 | $U_d$ | $H_2O$ |
|---|---|---|
| When commissioning the transformer for the first time | > 60 kV/2.5 mm | < 12 ppm |
| During operation | > 30 kV/2.5 mm | < 30 ppm |
| After maintenance | > 50 kV/2.5 mm | < 15 ppm |

Table 23: Limit values for insulating fluids in accordance with IEC 60296, dielectric strength measured in accordance with IEC 60156, water content measured in accordance with IEC 60814

| Limit values for natural esters in accordance with IEC 62770 | $U_d$ | $H_2O$ |
|---|---|---|
| When commissioning the transformer for the first time | > 60 kV/2.5 mm | ≤ 100 ppm |
| During operation | > 30 kV/2.5 mm | ≤ 200 ppm |
| After maintenance | > 50 kV/2.5 mm | ≤ 100 ppm |

Table 24: Limit values for natural esters in accordance with IEC 62770, dielectric strength measured in accordance with IEC 60156, water content measured in accordance with IEC 60814

| Limit values for synthetic esters in accordance with IEC 61099 | $U_d$ | $H_2O$ |
|---|---|---|
| When commissioning the transformer for the first time | > 60 kV/2.5 mm | ≤ 100 ppm |
| During operation | > 30 kV/2.5 mm | ≤ 400 ppm |
| After maintenance | > 50 kV/2.5 mm | ≤ 150 ppm |

Table 25: Limit values for synthetic esters in accordance with IEC 61099, dielectric strength measured in accordance with IEC 60156, water content measured in accordance with IEC 60814

# 9 Drawings

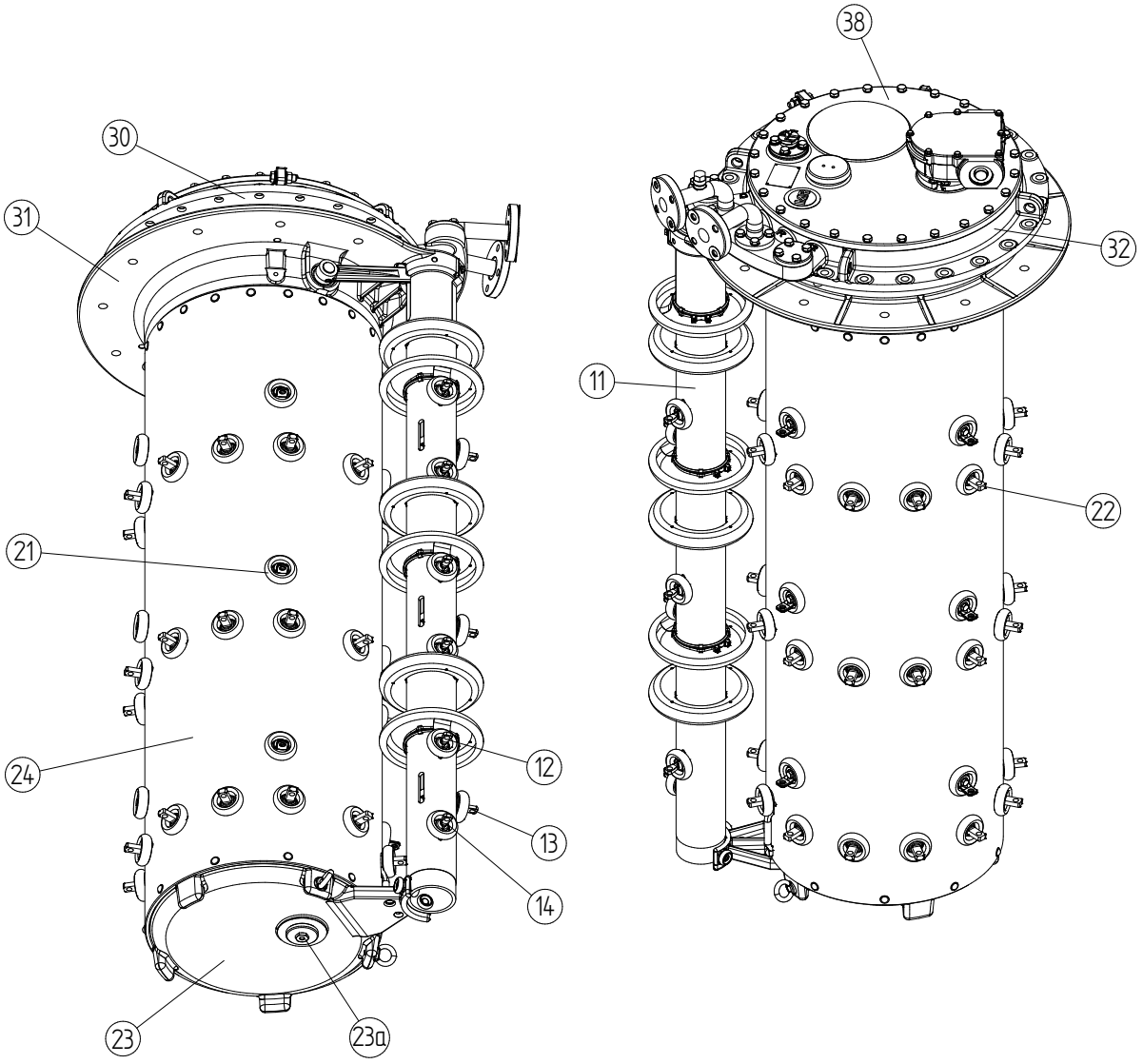

⑪ = Change-over selector pipe

⑫ = Change-over selector terminal "+"

⑬ = Change-over selector terminal "0"

⑭ = Change-over selector terminal "–"

㉑ = Take-off terminal

㉒ = Fine tap selector terminal

㉓ = Oil compartment bottom with kerosene drain plug 23a

㉔ = Tap changer oil compartment

㉚ = Tap changer head complete with 31 und 32 , refer to 898 863 : and 737 060 :

㉛ = Tap changer head – bottom part

㉜ = Tap changer head – top part

㊳ = Tap changer head cover

| Ch. In | Chango No. | Date | Name |
|---|---|---|---|
| 0E | 1016449 | 20.01.09 | SPL |

dftr. SPL 20.01.09
chkd

On-Load Tap-Changer VACUTAP ® VV
Classification

737774 0E

DIN A1

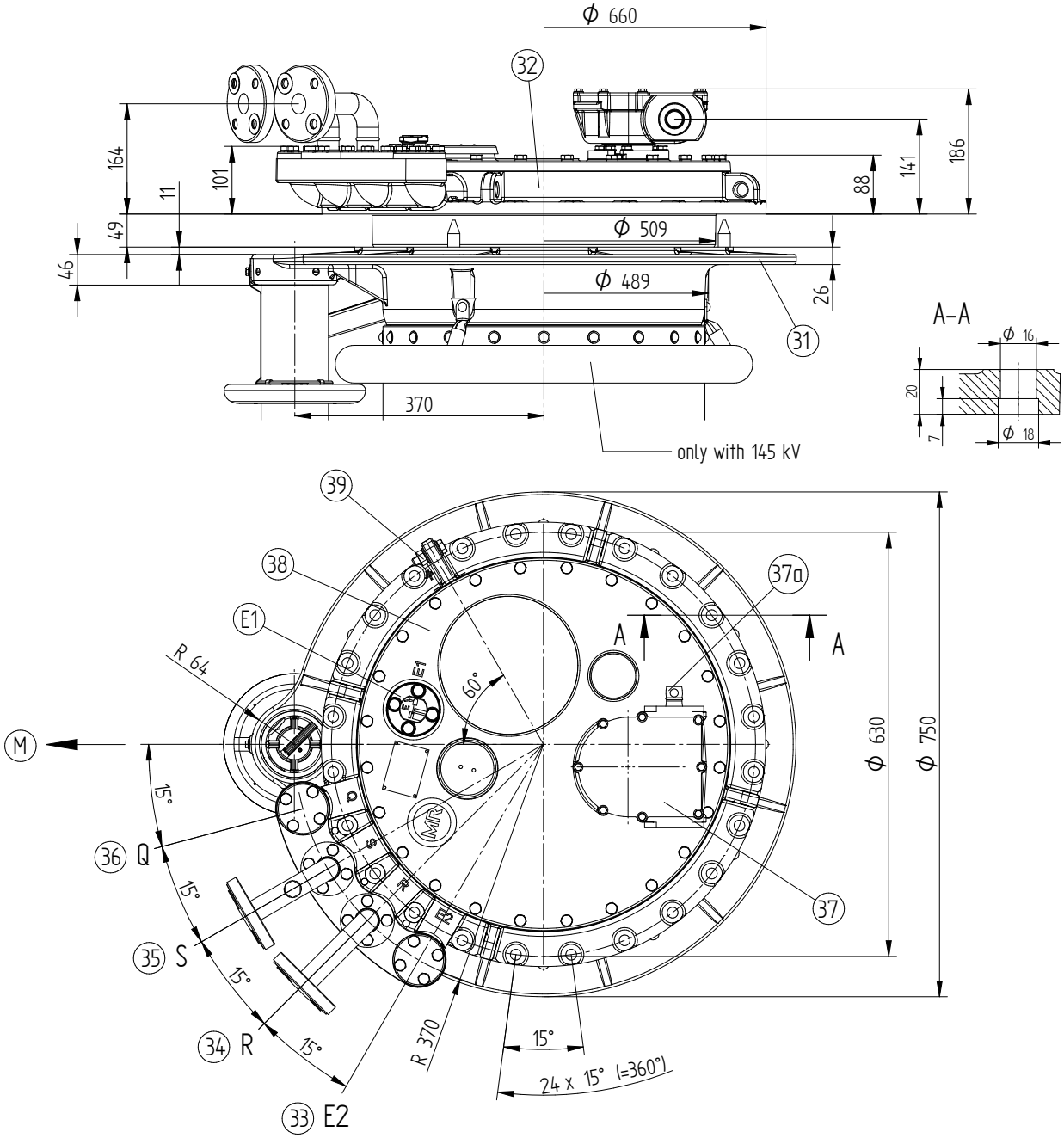


(E1) Bleeding facility for Tap-Changer

(31) Tap-Changer head - bottom part

(32) Tap-Changer head - top part , can be turned towards the bottom part (31) of the head in steps of 15°
The Tap-Changer head cover cannot be turned.

(33) E2 = Bleeding facility for space under the head outside the oil compartment

(34) Pipe connection R for protective relay

(35) Pipe connection S

(36) Pipe connection Q (optional)

Connections can be swivelled 360°
dimensions and selection 899 496 :

(37) Upper gear unit with drive shaft 37a , dimensions and selection see 737 782 :

(38) Tap changer head cover

(39) Earth connection M12

(M) Drive side

⚠ The upper part of the OLTC head (32) CANNOT be turned in the model with oil suction pipe , see drawing 737 060 :

| | | | | | |
|---|---|---|---|---|---|
| | SE | 1020509 | 1020509 | SPL | |
| | SE | 1090449 | 1200109 | SPL | |
| | ZE | Änderung | Datum | Name | |

dfr: SPL 29.01.09
ctkd

MR

On-Load Tap-Changer VACUTAP ® V V

Tap-Changer head without oil suction pipe

898863 8E

DIN A1

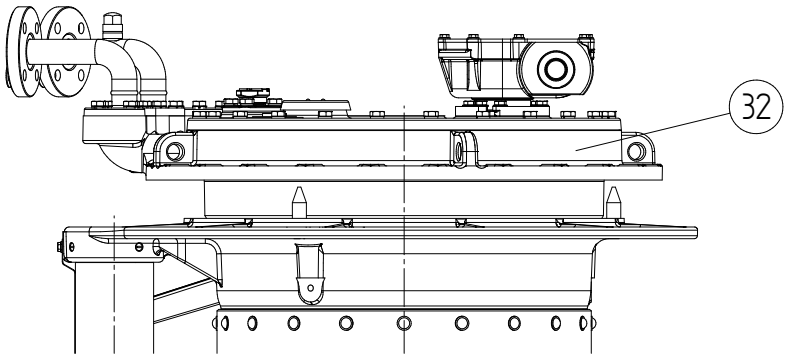

POSITION OF THE UPPER PART OF THE OLTC HEAD IN THE MODEL WITH OIL SUCTION PIPE

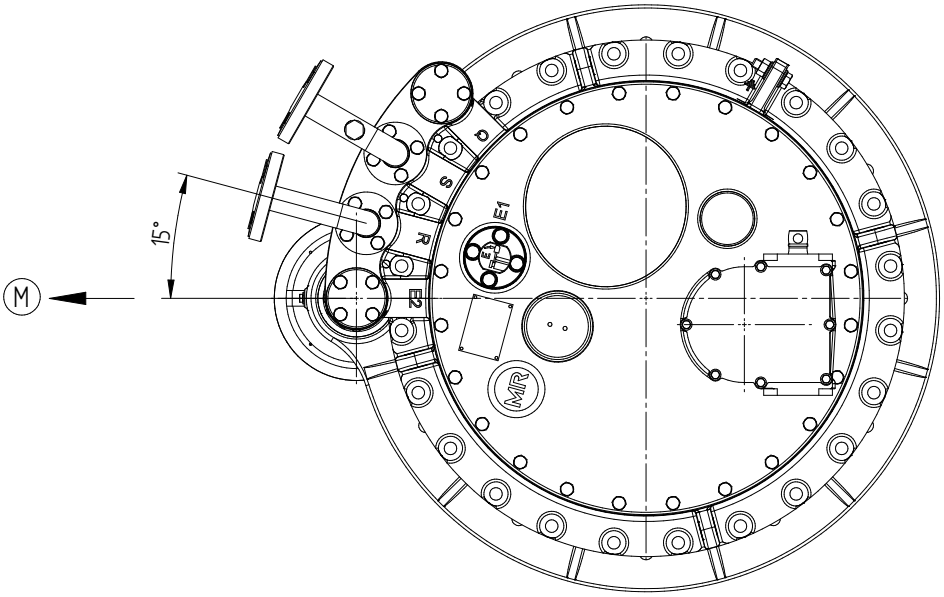

ALL OTHER DIMENSIONS OF THE OLTC HEAD SEE DRAWING 898 863 :

Ⓜ = DRIVE SIDE

⚠ THE UPPER PART OF THE OLTC HEAD ㉜ CANNOT BE TURNED IN THE MODEL WITH OIL SUCTION PIPE

| Ch. In | Chango No. | Date | Name |
|---|---|---|---|
| OE | 1019489 | 19.01.09 | SPL |
| OE | 1019535 | 21.01.09 | SPL |

dftr. SPL 19.01.09
chkd

# ON-LOAD TAP-CHANGER VACUTAP ® V V
# OLTC HEAD WITH OIL SUCTION PIPE

737060 OE

DIN A1

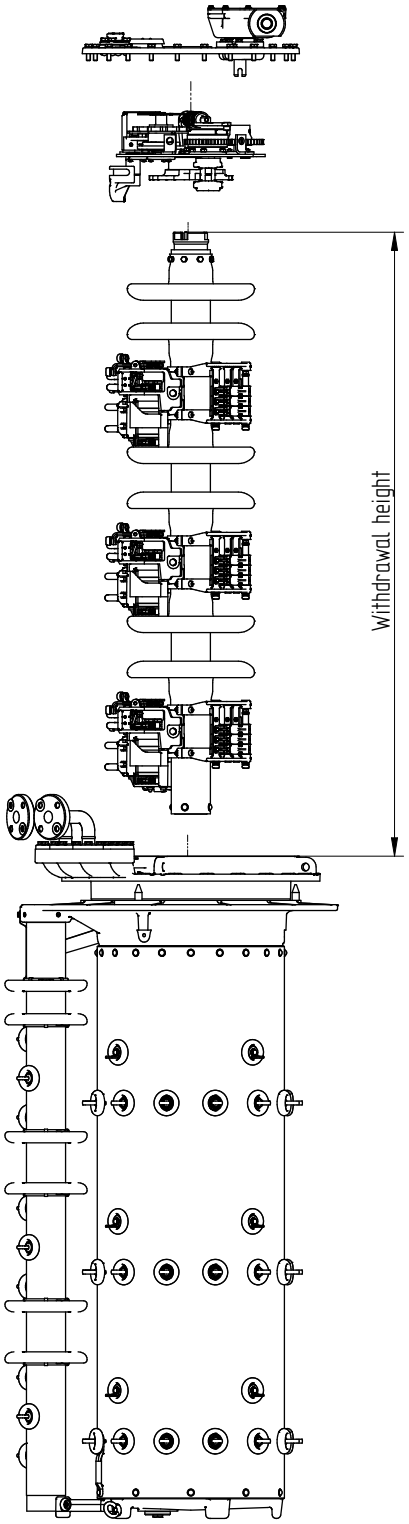

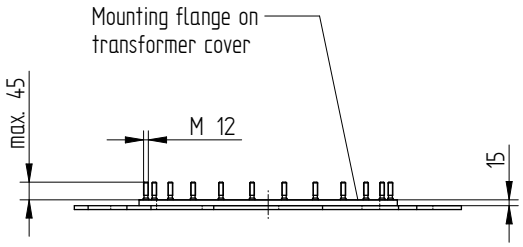

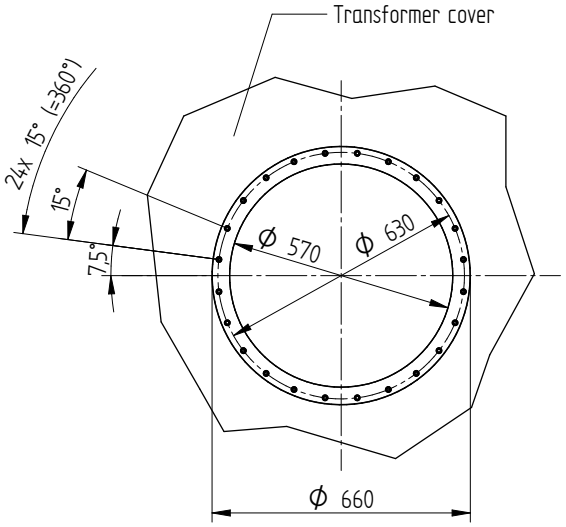

| On-Load Tap-Changer | Withdrawal height |
|---|---|
| V V I - 76 kV | 920 mm |
| V V I - 145 kV | 1070 mm |
| V V III - 40 kV<br>V V III - 76 kV | 1910 mm |
| V V III - 145 kV | 2310 mm |

⚠ The withdrawal height corresponds to the clearance between the cover flange and the lifting device of the OLTC insert, while the mounting rod is inserted. Additional fixing pads, which may be necessary for affixing the OLTC insert, have to be considered too.

| Ch. In | Change No. | Date | Name |
|---|---|---|---|
| 0E | 1016449 | 210109 | SPL |

dftr. SPL 210109
chkd

MR

On-Load Tap-Changer VACUTAP ® V V
Installation drawing

738902 0E

DIN A1

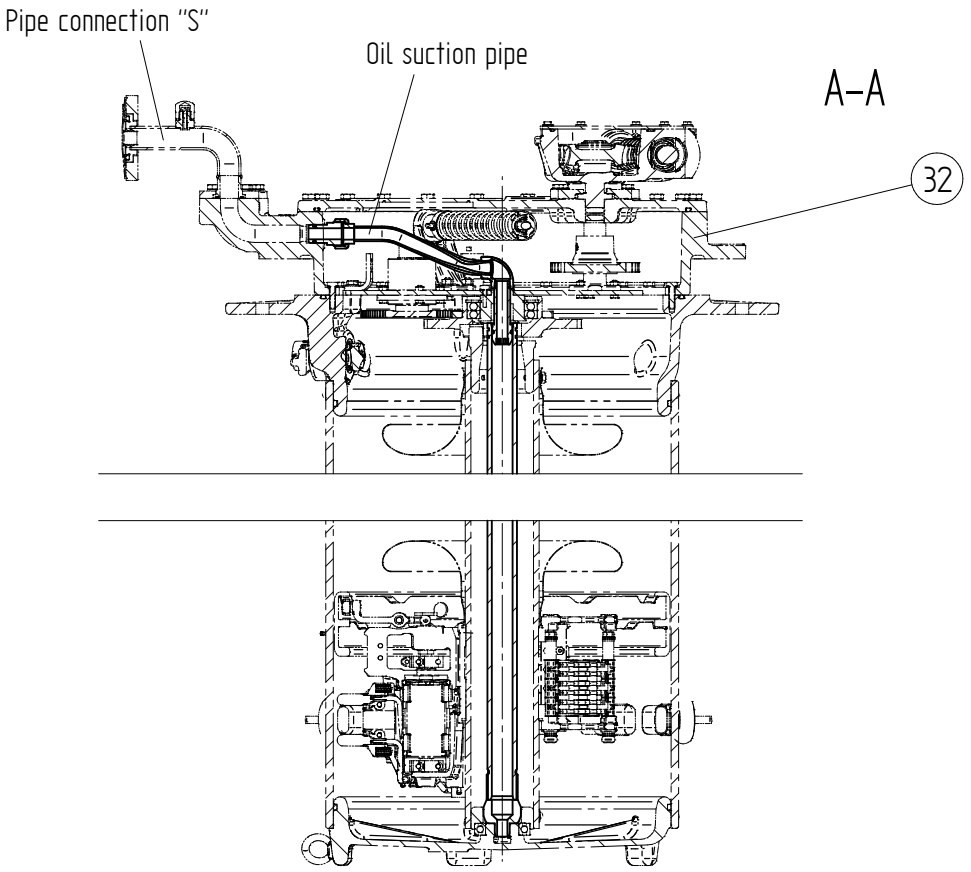


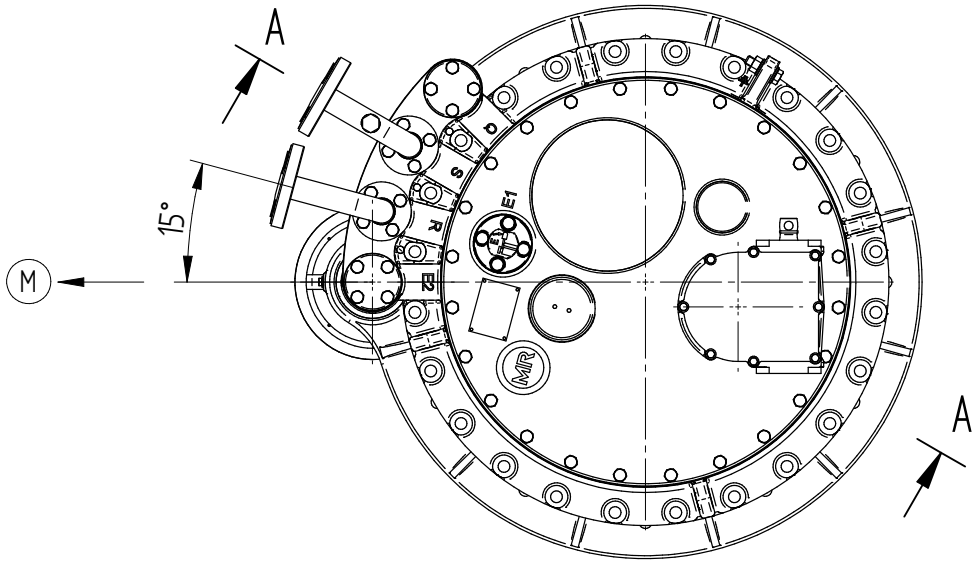


(M) Drive side

The upper part of the OLTC head (32) CANNOT be turned in the model with oil suction pipe , see drawing 737 060 :

| Ch. In | Change. No | Date | Name |
|---|---|---|---|
| dfr. | SPL | 05.02.09 | |
| chkd | | | |

On-Load Tap-Changer VACUTAP ® V V

Oil suction pipe (optional)

739172 0E

DIN A2

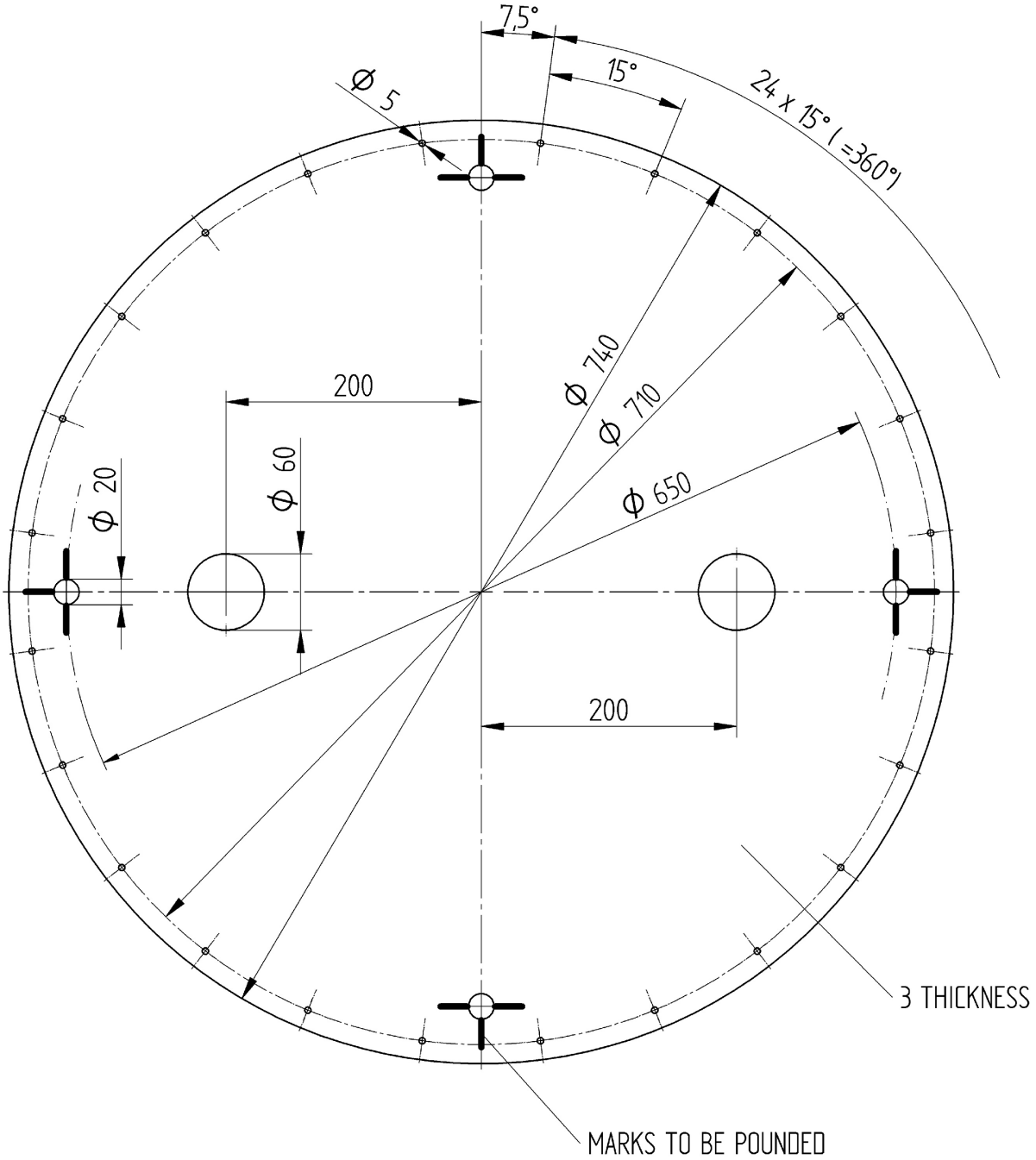


| | | | | |
|---|---|---|---|---|
| 01 | 10166.23 | 11.07.06 | BIM | |
| 00 | 052749 | 08.09.04 | BHA | |
| Änd.-I | Änd.-Nr. | Tag | Name | |

gez. BHA 08.09.04
gepr. Maier

MR

ON-LOAD TAP-CHANGER VACUTAP®, OILTAP®
DRILLING TEMPLATE FOR
ON-LOAD TAP-CHANGER HEAD

8901838E

DIN A2

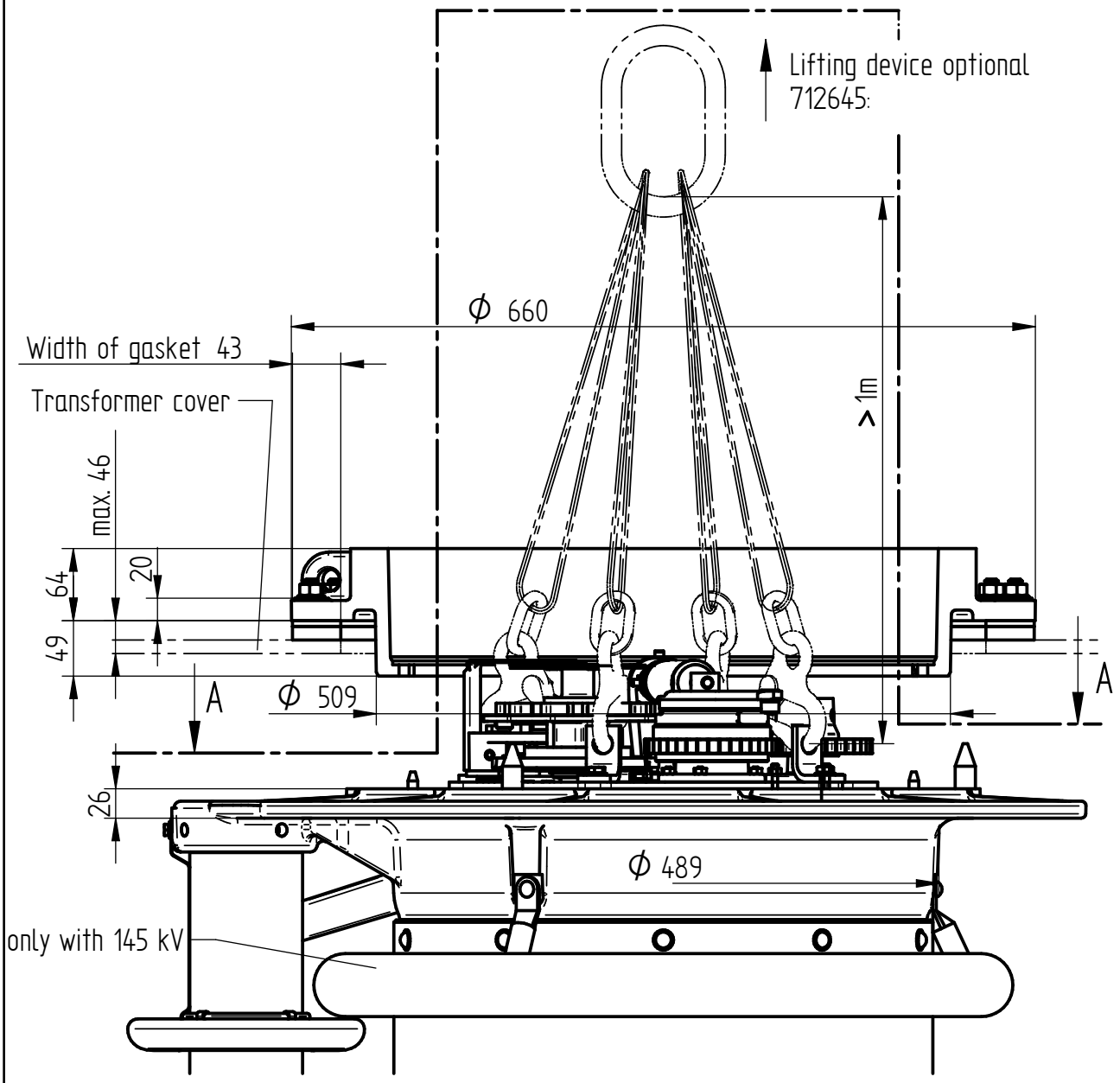


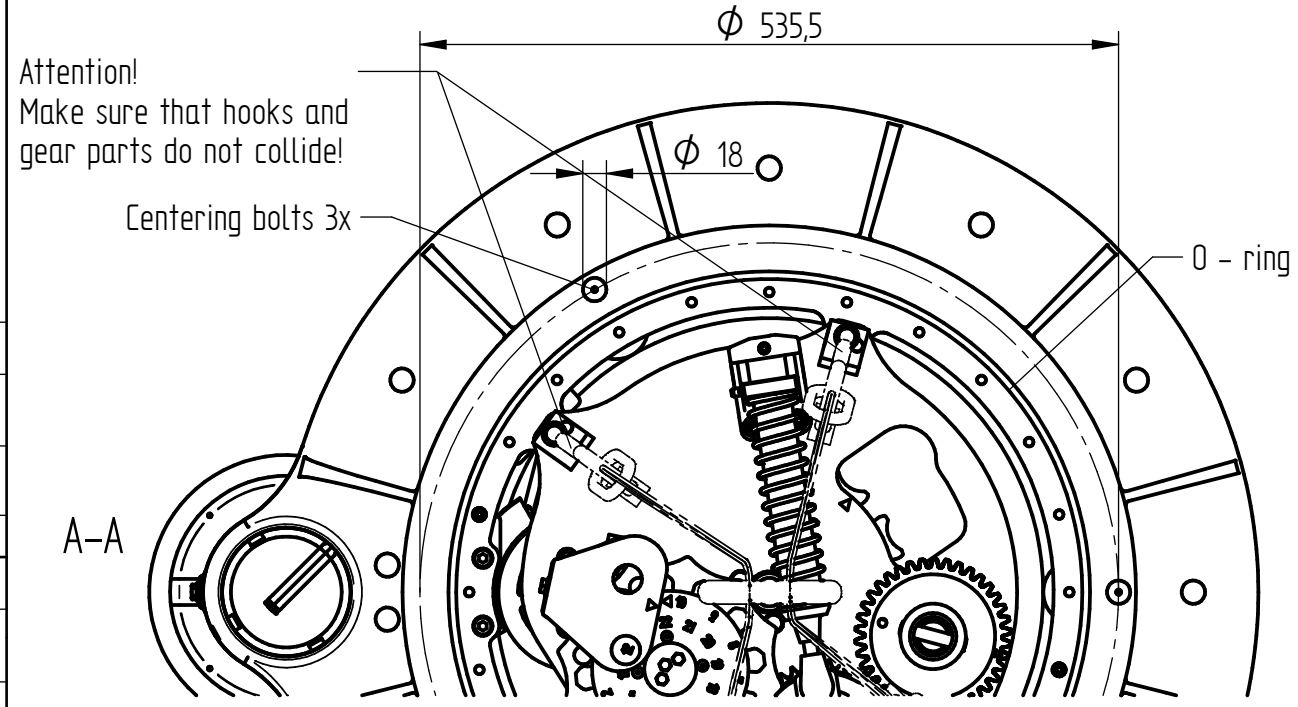




| | | | | | | | | | | |
|---|---|---|---|---|---|---|---|---|---|---|
| 8E | 1006204 | 02.02.06 | SPL | | | | | | | |
| 7E | 043849 | 18.12.02 | DC | | | | | | | |
| 6E | 042782 | 21.11.02 | DC | | | | | | | |
| 5E | 037102 | 05.11.01 | EN | | | | | | | |
| Ae. I | Aend.-Nr. | Tag | Name | 4.0 | 028788 | 03.07.00 | DC | | | |

gez. Str 22.11.02
gepr. Albrecht

MR

On-Load Tap-Changer VACUTAP® V V
assembly drawing cover mounting

8988668E

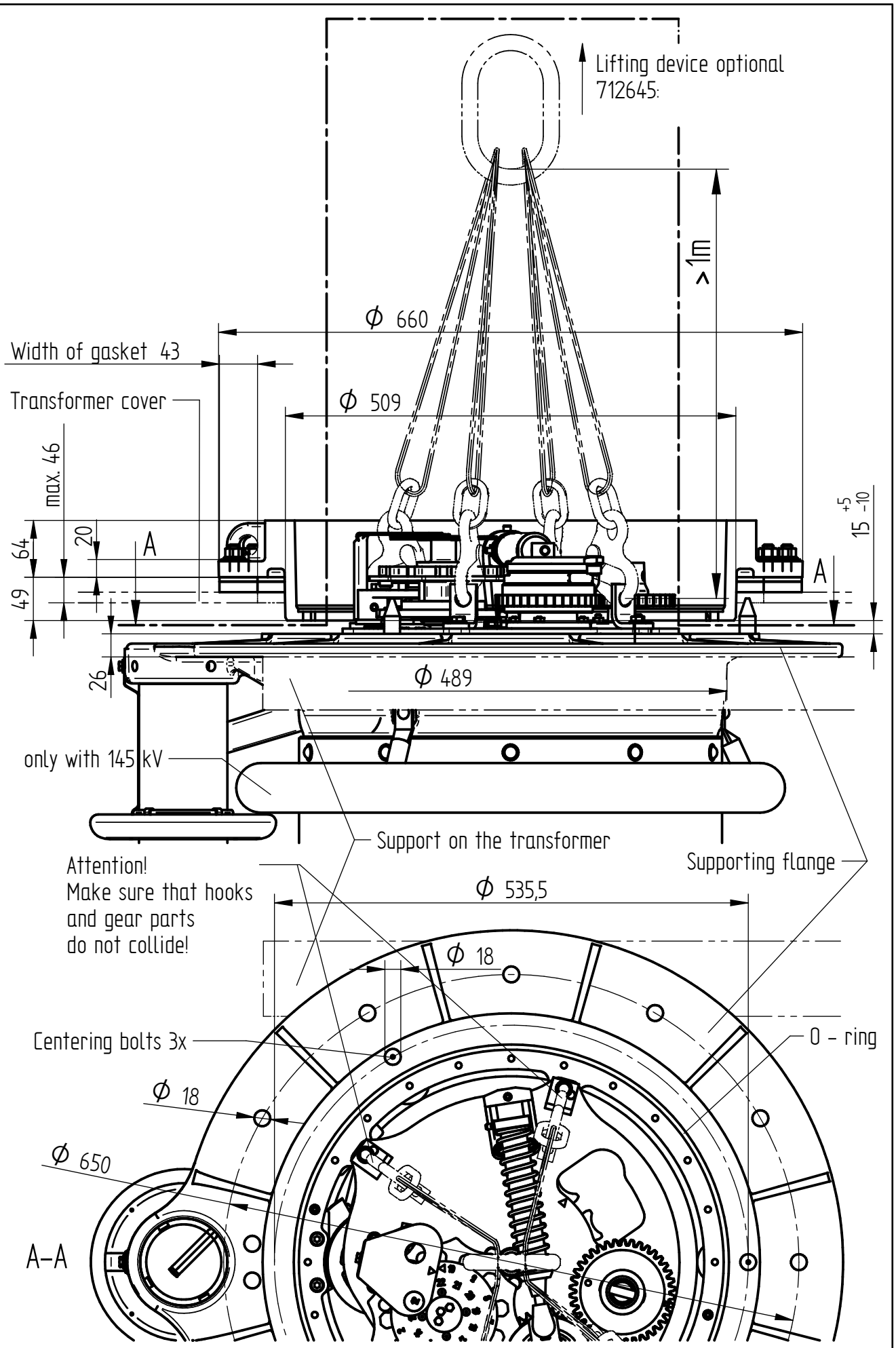




| | | | | | |
|---|---|---|---|---|---|
| 4E | 1006204 | 02.02.06 | SPL | | |
| 3E | 043849 | 18.12.02 | DC | | |
| 2E | 042782 | 21.11.02 | DC | | |
| 1E | 035102 | 05.11.01 | EN | | |
| Ae. I | Aend.-Nr: | Tag | Name | | |
| gez. Str 22.11.02 | | | | | |
| gepr. Albrecht | | | | | |

MR

On-Load Tap-Changer VACUTAP® V V
assembly drawing bell-type mounting

8991104E

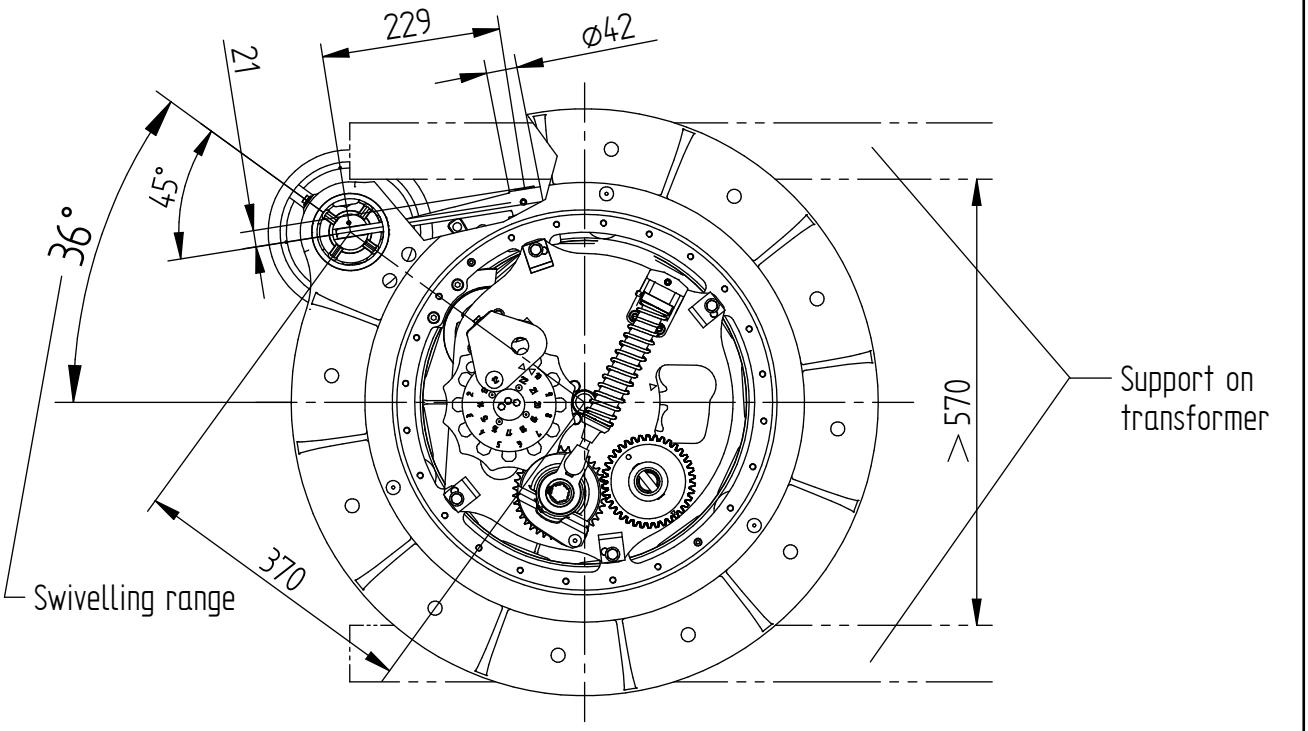


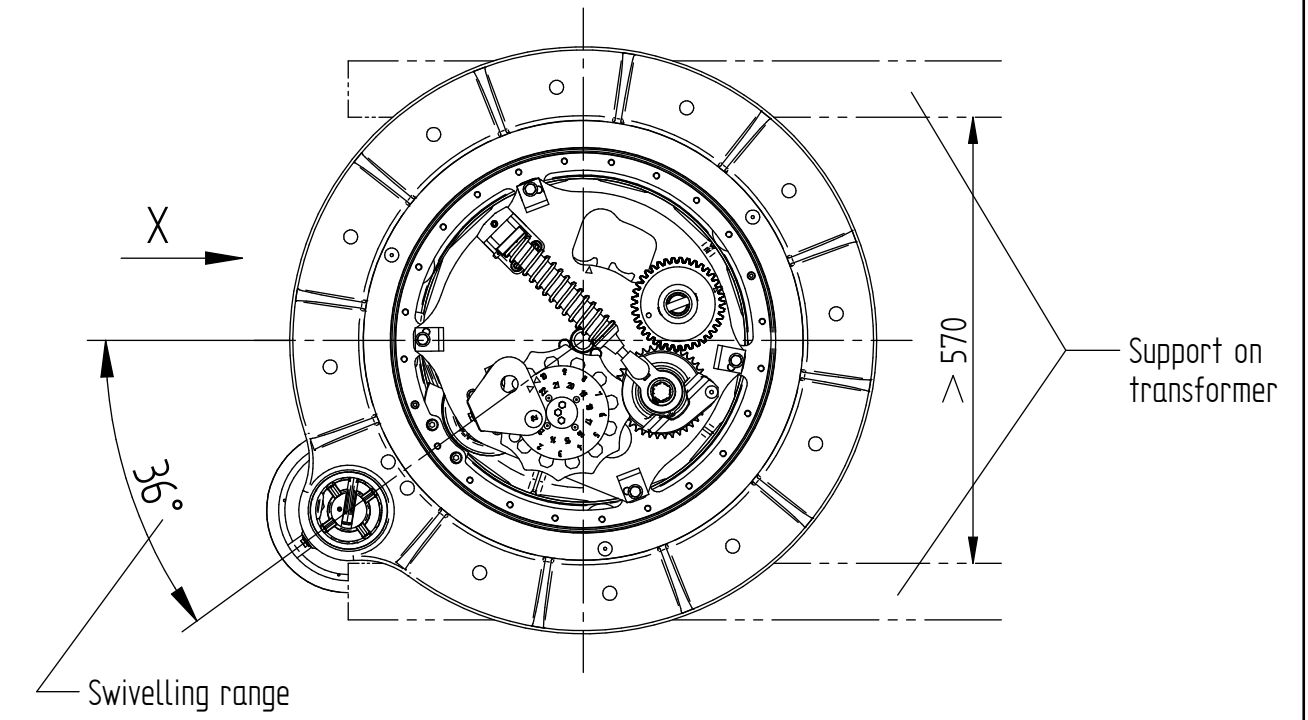


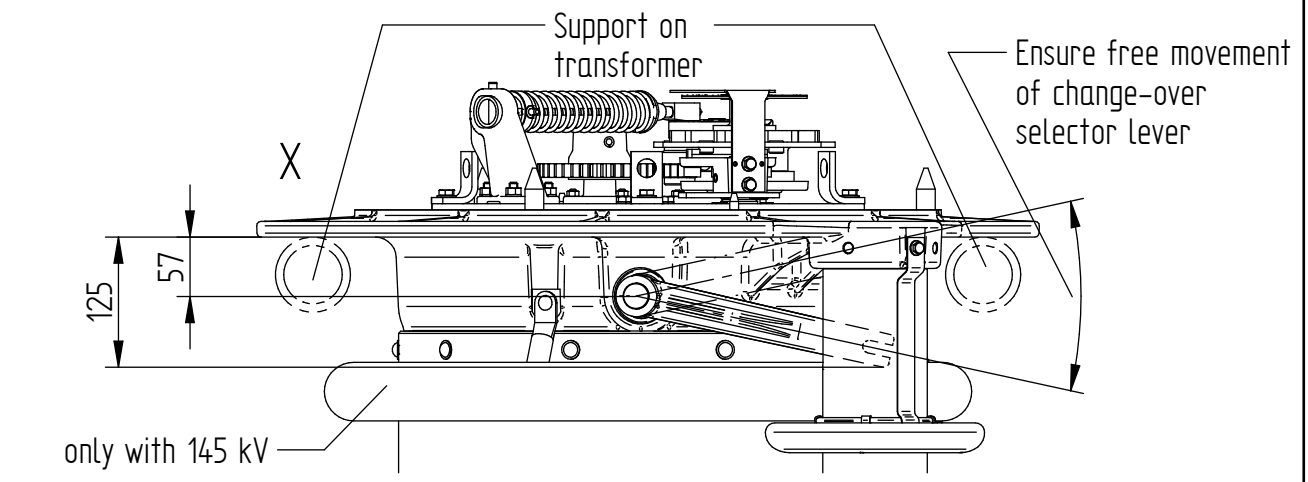




| Aend.-Nr. | Tag | Name |
|---|---|---|
| 3E | 1006.2004 | 08.02.06 | SPL |
| 2E | 043849 | 18.12.02 | DC |
| 1E | 042782 | 21.11.02 | DC |
| NEU | 037102 | 05.11.01 | EN |
| Ae. 1 | | | |

gez. DC 22.11.02
gepr. Albrecht

MR

On-Load Tap-Changer VACUTAP® V V
Positioning of OLTC for bell-type mounting

8994093E

DIN A3

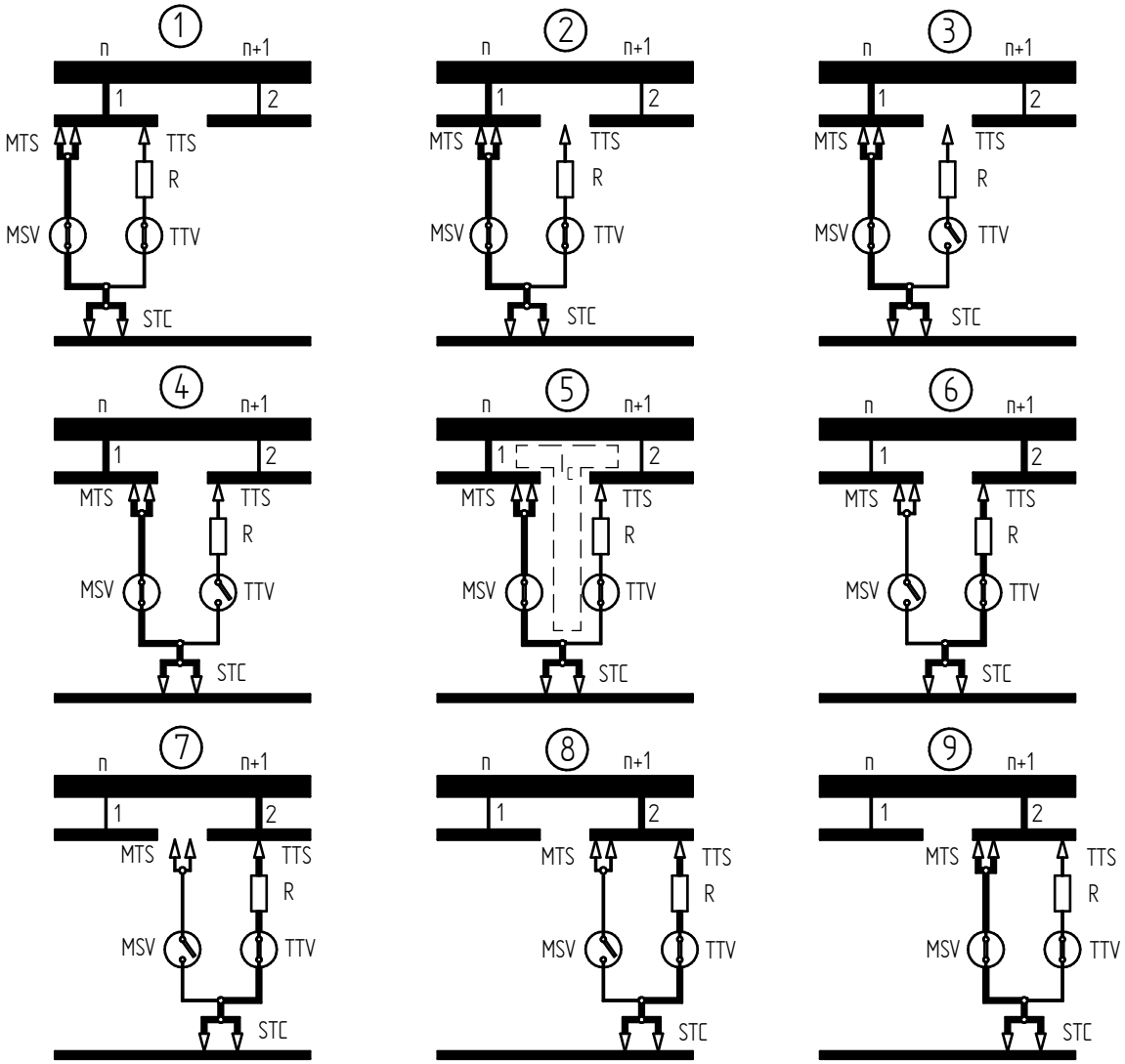


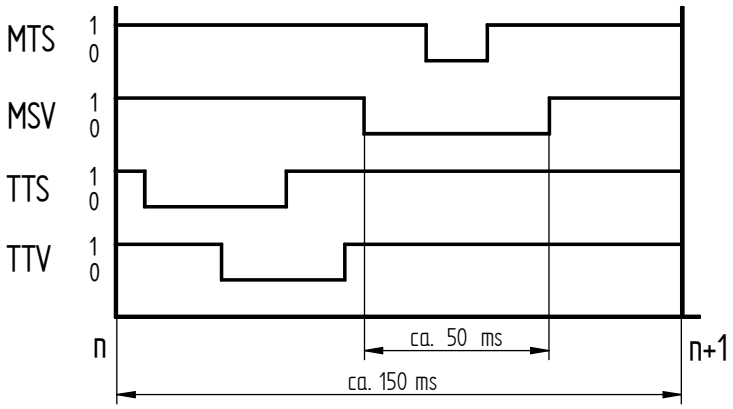


| | |
|---|---|
| MTS | Tap selector contacts, main path |
| MSV | Main switching contacts (vacuum interrupter), main path |
| TTS | Tap selector contacts, transition path |
| TTV | Transition contacts (vacuum interrupter), transition path |
| STC | Sliding take-off contacts |
| R | Transition resistor |
| $I_C$ | Circulating current |

Switching sequence, 10 pitch



| Ae. I | Aend.-Nr. | Tag | Name |
|---|---|---|---|
| 1E | 042782 | 26.11.02 | DC |
| B | 038587 | 19.02.02 | DC |
| A | 031037 | 31.10.00 | DC |
| 0E | 030476 | 26.09.00 | DC |

gez. DC 07.02.02
gepr. Albrecht

MR

On-Load Tap-Changer VACUTAP® V V
Switching operation

8990831E

## 21 Take-off terminal

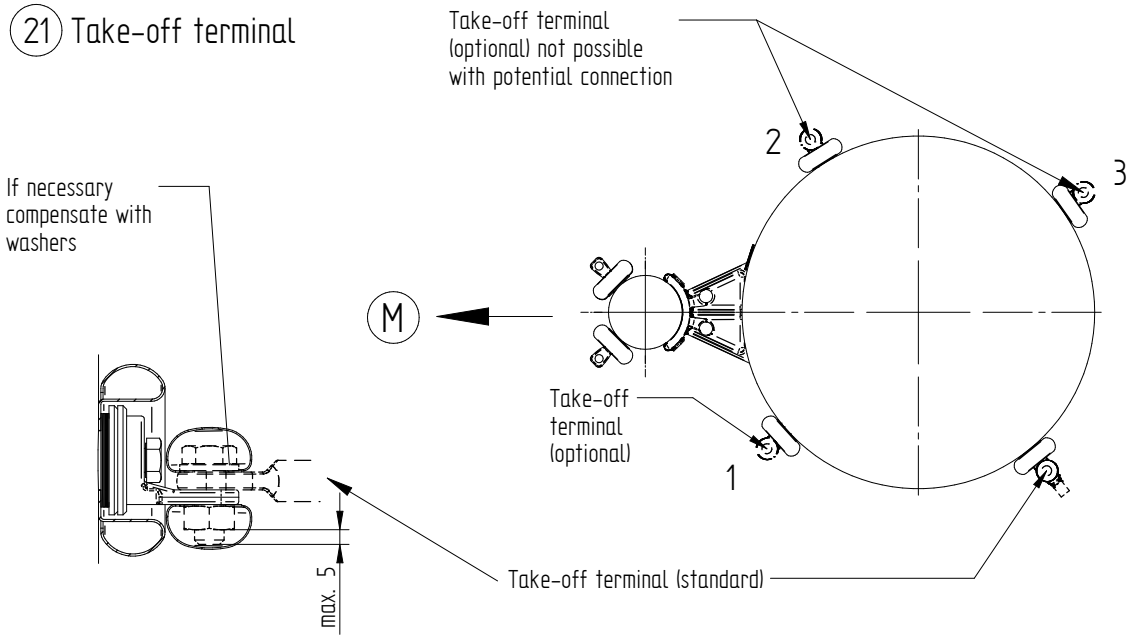


These take-off terminals (with or without take-off leads) are to be fitted with screening caps (included in MR's delivery) by the transformer manufacturer.

## 22 Fine tap selector terminal

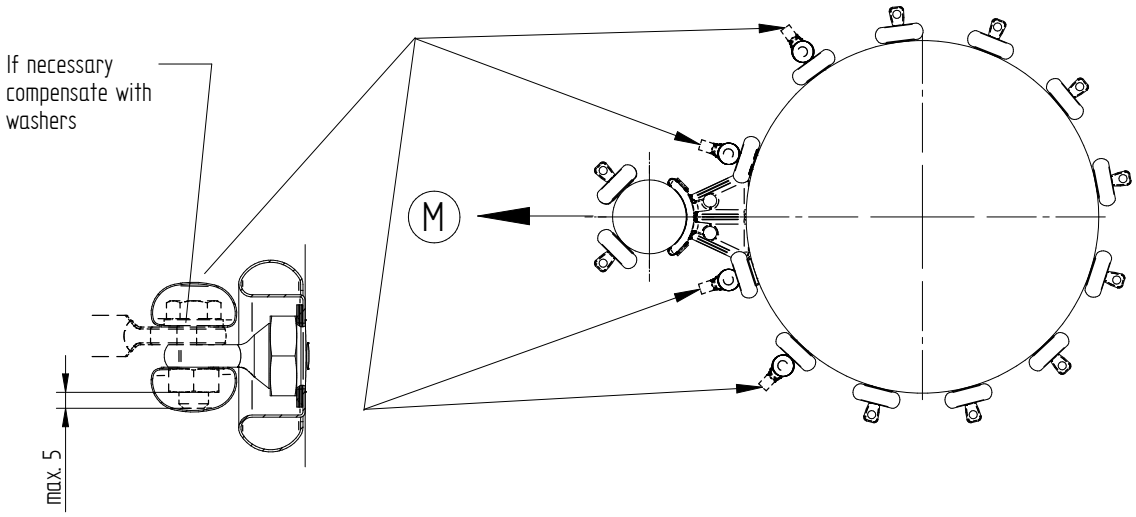


These terminals are to be fitted with screening caps (included in MR's delivery) by the transformer manufacturer.

M = Drive side

The connecting diagram is binding for the designation of the terminals and phases



| Ch. In | Change. No | Date | Name |
|---|---|---|---|
| dftr. | Str | 210109 | |
| chkd | | | |

On-Load Tap-Changer VACUTAP ® V V

Position of the connecting terminals

899051 7E

DIN A2

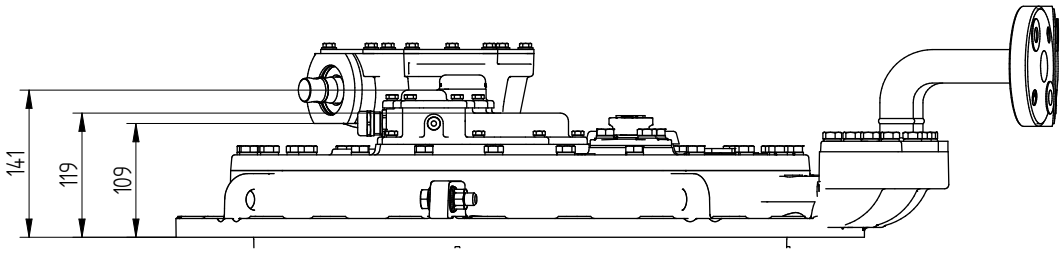


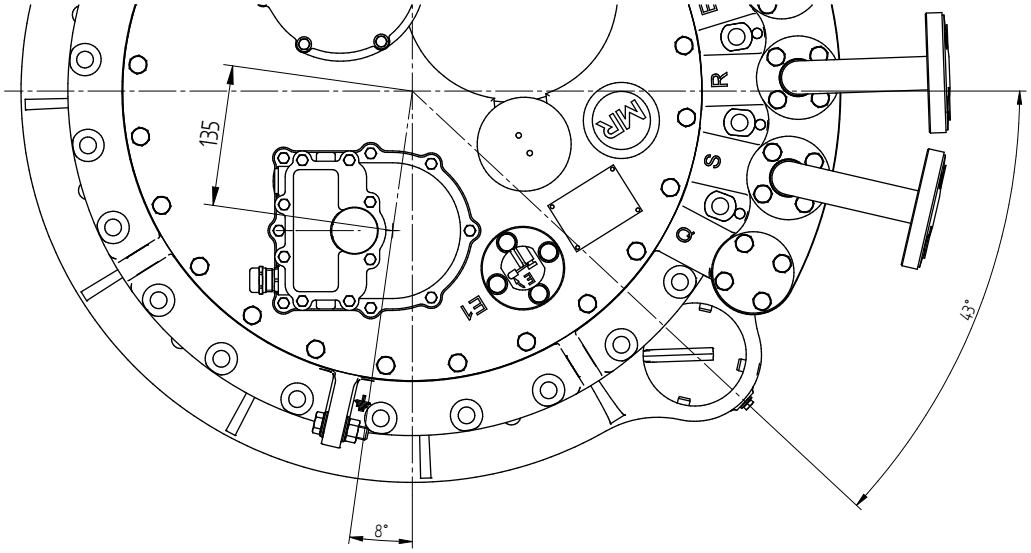


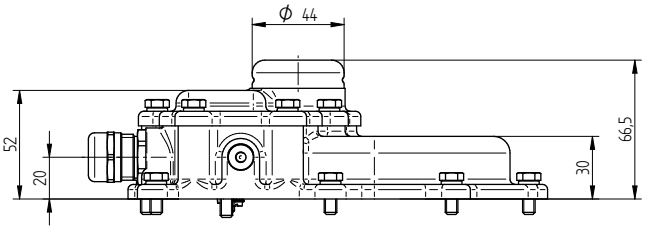


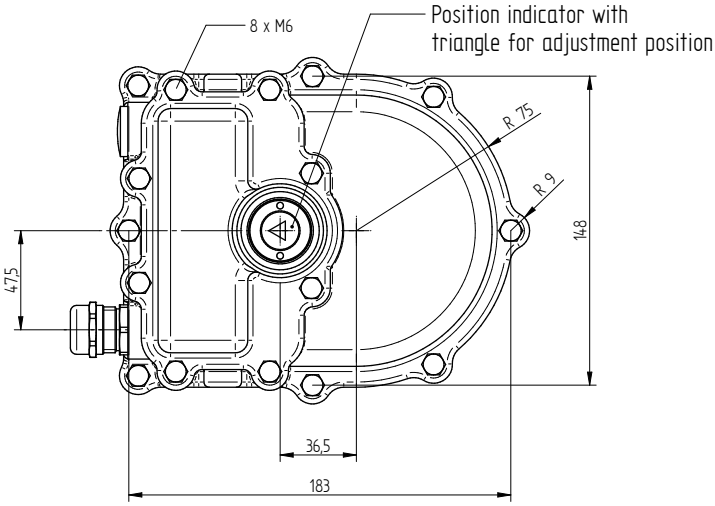


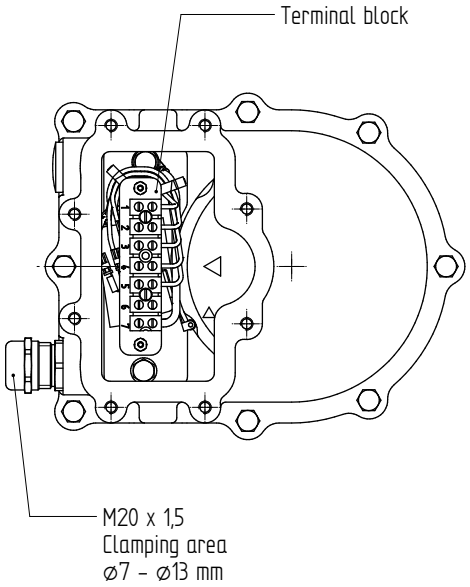


Note:
Take care when when installing the electrical lines so that they do not obstruct the OLTC cover when it is opened for maintenance.

| | | | |
|---|---|---|---|
| dfr: SPL 27.08.07 | | | |
| ctkd | | | |
| | Ch. | 10/12/21 | 27.08.07 | SPL | Name |
| | Ch. No | Change No | Date | | |

MR

On-Load Tap-Changer VACUTAP® V V

Design with tap change supervisory control

7334690E

DIN A1

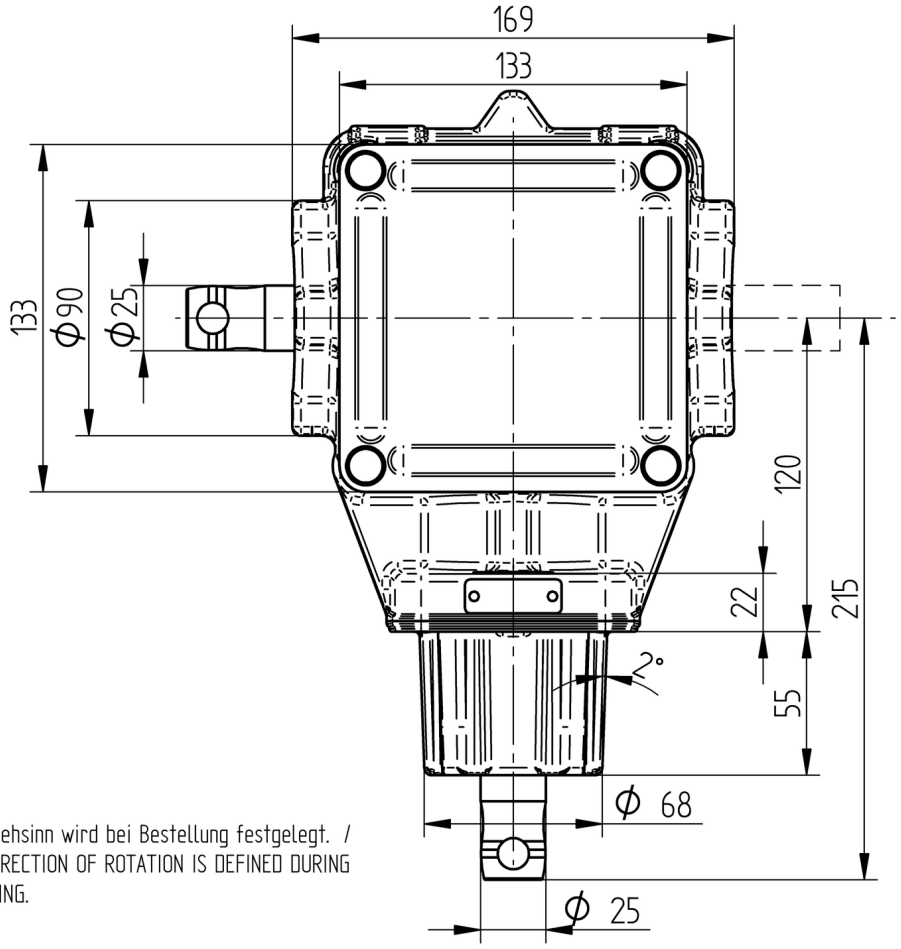


Der Drehsinn wird bei Bestellung festgelegt. /
THE DIRECTION OF ROTATION IS DEFINED DURING ORDERING.

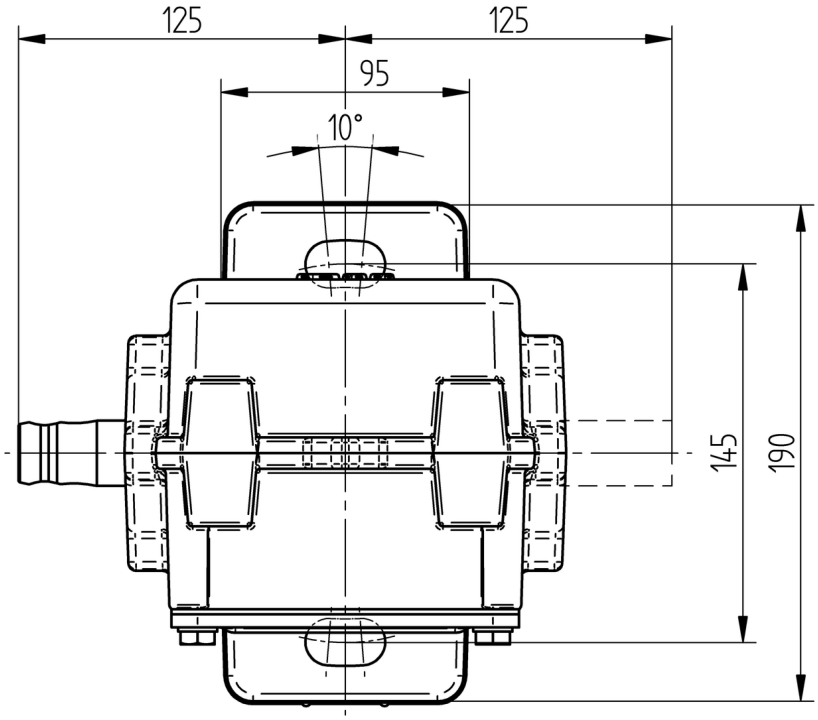




| | Datum | Name | Dokumentnummer | |
|---|---|---|---|---|
| Gez. | 01.06.2016 | BRANDL | SED 2127250 000 02 | |
| Gepr. | 01.06.2016 | HUBERTH | Änderungsnummer | Maßstab |
| Norm. | 01.06.2016 | PRODASTSCHUK | 1074942 | 1:2 |

Maßangaben in mm, soweit nicht anders angegeben

MR

Zubehör Stufenschalter
Winkeltrieb CD6400BEVEL GEAR CD6400
Maßzeichnung

Serialnummer
–

Materialnummer 8929167M

Blatt 1/ 1

A3

# Glossary

## CO
Change-Over contact

## DC
Direct current

## Dielectric strength
Material-specific property of isolators [kV/2.5 mm]; maximum electrical field strength without a breakdown (arc)

## IEC
The International Electrotechnical Commission (IEC for short) is involved in the preparation and publication of international standards for electrical, electronic and related technologies.

## IP
Ingress protection

## MR
Maschinenfabrik Reinhausen GmbH

## NC
Normally Closed contact

## NO
Normally Open contact

## NPT
National Pipe Thread (US thread standard)

**Maschinenfabrik Reinhausen GmbH**
Falkensteinstrasse 8
93059 Regensburg
Germany
+49 941 4090-0
info@reinhausen.com
**reinhausen.com**


4349322/03 EN - VACUTAP® VV® Installation and commissioning instructions -
F0335703 - 06/23


THE POWER BEHIND POWER.