www.reinhausen.com

On-Load Tap-Changer VACUTAP® AVT

Operating Instructions BA 242/05

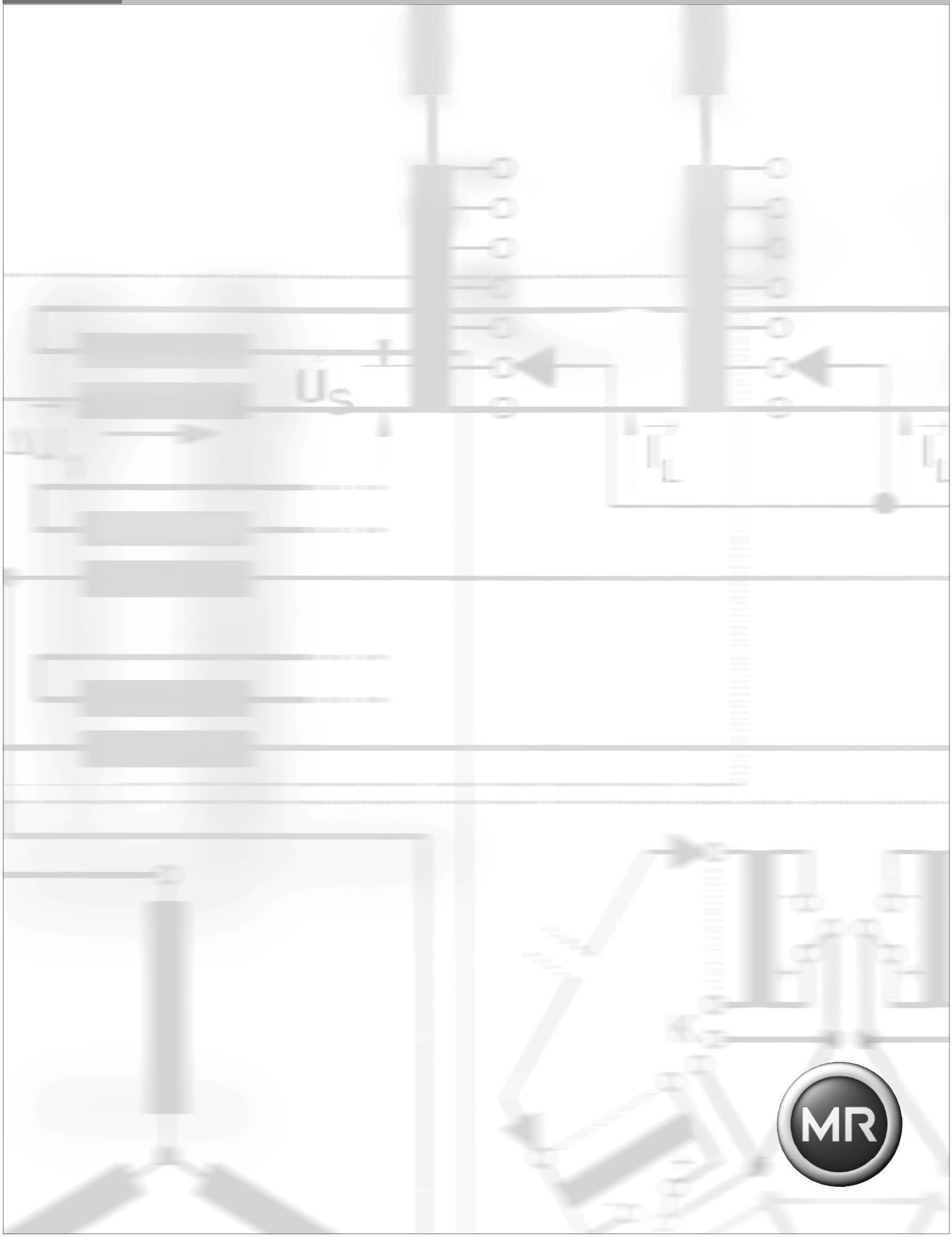

Contents

1 Safety 4

1.1 Safety labels 4
1.2 Safety instructions 4

2 Structure/Design 5

2.1 On-load tap-changer design 5
2.2 Electrical components 6
2.3 VACUTAP® AVT monitoring systems 7

3 Shipping 8

4 Transport to the operating site 9

5 OLTC function checkout at the transformer manufacturer's works 10

5.1 Checking step-by-step operation 10
5.2 Checking the motor protective switch 10
5.3 Electrical transformer tests 10

6 Installation of the OLTC 11

7 Connecting the tap winding and the OLTC connecting lead 12

8 Electrical connection of the motor drive 13

8.1 Grounding/supply connections 13
8.2 Connecting the transformer's emergency shutdown 14

9 Mechanical functionality test 15

10 Commissioning at the installation site 17

11 Operating the VACUTAP® AVT by hand crank 18

12 Monitoring during operation and faults 19

12.1 Information required when contacting MR regarding faults 19
12.2 Failure mode A: The green signaling light H1 has gone out 19
12.3 Failure mode B: The green signaling light H1 does not go out 19

13 Maintenance 20

14 Technical data 22

14.1 Technical data for the on-load tap-changer 22
14.2 General technical data 23
14.3 Technical data for the drive unit 23

15 Appendix 24

15.1 On-load tap-changer VACUTAP® AVT, dimension drawing (899019) 24
15.2 On-load tap-changer VACUTAP® AVT, dimension drawing (899109) 25
15.3 On-load tap-changer VACUTAP® AVT, circuit diagram ZM030100/Sheet 1 26
15.4 On-load tap-changer VACUTAP® AVT, circuit diagram ZM030100/Sheet 2 27
15.5 On-load tap-changer VACUTAP® AVT, motor drive components 28
15.6 On-load tap-changer VACUTAP® AVT, wiring schematics (728180) 29

NOTE!

The product may have been modified after this document went to press.
We expressly reserve the right to make changes to the technical data, the design or the scope of delivery.
In general, the information provided and the arrangements agreed during processing of the relevant offers and orders are binding.

1 Safety

1.1 Safety labels

The following safety labels relating to the operation of the VACUTAP® AVT are used in these Operating Instructions.

These labels must be observed at all times!

	DANGER! Refers to an *imminent danger* that may result in death or severe injury.
	CAUTION! Refers to a *potentially harmful situation* that may result in damage to the product or adjacent equipment.
	NOTE! Contains important information and special notes.

Special safety labels are used for certain hazards, such as electric shock:

Hazard-specific symbol, e.g.		**DANGER!** **Electric shock!** Refers to an *imminent danger through electricity* that may result in death or severe injury.

The following specific safety warnings are used in these Operating Instructions:

Risk of electric shock!	**Risk of tipping!**

1.2 Safety instructions

As the operator it is your responsibility to make sure that the on-load tap-changer is used for the specified application only. The VACUTAP® AVT on-load tap-changer may only be used with the transformer specified in the order.

For safety reasons, any unauthorized work, i.e. installation, modification, alteration of the on-load tap-changer equipment, electrical connection or commissioning of the equipment is forbidden without first consulting Jiangsu MR Manufacturing Co., Ltd.!

Otherwise, the trouble-free operation of the drive, the on-load tap-changer and the transformer may be put at risk.

- **All warnings and safety instructions must be observed at all times!**
  Failure to follow the safety instructions may lead to accidents and severe personal injury.
- **Please read these operating instructions before commissioning the equipment!**
  Please read these instructions before switching on the VACUTAP® AVT. As the operator, you are responsible for ensuring that users of the equipment have fully understood the operating and safety instructions.
- **Train your staff!**
  Before asking staff to work with the VACUTAP® AVT, provide training regarding general and special safety instructions and accident prevention regulations.
- **Only suitably qualified personnel should work with the VACUTAP® AVT!**
  VACUTAP® AVT is designed exclusively for application in electrical or energy systems and facilities operated by appropriately trained staff, i.e. staff who are familiar with the installation, assembly, commissioning and operation of such products.

2 Structure/Design

2.1 On-load tap-changer design

The on-load tap-changer type VACUTAP® AVT (see Fig. 1) for indoor installation is used to set the ratio for dry-type transformers under load.

The on-load tap-changer VACUTAP® AVT works according to the high-speed resistor-type on-load tap-changer principle. Vacuum interrupters are used as diverter switch contacts.

The drive unit of the on-load tap-changer VACUTAP® AVT is integrated into the on-load tap-changer housing (see Fig. 2). Electrical contacts prevent operation beyond the end positions.

In addition, the mechanical predetermined breaking point prevents a tap change operation beyond the regulation range.

The indicator gear mechanically indicates the tap change operation in the indication field.

DANGER!

Electric shock!
Danger of death and risk of injury!
To protect against misuse and against touching accessible, live and movable components, the VACUTAP® AVT should be installed in an enclosed environment which can only be entered by authorized personnel.
Be sure to secure the danger zone of the electrical connections and leads between the transformer and the VACUTAP® AVT rear side extensively and over a wide range.

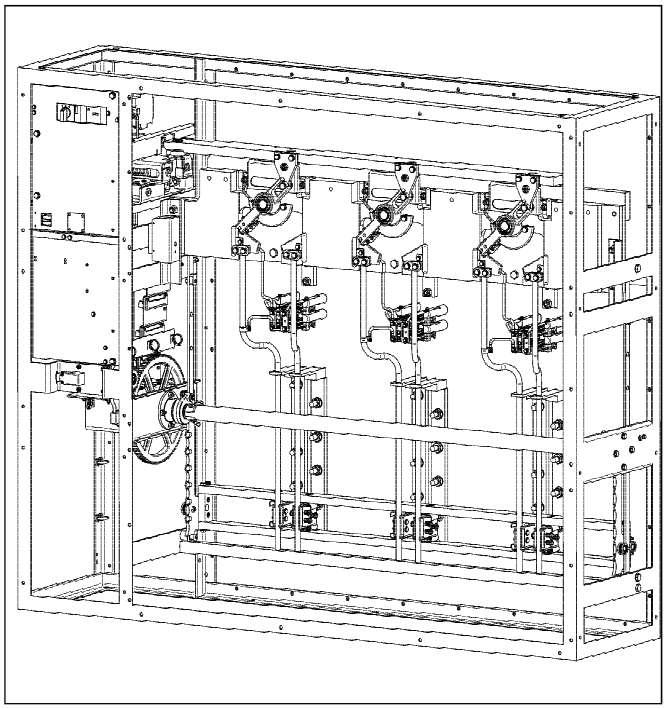

Fig. 1: On-load tap-changer VACUTAP® AVT, front view (without housing)

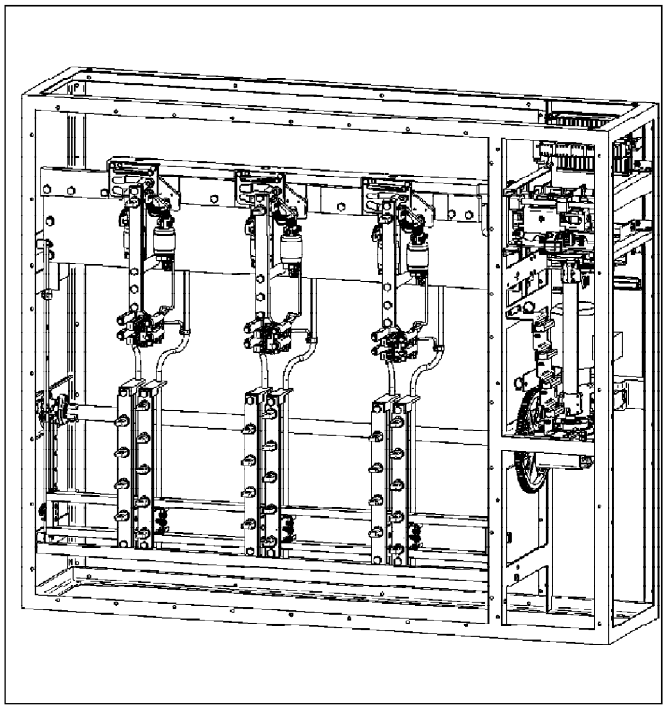

Fig. 2: On-load tap-changer VACUTAP® AVT, rear side (without housing)

2.2 Electrical components

The control elements (see Fig. 3) of the control unit are located at the front side of the VACUTAP® AVT, covered by a window.

S3:	Raise/Lower control switch
H1:	Green signal lamp
Q1A:	Trip coil of the motor protective switch
Q1:	Motor protective switch
Q1H:	Auxiliary current switch

The control unit of the VACUTAP® AVT (see Fig. 4) is hinge-mounted inside the device.

K29:	Time delay relay
K1/2:	Green signal lamp
K13/14:	Auxiliary contactor
K20:	Auxiliary contactor

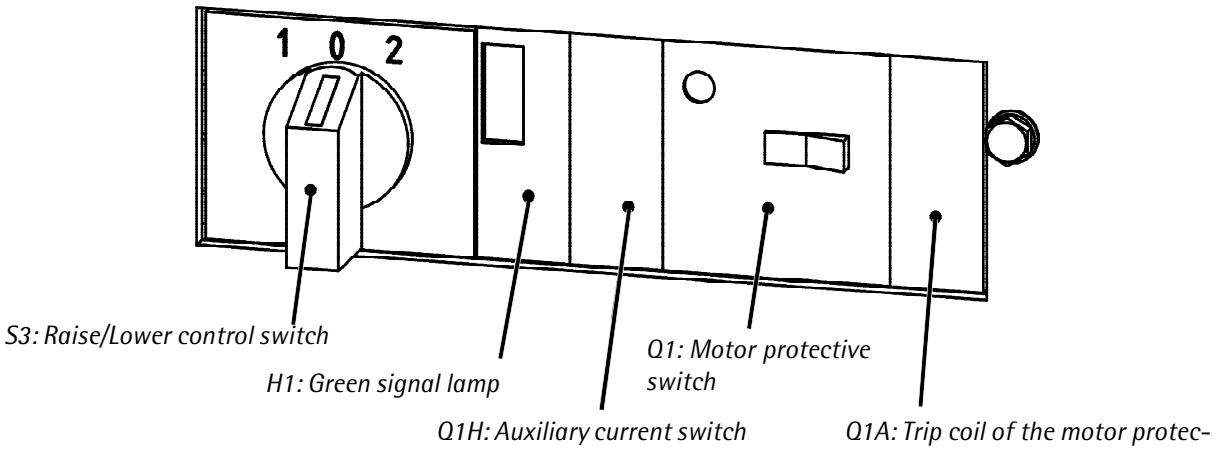

Fig. 3: VACUTAP® AVT control elements

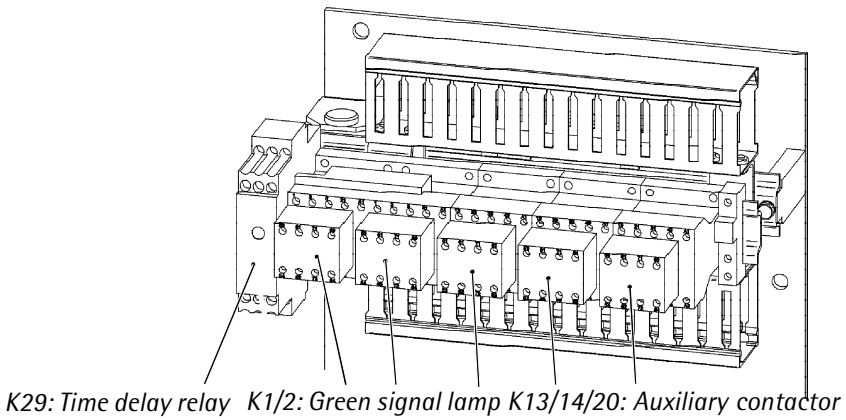

Fig. 4: VACUTAP® AVT control unit

DANGER!

Risk of personal injury and heavy material damage!
The function of the monitoring systems is at risk!
Never change the settings (preset by MR) at time delay relay K29 and motor protective switch Q1!

NOTE!

The „Green signaling light H1" shows that the monitoring systems are ready for operation.
The signaling light will go out for a short time during electrical operation.

2.3 VACUTAP® AVT monitoring systems

2.3.1 Arc monitoring

The arc monitoring system F2 (see **Fig. 5**) is mounted at the same level as the transfer switches, and is used for detecting arcs with a light sensor. Detection of an arc triggers transformer emergency shutdown and the green signaling light goes out.

DANGER!

Risk of injury or death and heavy material damage!
Monitoring system faults!
The green signal lamp H1 indicates that the VACUTAP® AVT monitoring systems in service are active.
If the lamp is not lit the transformer should be switched off immediately!

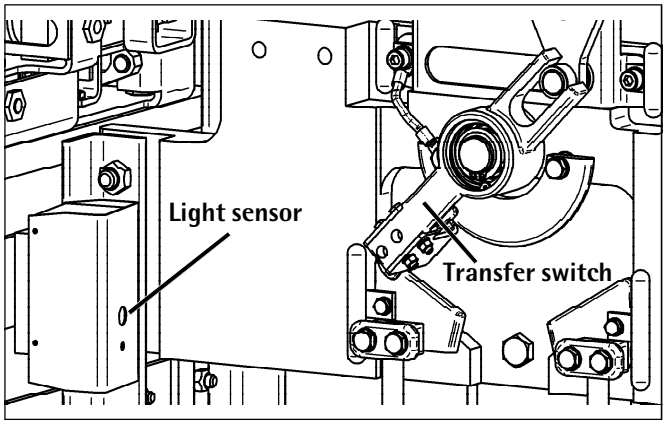

Fig. 5: Arc monitoring of the VACUTAP® AVT

2.3.2 Latch monitoring

The latch monitoring system S70/71 (see Fig. 6) is used for detecting, via sensor, non-latching of the energy accumulator. Activation of the latch monitoring system triggers transformer emergency shutdown and the green signaling light goes out.

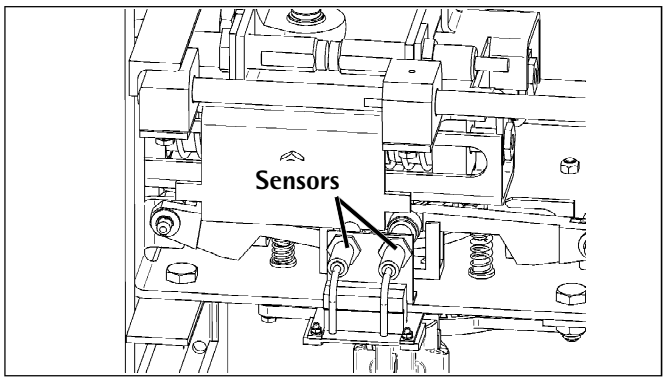

Fig. 6: Latch monitoring of the energy accumulator

Fig. 7 shows an example of a circuit diagram section containing the VACUTAP® AVT monitoring systems. An example of a complete circuit diagram can be found in the Appendix.

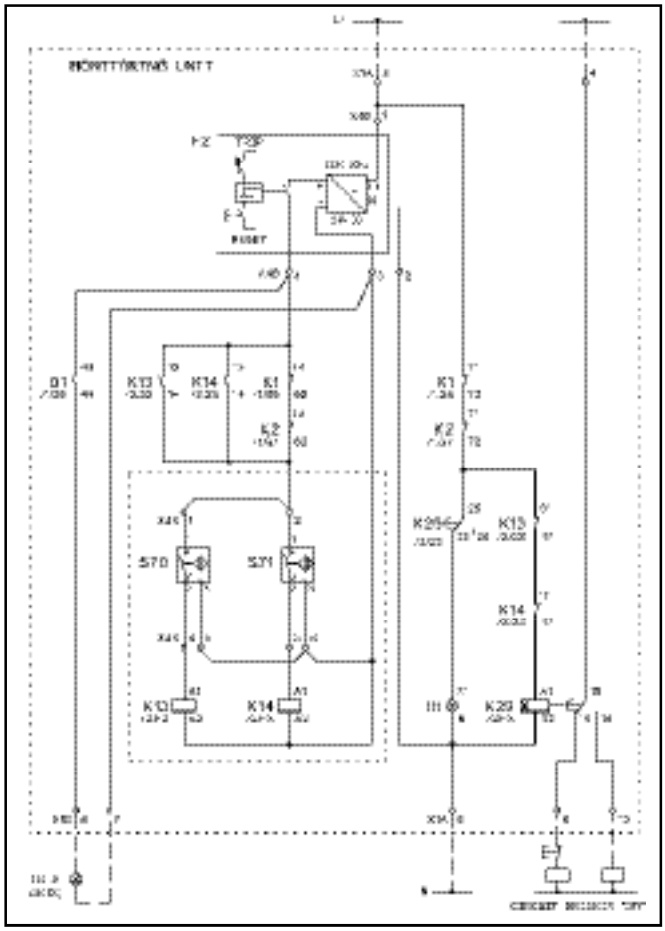

Fig. 7: Example of a circuit diagram section

DANGER!

Risk of injury or death and heavy material damage!
Monitoring system faults!
It is imperative that the transformer is switched off immediately both on the high-voltage and low-voltage side whenever the monitoring systems (arc monitoring and latch monitoring) are energized!
Otherwise the effectiveness of the monitoring systems will be compromised.

3 Shipping

The VACUTAP® AVT on-load tap-changer with integrated motor drive is shipped in the adjustment position.

Only transport the on-load tap-changer (max. 350 kg) using one of the methods below:

- using a lifting device connected to the four transport loops (internal diameter 35 mm) fixed to the housing (see Fig. 8),
- using a forklift truck to lift the equipment from underneath (see Fig. 9).

Please be sure to always use appropriate hoisting gear when lifting and transporting the on-load tap-changer. When using cranes to lift the on-load tap-changer, be sure to use only the four (4) eyelets situated atop the on-load tap-changer.

Be sure to lift the on-load tap-changer simultaneously by all four eyelets, making sure that the lifting force is distributed over all four eyelets as evenly as possible. When using forklifts to transport the VACUTAP® AVT, be sure to insert the forks centrally underneath the unit.

Tilting must be avoided at all cost!

DANGER!

Risk of tipping!
Risk of severe injuries or death!
All equipment must be supported securely when working on the on-load tap-changer, the motor drive unit or other components!
Uncontrolled tipping of the device must be prevented!

NOTE!

The consignment is to be checked for completeness based on the shipping documents
It is very important to store and transport the on-load tap-changer in the original factory packing and in a dry environment before its arrival and installation at the final destination point.

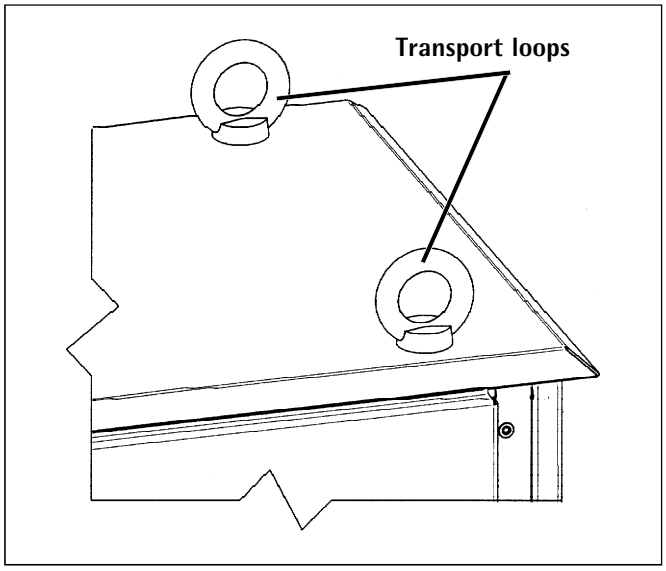

Fig. 8: Transport loops at the upper section of the VACUTAP® AVT

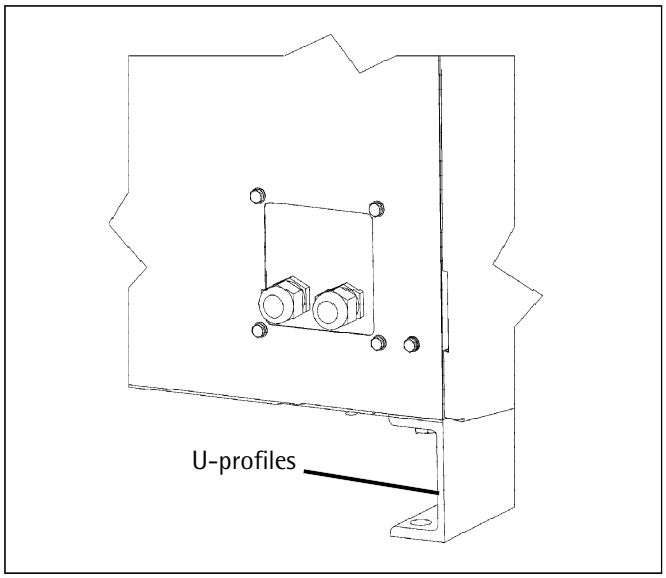

Fig. 9: U-profiles as forklift truck guides at the base of the VACUTAP® AVT

4 Transport to the operating site

Be sure to move the VACUTAP® AVT into its adjusting position (bottom end position) prior to transporting it to the operating site.

Please be sure to check the VACUTAP® AVT for visible damages upon its arrival at the operating site. Transportation damage may compromise the functions of the VACUTAP® AVT.

	NOTE!
	It is very important to store and transport the on-load tap-changer in the original factory packing and in a dry environment before its arrival and installation at the final destination point.

Furthermore, it is very important to secure the on-load tap-changer against violent shocks during transportation and installation, and to protect it from tilting and toppling over. Especially transports of longer duration require original factory packing to protect the on-load tap-changer against dirt and moisture.

	CAUTION!
	Violent shocks or toppling-over may damage the finely tuned mechanics of the on-load tap-changer and lead to malfunctions or increased wear and tear. It is therefore imperative to notify the manufacturer of any such excessive stress or any externally visible damage. It is then up to the manufacturer to decide whether the on-load tap-changer concerned will be replaced, repaired, or reinspected at the manufacturer's premises. Damage and failure caused by improper handling of the on-load tap-changer during transportation, inspection and installation will under no circumstances be covered by the manufacturer's product liability!

5 OLTC function checkout at the transformer manufacturer's works

Please be sure to check the VACUTAP® AVT for visible damage before the functional test. Transportation damage may compromise the functions of the VACUTAP® AVT. To check the on-load tap-changer's functions, please be sure - before applying voltage to the transformer - to perform operational tests involving the entire range of operations, starting from the adjusting position (bottom end position; anti-clockwise rotation of the hand crank) all the way to the top end position, and back to the adjusting position (clockwise rotation of the hand crank).

DANGER!

Danger of death!
The function checkout must be performed while there is supply voltage present at the motor-drive mechanism.
Please be sure to observe the relevant safety instructions.

5.1 Checking step-by-step operation

Press the Raise/Lower control switch S3 (see Fig. 3) to trigger a step-by-step operation in direction 9 and keep the control switch pressed during the entire operating time of the motor-drive mechanism.

- Now check to make sure that the motor-drive mechanism switches off automatically following a tap change by the on-load tap-changer. Should this not be the case, verify the connection of the control unit!
- Please perform this check for both directions of rotation of control switch S3 (Raise/Lower).

CAUTION!

On-load tap-changer damage!
Power supply:
Please check and make sure that the mains supply data are compatible with the technical data/electrical operating data of the motor-drive mechanism.
Phase sequence test:
When checking the motor circuit voltage, please make sure that the supply voltage is in compliance with the value indicated on the rating plate and has a clockwise phase sequence (see Fig. 10).
If an incorrect phase sequence is applied the drive will start up but then control will be switched off. In this case interchange the connections on terminals X1A:1 and 5 or X1A:1 and 6.

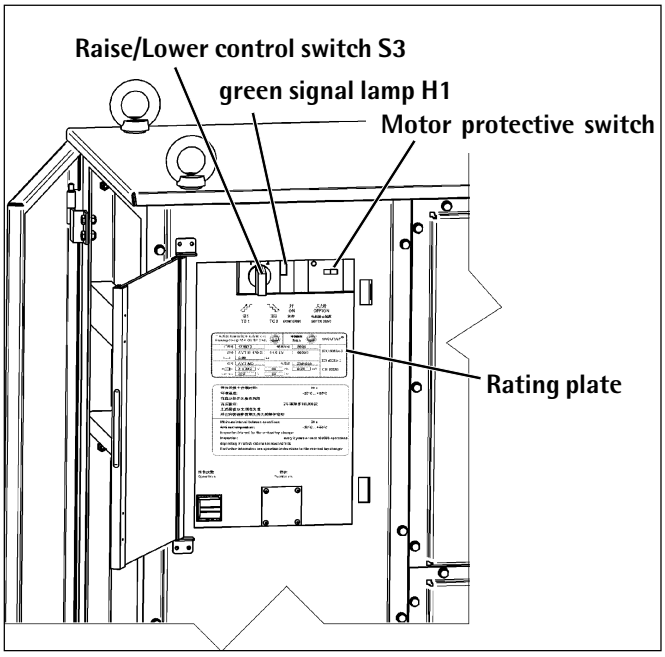

Fig. 10: Control panel

5.2 Checking the motor protective switch

Please check the tripping functions of motor protective switch Q1 (see Fig. 10) as follows:

- Please disconnect the motor protective switch from the supply and secure it.
- Connect terminal X1B:4 with terminal X1B:5.
- Reapply voltage. Motor protective switch Q1 must now be triggered immediately, closing must be impossible.
- Remove the jumper between terminals X1B:4 and X1B:5.

5.3 Electrical transformer tests

All electrical tests required for transformer acceptance can be performed after completion of the previous works.

DANGER!

Risk of injury or death and heavy material damage!
The on-load tap-changer is an essential component of the regulating transformer.
The relevant standards for transformers must be observed.

The following standards were valid at the time this documentation was prepared:

- GB 6450-86 „Dry-type power transformers"
- GB 50150-91 "Standard for handover test of electric equipment installation engineering"

6 Installation of the OLTC

Fixing the on-load tap-changer beside the transformer

Drill holes (ø 18 mm) are provided on the U-frames on the underside of the on-load tap-changer for fixing the on-load tap-changer securely before commissioning (see Appendix 899019, 899109 and Fig. 11).

Use studs M16 (max. 45 mm long) for fixing. The U-frames can be mounted on the on-load tap-changer housing so they point inwards (see Fig. 11) or outwards.

NOTE!

Before fixing the on-load tap-changer, ensure there is easy access to the tap selector connection terminals on the rear of the housing (see Fig. 11).

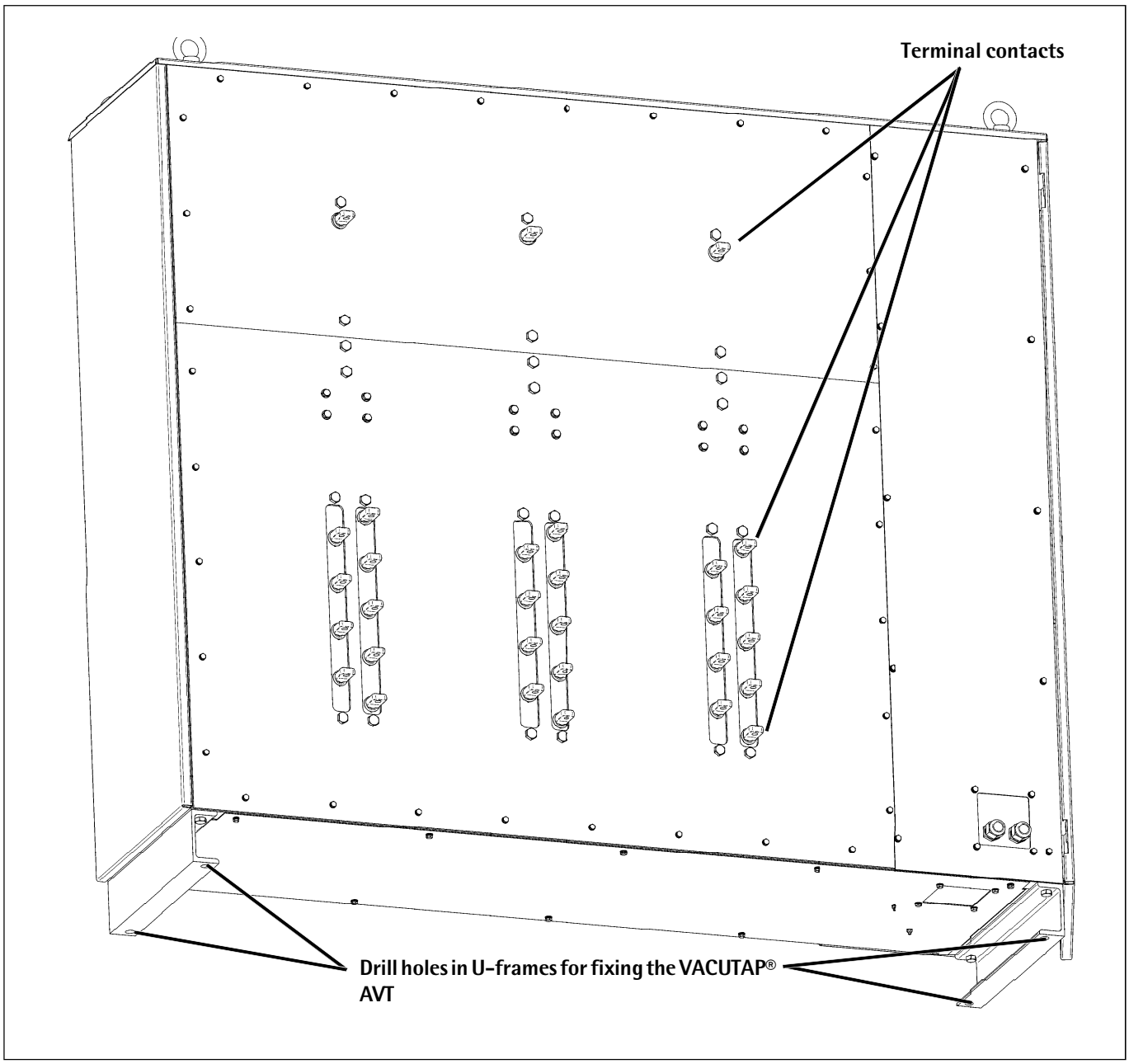

Fig. 11: On-load tap-changer VACUTAP® AVT, rear side

7 Connecting the tap winding and the OLTC connecting lead

Connect the tap winding and the on-load tap-changer connecting lead according to the connection diagram supplied with the delivery.

CAUTION!

Damage to the on-load tap-changer!
Carefully connect and secure all connections. The tap selector connecting leads must be connected to the VACUTAP® AVT without tension. If necessary, guide the ends of the leads using an extension loop.
Ensure the connecting terminals are fixed in position and cannot be forcibly twisted.

Connecting the tap selector connecting leads and the on-load tap-changer connecting leads

The tap selector connecting terminals are marked on the rear side of the housing (see Fig. 12, illustration is only an example). The maximum tightening torque for an M10 screw connection is 40 Nm.

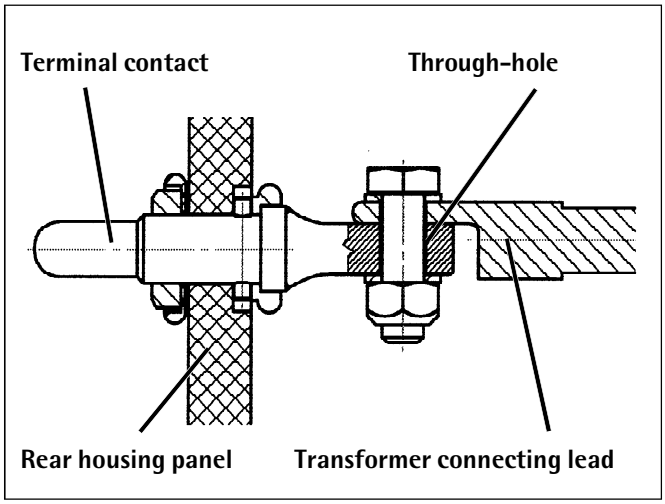

Fig. 12: Connecting the terminal contact with the transformer connecting lead

The terminals are flat at the connection end and have a through hole (ø 11 mm) so the tap selector connecting leads can be connected using cable sockets (see Fig. 13).

Use screws M10 (max. 35 mm long) for the connection. Ensure the screws are properly tightened.

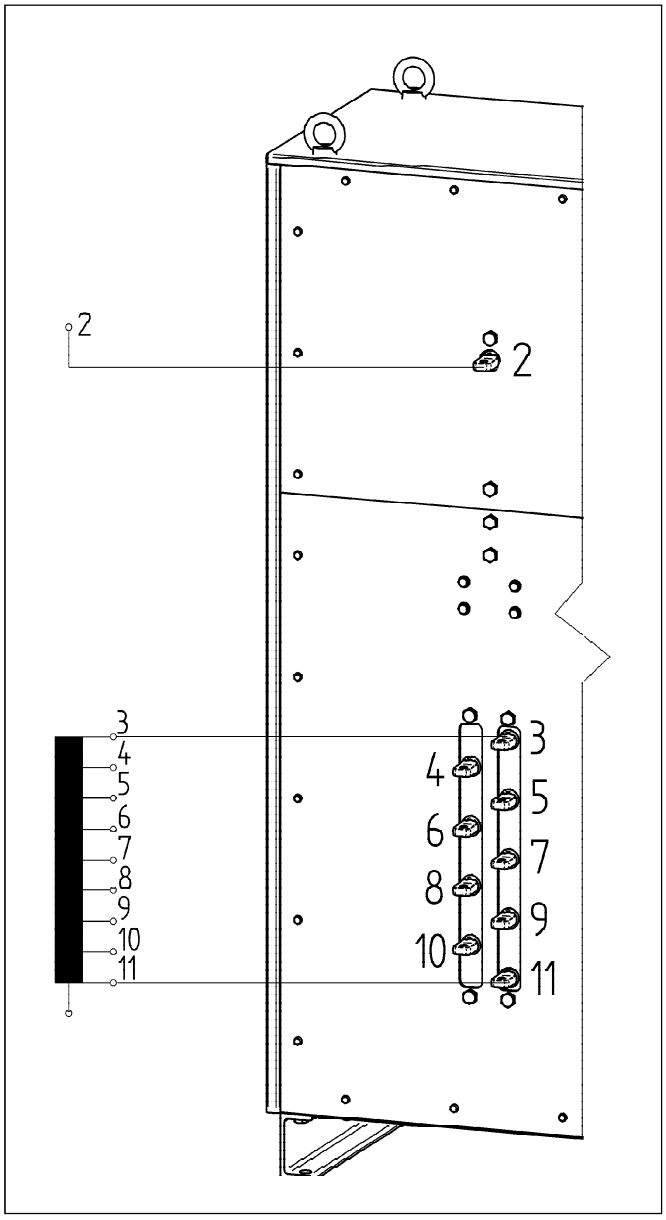

Fig. 13: Terminal contacts

8 Electrical connection of the motor drive

8.1 Grounding/supply connections

DANGER!

Danger of death!
When carrying out the electrical connection of the motor drive ensure that the relevant safety regulations are adhered to.

CAUTION!

Damage to the on-load tap-changer!
Please make sure that the motor-drive mechanism is duly supplied with the voltage indicated on the rating plate (see Fig. 10).

Connect the mains supply of the motor drive according to the connection diagram in the accompanying documentation.

PG cable glands are provided on the rear side (Fig. 14, no.1) or optionally on the underside (see Fig. 14, no. 2) of the motor drive for this. The connecting leads are guided through these cable glands to the on-load tap-changer housing interior.

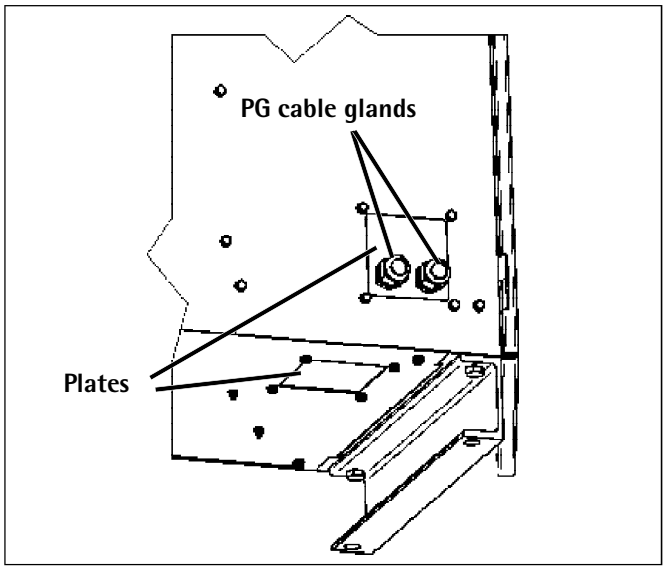

Fig. 14: Plates with through-hole and PG cable gland

Fix the leads with the cable ties provided on the attachment elements on the inside of the housing. To earth the on-load tap-changer properly, connect the on-load tap-changer ground screws (M10) to the transformer (see Fig. 15).

DANGER!

Risk of injury or death and heavy material damage!
Please make sure that an appropriate ground connection was established between the on-load tap-changer and the transformer via the on-load tap-changer ground screws (M 10) (see Fig. 15).

To ensure proper grounding the cross-sectional conductor area must be equal or greater than that of the transformer's ground connection.

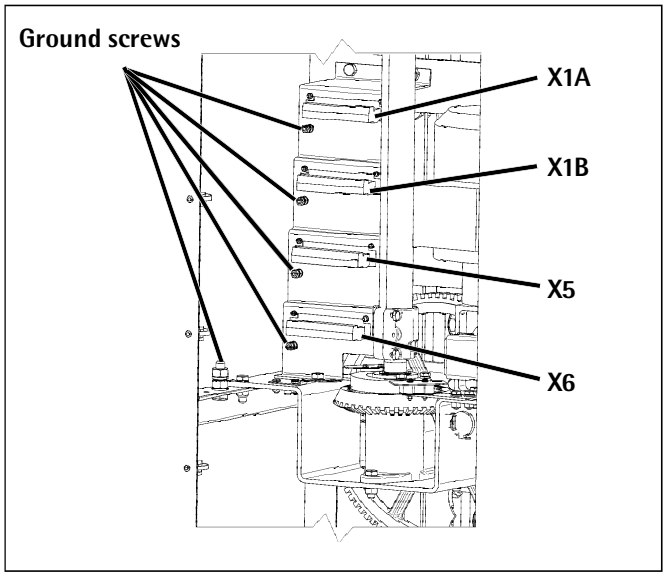

Fig. 15: Ground screws and terminal strips

Feed the connecting leads from the PG cable glands to the terminal strips in the housing interior. Fig. 16 shows an example of a terminal strip assignment. The specific terminal strip assignment for your VACUTAP® AVT on-load tap-changer be found the circuit diagram in the VACUTAP® AVT documentation.

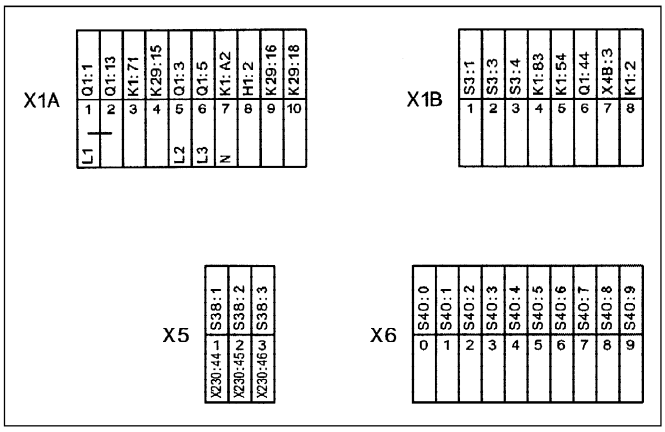

Fig. 16: Example for terminal strip assignment

8.2 Connecting the transformer's emergency shut-down

DANGER!

Risk of personal injury and heavy material damage!
Effectiveness of the monitoring systems may be compromised!
It is imperative for the transformer to be switched off immediately both on the high-voltage and low-voltage side whenever the monitoring systems (arc monitoring and latch monitoring) are energized.

All connections must be established in accordance with the connection diagram enclosed with the VACUTAP® AVT (example shown in Fig. 17).

The switchgear control which serves to disconnect the transformer from the distribution system on the high-voltage and low-voltage sides if the VACUTAP® AVT monitoring systems are triggered must be connected to terminal X1A:4 and X1A:9 or X1A:10 (Fig. 17).

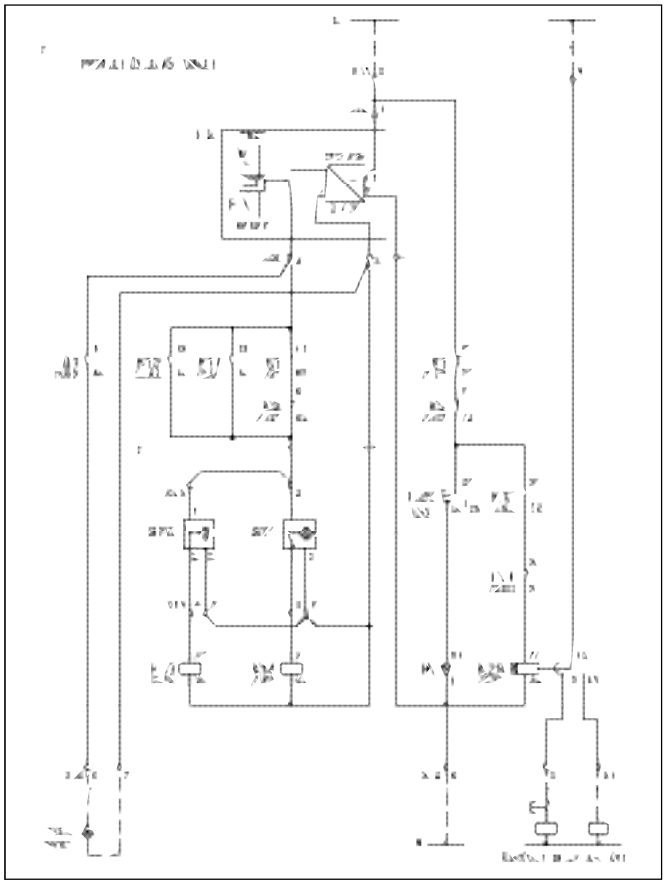

Fig. 17: Example of a circuit diagram section

9 Mechanical functionality test

Before commissioning the transformer, carry out a mechanical functionality test. This test must be performed from the lower end position (anti-clockwise rotation of the hand crank) through to the upper end position and back again (clockwise rotation of the hand crank).

Use the hand crank attached to the base of the housing to operate the on-load tap-changer.

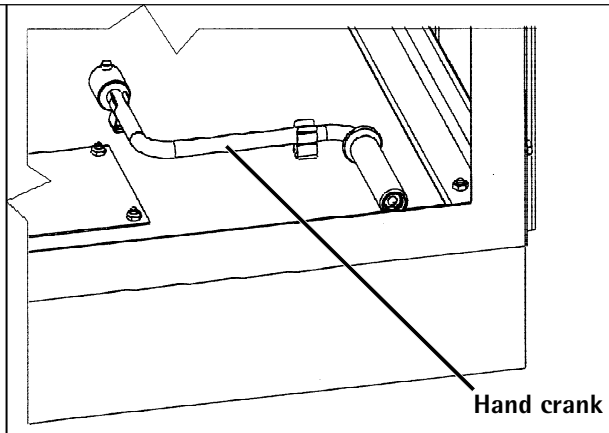

Fig. 18: Hand crank

Remove the cover of the drive shaft end (3 screws M6/w.s.10) and attach the hand crank. A single tap-change occurs after half a rotation of the large bevel wheel. Note the markings on this wheel. Make sure that the indicator is at 0° after a tap-change operation is complete. If it is not at 0°, the tap-change operation has not yet been completed properly.
Five rotations of the hand crank are required for each step. The tap-change operation of the diverter switch is clearly audible.

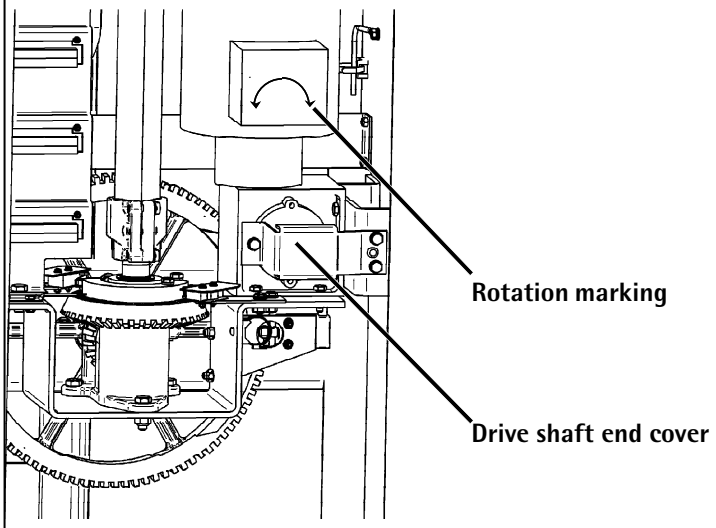

Fig. 19a: Drive shaft end cover

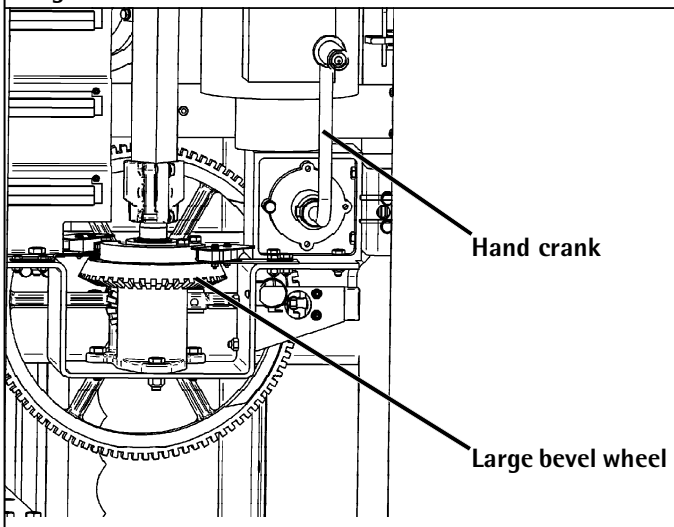

Fig. 19b: Bevel wheel and hand crank

The end positions may not be exceeded under any circumstances.
Therefore, always check the attained operating position through the inspection window on the on-load tap-changer and the rotation marking on the gear motor.

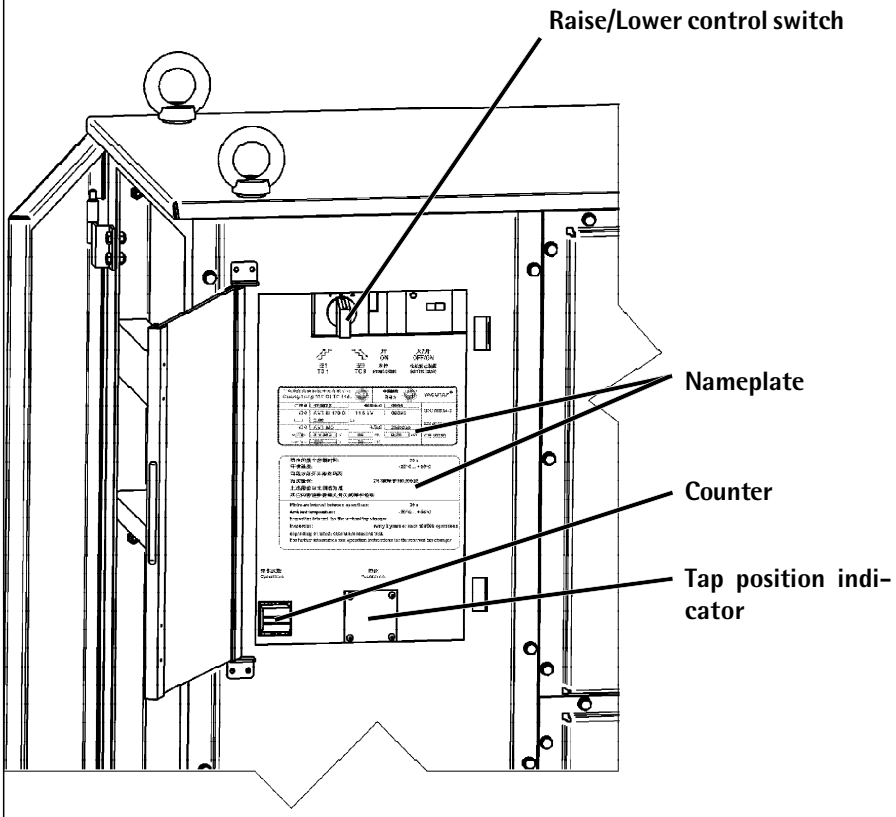

Fig. 20: Control panel

Once the mechanical functionality test has been completed, the on-load tap-changer must be moved back to the adjustment position (lower end position).

10 Commissioning at the installation site

Before commissioning the transformer, a functionality test must be carried out on the on-load tap-changer and the motor drive as described in Sections 5 and 9.

DANGER!

Danger of death!
Do not commission the transformer until the functional tests described in section 5 and 9 have been completed!

The door to the VACUTAP® AVT motor drive mechanism must be kept shut during operation. The door must only be opened by authorized staff.

The window of the control unit must be kept shut during automatic operation (see Fig. 21).

DANGER!

Risk of tipping!
Risk of severe injuries or death!
When carrying out any work on the on-load tap-changer, ensure it is positioned securely!
Uncontrolled tipping must be prevented!

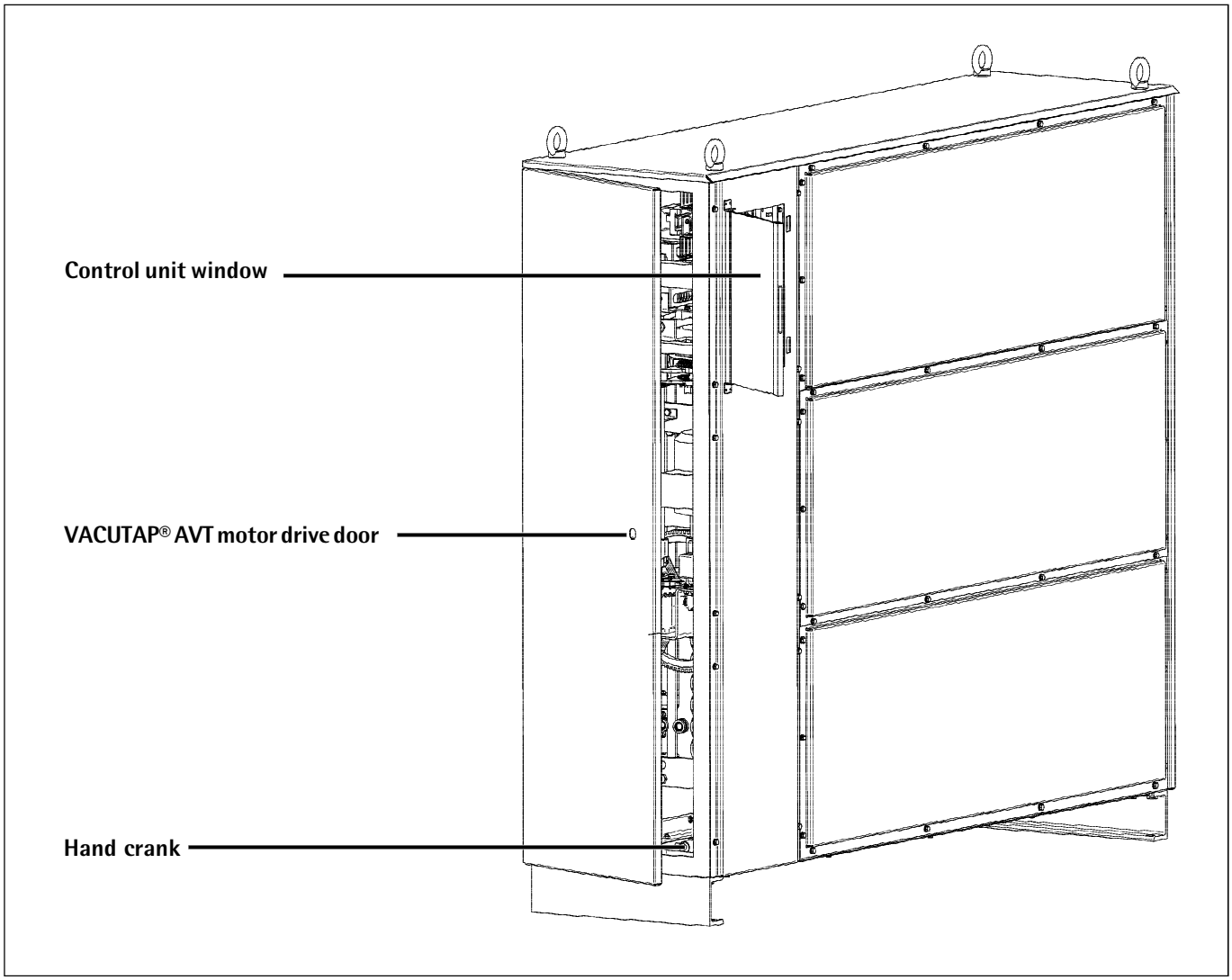

Fig. 21: VACUTAP® motor drive door and control panel window

11 Operating the VACUTAP® AVT by hand crank

Recommendation: Please keep the transformer de-energized on the high-voltage and low-voltage sides when operating the VACUTAP® AVT by hand crank.

The following conditions must met if VACUTAP® AVT operation by hand crank under load is required:

- Switch off motor protective switch!
- Ensure that the green indicator light is switched on!
- Verify that the VACUTAP® AVT connected such that the transformer is immediately disconnected from the supply on the high-voltage and low-voltage sides whenever the VACUTAP® AVT monitoring system is energized (see Section 2.3 and 8.2)!
- Ensure that the transformer is disconnected from the supply of the VACUTAP® AVT monitoring systems are energized!

VACUTAP® AVT operation under load by hand crank as described in Section 9 is admissible if the required safety clearances are observed. Prior to electrical commissioning of the VACUTAP® AVT and following maintenance work, please be sure to perform operational tests involving the entire range of operations, starting from the adjustment position (bottom end position) all the way to the top limit position, and back to the adjustment position.

DANGER!

Risk of personal injury and heavy material damage!
The transformer may only be reconnected to the supply once all faults have been rectified are and the green indicator light is on.

12 Monitoring during operation and faults

12.1 Information required when contacting MR regarding faults

The following information is required when contacting MR regarding faults

- On-load tap-changer number (see nameplate on the control panel, Fig. 20)
- Operation counter reading (see control panel in Fig. 20)
- Operating position (see control panel in Fig. 20)
- Date
- State of green indicator light H1 (on/off)
- Other information identified by the user

12.2 Failure mode A: The green signaling light H1 has gone out

- Please check whether supply voltage is available at the VACUTAP® AVT monitoring system.
- If yes: The VACUTAP® AVT monitoring system has detected a fault.
- If not: Please apply supply voltage at the VACUTAP® AVT monitoring system according to the circuit diagram.
- If the green signaling light comes on, please perform operational tests as outlined in Section 11.
- The transformer must not be connected to the supply until the green indicator light has come on!

DANGER!

Danger of death!
It is imperative for the user/transformer manufacturer to ensure that the transformer will be switched off immediately both on the high-voltage and low-voltage side whenever the monitoring systems (arc monitoring and latch monitoring) are energized.

Please contact your MR representative, the transformer manufacturer, or:

Jiangsu MR Manufacturing Co., Ltd.
No. 1 Xia Sheng Road, Suzhou Industrial Park Suzhou,
Jiangsu Province, P.R.C.PC: 215126
Phone: (+86) 512- 8555 6100, Fax: (+86) 512- 8555 6195,
mr-sales@cn.reinhausen.com

12.3 Failure mode B: The green signaling light H1 does not go out

- **Please close the motor protective switch.**
  If this is not possible a fault has occurred in the control system. In the event of on-load tap-changer faults (tripping of the motor protective switch) that cannot be rectified on site, please contact your MR representative, the transformer manufacturer, or Jiangsu MR Manufacturing Co., Ltd. direct.
- **Please perform operational tests with the motor protective switch closed.**
  If necessary, with the loads disconnected move from the adjusting position (bottom end position) to the top end position and back to the adjusting position by operating the Raise/Lower control switch S3.

13 Maintenance

Service, cleaning and lubrication

It is imperative to clean and lubricate the on-load tap-changer every 2 years or every 100,000 tap-change operations, whichever comes first.

DANGER!

Danger of death!
Strictly ensure that the following tasks are correctly carried out on the transformer and on-load tap-changer before working at the VACUTAP® AVT:

- Safely disconnect the VACUTAP® AVT on the HV and LV side!
- Ensure that it cannot be reenergized!
- Ensure no voltage is present!
- Ground and short-circuit the device in a clearly visible manner!
- The working area must be closed

Carefully carry out this work according to the lubrication diagram.

The lubricating points and insulation distances should be cleaned with a dry cloth.

NOTE!

Inspections on the on-load tap-changer should be carried out according to the instructions in order to maintain a high level of operating safety.

The first service (after 2 years or 100,000 tap-change operations) is to be carried out by the Technical Service department of MR or of MR's subsidiary Jiangsu MR Manufacturing Co., Ltd.

Provided all relevant preparations have been carried out, further inspections can usually be carried out within one day by qualified personnel or personnel trained by MR.

We always recommend that inspections be performed by the Technical Service department of our subsidiary Jiangsu MR Manufacturing Co., Ltd. This ensures that the inspection is carried out by an expert and that individual components are retrofitted to the latest manufacturing standard.

A relevant report supplementing Jiangsu MR Manufacturing Co., Ltd.'s maintenance file must be prepared.

The on-load tap-changer must be replaced after 500,000 tap-change operations.

On-load tap-changer type VACUTAP® AVT: cleaning, visual inspections and lubrication

The following components must be lubricated after 2 years or 100,000 tap-change operations, whichever comes first:

- Toothed wheels
- Silver-plated contacts and connecting leads (see Fig. 22, 23)
- Tap selector step-by-step gear (see Fig. 24)
- Rollers, coupling bearings, locking mechanism (see Fig. 25)
- Link guides on the energy accumulator and on the vacuum-interrupter control (see Fig. 26)
- Position transmitter (see Fig. 27)

Lubrication diagram

Lubricant: ISOFLEX TOPAS NCA 5051, MR item no. 09947300

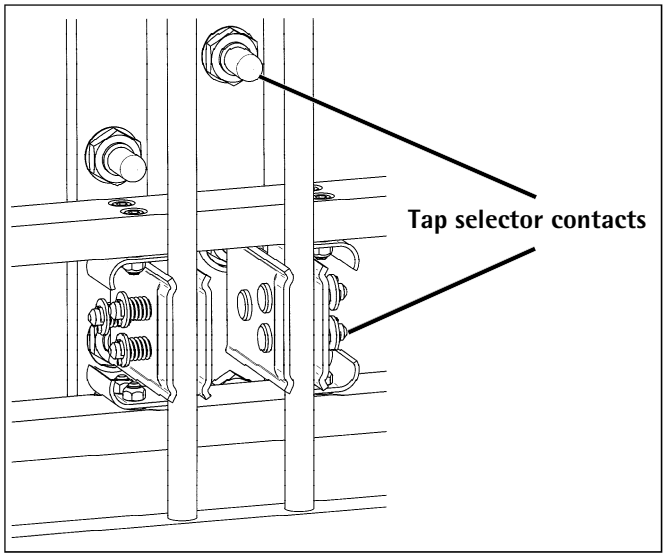

Fig. 22: Tap selector contacts

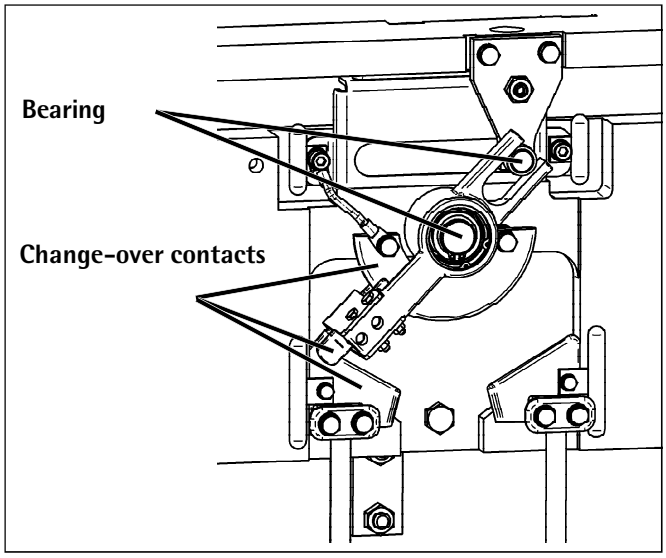

Fig. 23: Change-over contacts

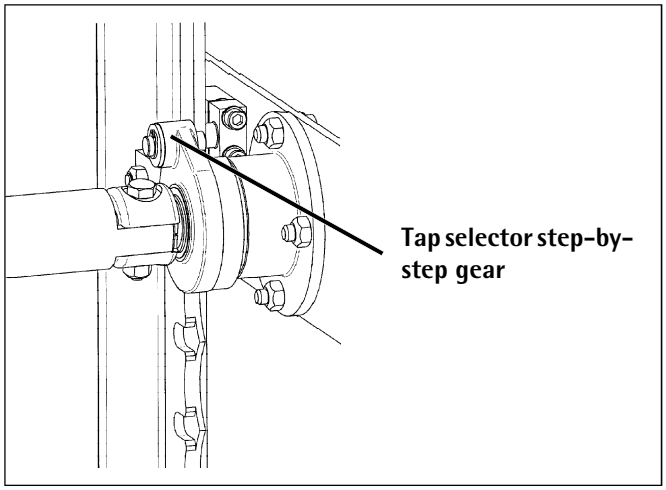

Fig. 24: Tap selector step-by-step gear

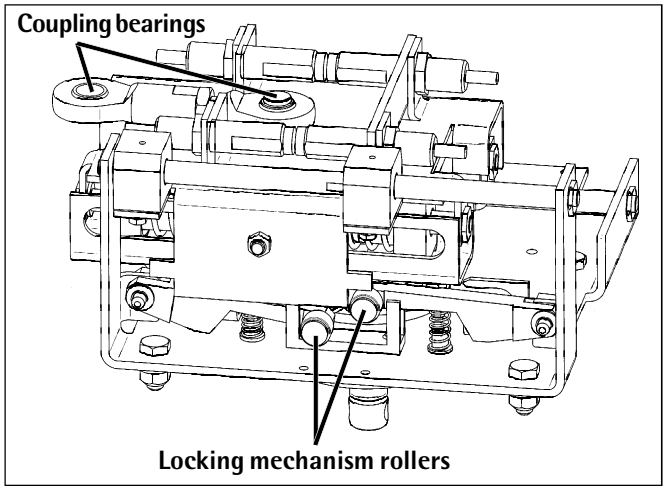

Fig. 25: Energy accumulator

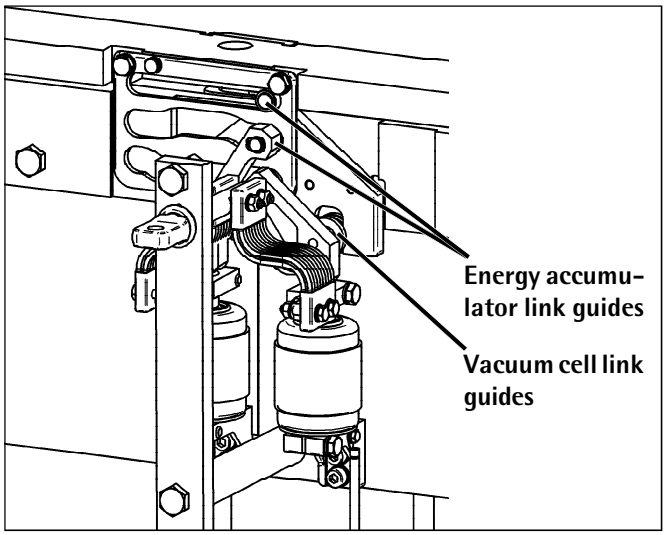

Fig. 26: Vacuum cell link guides

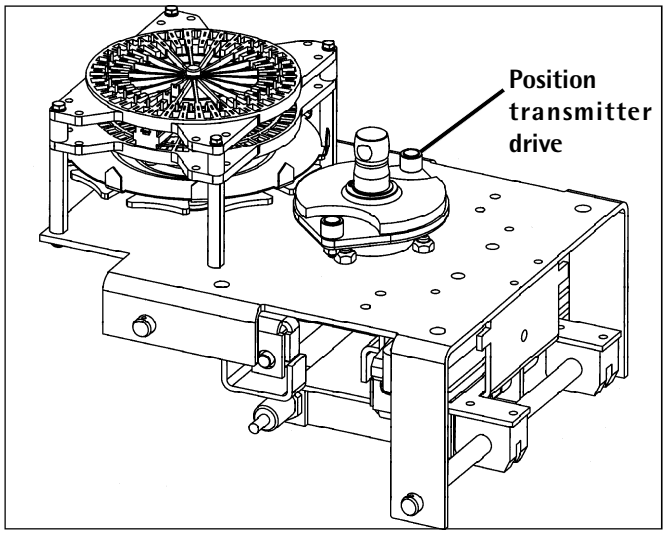

Fig. 27: Position transmitter drive

14 Technical data

14.1 Technical data for the on-load tap-changer

Number of phases	3
Max. rated through-current I_{um} per phase (A)	170
Rated short-time withstand current (kA)	4
Rated duration of short-circuits (s)	2
Rated peak withstand current (kA)	7.5
Rated step voltage U_{im} (V)	500
Rated frequency (Hz)	50 to 60
Number of operating positions	9
Tap-change operation	max. of every 30 seconds
Temperature range (ambient temperature)	–20 °C...+ 65 °C
Insulation to ground (f) and phase/phase (b) Highest voltage for equipment U_m (kV)	12
Rated lightning impulse withstand voltage (f+b) (kV, 1.2/50 ms)	75
Rated short-duration power-frequency withstand voltage (f+b) (kV)	35
Internal insulation Rated impulse withstand voltage over 1 tap (a0, a1) (kV)	10
Rated short-duration power-frequency withstand voltage over 1 tap (a0, a1) (kV)	3
Rated impulse withstand voltage over the setting range (a) (kV)	45
Rated short-duration power-frequency withstand voltage over the settings range (a) (kV)	15

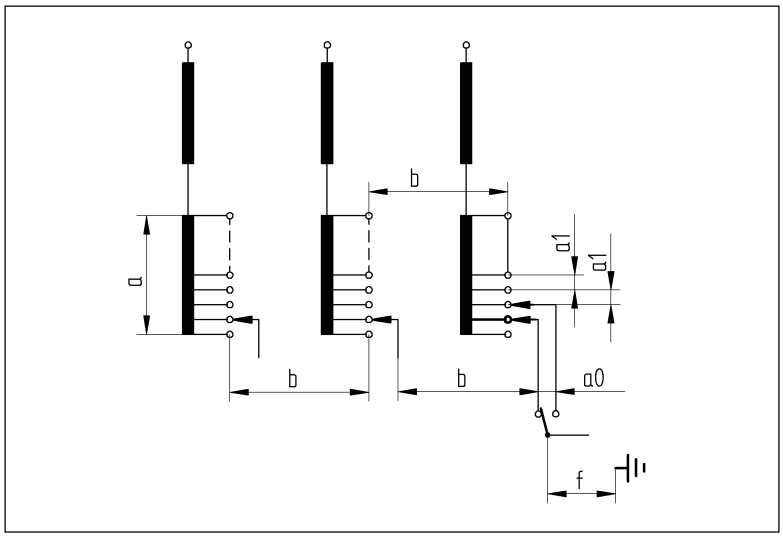

Fig. 28: Insulation distances

14.2 General technical data

Housing dimensions	(w x h x d) = 1750 x 1612 x 460 mm
Weight	350 kg
On-load tap-changer design according to	ICE 60214-1 and GB 10230

14.3 Technical data for the drive unit

Drive (integrated in on-load tap-changer housing) Power motor (kW) Power control (kW)	 0.25 0.1 / 0.03
Voltage (V)	3 ACN 220 / 380
Rated current (A)	1.55 / 0.9
Frequency (Hz)	50

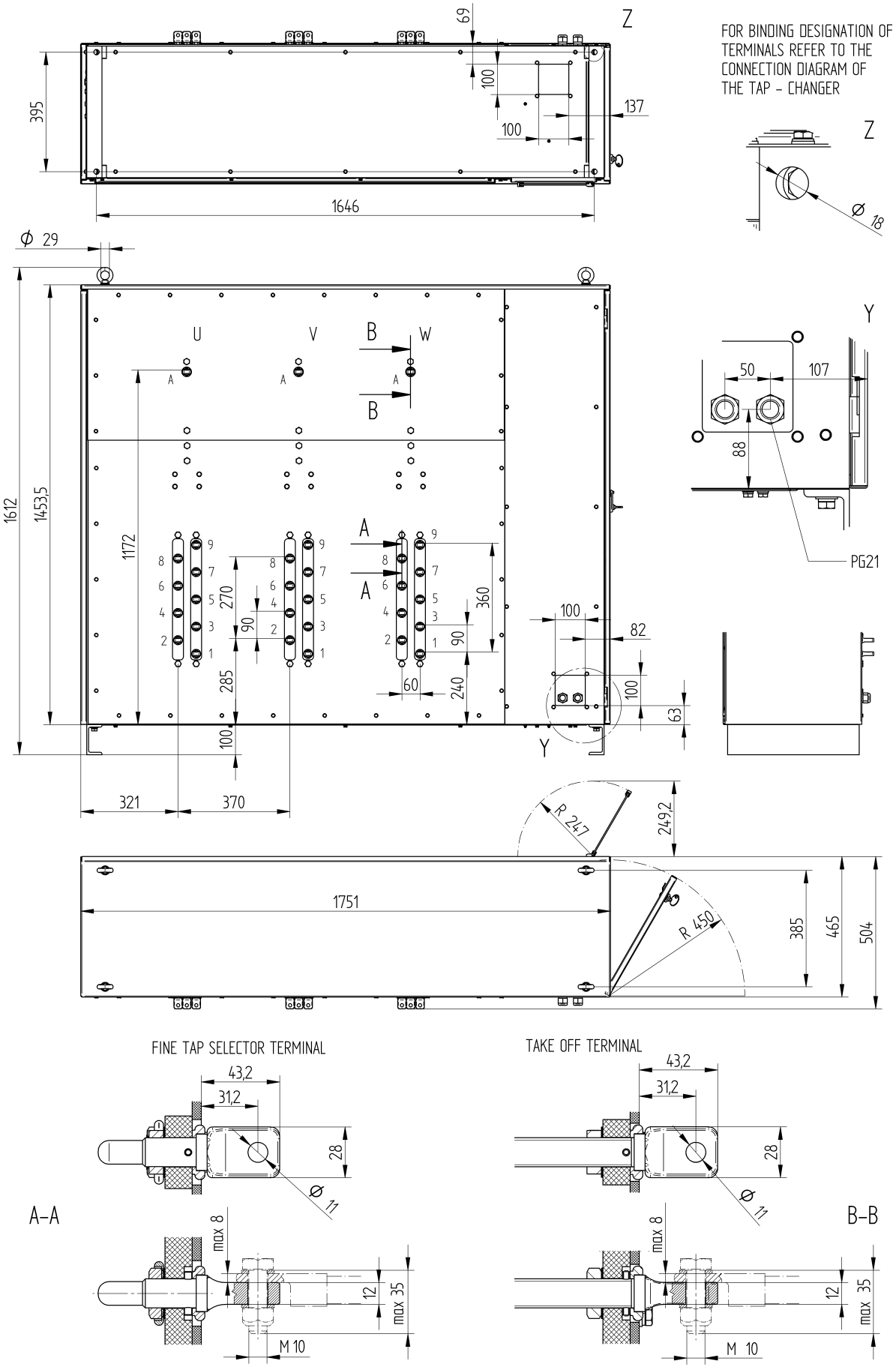
FOR BINDING DESIGNATION OF TERMINALS REFER TO THE CONNECTION DIAGRAM OF THE TAP - CHANGER
Z
Y
U
V
W
A
B
PG21
FINE TAP SELECTOR TERMINAL
TAKE OFF TERMINAL
A-A
B-B
max 8
max 35
M 10

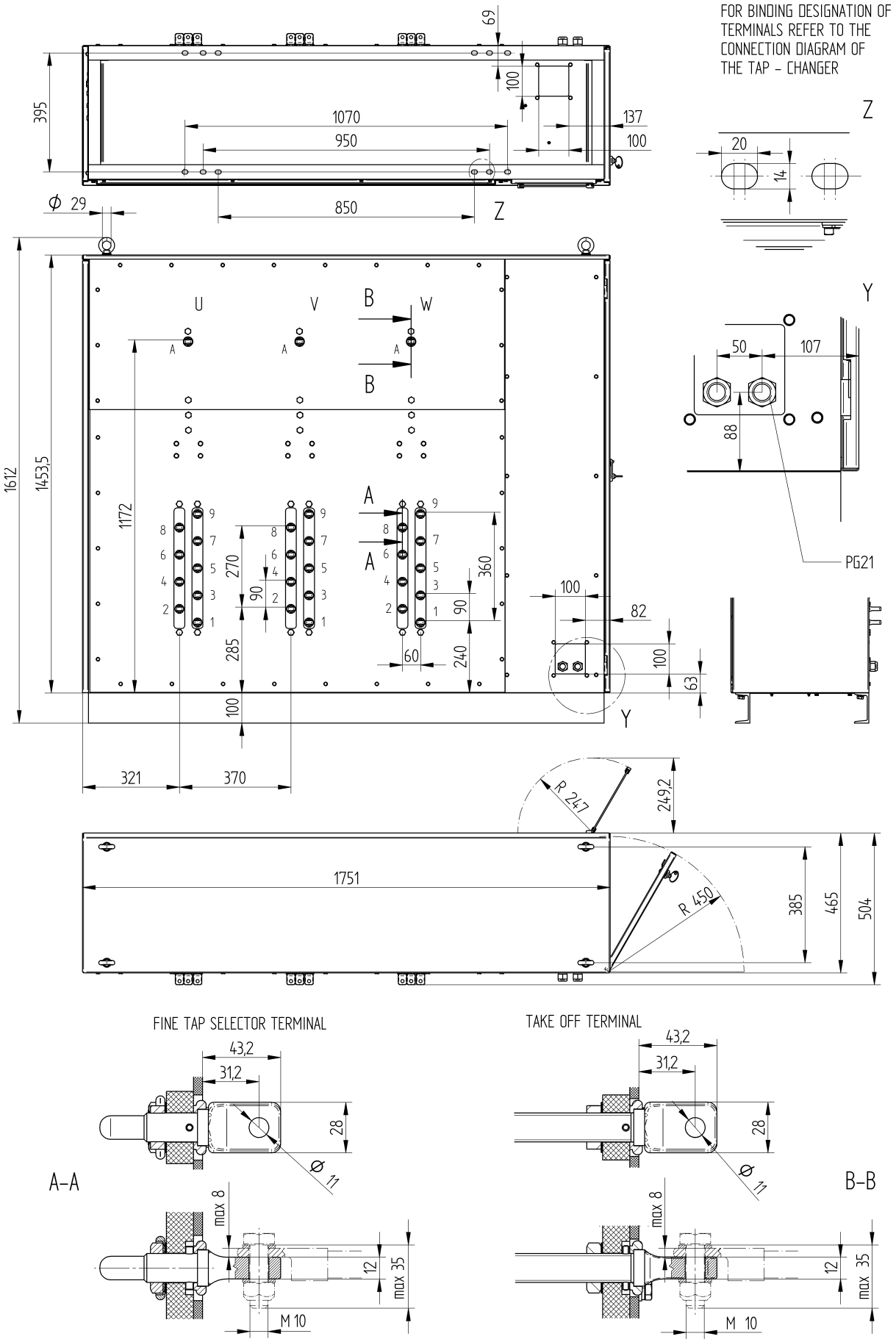
FOR BINDING DESIGNATION OF TERMINALS REFER TO THE CONNECTION DIAGRAM OF THE TAP - CHANGER
FINE TAP SELECTOR TERMINAL
TAKE OFF TERMINAL
A-A
B-B
PG21
1612
1453,5
1172
1751
R 247
R 450
249,2
385
465
504
321
370
1070
950
850
395
137
100
69
20
14
50
107
88
82
63
270
90
285
360
240
60
max 8
max 35
M 10
12
28
31,2
43,2
Ø 11
Ø 29

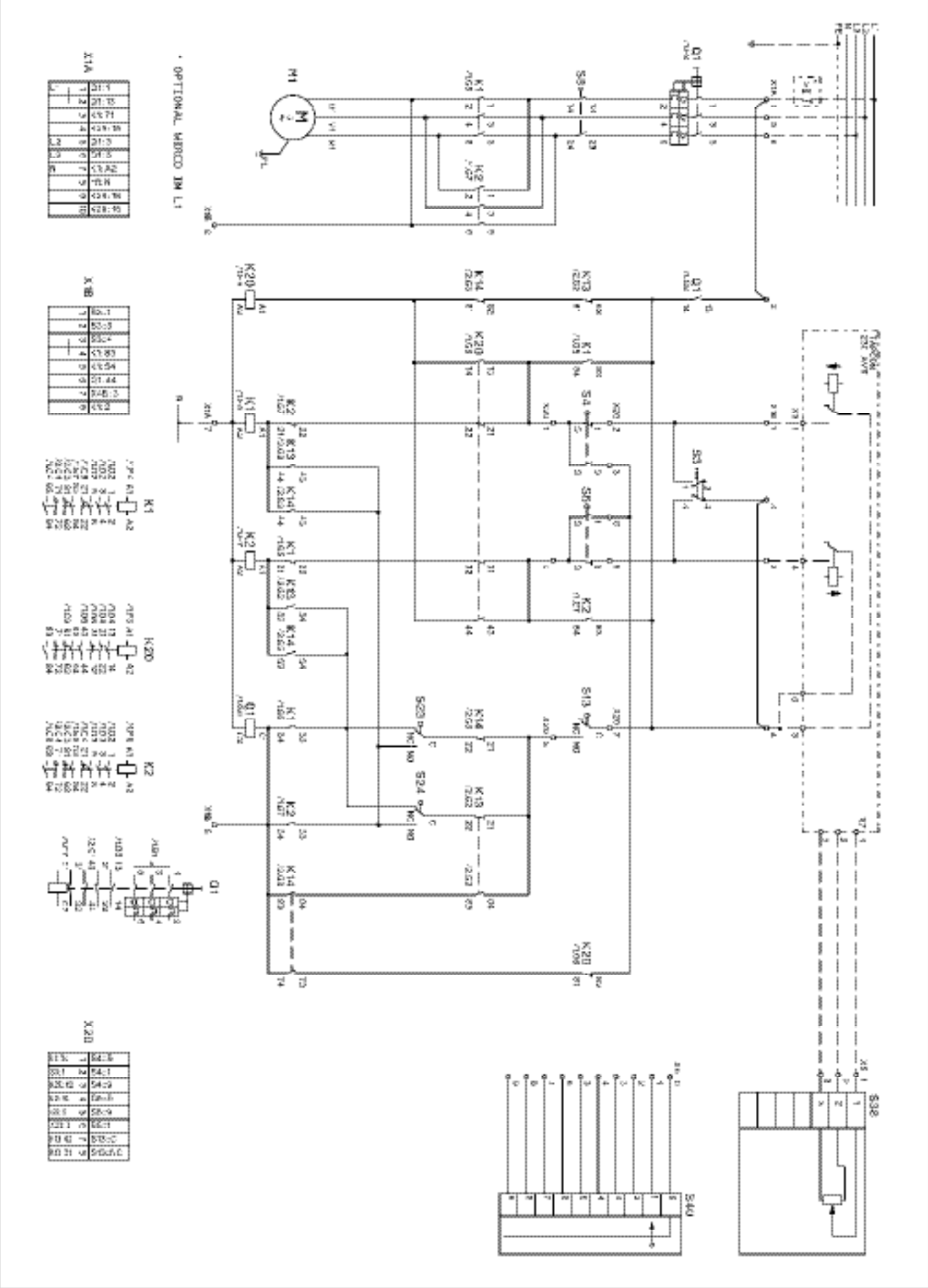

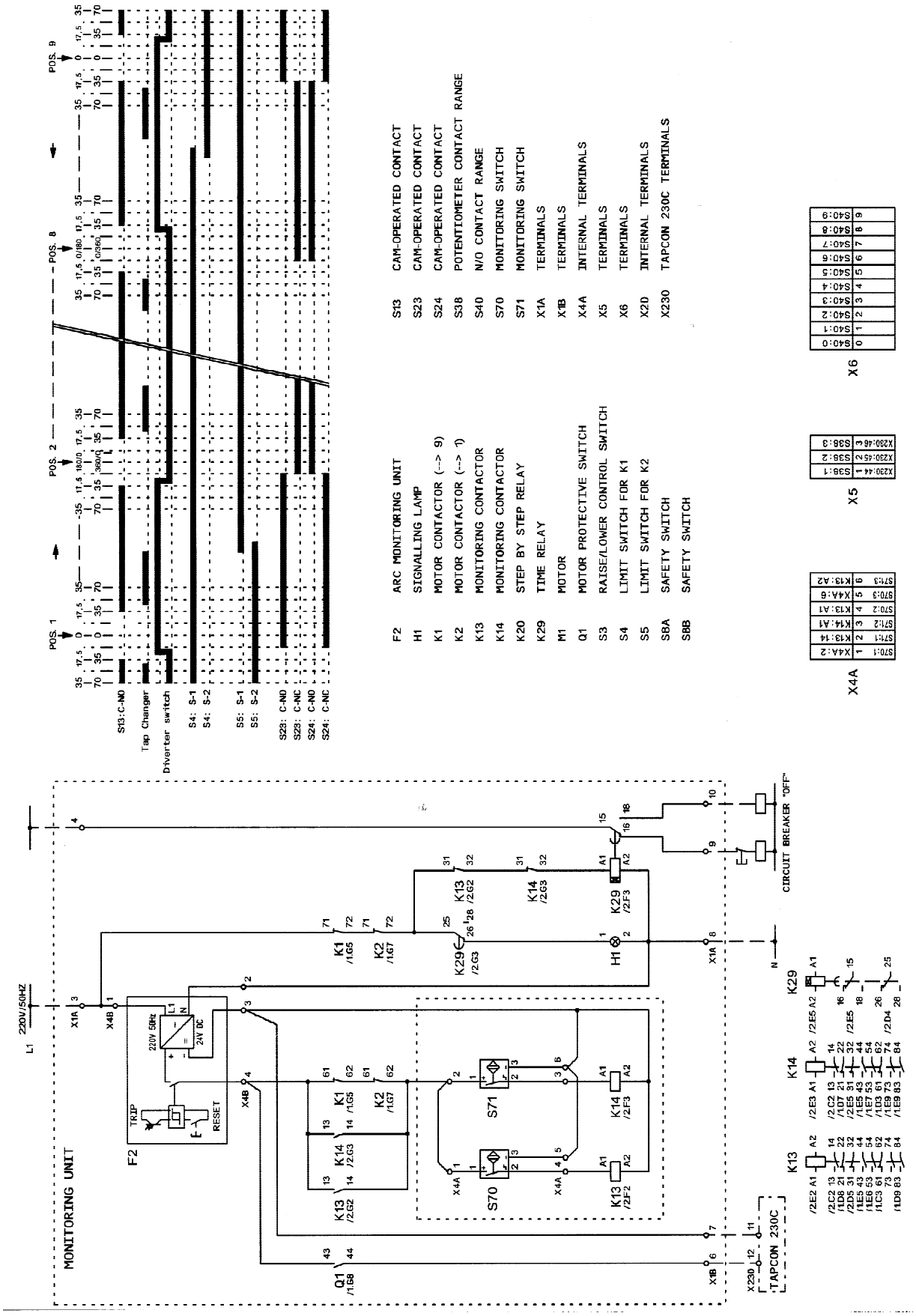
POS. 1
POS. 2
POS. 8
POS. 9
S13:C-NO
Tap Changer
Diverter switch
S4: S-1
S4: S-2
S5: S-1
S5: S-2
S23: C-NO
S23: C-NC
S24: C-NO
S24: C-NC
F2 ARC MONITORING UNIT
H1 SIGNALLING LAMP
K1 MOTOR CONTACTOR (--> 9)
K2 MOTOR CONTACTOR (--> 1)
K13 MONITORING CONTACTOR
K14 MONITORING CONTACTOR
K20 STEP BY STEP RELAY
K29 TIME RELAY
M1 MOTOR
Q1 MOTOR PROTECTIVE SWITCH
S3 RAISE/LOWER CONTROL SWITCH
S4 LIMIT SWITCH FOR K1
S5 LIMIT SWITCH FOR K2
S8A SAFETY SWITCH
S8B SAFETY SWITCH
S13 CAM-OPERATED CONTACT
S23 CAM-OPERATED CONTACT
S24 CAM-OPERATED CONTACT
S38 POTENTIOMETER CONTACT RANGE
S40 N/O CONTACT RANGE
S70 MONITORING SWITCH
S71 MONITORING SWITCH
X1A TERMINALS
X1B TERMINALS
X4A INTERNAL TERMINALS
X5 TERMINALS
X6 TERMINALS
X2D INTERNAL TERMINALS
X230 TAPCON 230C TERMINALS
X6
X5
X4A
MONITORING UNIT
220V/50HZ
L1
N
CIRCUIT BREAKER "OFF"
TAPCON 230C
TRIP
RESET
220V 50Hz
24V DC
K1 /1G5
K2 /1G7
K13 /2G2
K14 /2G3
K29 /2G3
K29 /2F3
K14 /2F3
K13 /2F2
S70
S71
H1
Q1 /1G8

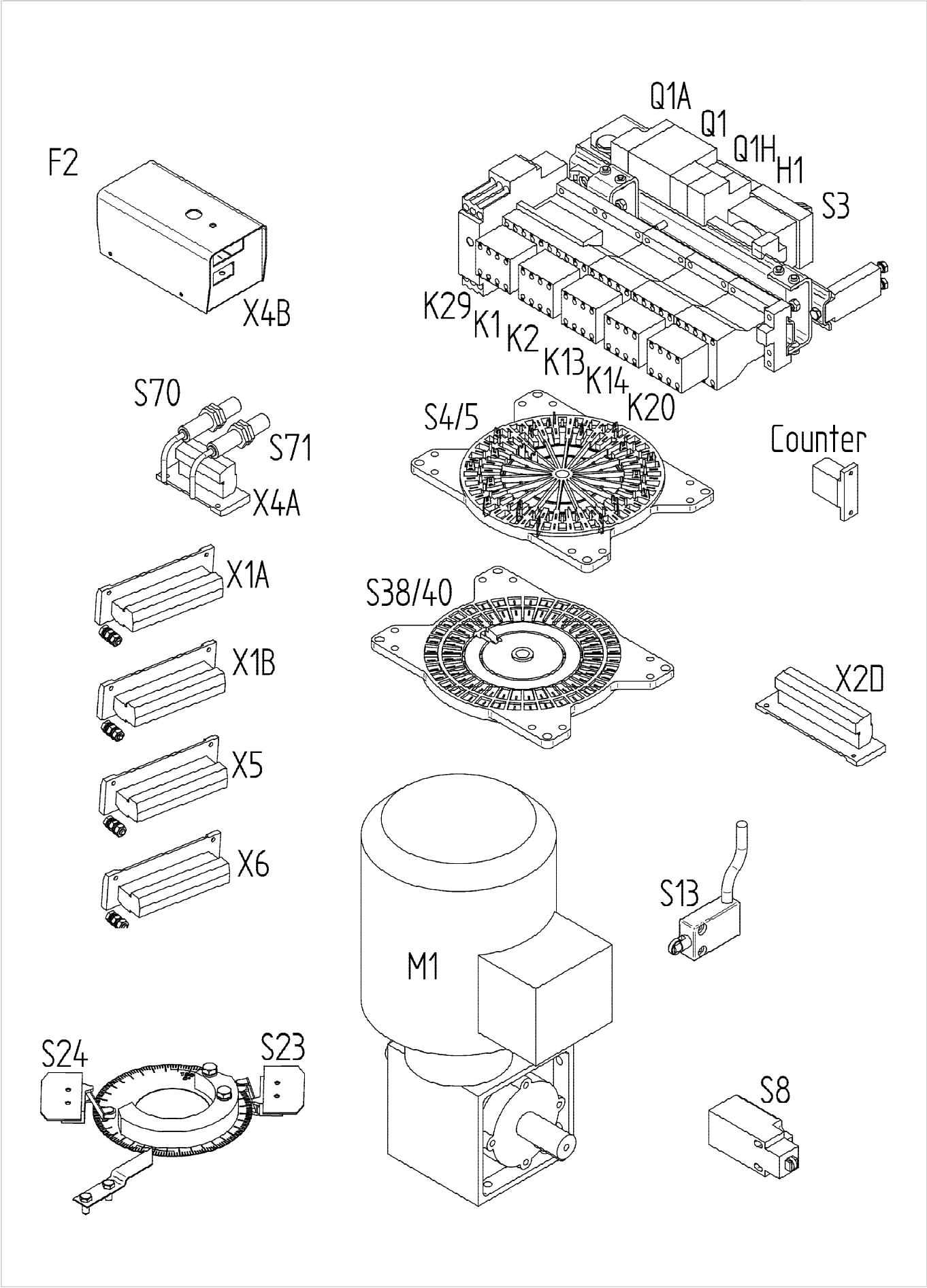
Q1A
Q1
Q1H
H1
S3
F2
X4B
K29
K1
K2
K13
K14
K20
S70
S71
X4A
S4/5
Counter
X1A
S38/40
X1B
X2D
X5
X6
S13
M1
S24
S23
S8

AVT- SCHEMATIC DIAGRAM

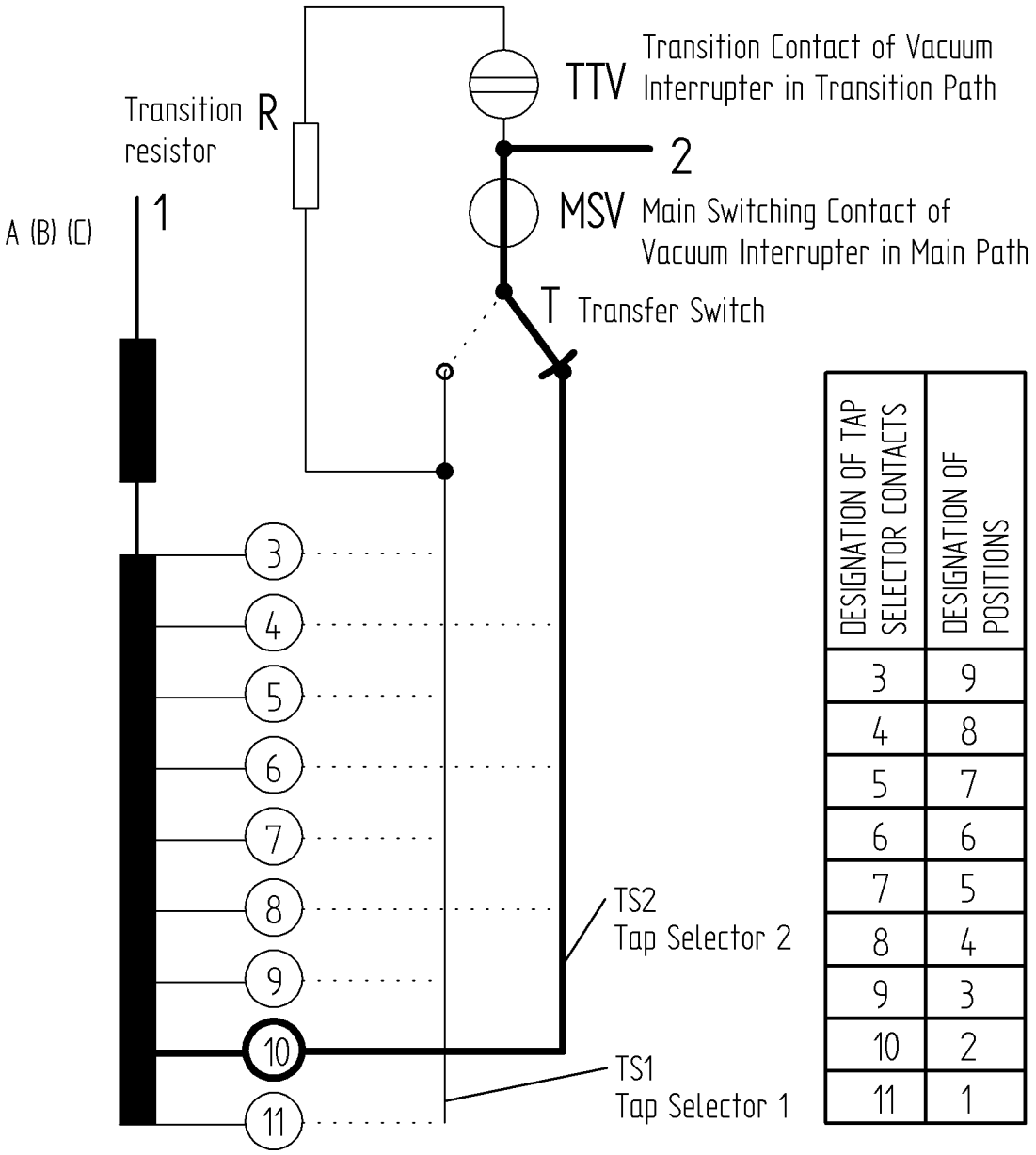

DESIGNATION OF TAP SELECTOR CONTACTS	DESIGNATION OF POSITIONS
3	9
4	8
5	7
6	6
7	5
8	4
9	3
10	2
11	1

www.reinhausen.com

©Maschinenfabrik Reinhausen GmbH
Falkensteinstraße 8
93059 Regensburg, Germany

Phone +49 (0)941 4090 0
Fax +49 (0)941 4090 111
E-mail sales@reinhausen.com